AUTHENTICATED
U.S. GOVERNMENT
INFORMATION
GPO

FIGURES TO PART 1194

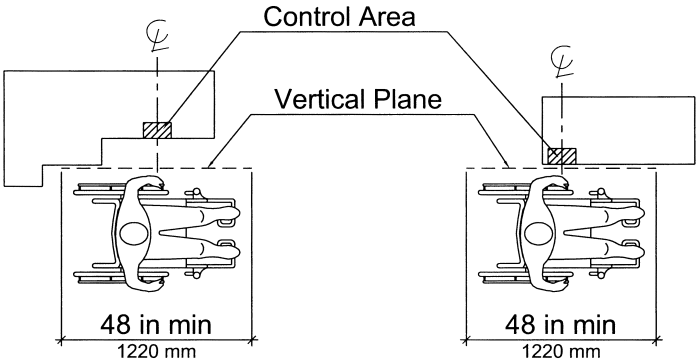

Vertical Plane Relative to the Operable Control

Figure 1

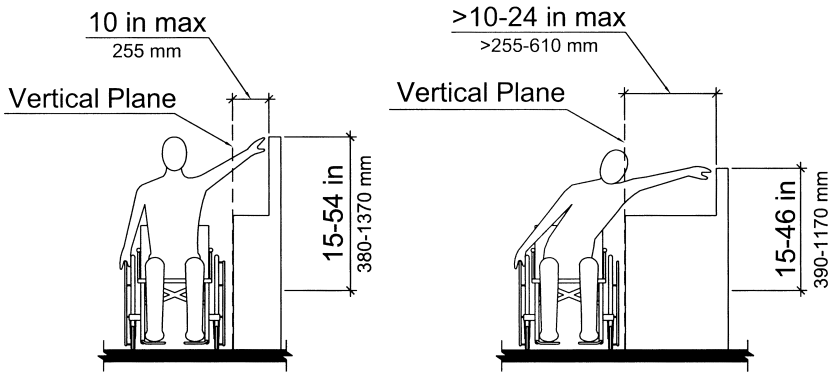

Height of Operable Control Relative to the Vertical Plane

Figure 2

PARTS 1195–1199 [RESERVED]

CHAPTER XII—NATIONAL ARCHIVES AND RECORDS ADMINISTRATION

SUBCHAPTER A—GENERAL RULES

Part		*Page*
1200	Official seals	509
1202	Regulations implementing the Privacy Act of 1974	510
1206	National Historical Publications and Records Commission	521
1207	Uniform administrative requirements for grants and cooperative agreements to state and local governments	537
1208	Enforcement of nondiscrimination on the basis of handicap in programs or activities conducted by the National Archives and Records Administration	564
1209	Governmentwide debarment and suspension (nonprocurement) and governmentwide requirements for drug-free workplace (grants)	570
1210	Uniform administrative requirements for grants and agreements with institutions of higher education, hospitals, and other non–profit organizations	589
1211	Nondiscrimination on the basis of sex in education programs or activities receiving federal financial assistance	614

SUBCHAPTER B—RECORDS MANAGEMENT

1220	Federal records; general	636
1222	Creation and maintenance of Federal records	643
1228	Disposition of Federal records	649
1230	Micrographic records management	697
1232	Audiovisual records management	706
1234	Electronic records management	710
1236	Management of vital records	717

Part		Page
1238	Program assistance	720
	SUBCHAPTER C—PUBLIC AVAILABILITY AND USE	
1250	Public availability and use of Federal Records	721
1252	Public use of records, donated historical materials, and facilities; general	731
1253	Location of records and hours of use	732
1254	Availability of records and donated historical materials	735
1256	Restrictions on the use of records	755
1258	Fees	761
	SUBCHAPTER D—DECLASSIFICATION	
1260	Declassification of national security information	765
	SUBCHAPTER E—PRESIDENTIAL RECORDS	
1270	Presidential records	771
	SUBCHAPTER F—NIXON PRESIDENTIAL MATERIALS	
1275	Preservation and protection of and access to the Presidential historical materials of the Nixon Administration	776
	SUBCHAPTER G—NARA FACILITIES	
1280	Public use of NARA facilities	793
1284	Exhibits	802
	SUBCHAPTER H—JFK ASSASSINATION RECORDS	
1290	Guidance for interpretation and implementation of the President John F. Kennedy Assassination Records Collection Act of 1992 (JFK Act)	804
1291–1299	[Reserved]	

SUBCHAPTER A—GENERAL RULES

PART 1200—OFFICIAL SEALS

Sec.
1200.1 Definitions.
1200.2 Description and design.
1200.4 Authority to affix seals.
1200.6 Use of the seals.

AUTHORITY: 44 U.S.C. 2104(e), 2116(b), 2302.

SOURCE: 50 FR 27196, July 1, 1985, unless otherwise noted.

§ 1200.1 Definitions.

For the purposes of this part—

Embossing seal means a display of the form and content of the official seal made on a die so that the seal can be embossed on paper or other medium.

NARA means all organizational units of the National Archives and Records Administration.

Official seal means the original(s) of the seal showing the exact form, content and color.

Replica or *reproduction* means a copy of the official seal displaying the form, content and color.

§ 1200.2 Description and design.

(a) *National Archives and Records Administration seal.* The design is illustrated below and described as follows:

Centered on a disc with a double-line border a solid line rendition of an heraldic eagle displayed holding in its left talon thirteen arrows, in its right talon a branch of olive, bearing on its breast a representation of the shield of the United States and displayed above its head a partially unrolled scroll inscribed with the words LITTERA SCRIPTA MANET one above the other; all within the circumscription NATIONAL ARCHIVES AND RECORDS ADMINISTRATION, with the date 1985 at bottom center.

(b) *National Archives seal.* The design is illustrated below and described as in paragraph (a) of this section, encircled by the circumscription THE NATIONAL ARCHIVES OF THE UNITED STATES, with the date 1934 at the bottom center.

(c) *National Archives Trust Fund Board seal.* The design is illustrated below and described as in paragraph (a) of

this section, encircled by the circumscription NATIONAL ARCHIVES TRUST FUND BOARD, with the date 1941 at the bottom center.

§ 1200.4 Authority to affix seals.

The Archivist of the United States and the Archivist's designees are authorized to affix the official seals, embossing seals, replicas and reproductions to appropriate documents, certifications and other material for all purposes authorized by this part.

§ 1200.6 Use of the seals.

(a) The seals are the official emblems of NARA and their use is therefore permitted only as provided in this part.

(b) Use by any person or organization outside NARA may be made only with prior written approval by NARA.

(c) Requests by any person or organization outside NARA for permission to use the seals must be made in writing to the Archivist of the United States, National Archives (N), Washington, DC 20408, and must specify, in detail, the exact use to be made. Any permission granted applies only to the specific use for which it was granted and is not to be construed as permission for any other use.

(d) Use of the NARA and the National Archives of the United States seals shall be primarily for informational purposes and for authentication of documents. The National Archives Trust Fund Board seal shall be used only for Trust Fund documents and publications. The seals may not be used on any article or in any manner which may discredit the seals or reflect unfavorably upon NARA or which implies NARA endorsement of commercial products or services, or of the user's policies or activities.

(e) Falsely making, forging, counterfeiting, mutilating, or altering the official seals, replicas, reproductions or embossing seals, or knowingly using or possessing with fraudulent intent any altered seal is punishable under section 506 of title 18, United States Code.

(f) Any person using the official seals, replicas, reproductions, or embossing seals in a manner inconsistent with the provisions of this part is subject to the provisions of 18 U.S.C. 1017, which provides penalties for the wrongful use of an official seal, and to other provisions of law as applicable.

PART 1202—REGULATIONS IMPLEMENTING THE PRIVACY ACT OF 1974

Subpart A—General Information About the Privacy Act

Sec.
1202.1 What does this part cover?
1202.2 What this part does not cover.
1202.4 Definitions.
1202.6 Whom should I contact for Privacy Act matters at NARA?
1202.8 How does NARA handle records that are in Government-wide Privacy Act systems?
1202.10 Does NARA handle access to and disclosure of records of defunct agencies in the custody of NARA?

Subpart B—Collecting Information

1202.18 How does NARA collect information about individuals?
1202.20 What advisory information does NARA provide before collecting information from me?
1202.22 Will NARA need my Social Security Number?
1202.24 Will NARA ever request information about me from someone else?
1202.26 Who will make sure that my record is accurate?
1202.28 What rules do NARA employees follow in managing personal information?
1202.30 How does NARA safeguard its systems of records?

Subpart C—Individual Access to Records

1202.40 How can I gain access to NARA records about myself?
1202.42 How are requests for access to medical records handled?
1202.44 How long will it take for NARA to process my request?
1202.46 In what ways will NARA provide access?
1202.48 Will I have to pay for copies of records?
1202.50 Does NARA require prepayment of fees?
1202.52 How do I pay?
1202.54 On what grounds can NARA deny my Privacy Act request?
1202.56 How do I appeal a denial of my Privacy Act request?
1202.58 How are appeals processed?

Subpart D—Disclosure of Records

1202.60 When does NARA disclose a record in a Privacy Act system of records?
1202.62 What are the procedures for disclosure of records to a third party?
1202.64 How do I appeal a denial of disclosure?
1202.66 How does NARA keep account of disclosures?

Subpart E—Request to Amend Records

1202.70 Whom should I contact at NARA to amend records about myself?
1202.72 How does NARA handle requests to amend records?
1202.74 How will I know if NARA approved my amendment request?
1202.76 Can NARA deny my request for amendment?
1202.78 How do I accept an alternative amendment?
1202.80 How do I appeal the denial of a request to amend a record?
1202.82 How do I file a Statement of Disagreement?
1202.84 Can I seek judicial review?

Subpart F—Exemptions

1202.90 What NARA systems of records are exempt from release under the National Security Exemption of the Privacy Act?
1202.92 What NARA systems of records are exempt from release under the Law Enforcement Exemption of the Privacy Act?
1202.94 What NARA systems of records are exempt from release under the Investigatory Information Material Exemption of the Privacy Act?

AUTHORITY: 5 U.S.C. 552a; 44 U.S.C. 2104(a).

SOURCE: 66 FR 65652, Dec. 20, 2001, unless otherwise noted.

Subpart A—General Information About the Privacy Act

§ 1202.1 What does this part cover?

(a) This part covers requests under the Privacy Act (5 U.S.C. 552a) for NARA operational records and records of defunct agencies stored in NARA record centers.

(b) This part explains how NARA collects, uses and maintains records about you that are filed by your name or other personal identifiers and which are contained in a ''system of records'' as defined by 5 U.S.C. 552a(a)(5).

(c) This part describes the procedures to gain access to and contest the contents of your records, and the conditions under which NARA discloses such records to others.

§ 1202.2 What this part does not cover.

This part does not cover:

(a) Records that have been transferred into the National Archives of the United States for permanent preservation. Archival records that are contained in systems of records that become part of the National Archives of the United States are exempt from most provisions of the Privacy Act (see 5 U.S.C. 552a(l)(2) and (l)(3)). See subchapter C of this chapter for rules governing access to these type records.

(b) Records of other agencies that are stored in NARA record centers on behalf of that agency are governed by the Privacy Act rules of the transferring agency. Send your request for those records directly to those agencies.

(c) Personnel and medical records held by the National Personnel Records Center (NPRC) on behalf of the Department of Defense and the Office of Personnel Management. Privacy Act requests for these records should come to the NPRC.

§ 1202.4 Definitions.

For the purposes of this part, the term:

(a) *Access* means a transfer of a record, a copy of a record, or the information in a record to the subject individual, or the review of a record by the subject individual.

(b) *Agency* means any executive department, military department, Government corporation, Government-controlled corporation, or other establishment in the executive branch of the Government (including the Executive Office of the President), or any independent regulatory agency.

(c) *Defunct agency* means an agency that has ceased to exist, and has no successor in function.

(d) *Defunct agency* records means the records in a Privacy Act system of a defunct agency that are stored in a NARA records center.

(e) *Disclosure* means a transfer by any means of a record, a copy of a record, or the information contained in a record to a recipient other than the subject individual, or the review of a record by someone other than the subject individual.

(f) *Individual* means a citizen of the United States or an alien lawfully admitted for permanent residence.

(g) *Maintain* includes maintain, collect, use, or disseminate.

(h) *NARA Privacy Act Appeal Official* means the Deputy Archivist of the United States for appeals of denials of access to or amendment of records maintained in a system of records, except where the system manager is the Inspector General; then the term means the Archivist of the United States.

(i) *Record* means any item, collection, or grouping of information about an individual that is maintained by an agency, including, but not limited to, his or her education, financial transactions, medical history and criminal or employment history, and that contains his or her name or an identifying number, symbol, or other identifying particular assigned to the individual, such as a fingerprint, voiceprint, or photograph. For purposes of this part, ''record'' does not mean archival records that have been transferred to the National Archives of the United States.

(j) *Routine use* means, with respect to the disclosure of a record, the use of that record for a purpose which is compatible with the purpose for which it was collected.

(k) *Solicitation* means a request by a NARA employee or contractor that an individual provide information about himself or herself.

(l) *Statistical record* means a record in a system of records maintained for statistical research or reporting purposes only and not used in whole or in part in making any determination about an identifiable individual, except as provided by 13 U.S.C. 8.

(m) *Subject individual* means the individual named or discussed in a record or the individual to whom a record otherwise pertains.

(n) *System manager* means the NARA employee who is responsible for the maintenance of a system of records and for the collection, use, and dissemination of information in that system of records.

(o) *System of records* means a group of records from which information is retrieved by the name of the individual or by some identifying number, symbol, or other identifier assigned to that individual.

§ 1202.6 Whom should I contact for Privacy Act matters at NARA?

Contact the NARA Privacy Act Officer, National Archives and Records Administration (NGC), Room 3110, 8601 Adelphi Road, College Park, MD 20740–6001, for guidance in making a Privacy Act request, or if you need assistance with an existing request. The Privacy Act Officer will refer you to the responsible system manager. Details about what to include in your Privacy Act request are discussed in Subpart C of this part.

§ 1202.8 How does NARA handle records that are in Government-wide Privacy Act systems?

Records in the custody of NARA in a Government-wide Privacy Act system are the primary responsibility of another agency, e.g., the Office of Personnel Management (OPM) or the Office of Government Ethics (OGE). These records are governed by the regulations established by that agency pursuant to the Privacy Act. NARA provides access using that agency's regulations.

§ 1202.10 Does NARA handle access to and disclosure of records of defunct agencies in the custody of NARA?

Yes, records of defunct agencies in the custody of NARA at a NARA record center are covered by the provisions of this part.

Subpart B—Collecting Information

§ 1202.18 How does NARA collect information about individuals?

Any information that is used in making a determination about your rights, benefits, or privileges under NARA programs is collected directly from you—the subject individual— to the greatest extent possible.

§ 1202.20 What advisory information does NARA provide before collecting information from me?

(a) Before collecting information from you, NARA will advise you of:

(1) The authority for collecting the information and whether providing the information is mandatory or voluntary;

(2) The purpose for which the information will be used;

(3) The routine uses of the information; and

(4) The effect on you, if any, of not providing the information.

(b) NARA ensures that forms used to record the information that you provide are in compliance with the Privacy Act and this part.

§ 1202.22 Will NARA need my Social Security Number?

(a) Before a NARA employee or NARA contractor asks you to provide your social security number (SSN), he or she will ensure that the disclosure is required by Federal law or under a Federal law or regulation adopted before January 1, 1975.

(b) If you are asked to provide your SSN, the NARA employee or contractor must first inform you:

(1) Whether the disclosure is mandatory or voluntary;

(2) The statute or authority under which your SSN is solicited; and

(3) How your SSN will be used.

§ 1202.24 Will NARA ever request information about me from someone else?

NARA will make every effort to gather information from you directly. When NARA solicits information about you from someone else, NARA will explain to that person the purpose for which the information will be used.

§ 1202.26 Who will make sure that my record is accurate?

The system manager ensures that all records used by NARA to make a determination about any individual are maintained with such accuracy, relevancy, timeliness, and completeness as is reasonably possible to ensure fairness to you.

§ 1202.28 What rules do NARA employees follow in managing personal information?

All NARA employees and contractors involved in the design, development, operation or maintenance of any system of records must review the provisions of the Privacy Act and the regulations in this part. NARA employees and contractors must conduct themselves in accordance with the rules of conduct concerning the protection of nonpublic information in the Standards of Ethical Conduct for Employees of the Executive Branch, 5 CFR 2635.703.

§ 1202.30 How does NARA safeguard its systems of records?

(a) The system manager ensures that appropriate administrative, technical, and physical safeguards are established to ensure the security and confidentiality of records. In order to protect against any threats or hazards to their security or loss of integrity, paper records are maintained in areas accessible only to authorized NARA personnel. Electronic records are protected in accordance with the Computer Security Act, OMB Circular A–11 requiring privacy analysis in reporting to OMB, and are accessed via passwords from terminals located in attended offices. After hours, buildings have security guards and/or doors are secured and all entrances are monitored by electronic surveillance equipment.

(b) The system manager, at his/her discretion, may designate additional safeguards similar to or greater than those described in paragraph (a) of this section for unusually sensitive records.

(c) The system manager only permits access to and use of automated or manual personnel records to persons whose official duties require such access, or to you or to a representative designated by you.

Subpart C—Individual Access to Records

§ 1202.40 How can I gain access to NARA records about myself?

(a) If you wish to request access to information about yourself contained in a NARA Privacy Act system of records, you must notify the NARA Privacy Act Officer, National Archives and Records Administration, Rm. 3110, 8601 Adelphi Rd., College Park, MD 20740–6001. If you wish to allow another person to review or obtain a copy of your record, you must provide authorization for that person to obtain access as part of your request.

(b) Your request must be in writing and the letter and the envelope must be marked ''Privacy Act Request.'' Your request letter must contain:

(1) The complete name and identifying number of the NARA system as published in the FEDERAL REGISTER;

(2) A brief description of the nature, time, place, and circumstances of your association with NARA;

(3) Any other information, which you believe, would help NARA to determine whether the information about you is included in the system of records;

(4) If you are authorizing another individual to have access to your records, the name of that person; and

(5) A Privacy Act certification of identity. When you make a request for access to records about yourself, you must verify your identity. You must sign your request and your signature must either be notarized or submitted by you under 28 U.S.C. 1746, a law that permits statements to be made under penalty of perjury as a substitute for notarization. While no specific form is required, you may obtain a Certification of Identity form for this purpose from the NARA Privacy Act Officer. The following information is required:

(i) Your full name;

(ii) An acknowledgment that you understand the criminal penalty in the Privacy Act for requesting or obtaining access to records under false pretenses (5 U.S.C. 552a(i)(3)); and

(iii) A declaration that your statement is true and correct under penalty of perjury (18 U.S.C. 1001).

(c) The procedure for accessing an accounting of disclosure is identical to the procedure for access to a record as set forth in this section.

§ 1202.42 How are requests for access to medical records handled?

When NARA receives a request for access to medical records, if NARA believes that disclosure of medical and/or psychological information directly to you could have an adverse effect on you, you may be asked to designate in writing a physician or mental health professional to whom you would like the records to be disclosed, and disclosure that otherwise would be made to you will instead be made to the designated physician or mental health professional.

§ 1202.44 How long will it take for NARA to process my request?

(a) NARA will acknowledge your request within 10 workdays of its receipt by NARA and if possible, will make the records available to you at that time. If NARA cannot make the records immediately available, the acknowledgment will indicate when the system manager will make the records available.

(b) If NARA anticipates more than a 10 workday delay in making a record you requested available, NARA also will explain in the acknowledgment specific reasons for the delay.

(c) If your request for access does not contain sufficient information to permit the system manager to locate the records, NARA will request additional information from you. NARA will have 10 workdays following receipt of the additional information in which to make the records available or to acknowledge receipt of the request and to indicate when the records will be available.

§ 1202.46 In what ways will NARA provide access?

(a) At your request, NARA will provide you, or a person authorized by you, a copy of the records by mail or by making the records available in person during normal business hours at the NARA facility where the records are located. If you are seeking access in person, the system manager will permit you to examine the original record, will provide you with a copy of the records, or both.

(b) When obtaining access to the records in person at a NARA facility, you must provide proof of identification either by producing at least one piece of identification bearing a name or signature and either a photograph or physical description (e.g., a driver's license or employee identification card) or by signing the Certification of Identity form described in § 1204.40 (b)(5). NARA reserves the right to ask you to produce additional pieces of identification to assure NARA of your identity. You will also be asked to sign an acknowledgement that you have been given access.

§ 1202.48 Will I have to pay for copies of records?

Yes. However NARA will waive fees for the first 100 pages copied or when the cost to collect the fee will exceed the amount collected. When a fee is charged, the charge per copy is $0.20 per page if NARA makes the copy or $0.15 per page if you make the copy on a NARA self-service copier. Fees for other reproduction processes are computed upon request.

§ 1202.50 Does NARA require prepayment of fees?

If the system manager determines that the estimated total fee is likely to exceed $250, NARA will notify you that the estimated fee must be prepaid before you can have copies of the records. If the final fee is less than the amount you prepaid, NARA will refund the difference.

§ 1202.52 How do I pay?

You must pay by check or money order. Make your check or money order payable to the National Archives and Records Administration and send it to the NARA Privacy Act Officer, Room 3110, 8601 Adelphi Road, College Park, MD 20740–6001.

§ 1202.54 On what grounds can NARA deny my Privacy Act request?

(a) NARA can deny your Privacy Act request for records if the records are maintained in an exempt systems of records are described in subpart F of this part.

(b) A system manager may deny your request for access to your records only if:

(1) NARA has published rules in the FEDERAL REGISTER exempting the pertinent system of records from the access requirement; and

(2) The record is exempt from disclosure under the Freedom of Information Act (FOIA).

(c) Upon receipt of a request for access to a record which is contained within an exempt system of records, NARA will:

(1) Review the record to determine whether all or part of the record must be released to you in accordance with § 1202.40, notwithstanding the inclusion of the record within an exempt system of records; and

(2) Provide access to the record (or part of the record, if it is not fully releasable) in accordance with § 1202.46 or notify you that the request has been denied in whole or in part.

(d) If your request is denied in whole or in part, NARA's notice will include a statement specifying the applicable Privacy Act and FOIA exemptions and advising you of the right to appeal the decision as explained in § 1202.56.

§ 1202.56 How do I appeal a denial of my Privacy Act request?

(a) If you are denied access in whole or in part to records pertaining to yourself, you may file with NARA an appeal of that denial. Your appeal letter must be post marked no later than 35 calendar days after the date of the denial letter from NARA.

(1) Address appeals involving denial of access to Office of Inspector General records to NARA Privacy Act Appeal Official (N), National Archives and Records Administration, Room 4200, 8601 Adelphi Road, College Park, MD 20740–6001.

(2) Address all other appeals to the NARA Privacy Act Appeal Official (ND), National Archives and Records Administration, Room 4200, 8601 Adelphi Road, College Park, MD 20740–6001.

(b) All appeals of denial of access to the NARA Privacy Act Appeal Official must be in writing. Mark both the envelope and the appeal ''Privacy Act '' Access Appeal.''

§ 1202.58 How are appeals processed?

(a) Upon receipt of your appeal, the NARA Privacy Act Appeal Official will consult with the system manager, legal counsel, and such other officials as may be appropriate. If the NARA Privacy Act Appeal Official determines that the records you requested are not exempt from release, NARA grants you access and so notifies you.

(b) If the NARA Privacy Act Appeal Official determines that your appeal must be rejected, NARA will immediately notify you in writing of that determination. This decision is final and cannot be appealed further within NARA. NARA's notification to you will include:

(1) The reason for the rejection of the appeal; and

(2) Notice of your right to seek judicial review of NARA's final determination, as described in 36 CFR 1202.84.

(c) NARA will make its final determination no later than 30 workdays from the date on which NARA receives your appeal. NARA may extend this time limit by notifying you in writing before the expiration of the 30 workdays. This notification will include an explanation of the reasons for the time extension.

Subpart D—Disclosure of Records

§ 1202.60 When does NARA disclose a record in a Privacy Act system of records?

NARA will not disclose any records in a Privacy Act system of records to any person or to another agency without the express written consent of the subject individual unless the disclosure is:

(a) To NARA employees who have a need for the information in the official performance of their duties;

(b) Required by the provisions of the Freedom of Information Act, as amended;

(c) For a routine use that has been published in a notice in the FEDERAL REGISTER;

(d) To the Bureau of Census for purposes of planning or carrying out a census or survey or related activity pursuant to title 13 U.S.C.;

(e) To a person who has provided NARA with advance adequate written assurance as specified in § 1202.62(a) that the record will be used solely as a statistical research or reporting record. (Personal identifying information is deleted from the record released for statistical purposes. The system manager ensures that the identity of the individual cannot reasonably be deduced by combining various statistical records.)

(f) To the National Archives of the United States as a record which has sufficient historical or other value to warrant its continued preservation by the United States Government or for evaluation by the Archivist or the designee of the Archivist to determine whether the record has such value;

(g) To another agency or any governmental jurisdiction within or under the control of the United States for a civil or criminal law enforcement activity if the activity is authorized by law, and if the head of the agency or his or her other designated representative has made a written request to NARA specifying the particular portion desired and the law enforcement activity for which the record is sought;

(h) To a person showing compelling circumstances affecting the health or safety of an individual, and not necessarily the individual to whom the record pertains. A disclosure of this nature is followed by a notification to the last known address of the subject individual;

(i) To either House of Congress or to a committee or subcommittee (joint or of either House), in the course of the performance of official legislative activities;

(j) To the Comptroller General or any of his authorized representatives in the course of the performance of the duties of the General Accounting Office;

(k) Pursuant to the order of a court of competent jurisdiction; or

(l) To a consumer reporting agency in accordance with 31 U.S.C. 3711(e).

§ 1202.62 What are the procedures for disclosure of records to a third party?

(a) To obtain access to records about a person other than yourself, address the request to the NARA Privacy Act Officer, National Archives and Records Administration, Room 3110, 8601 Adelphi Rd., College Park, MD 20740–6001. If you are requesting access for statistical research as described in § 1202.60(e), you must submit a written statement that includes as a minimum:

(1) A statement of the purpose for requesting the records; and

(2) Certification that the records will be used only for statistical purposes.

(b) NARA will acknowledge your request within 10 workdays and will make a decision within 30 workdays, unless NARA notifies you that the time limit must be extended for good cause.

(c) Upon receipt of your request, NARA will verify your right to obtain access to documents pursuant to § 1202.60. Upon verification, the system manager will make the requested records available to you.

(d) If NARA determines that the disclosure is not permitted under § 1202.60, the system manager will deny your request in writing. NARA will inform you of the right to submit a request for review of the denial and a final determination to the appropriate NARA Privacy Act Appeal Officer.

§ 1202.64 How do I appeal a denial of disclosure?

(a) Your request for a review of the denial of disclosure to records maintained by the Office of the Inspector General must be addressed to the NARA Privacy Act Appeal Officer (N), National Archives and Records Administration, Room 4200, 8601 Adelphi Rd., College Park, MD 20740–6001.

(b) Requests for a review of a denial of disclosure to all other NARA records must be addressed to the NARA Privacy Act Appeal Officer (ND), National Archives and Records Administration, Room 4200, 8601 Adelphi Rd., College Park, MD 20740–6001.

§ 1202.66 How does NARA keep account of disclosures?

(a) Except for disclosures made to NARA employees in the course of the performance of their duties or when required by the Freedom of Information Act (see § 1202.60(a) and (b)), NARA keeps an accurate accounting of each disclosure and retains it for 5 years after the disclosure or for the life of the record, whichever is longer. The accounting includes the:

(1) Date of disclosure;

(2) Nature, and purpose of each disclosure; and

(3) Name and address of the person or agency to which the disclosure is made.

(b) The system manager also maintains with the accounting of disclosures:

(1) A full statement of the justification for the disclosures;

(2) All documentation surrounding disclosure of a record for statistical or law enforcement purposes; and

(3) Evidence of written consent by the subject individual to a disclosure, if applicable.

(c) Except for the accounting of disclosures made for a law enforcement activity (see § 1202.60(g)) or of disclosures made from exempt systems (see subpart F of this part), the accounting of disclosures will be made available to the subject individual upon request. Procedures for requesting access to the accounting of disclosures are in subpart C.

Subpart E—Request To Amend Records

§ 1202.70 Whom should I contact at NARA to amend records about myself?

If you believe that a record that NARA maintains about you is not accurate, timely, relevant or complete, you may request that the record be amended. Write to the NARA Privacy Act Officer, Room 3110, 8601 Adelphi Rd, College Park, MD 20470–6001. Employees of NARA who desire to amend their personnel records should write to the Director, Human Resources Services Division. You should include as

much information, documentation, or other evidence as needed to support your request to amend the pertinent record. Mark both the envelop and the letter with the phrase ''Privacy Act—Request To Amend Record.''

§ 1202.72 How does NARA handle requests to amend records?

(a) NARA will acknowledge receipt of a request to amend a record within 10 workdays. If possible, the acknowledgment will include the system manager's determination either to amend the record or to deny your request to amend as provided in § 1202.76.

(b) When reviewing a record in response to your request to amend, the system manager will assess the accuracy, relevance, timeliness, and completeness of the existing record in light of your proposed amendment to determine if your request to amend is justified. If you request the deletion of information, the system manager also will review your request and the existing record to determine whether the information is relevant and necessary to accomplish NARA's purpose, as required by law or Executive order.

§ 1202.74 How will I know if NARA approved my amendment request?

If NARA approves your amendment request, the system manager will promptly make the necessary amendment to the record and will send a copy of the amended record to you. NARA will also advise all previous recipients of the record, using the accounting of disclosures, that an amendment has been made and give the substance of the amendment. Where practicable, NARA will also send a copy of the amended record to previous recipients.

§ 1202.76 Can NARA deny my request for amendment?

If the system manager denies your request to amend or determines that the record should be amended in a manner other than that requested by you, NARA will advise you in writing of the decision. The denial letter will state:

(a) The reasons for the denial of your amendment request;

(b) Proposed alternative amendments, if appropriate;

(c) Your right to appeal the denial; and

(d) The procedures for appealing the denial.

§ 1202.78 How do I accept an alternative amendment?

If your request to amend a record is denied and NARA suggested alternative amendments, and you agree to those alternative amendments, you must notify the Privacy Act Officer who will then make the necessary amendments in accordance with § 1202.74.

§ 1202.80 How do I appeal the denial of a request to amend a record?

(a) If you disagree with a denial of your request to amend a record, you can file an appeal of that denial.

(1) Address your appeal of the denial to amend records signed by a system manager other than the Inspector General, to the NARA Privacy Act Appeal Official (ND), Room 3110, 8601 Adelphi Road, College Park, MD, 20740–6001.

(2) Address the appeal of the denial to amend records signed by the Inspector General to the NARA Privacy Act Appeal Official (N), Room 3110, 8601 Adelphi Road, College Park, MD, 20740–6001.

(3) For current NARA employees if the denial to amend concerns a record maintained in the employee's Official Personnel Folder or in another Government-wide system maintained by NARA on behalf of another agency, NARA will provide the employee with name and address of the appropriate appeal official in that agency.

(b) Appeals to NARA must be in writing and must be postmarked no later than 35 calendar days from the date of the NARA denial of a request to amend. Your appeal letter and envelope must be marked ''Privacy Act—Appeal''.

(c) Upon receipt of an appeal, the NARA Privacy Act Appeal Official will consult with the system manager, legal counsel, and such other officials as may be appropriate. If the appeal official determines that the record should be amended, he or she will instruct the system manager to amend the record in accordance with § 1202.74 and will notify you of that action.

(d) If, after consulting with officials specified in paragraph (c) of this section, the NARA Privacy Act Appeal Official determines that your appeal should be rejected, the NARA Privacy Act Appeal Official will notify you in writing of that determination. This notice serves as NARA's final determination on your request to amend a record. The letter to you will include:

(1) The reason for the rejection of your appeal;

(2) Proposed alternative amendments, if appropriate, which you may accept (see 36 CFR 1202.78 for the procedure);

(3) Notice of your right to file a Statement of Disagreement for distribution in accordance with § 1202.82; and

(4) Notice of your right to seek judicial review of the NARA final determination, as provided in § 1202.84.

(e) The NARA final determination will be made no later than 30 workdays from the date on which the appeal is received by the NARA Privacy Act Appeal Official. In extraordinary circumstances, the NARA Privacy Act Appeal Official may extend this time limit by notifying you in writing before the expiration of the 30 workdays. The notification will include a justification for the extension of time.

§ 1202.82 How do I file a Statement of Disagreement?

If you receive a NARA final determination denying your request to amend a record, you may file a Statement of Disagreement with the appropriate system manager. The Statement of Disagreement must include an explanation of why you believe the record to be inaccurate, irrelevant, untimely, or incomplete. The system manager will maintain your Statement of Disagreement in conjunction with the pertinent record. The System Manager will send a copy of the Statement of Disagreement to any person or agency to whom the record has been disclosed, only if the disclosure was subject to the accounting requirements of § 1202.60.

§ 1202.84 Can I seek judicial review?

Yes, within 2 years of receipt of a NARA final determination as provided in § 1202.54 or § 1202.80, you may seek judicial review of that determination. You may file a civil action in the Federal District Court:

(a) In which you reside or have a principal place of business;

(b) In which the NARA records are located; or

(c) In the District of Columbia.

Subpart F—Exemptions

§ 1202.90 What NARA systems of records are exempt from release under the National Security Exemption of the Privacy Act?

(a) The Investigative Case Files of the Inspector General (NARA–23) and the Personnel Security Case Files (NARA–24) systems of records are eligible for exemption under 5 U.S.C. 552a(k)(1) because the records in these systems:

(1) Contain information specifically authorized under criteria established by an Executive Order to be kept secret in the interest of national defense or foreign policy and

(2) Are in fact properly classified pursuant to such Executive Order.

(b) The systems described in paragraph (a) are exempt from 5 U.S.C. 552a (c)(3), (d), (e)(1), and (e)(4)(G) and (H). Exemptions from the particular subsections are justified for the following reasons:

(1) From subsection (c)(3) because accounting for each disclosure could result in the release of properly classified information which would compromise the national defense or disrupt foreign policy.

(2) From the access and amendment provisions of subsection (d) because access to the records in these systems of records could result in the release of properly classified information which would compromise the national defense or disrupt foreign policy. Amendment of either of these series of records would interfere with ongoing investigations and law enforcement or national security activities and impose an impossible administrative burden by requiring investigations to be continuously reinvestigated.

(3) From subsection (e)(1) because verification of the accuracy of all information to the records could result

in the release of properly classified information which would compromise the national defense or disrupt foreign policy.

(4) From subsection (e)(4)(G) and (H) because these systems are exempt from the access and amendment provisions of subsection (d), pursuant to subsection (k)(1) of the Privacy Act.

§ 1202.92 What NARA systems of records are exempt from release under the Law Enforcement Exemption of the Privacy Act?

(a) The Investigative Files of the Inspector General (NARA–23) system of records is eligible for exemption under 5 U.S.C. 552a(k)(2) because this record system contains investigatory material of actual, potential or alleged criminal, civil or administrative violations, compiled for law enforcement purposes other than within the scope of subsection (j)(2) of 5 USC 552a. If you are denied any right, privilege or benefit that you would otherwise be entitled by Federal law, or for which you would otherwise be eligible, as a result of the record, NARA will make the record available to you, except for any information in the record that would disclose the identity of a confidential source as described in 5 U.S.C. 552a(k)(2).

(b) The system described in paragraph (a) of this section is exempt from 5 U.S.C. 552a (c)(3), (d), (e)(1) and (e)(4)(G) and (H), and (f). Exemptions from the particular subsections are justified for the following reasons:

(1) From subsection (c)(3) because release of disclosure accounting could alert the subject of an investigation about the alleged violations, to the existence of the investigation and to the fact that they are being investigated by the Office of Inspector General (OIG) or another agency. Release of such information could provide significant information concerning the nature of the investigation, resulting in the tampering or destruction of evidence, influencing of witnesses, danger to individuals involved, and other activities that could impede or compromise the investigation.

(2) From the access and amendment provisions of subsection (d) because access to the records contained in this system of records could inform the subject of an investigation of an actual or potential criminal, civil, or administrative violation, of the existence of that investigation; of the nature and scope of the information and evidence obtained as to his/her activities; of the identity of confidential sources, witnesses, and law enforcement personnel; and of information that may enable the subject to avoid detection or apprehension. These factors would present a serious impediment to effective law enforcement where they prevent the successful completion of the investigation, endanger the physical safety of confidential sources, witnesses, and law enforcement personnel, and/or lead to the improper influencing of witnesses, the destruction of evidence, or the fabrication of testimony. In addition, granting access to such information could disclose security-sensitive or confidential business information or information that would constitute an unwarranted invasion of the personal privacy of third parties. The amendment of these records could allow the subject to avoid detection or apprehension and interfere with ongoing investigations and law enforcement activities.

(3) From subsection (e)(1) because the application of this provision could impair investigations and interfere with the law enforcement responsibilities of the OIG or another agency for the following reasons:

(i) It is not possible to detect relevance or need for specific information in the early stages of an investigation, case or matter. After the information is evaluated, relevance and necessity may be established.

(ii) During an investigation, the OIG may obtain information about other actual or potential criminal, civil or administrative violations, including those outside the scope of its jurisdiction. The OIG should retain this information, as it may aid in establishing patterns of inappropriate activity, and can provide valuable leads for Federal and other law enforcement agencies.

(iii) In interviewing individuals or obtaining other forms of evidence during an investigation, information may be supplied to an investigator, which relates to matters incidental to the

primary purpose of the investigation but which may relate also to matters under the investigative jurisdiction of another agency. Such information cannot readily be segregated.

(iv) From subsection (e)(4)(G) and (H) because this system is exempt from the access and amendment provisions of subsection (d), pursuant to subsection (k)(2) of the Privacy Act.

(v) From subsection (f) because this system is exempt from the access and amendment provisions of subsection (d), pursuant to subsection (k)(2) of the Privacy Act.

§ 1202.94 What NARA systems of records are exempt from release under the Investigatory Information Material exemption of the Privacy Act?

(a) The Personnel Security Case Files (NARA–24) system of records is eligible for exemption under 5 U.S.C. 552a(k)(5) because it contains investigatory material compiled solely for the purpose of determining suitability, eligibility, or qualifications for federal employment or access to classified information. The only information exempt under this provision is that which would disclose the identity of a confidential source described in 5 U.S.C. 552a(k)(2).

(b) The system of records described in paragraph (a) of this section is exempt from 5 U.S.C. 552a(d)(1). Exemption from the particular subsection is justified as access to records in the system would reveal the identity(ies) of the source(s) of information collected in the course of a background investigation.

PART 1206—NATIONAL HISTORICAL PUBLICATIONS AND RECORDS COMMISSION

Subpart A—General

Sec.
1206.1 Scope of part.
1206.2 Definitions.
1206.4 Purpose of the Commission.
1206.6 The Commission's Grant Program.
1206.7 Organization.

Subpart B—Publications Program

1206.10 General.
1206.12 Scope and purpose.
1206.16 Project requirements.
1206.18 Subsidies for printing costs.
1206.20 Microform publication standards.

Subpart C—Records Program

1206.30 General.
1206.32 Scope and purpose.
1206.36 State historical records coordinator.
1206.37 Deputy State historical records coordinator.
1206.38 State historical records advisory board.

Subpart D—Grant Procedures

1206.50 Types of grants.
1206.52 Grant limitations.
1206.54 Who may apply.
1206.56 When to apply.
1206.58 How to apply.
1206.66 Review and evaluation of grant proposals.
1206.68 Grant administration responsibilities.
1206.70 Grant instrument.
1206.78 Grant reports.
1206.79 Audits.
1206.80 Safety precautions.
1206.82 Acknowledgement.
1206.94 Compliance with Governmentwide requirements.

AUTHORITY: 44 U.S.C. 2104(a); 44 U.S.C. 2501–2506.

SOURCE: 42 FR 56123, Oct. 21, 1977, unless otherwise noted. Redesignated at 50 FR 15723, Apr. 19, 1985.

Subpart A—General

§ 1206.1 Scope of part.

This part prescribes the procedures and rules governing the operation of the grant program of the National Historical Publications and Records Commission.

[61 FR 5656, Feb. 13, 1996]

§ 1206.2 Definitions.

(a) The term *Commission* means the National Historical Publications and Records Commission or the Chairman of the Commission or the Executive Director of the Commission, acting on the Commission's behalf.

(b) The term *historical records* means record material having permanent or enduring value regardless of physical form or characteristics, including but not limited to manuscripts, personal papers, official records, maps, and audiovisual materials.

(c) In §§1206.36 and 1206.38, the term *State* means all 50 States of the Union, plus the District of Columbia, Puerto Rico, the U.S. Virgin Islands, Guam, American Samoa, Northern Mariana Islands, and the Trust Territories of the Pacific.

(d) In §1206.36(a), the term *State-funded agency* means any historical or archival agency that receives a regular State appropriation.

(e) The term *State projects* means records projects directed by organizations operating within and involving records or activities within one State. Records or activities of such projects will typically be under the administrative control of the organization applying for the grant. The records or activities need not relate to the history of the State.

(f) The term *regional projects* means records projects involving records or activities in more than one State in a region. Regional projects include those undertaken by regional archival groups or consortia.

(g) The term *national projects* means records projects involving records or activities in several regions, in widely separated States, or that have an international component. In general, the location of the records and/or the site of grant-funded activities will determine the category of submission.

[42 FR 56123, Oct. 21, 1977. Redesignated at 50 FR 15723, Apr. 19, 1985, and amended at 55 FR 21542, May 25, 1990; 61 FR 5656, Feb. 13, 1996]

§ 1206.4 Purpose of the Commission.

The National Historical Publications and Records Commission makes plans, estimates, and recommendations regarding the preservation and use of historical records that may be important for an understanding and appreciation of the history of the United States. It also cooperates with and encourages appropriate Federal, State, and local agencies and nongovernmental institutions in collecting and preserving and, when it considers it desirable, in editing and publishing the records of outstanding citizens, groups, or institutions and other important documents. On recommendation of the Commission, the Archivist of the United States makes grants to State and local agencies and to non-profit organizations and institutions and to individuals in support of these programs.

[55 FR 21542, May 25, 1990]

§ 1206.6 The Commission's Grant Program.

The Commission operates primarily through a grant program supporting publications projects (subpart B) and records projects (subpart C). Fellowships for individuals in archival administration and documentary editing are also offered, as well as an annual institute for the editing of historical documents.

[61 FR 5657, Feb. 13, 1996]

§ 1206.7 Organization.

The Executive Director, Program Director, and the staff of the Commission administer the publications and records grants under the guidance of the Commission and the immediate administrative direction of its chairman, the Archivist of the United States.

[61 FR 5657, Feb. 13, 1996]

Subpart B—Publications Program

SOURCE: 55 FR 21542, May 25, 1990, unless otherwise noted.

§ 1206.10 General.

This subpart describes the scope, purpose, and operation of that part of the grant program relating to publications projects and prescribes requirements applicable to printed, microform, and electronic publication projects. Grant application and administration procedures are given in subpart D of this part.

[61 FR 5657, Feb. 13, 1996]

§ 1206.12 Scope and purpose.

Publications projects are intended to ensure the dissemination and accessibility of documentary source material important to the study and understanding of U.S. history. Projects should therefore be based upon material of widespread interest among scholars, students, and informed citizens. Documents should have historical

value and interest that transcend local and State boundaries.

[61 FR 5657, Feb. 13, 1996]

§ 1206.16 Project requirements.

(a) Each publications project shall include either the papers of a U.S. leader in a significant phase of life in the United States or documents relating to some outstanding event or to some topic or theme of national significance in U.S. history. These projects shall consist of collecting, compiling, editing, and publishing, either selectively or comprehensively, the papers or documents. Publication may be in the form of printed, microform, or electronic editions. Electronic formats for publication of documentary sources will be considered only when suitable preservation of the data can be assured. Three copies of each book publication should be deposited with the National Historical Publications and Records Commission (NHPRC), Washington, DC 20408. These copies may be included as part of the five complimentary copies to be sent by presses receiving subvention grants.

(b) For microform projects, the grantee shall make positive prints and all finding aids available to institutions, scholars, or students through interlibrary loan and for purchase. Five complimentary copies of guides and indexes produced by the projects shall be sent to the Commission.

[61 FR 5657, Feb. 13, 1996]

§ 1206.18 Subsidies for printing costs.

(a) The Commission will consider grant applications from university and other nonprofit presses for the subvention of part of the costs of manufacturing and disseminating volumes that have been formally endorsed by the Commission. Grants not exceeding $10,000 per volume ($3,000 for reprints) are awarded upon recommendation of the Commission to promote the availability of Commission-supported documentary editions.

(b) The granting of a subvention shall be used to encourage the highest standards in the production of volumes, particularly the quality of paper and ink.

(c) The Commission shall receive five complimentary copies of each published volume for which a subvention grant is made.

[55 FR 21542, May 25, 1990, as amended at 61 FR 5657, Feb. 13, 1996]

§ 1206.20 Microform publication standards.

Technical standards for NHPRC-sponsored microform projects are stated in the brochure ''National Historical Publications and Records Commission: Microform Guidelines,'' which will be supplied to applicants upon request and to grantee institutions at the time a grant is made for a microform project.

[61 FR 5657, Feb. 13, 1996]

Subpart C—Records Program

SOURCE: 55 FR 21543, May 25, 1990, unless otherwise noted.

§ 1206.30 General.

This subpart describes the scope, purpose, and operation of that part of the grant program relating to records projects. Grant application and administration procedures are given in subpart D of this part.

[61 FR 5657, Feb. 13, 1996]

§ 1206.32 Scope and purpose.

Through its support for records projects, the National Historical Publications and Records Commission encourages a greater effort at all levels of government and by private organizations to preserve and make available for use those records, generated in every facet of life, that further an understanding and appreciation of U.S. history. In the public sector, these historical records document significant activities of State, county, municipal, and other units of government. In the private sector, historical records include manuscripts, personal papers, and family or corporate archives that are maintained by a variety of general repositories as well as materials in special collections relating to particular fields of study, including the arts, business, education, ethnic and minority groups, immigration, labor, politics, professional services, religion, science, urban affairs, and women. In addition to recommending the supporting of

projects relating directly to a body of records, the Commission may also recommend support for projects to advance the state of the art, to promote cooperative efforts among institutions and organizations, and to improve the knowledge, performance, and professional skills of those who work with historical records.

[61 FR 5657, Feb. 13, 1996]

§ 1206.36 State historical records coordinator.

(a) The governor of each State desiring to participate fully in the program shall appoint a State historical records coordinator (coordinator), who shall be the full-time professional official in charge of the State archival program or agency. If the State has another state-funded historical agency or agencies with archival and/or records responsibilities, the official(s) in charge of at least one of these shall be a member of the State historical records advisory board (board). The coordinator is appointed to a minimum four-year term, but may continue to serve until replaced by the governor or until resignation. The coordinator shall serve as chair of the board and shall be the central coordinating officer for the historical records grant program in the State. The person appointed will not be deemed to be an official or employee of the Federal Government and will receive no Federal compensation for such service. The pamphlet ''Guidelines for State Historical Records Coordinators and State Historical Records Advisory Boards,'' which is available from the Commission and from State historical records coordinators, provides further information on the role of the coordinator.

(b) In the event of the resignation of the coordinator or other inability to serve, a deputy coordinator, if one has been designated, will serve as acting State coordinator until the governor makes an appointment. In the absence of a deputy coordinator, the NHPRC will recognize an acting coordinator, selected by the state board, who shall serve until the governor appoints a coordinator in order to conduct the necessary business of the board.

[61 FR 5657, Feb. 13, 1996]

§ 1206.37 Deputy State historical records coordinator.

A deputy State historical records coordinator may be designated to assist in carrying out the duties and responsibilities of the coordinator and to serve as an acting coordinator at the coordinator's direction or upon the coordinator's resignation or other inability to serve.

§ 1206.38 State historical records advisory board.

(a) Each State desiring to participate in the program shall define an appointment process and appoint a State historical records advisory board consisting of at least seven members, including the State historical records coordinator, who chairs the board, unless otherwise specified in state statute. The coordinator shall provide the Commission with a description of the appointment process. A majority of the members shall have recognized experience in the administration of government records, historical records, or archives. The board should be as broadly representative as possible of the public and private archives, records offices, and research institutions and organizations in the State. Board members will not be deemed to be officials or employees of the Federal Government and will receive no Federal compensation for their service on the board. They are appointed for three years with the possibility of renewal; and preferably terms are staggered so that one-third of the board is newly appointed or reappointed each year. If the board is not established in State law, members' terms continue until replacements are appointed. The board may adopt standards for attendance and may declare membership positions open if those standards are not met.

(b) The board is the central advisory body for historical records planning and for Commission-funded projects developed and carried out within the State. The board serves as a coordinating body to facilitate cooperation among historical records repositories and other information agencies within the state and as a state-level review body for grant proposals as defined in

the Commission's guidelines. Specifically, the board may perform such duties as sponsoring and publishing surveys of the conditions and needs of historical records in the State; soliciting or developing proposals for projects to be carried out in the State with NHPRC grants; reviewing proposals by institutions in the State and making recommendations about these to the Commission; developing, revising, and submitting to the Commission State priorities for historical records projects following guidelines developed by the Commission; promoting an understanding of the role and value of historical records; acting in an advisory capacity to the state archives and other statewide archival or records agencies; and reviewing, through reports and otherwise, the operation and progress of projects in the State financed by NHPRC grants.

[61 FR 5658, Feb. 13, 1996]

Subpart D—Grant Procedures

SOURCE: 55 FR 21544, May 25, 1990, unless otherwise noted.

§ 1206.50 Types of grants.

(a) *General*. The Archivist of the United States, after considering the advice and recommendations of the Commission, may make three types of NHPRC grants: Outright grants, matching grants, and combined grants.

(b) *Outright grants*. An application for an outright grant requests an NHPRC grant for the entire cost of a project, minus the share of the cost borne by the applicant. The maximum possible cost sharing is encouraged in every proposal, and the level of cost sharing will be an important factor in the Commission's recommendation on most types of proposals.

(c) *Matching grants*. An application for a matching grant should be made when an applicant has prospects of securing financial support from a third party or, in the case of a State or local government agency, funds from the institution's own appropriation source are provided expressly for the project proposed in the application. Upon Commission approval of a matching grant request, the applicant shall present written documentation certifying that matching funds have been provided for the project by the non-Federal source. In the case of a State or local government agency, the matching requirement may also be met through matching funds from the State or local government, provided that it can be demonstrated to the Commission's satisfaction that the matching amount has been provided above and beyond funds previously allocated or planned for the agency's budget and that the funds are set aside exclusively to support the project proposed for an NHPRC grant. Applicants need not, however, have money in hand to make a matching grant request; they need only assure the Commission that they have reasonable prospects of obtaining the needed amounts.

(d) *Combined grants*. A combined grant comprises both outright funds and matching funds. When the funds an applicant can raise plus the equivalent amount of an NHPRC grant do not equal the required budget, the difference is requested in outright funds. For example, if the applicant needs $75,000 and is able to raise $25,000 in gifts or in a new appropriation for the project, a combined grant of $25,000 outright and $25,000 in matching funds for a total of $50,000 should be requested from the Commission. Rules governing the release of matching funds in matching grants also govern the release of matching funds in combined grants.

[55 FR 21544, May 25, 1990, as amended at 61 FR 5658, Feb. 13, 1996]

§ 1206.52 Grant limitations.

Grant limitations are described in the grant program guidelines pamphlet, available on request from the Commission.

[61 FR 5658, Feb. 13, 1996]

§ 1206.54 Who may apply.

The Commission will consider applications from State and local government agencies, nonprofit organizations and institutions, Federally acknowledged or state-recognized Native American tribes or groups, and, under certain conditions, from individuals. Proposals for State projects falling under

the Commission's goals, ''To Assure the Preservation of the Nation's Documentary Heritage through State Collaborative Efforts'' and ''To Achieve Progress in the Preservation and Use of Original Source Material,'' as defined in the grant program guidelines, will be accepted only from applicants in States in which a State historical records coordinator and a State historical records advisory board are currently appointed. This requirement does not apply to regional or national projects.

[61 FR 5658, Feb. 13, 1996]

§ 1206.56 When to apply.

Grant proposals are considered during Commission meetings held three times during the year. For current application deadlines contact the grant program staff or State historical records coordinators (for records grant proposals). Some State boards have established pre-submission review deadlines for records proposals; further information is available from State coordinators.

[61 FR 5658, Feb. 13, 1996]

§ 1206.58 How to apply.

(a) *Contact with NHPRC staff.* The Commission encourages applicants to discuss proposals through correspondence, by phone, or in person with Commission staff and/or, in the case of records proposals, with the appropriate State historical records coordinator before the proposal is submitted and at all stages of development of the proposal.

(b) *Application forms.* Applicants for NHPRC grants shall use Standard Form 424, Application for Federal Assistance, and NA Form 17001, Budget Form (OMB Control Number 3095–0004). Applicants for subvention grants also submit the NHPRC subvention grant application (OMB Control Number 3095–0021), and applicants for archival administration fellowship host institution grants submit a special application (OMB Control Number 3095–0015). Applicants for NHPRC-sponsored fellowships complete the appropriate fellowship application (OMB Control Numbers 3095–0011, 3095–0012, or 3095–0014). Copies of these applications and forms are available from the commission. Project proposals and related correspondence should be sent to the National Historical Publications and Records Commission (NHPRC), Washington, DC 20408.

(c) *Assurances and certifications.* All grant applications to the Commission must include the following assurances and certifications signed by an authorized representative of the applicant institution, or in the case of an individual applicant, by that individual: Standard Form 424B, Assurances: Non-Construction Programs; the Certification Regarding Debarment, Suspension, and Other Responsibility Matters specified in part 1209, appendix B; the Certification Regarding Drug-free Workplace Requirements specified in part 1209, appendix C, of this chapter; and, if the application requests more than $100,000 in Federal funds, a signed Certification for Grants, Loans, or Cooperative Agreements in Excess of $100,000 (certification regarding lobbying). Assurance and certification language is included in the program pamphlet.

(d) *Program guidelines pamphlet.* Supplementary information for applicants is contained in the pamphlet, ''Program Guidelines: Applications and Grants,'' which is available from the Commission upon request. The pamphlet is also available from State historical records coordinators. This pamphlet includes copies of the application form and certifications, guidelines on the preparation of project budgets and program narrative statements, and other guidance on applying for and administering NHPRC grants. OMB Control Number 3095–0013 has been assigned to this information collection.

[55 FR 21544, May 25, 1990, as amended at 61 FR 5658, Feb. 13, 1996]

§ 1206.66 Review and evaluation of grant proposals.

(a) *Records grant proposals.* For records grant proposals, State historical records advisory boards review and evaluate proposals for State projects and forward recommendations for action to the Commission. Boards may decide that certain proposals are incomplete or require further development; in these instances proposals may

be returned to the applicant by the board with a recommendation for revision and resubmission in a future funding cycle. The Commission staff shall be informed of the recommendations. All records grant proposals for which recommendations for Commission action are received from State boards and regional, national, and State board-sponsored proposals received directly by the Commission are reviewed by the Commission staff for completeness, conformity with application requirements and relevance to the objectives of the grant program. Regional and national proposals and proposals submitted by boards on their own behalf may also be referred by the Commission staff to selected State historical records coordinators, members of boards, or others for appropriate review and evaluation of the projects. Following review and evaluation, proposals are referred to the Commission at regular meetings.

(b) *Publications grant proposals.* The Commission staff reviews publications grant proposals for completeness, conformity with application requirements, and relevance to the objectives of the grant program. Proposals are sent to specialists in American history and documentary editing for review and recommendations. The recommendations are considered by the full Commission at regular meetings.

(c) *Subvention grant applications.* The Commission staff reviews subvention grant applications to ensure their adherence to established technical standards for the production of printed volumes, particular in the quality of paper and ink. Staff recommendations are considered by the full Commission at regular meetings.

[55 FR 21544, May 25, 1990, as amended at 61 FR 5659, Feb. 13, 1996]

§ 1206.68 Grant administration responsibilities.

Primary responsibility for the administration of grants is shared by the grantee institution and the project director designated by the institution. In the case of grants made to individuals, the individual named as project director has primary responsibility for the administration of the grant. Grants shall be administered in conformance with either the regulations in part 1210 of this chapter or, in the case of State and local governments, with the regulations in part 1207 of this chapter. All grants shall be in conformance with part 1209 of this chapter.

(a) *Changes in the grant project:*

(1) *Extension of the grant period.* Requests for extension of the grant period must be made before the end of the grant period and must be signed by the grantee institution's authorized representative as indicated on the grant application form (SF 424). No extensions will be allowed unless grantees are up-to-date in their submission of financial and narrative reports.

(2) *Rebudgeting.* To meet unanticipated program needs, grantees may adjust the amounts allocated to existing budget lines for both grant funds and cost sharing and may transfer grant funds among existing NHPRC-funded direct cost categories that appear in the final project budget approved by the Commission at the time of the grant award. Cost-sharing funds may also be shifted among existing cost-sharing categories. For grants where the NHPRC's award is less than $100,000, grantees may make these transfers without NHPRC approval. When Commission grant awards are for $100,000 or more, grantees must obtain prior approval from the NHPRC when cumulative transfers among direct cost categories total more than 10 percent of the total project budget (i.e., grant funds plus other funds). In addition, the Program Director of the Commission may approve the use of NHPRC grant funds for new cost categories for which Commission funds were not provided in the final approved budget where such action seems appropriate for the fulfillment of the original purposes of the grant and where the amount of funds involved does not exceed 10 percent of the amount of the award or $5,000, whichever is less. Requests to establish these new cost categories must be made in writing and signed by the grantee institution's authorized representative. Requests that exceed this limit are subject to approval by the full Commission.

(3) *Other changes requiring prior approval.* Prior written approval from the

Commission must be obtained for financial or programmatic changes in all cases involving the following: revision of the scope or objectives of the project; change of the project director or other key project personnel who have been specifically named in the grant application or award or related correspondence; and, contracting out, subgranting, or otherwise obtaining the services of a third party to perform activities central to the purposes of the grant, unless specified in the grant proposal.

(b) *Submission of requests for changes.* All requests for approval of budget or programmatic changes must be submitted in the form of a letter signed by the grantee institution's authorized representative for the grant and addressed to the Program Director. A written response signed by the Program Director of the Commission will constitute approval for the changes.

[61 FR 5659, Feb. 13, 1996]

§ 1206.70 Grant instrument.

The grant award instrument is a letter from the Archivist of the United States to the grantee. The letter and attachments specify terms of the grant.

§ 1206.78 Grant reports.

(a) Financial status reports and narrative progress reports are required for all grants. Standard Form 269, Financial Status Report, shall be used for all financial reports. The pamphlet, ''Program Guidelines: Applications and Grants,'' which is provided to each grantee and is available from the Commission on request, specifies the content of the narrative progress reports (OMB Control Number 3095–0013).

(b) Financial reports are due annually 30 days after the end of each reporting period. Narrative progress reports are due 30 days after the end of each six-month period. Final financial and narrative reports are due within 90 days after the expiration or termination of the grant period. Grants with a duration of six months or less require a final report only. Additional rules on financial and performance reports are found in §§ 1210.51 and 1210.52 or §§ 1207.40 and 1207.41 of this chapter, as appropriate.

[61 FR 5659, Feb. 13, 1996]

§ 1206.79 Audits.

Grantees are responsible for obtaining audits in accordance with either the Single Audit Act of 1984 (31 U.S.C. 7501–7), for which audit requirements have been set forth in Office of Management and Budget (OMB) Circular A–128, ''Audits of State and Local Governments,'' or requirements established under OMB Circular A–133, ''Audits of Institutions of Higher Education and Other Nonprofit Organizations,'' as appropriate. Copies are available from the Commission office or from OMB. The grantee is responsible for ensuring that the NHPRC receives a copy of the audit report for any audit performed during the grant period or for three years thereafter. A reasonable portion of grant funds, as defined in the OMB Circular, may be used to comply with audit requirements. The Commission prefers that the grantee assume such costs as institutional cost sharing.

[61 FR 5660, Feb. 13, 1996]

§ 1206.80 Safety precautions.

NARA and the Commission cannot assume any liability for accidents, illnesses, or claims arising out of any work undertaken with the assistance of the grant.

§ 1206.82 Acknowledgment.

Grantee institutions, grant directors, or grant staff personnel may publish results of any work supported by an NHPRC grant without review by the Commission. Publications or other products resulting from the project, shall, however, acknowledge the assistance of the NHPRC grant.

§ 1206.94 Compliance with Governmentwide requirements.

In addition to the grant application and grant administration requirements outlined in this part 1206, grantees are responsible for complying with applicable Governmentwide requirements contained in part 1210 or part 1207 of this chapter, as appropriate, and part 1209 of this chapter.

[61 FR 5660, Feb. 13, 1996]

EFFECTIVE DATE NOTE: At 67 FR 42494, June 24, 2002, part 1206 was revised, effective July 24, 2002. For the convenience of the user, the revised text is set forth as follows:

PART 1206—NATIONAL HISTORICAL PUBLICATIONS AND RECORDS COMMISSION

Subpart A—General

Sec.
1206.1 How do you use pronouns in this part?
1206.2 What does this part cover?
1206.3 What terms have you defined?
1206.4 What is the purpose of the Commission?
1206.5 Who is on the Commission?
1206.6 How do you organize the grant program?
1206.8 How do you operate the grant program?

Subpart B—Publications Grants

1206.10 What are the scope and purpose of publications grants?
1206.12 What type of proposal is eligible for a publications grant?
1206.14 What type of proposal is ineligible for a publications grant?
1206.16 What are my responsibilities once I have received a publications grant?
1206.18 What is a subvention grant, and am I eligible for one?

Subpart C—Records Grants

1206.20 What are the scope and purpose of records grants?
1206.22 What type of proposal is eligible for a records grant?
1206.24 What type of proposal is ineligible for a records grant?

Subpart D—State Historical Records Advisory Boards

1206.30 What is a State historical records advisory board?
1206.32 What is a State historical records coordinator?
1206.34 What are the duties of the deputy State historical records coordinator?

Subpart E—Applying for NHPRC Grants

1206.40 What types of funding and cost sharing arrangements does the Commission make?
1206.42 Does the Commission ever place conditions on its grants?
1206.44 Who may apply for NHPRC grants?
1206.46 When are applications due?
1206.48 How do I apply for a grant?
1206.50 What must I provide as a formal grant application?
1206.52 Who reviews and evaluates grant proposals?
1206.54 What formal notification will I receive and will it contain other information?

Subpart F—Grant Administration

1206.60 Who is responsible for administration of NHPRC grants?
1206.62 Where can I find the regulatory requirements that apply to NHPRC grants?
1206.64 When do I need prior written approval for changes in the grant project?
1206.66 How do I obtain written approval for changes in my grant project?
1206.68 Are there any changes for which I do not need approval?
1206.70 What reports am I required to make?
1206.72 What is the format and content of the financial report?
1206.74 What is the format and content of the narrative report?
1206.76 What additional materials must I submit with the final narrative report?
1206.78 Does the NHPRC have any liability under a grant?
1206.80 Must I acknowledge NHPRC grant support?

AUTHORITY: 44 U.S.C. 2104(a); 44 U.S.C. 2501–2506.

Subpart A—General

§ 1206.1 How do you use pronouns in this part?

In the section heading questions we use the pronouns ''I'' and ''my'' to refer to the reader, and ''you'' to refer to the National Historical Publications and Records Commission (''NHPRC'' or ''the Commission'') as if you, the reader, were asking us, the Commission, these questions. In the section body, we use the pronouns ''you'' and ''yours'' to refer to the reader and ''we'' and ''our'' to refer to the Commission as we answer the questions posed.

§ 1206.2 What does this part cover?

This part prescribes the procedures and rules governing the operation of the grant program of the National Historical Publications and Records Commission.

§ 1206.3 What terms have you defined?

(a) The term *Commission* means the National Historical Publications and Records Commission or the Chairman of the Commission or the Executive Director of the Commission, acting on the Commission's behalf.

(b) The term *historical records* means record material having permanent or enduring value regardless of physical form or characteristics, including, but not limited to, manuscripts, archives, personal papers, official records, maps, audiovisual materials, and electronic files.

(c) In §§ 1206.30 and 1206.32, the term *State* means all 50 States of the Union, plus the

District of Columbia, Puerto Rico, the U.S. Virgin Islands, Guam, American Samoa, Northern Mariana Islands, and the Trust Territories of the Pacific.

(d) The term *State projects* means records projects involving records or activities directed by organizations operating within one State. Records or activities of such projects will typically be under the administrative control of the organization applying for the grant. The records or activities need not relate to the history of the State.

(e) The term *cost sharing* means the financial contribution the applicant pledges to the cost of a project. Cost sharing can include both direct and indirect expenses, in-kind contributions, third-party contributions, and any income earned directly by the project (*e.g.*, registration fees).

(f) The term *direct costs* means expenses that are attributable directly to the cost of a project, such as salaries, project supplies, travel expenses, and equipment rented or purchased for the project.

(g) The term *indirect costs* means costs incurred for common or joint objectives and therefore not attributable to a specific project or activity. Typically, indirect costs include items such as overhead for facilities maintenance and accounting services.

(h) The term *board* refers to a State historical records advisory board.

(i) The term *coordinator* means the coordinator of a State historical records advisory board.

§ 1206.4 What is the purpose of the Commission?

The National Historical Publications and Records Commission, a statutory body affiliated with the National Archives and Records Administration, supports a wide range of activities to preserve, publish, and encourage the use of primary documentary sources. These sources can be in every medium, created with tools ranging from quill pen to computer, relating to the history of the United States. Through our grant programs, training programs, and special projects, we offer advice and assistance to non-Federal, non-profit organizations, agencies, and institutions, including Federally-acknowledged or State-recognized Native American tribes or groups, and to individuals committed to the preservation, publication, and use of United States documentary resources.

§ 1206.5 Who is on the Commission?

Established by Congress in 1934, the Commission is a 15-member body, chaired by the Archivist of the United States and comprised of representatives of the three branches of the Federal Government and of professional associations of archivists, historians, documentary editors, and records administrators.

§ 1206.6 How do you organize the grant program?

We primarily offer grants through a program supporting publications projects (Subpart B) and records projects (Subpart C). We also offer fellowships for individuals in archival administration and documentary editing, as well as an annual institute for the editing of historical documents.

§ 1206.8 How do you operate the grant program?

(a) The Executive Director and staff manage the program under guidance from the Commission and the immediate administrative direction of its chairman, the Archivist of the United States.

(b) To assure fair treatment of every application, all members of the Commission and its staff follow conflict-of-interest rules.

(c) The purpose and work plan of all NHPRC funded grant projects must be in accord with current NHPRC guidelines and funding can be released only upon the recommendation of the Commission to the Archivist.

Subpart B—Publications Grants

§ 1206.10 What are the scope and purpose of publications grants?

Publications projects are intended to make documentary source material that is important to the study and understanding of United States history widely available. Historical records must have national value and interest.

§ 1206.12 What type of proposal is eligible for a publications grant?

We provide support for:

(a) Documentary editing projects consisting of either the papers of a United States leader in a significant phase of life in the United States or historical records relating to outstanding events or topics or themes of national significance in United States history. These projects involve collecting, compiling, transcribing, editing, annotating, and publishing, either selectively or comprehensively, the papers or historical records.

(b) Fellowships in historical documentary editing at editorial projects supported by the NHPRC.

(c) Subvention grants to nonprofit presses to help defray publication costs of NHPRC-supported or endorsed editions.

§ 1206.14 What type of proposal is ineligible for a publications grant?

We do not support:

(a) Historical research apart from the editing of documentary publications; or

(b) Documentary editing projects to publish the papers of someone who has been deceased for fewer than ten years.

§ 1206.16 What are my responsibilities once I have received a publications grant?

(a) *Printed publications.*

(1) *With no subvention grant.* You, the project director, must send three copies of each book publication to: National Historical Publications and Records Commission (NHPRC), National Archives and Records Administration, 700 Pennsylvania Avenue, NW, Washington, DC 20408–0001.

(2) *With subvention grant.* You, the publisher, must submit five copies of each book publication to the NHPRC at the address in paragraph (a)(1) of this section and ten copies to the project director or editor. The project director need not provide any copies to the NHPRC. (See § 1206.18.)

(b) *Microform publications.* For microform projects, you, the grantee, must make positive micrographics and all finding aids available to institutions, scholars, or students through interlibrary loan and for purchase. You must also send three complimentary copies of the microform guides and indexes to the NHPRC at the address in paragraph (a)(1) of this section.

(c) *Electronic documentary publications.* If you publish a documentary edition in electronic form, you must produce a copy of the edition in an archivally-recognized format for long-term preservation.

§ 1206.18 What is a subvention grant, and am I eligible for one?

(a) A subvention grant is a subsidy of printing costs.

(b) We use subvention grants to encourage the widest possible distribution of NHPRC-supported and endorsed documentary editions and the highest archival permanence standards of paper, printing, and binding.

(c) The Commission considers grant applications from nonprofit presses for the subvention of part of the costs of manufacturing and distributing volumes that we have funded or formally endorsed.

(d) You, the publisher, must send five complimentary copies to NHPRC, and ten complimentary copies to the project director or editor for each published volume for which we gave you a subvention grant.

Subpart C—Records Grants

§ 1206.20 What are the scope and purpose of records grants?

Records projects are supported by the National Historical Publications and Records Commission to preserve and make available State government, local government, and non-government historical records of national and State significance for the purpose of furthering an understanding and appreciation of United States history.

§ 1206.22 What type of proposal is eligible for a records grant?

We provide support for:

(a) Locating, preserving and making available records of State, local, and other governmental units; and other private collections maintained in non-Federal, non-profit repositories and special collections relating to particular fields of study, including the arts, business, education, ethnic and minority groups, immigration, labor, politics, professional services, religion, science, urban affairs, and women;

(b) Advancing the state of the art in archival and records management; and in the long-term maintenance and easy access of authentic electronic records;

(c) Promoting cooperative efforts among institutions and organizations in archival and records management;

(d) Improving the knowledge, performance, and professional skills of those who work with historical records; and

(e) Fellowships in archival administration, a training program in various aspects of archival management held at host institutions.

§ 1206.24 What type of proposal is ineligible for a records grant?

We do not support proposals:

(a) To construct, renovate, furnish, or purchase a building or land;

(b) To purchase manuscripts or other historical records;

(c) To conserve archaeological artifacts, museum objects, or works of art;

(d) To exhibit archaeological artifacts, museum objects, works of art, and documents;

(e) To acquire, preserve, or describe books, periodicals, or other library materials;

(f) To acquire, preserve, or describe art objects, sheet music, or other works primarily of value as works of art or entertainment;

(g) To support celebrations, reenactments, and other observations of historical events.

(h) To conduct a records project centered on the papers of an appointed or elected public official who remains in major office, or is politically active, or the majority of whose papers have not yet been accessioned into a repository;

(i) To process historical records, most of which will be closed to researchers for more than five years, or not be accessible to all users on equal terms, or will be in a repository that denies public access;

(j) To conduct an arrangement, description, or preservation project in which the pertinent historical records are privately owned or deposited in an institution subject to withdrawal upon demand for reasons other than requirements of law; and

(k) To conduct an arrangement, description, or preservation project involving Federal government records that are:

(1) In the custody of the National Archives and Records Administration (NARA) or an archives officially affiliated with NARA;

(2) In the custody of another Federal agency; or

(3) Deposited in a non-Federal institution without an agreement authorized by NARA.

Subpart D—State Historical Records Advisory Boards

§ 1206.30 What is a State historical records advisory board?

(a) Each State actively participating in the NHPRC records program must adopt an appointment process and appoint a State historical records advisory board (the board) consisting of at least seven members, including the State historical records coordinator (see §1206.32), who chairs the board, unless otherwise specified in State statute or regulation. The board coordinator must provide the Commission with a description of the appointment process. A majority of the members should have recognizable experience in the administration of government records, manuscripts, or archives. The board should be as broadly representative as possible of the public and private archives, records offices, and research institutions and organizations in the State. Board members will not be deemed to be officials or employees of the Federal Government and will receive no Federal compensation for their service on the board. They are appointed for three years. They may be re-appointed to serve additional terms. Preferably their terms should be staggered so that one-third of the board is newly appointed or re-appointed each year. If the board is not established in State law, members may continue to serve until replacements are appointed. The board may adopt standards for attendance and may declare membership positions open if those standards are not met. The Board should adopt a conflict-of-interest policy, unless otherwise provided for in State statute or regulation.

(b) The board is the central advisory body for historical records planning and for Commission-funded records projects carried out within the State. The board helps historical records repositories and other information agencies coordinate activities within the State. The board reviews State records grant proposals for State projects as defined in the NHPRC guidelines and makes recommendations to the Commission. The board also engages in planning activities by developing, revising, and submitting to the Commission priorities for State historical records projects following the NHPRC guidelines. The board may also provide various other services. For example, it may sponsor and publish surveys of the conditions and needs of historical records in the State; solicit or develop proposals for projects to be carried out in the State with NHPRC grants or regrants; promote an understanding of the role and value of historical records; and review the operation and progress of projects in the State financed by NHPRC grants.

(c) The NHPRC will not consider a grant proposal from a State government agency until a board is appointed and all appointments are current. If an active board is not in place within a State, local governments, nonprofit organizations or institutions, and individuals within that state may apply directly to the Commission for support.

§ 1206.32 What is a State historical records coordinator?

(a) *Appointment.* In order to actively participate in the NHPRC records program, your governor must appoint a State historical records coordinator (coordinator), the full-time professional official in charge of the State archival program or agency, unless otherwise specified in state statute or regulation. If your State has another State government historical agency or agencies with archival and/or records responsibilities, the official(s) in charge of at least one of these must be a member of the State historical records advisory board (board).

(b) *Duties.* The coordinator is appointed to a minimum four-year term, but may continue to serve until replaced by the governor or until resignation. The coordinator will be the central coordinating officer for the historical records grant program in the State and should serve as chair of the board unless otherwise specified in the State statute or regulation. The coordinator is not deemed to be an official or employee of the Federal Government and will receive no Federal compensation for such service. The ''Manual of Suggested Practices for State Historical Records Coordinators and State Historical Records Advisory Boards'' which is available from the Commission and from State historical records coordinators, provides further information on the role of the coordinator. For a copy, write to NHPRC, National Archives and Records Administration, 700 Pennsylvania Avenue NW, Washington, DC 20408–0001, or contact us by e-mail at *nhprc@nara.gov*.

(c) *Replacement.* In the event of the resignation of the coordinator or other inability to serve, a deputy coordinator, if one has been designated, will serve as acting coordinator until the governor makes an appointment. In the absence of a deputy coordinator, the NHPRC will recognize an acting coordinator, selected by the State board, who will serve until the governor appoints a coordinator in order to conduct the necessary business of the board.

§ 1206.34 What are the duties of the deputy State historical records coordinator?

The governor or coordinator may designate a deputy State historical records coordinator to assist in carrying out the duties and responsibilities of the coordinator and to serve as an acting coordinator at the coordinator's direction or upon the coordinator's resignation or other inability to serve.

Subpart E—Applying for NHPRC Grants

§ 1206.40 What types of funding and cost sharing arrangements does the Commission make?

(a) *Types of grants.* (1) *Matching grant.* A matching grant is a way to demonstrate shared Federal/non-Federal support for projects. We will only match funds raised from non-Federal sources, either monies provided by the applicant's own institution specifically for the project or from a non-Federal third-party source.

(2) *Outright grant.* Outright grants are those awards we make without any matching component.

(b) *Cost sharing arrangements.* (1) For publications projects that first received NHPRC funding prior to 1992, the Commission will supply as much as 75 percent of the direct costs.

(2) For publications projects funded after 1992, the Commission will provide no more than 50 percent of direct costs. We will give preference to projects for which the sponsoring institution bears at least 25 percent of the direct costs. For short-term (i.e., 3 years or less) publications projects, we will give preference to applicants that provide at least 50 percent of the project's total direct and indirect costs.

(3) For records projects, the Commission will give preference to projects in which the applicants provide at least 50 percent of the project's total direct and indirect costs.

(4) We prefer the applicant cover indirect costs through cost sharing.

§ 1206.42 Does the Commission ever place conditions on its grants?

In making its decisions on grants, the Commission may place certain conditions on its grants. We describe those possible conditions in the booklet *Grant Guidelines: How to Apply for NHPRC Grants, How to Administer NHPRC Grants.* For a copy, write to NHPRC, National Archives and Records Administration, 700 Pennsylvania Avenue NW, Washington, DC 20408–0001, or contact us by e-mail at *nhprc@nara.gov*.

§ 1206.44 Who may apply for NHPRC grants?

The Commission will consider applications from State and local government agencies (Federal agencies are *not* eligible to apply), U.S. non-profit organizations and institutions, including institutions of higher education, Federally acknowledged or state-recognized Native American tribes or groups, United States citizens applying as individuals rather than for an organization, and State historical records advisory boards. Most NHPRC grants to individuals are awarded under its fellowship programs. In general, we prefer projects operating within a host institution.

§ 1206.46 When are applications due?

The Commission generally meets twice a year, and we consider grant proposals during our meetings. For current application deadlines contact the NHPRC staff or your State historical records coordinators (for records grant proposals). Some State boards have established pre-submission review deadlines for records proposals; further information is available from your State coordinator(s). We will publish deadlines once a year in the FEDERAL REGISTER. All proposals must be postmarked by those deadlines.

§ 1206.48 How do I apply for a grant?

(a) *Contact the NHPRC staff.* We encourage you to discuss your proposal through correspondence, by phone, or in person with Commission staff and/or, in the case of records proposals, with the appropriate State historical records coordinator before you submit the proposal and at all stages of your proposal's development.

(b) *Contact your State Historical Records Advisory Board.*

(1) Contact is not necessary if:

(i) Your proposal is for documentary editing and publication subvention projects;

(ii) You are a Native American applicant; or

(iii) Your project will largely take place in more than one state.

(2) Staff contacts and a list of State historical records coordinators may be found on our Web site at *http://www.nara.gov/nhprc*.

§ 1206.50 What must I provide as a formal grant application?

You must submit the following materials as part of your grant application:

(a) *Application forms.* You can obtain copies of the following application forms from the Commission:

If you are an applicant for . . .	Then you must submit . . .
(1) NHPRC publication and records grants	"Application for Federal Assistance" (Standard Form 424) and "Budget Form" (NA Form 17001; OMB Control Number 3095–0004);

If you are an applicant for . . .	Then you must submit . . .
(2) Subvention grants	NHPRC subvention grant application (OMB Control Number 3095–0021), ''Application for Federal Assistance'' (Standard Form 424) and ''Budget Form'' (NA Form 17001);
(3) Archival or historical documentary editing fellowship host institutions.	NHPRC ''Application for Host Institutions of Archival Administration or Historical Documentary Editing Fellowships'' (OMB Control Number 3095–0015)
(4) NHPRC-sponsored fellowships	''Application for Archival Administration or Historical Documentary Editing Fellowships'' (OMB Control Number 3095–0014);
(5) NHPRC-sponsored editing institute	''Application for Attendance at the Institute for the Editing of Historical Documents'' (OMB Control Number 3095–0012).

(b) *Assurances and certifications.* You must submit the following assurances and certifications, signed by an authorized representative of your institution, or if you are an individual applicant, by you:

(1) ''Assurances—NonBConstruction Programs'' (Standard Form 424B).

(2) ''Certification Regarding Lobbying; Debarment, Suspension and Other Responsibility Matters; and Drug-free Workplace Requirements.''

(c) *Project summary.* You must submit a project summary. A description of the project summary is found in the booklet *Grant Guidelines: How to Apply for NHPRC Grants, How to Administer NHPRC Grants* that is available from the NHPRC and from State historical records coordinators.

(d) *List of performance objectives.* You must list in the proposal from four to seven quantifiable objectives by which the project can be evaluated following the submission of the final report and the closing of the grant. NHPRC evaluates the project to determine whether it produces the results promised in grant applications.

(e) *Submission requirements.* Send the original, signed copy of your application to the NHPRC, National Archives and Records Administration, 700 Pennsylvania Avenue, NW, Washington, DC 20408–0001. Your properly completed application and any materials you send with it (such as pamphlets and photographic prints) will not be returned to you. Additional copies must be sent as follows:

If you are applying for . . .	Then you must send . . .
(1) A documentary editing project that has previously been supported by the Commission.	Two additional copies to the NHPRC;
(2) A subvention grant	Two additional copies to the NHPRC;
(3) A new documentary editing project	Two additional copies to the NHPRC;
(4) A records grant and you are a Native American applicant	Two additional copies to the NHPRC;
(5) A records grant that is being done in a state where there is a State historical records advisory board.	One additional copy to the NHPRC and one copy to the State historical records coordinator. In order to help facilitate the review process, however, it is recommended that applicants send a copy for each member of the state board;
(6) A records grant whose work will take place in more than one State.	Two additional copies to the NHPRC.

§ 1206.52 Who reviews and evaluates grant proposals?

(a) *State boards.* State historical records advisory boards evaluate records proposals on technical merits as well as on their relation to State-plan priorities. The board can return proposals it finds inappropriate or incomplete, with recommendations for revision, on which we will not act unless the applicant submits a revision for consideration in a later cycle. The Board may also recommend that the Commission reject the proposal.

(b) *Peer reviewers.* The NHPRC asks from five to ten external peer reviewers, some of whom may be selected from a list provided by you, to evaluate the proposal if the proposal:

(1) Requests NHPRC funds of $75,000 or more;

(2) Requests a grant period of two years or more;

(3) Involves complex technological processes and issues with which the NHPRC staff may be unfamiliar;

(4) Is a resubmission that the NHPRC invited; or

(5) Is not reviewed by a State historical records advisory board.

(c) *Other reviewers.* We may subject ongoing documentary editions to special review by NHPRC staff and outside specialists, particularly when:

(1) You propose to change the project director/editor;

(2) Your sponsoring institution encounters difficulties or you propose a change in that institution;

(3) Your major search for materials has been completed;

(4) Your project finishes publication in one medium and plans to begin publication in another; or

(5) You change your project's estimate of quantity of publications and/or time needed to complete the project.

(d) *NHPRC staff*. NHPRC staff will analyze the reviewer's comments, State board evaluations, the appropriateness of the project toward Commission goals, the proposal's completeness and conformity to application requirements. The staff will, through a questions letter to you, raise important issues or concerns and allow you the opportunity to respond. The staff will then make recommendations to the Commission.

(e) *The Commission*. After individually reviewing the proposal and recommendations on it from State boards, peer reviewers, and NHPRC staff, Commission members will deliberate on all eligible proposals and recommend to the Archivist of the United States what action to take on each (fund, partially fund, endorse, reject, resubmit, *etc.*). By statute the Archivist chairs the Commission and has final authority to make or deny a grant.

§ 1206.54 What formal notification will I receive, and will it contain other information?

(a) The grant award document is a letter from the Archivist of the United States to you, the grantee. The letter and attachments specify terms of the grant. NHPRC staff notifies project directors informally of awards and any conditions soon after the Commission recommends the grant to the Archivist of the United States. Unsuccessful applicants will be notified within two weeks by letter.

(b) The grant period begins and ends on the dates specified in the award document. Grant periods must begin on the first day of a month and end on the last day of a month.

Subpart F—Grant Administration

§ 1206.60 Who is responsible for administration of NHPRC grants?

The grantee institution and the project director designated by the institution share primary responsibility for the administration of grants. In the case of grants made to individuals, the individual named as project director has primary responsibility for the administration of the grant.

§ 1206.62 Where can I find the regulatory requirements that apply to NHPRC grants?

(a) In addition to this part 1206, NARA has issued other regulations that apply to NHPRC grants in 36 CFR ch. XII, subchapter A. NARA also applies the principles and standards in the following Office of Management and Budget (OMB) Circulars for NHPRC grants:

(1) OMB Circular A–21, ''Cost Principles for Educational Institutions'';

(2) OMB Circular A–87, ''Cost Principles for State, Local and Indian Tribal Governments'';

(3) OMB Circular A–122, ''Cost Principles for Non-Profit Organizations''; and

(4) OMB Circular A–133, ''Audits of States, Local Governments, and Non-Profit Organizations.''

(b) These regulations and circulars are available on our Web site at *www.nara.gov/nhprc*. Our regulations may also be found at *http://www.nara.gov/nara/cfr/subch-a.html*, and OMB Circulars at *http://www.whitehouse.gov/omb/grants/*.

(c) Additional policy guidance related to Title VI of the Civil Rights Act of 1964, regarding persons with limited English proficiency, is provided in our guidelines.

§ 1206.64 When do I need prior written approval for changes to the grant project?

You must obtain prior written approval from the Commission for any changes in the grant project and terms of the grant, including:

(a) Revising the scope or objectives of the project;

(b) Changing the project director or other key project personnel who are specifically named in the grant application or award or related correspondence;

(c) Contracting out, sub-granting, or otherwise obtaining the services of a third party to perform activities central to the purposes of the grant, unless specified in the grant proposal;

(d) Changing the beginning date of the grant or extending the grant period;

(e) Re-budgeting of grants of $100,000 or more, when cumulative transfers among direct cost categories total more than 10 percent of the total project budget (*i.e.*, grant funds plus other funds). With written approval from the Executive Director of the Commission, grantees may adjust the amounts allocated to existing budget lines for both grant funds and cost sharing and may transfer grant funds among existing NHPRC-funded direct cost categories that appear in the final project budget approved by the Commission at the time of the grant award. Cost-sharing funds may also be shifted among existing cost-sharing categories; and

(f) Creating the following new cost categories:

You must obtain approval from . . .	When your new cost category was not in the final approved budget where . . .
(1) The Executive Director of the Commission, or the Executive Director's designee.	(i) such action seems appropriate for the fulfillment of the original purposes of the grant; and (ii) the amount of funds involved does not exceed 10 percent of the amount of the award, or $5,000, whichever is less.
(2) The full Commission	The amount of funds involved exceeds the amount in paragraph (f)(1)(ii) of this section.

§ 1206.66 How do I obtain written approval for changes in my grant project?

(a) You must make all requests for changes in the form of a letter. The grant receiving institution's authorized representative, as indicated on the grant application form (SF 424), must sign the letter. The signed, written response of the Commission's Executive Director, or the Executive Director's designee, will constitute approval for the change.

(b) You must make requests for extension of the grant period not more than two months before the scheduled end of the grant period. We will not allow extensions unless you are up-to-date in your submission of financial and narrative reports.

§ 1206.68 Are there any changes for which I do not need approval?

You do not need approval for re-budgeting of grants of less than $100,000. For such grants:

(a) You may adjust the amounts allocated to existing budget lines for both grant funds and cost sharing;

(b) You may transfer grant funds among existing NHPRC-funded direct cost categories that appear in the final project budget approved by the Commission at the time of the grant award; and

(c) You may also shift cost-sharing funds among existing cost-sharing categories.

§ 1206.70 What reports am I required to make?

(a) Grant recipients are generally required to submit annual financial status reports and semi-annual narrative progress reports, as well as final financial and narrative reports at the conclusion of the grant period. The grant award document will specify the dates your reports are due.

(b) Send the original reports to the NHPRC, National Archives and Records Administration, 700 Pennsylvania Avenue, NW, Washington, DC 20408–0001. One copy of each records project narrative report must be sent to the State historical records coordinator if the board reviewed the proposal. Other records projects should send courtesy copies of narrative reports to State coordinators whose States are involved in or affected by the project. Provide the names of individuals to whom copies of the report have been sent when submitting the original report to the NHPRC.

§ 1206.72 What is the format and content of the financial report?

You must submit financial reports on Standard Form 269 and have them signed by the grantee's authorized representative or by an appropriate institutional fiscal officer. If cost sharing figures are 20 percent less than anticipated in the project budget you must explain the reason for the difference.

§ 1206.74 What is the format and content of the narrative report?

(a) Interim narrative reports should summarize briefly the objectives and activities for the entire grant and then focus on those accomplished during the reporting period. The report should include a summary of project activities; whether the project proceeded on schedule; any revisions of the work plan, staffing pattern, or budget; and any web address created by the project. It should include an analysis of the goals met during the reporting period and any goals for the period that were not accomplished. For documentary editing projects, it also must include information about the publication of volumes and the completion of finding aids, as well as any work that is pending with publishers.

(b) The final report must provide a detailed assessment of the project, following the format in paragraph (a) of this section, including whether the goals set in the original proposal were realistic; whether there were unpredicted results or outcomes; whether the project encountered unexpected problems and how you faced them; and how you could have improved the project. You must discuss the project's impact, if any, on the grant-receiving institution and others. You must indicate whether all or part of the project activities will be continued after the end of the grant, whether any of these activities will be supported by institutional funds or by grant funds, and if the NHPRC grant was instrumental in obtaining these funds.

(c) The project director must sign narrative reports.

§ 1206.76 What additional materials must I submit with the final narrative report?

(a) For records-related projects, you are required to send the NHPRC three copies of

any finding aids, reports, manuals, guides, forms, articles about the project, and other materials produced about or based on the grant project at the time that the final narrative report is submitted.

(b) Documentary editing projects must send the NHPRC three copies of any book edition unless support for their publication was provided by an NHPRC subvention grant. For those volumes, presses rather than projects are responsible for submitting the required number of volumes (see § 1206.18(d)). Projects with microform editions must send the NHPRC three copies of the microform guides and indexes produced by the project.

§ 1206.78 Does the NHPRC have any liability under a grant?

No, the National Archives and Records Administration (NARA) and the Commission cannot assume any liability for accidents, illnesses, or claims arising out of any work undertaken with the assistance of the grant.

§ 1206.80 Must I acknowledge NHPRC grant support?

Yes, grantee institutions, grant project directors, or grant staff personnel may publish results of any work supported by an NHPRC grant without review by the Commission; however, publications or other products resulting from the project must acknowledge the assistance of the NHPRC grant.

PART 1207—UNIFORM ADMINISTRATIVE REQUIREMENTS FOR GRANTS AND COOPERATIVE AGREEMENTS TO STATE AND LOCAL GOVERNMENTS

Subpart A—General

Sec.
1207.1 Purpose and scope of this part.
1207.2 Scope of subpart.
1207.3 Definitions.
1207.4 Applicability.
1207.5 Effect on other issuances.
1207.6 Additions and exceptions.

Subpart B—Pre-Award Requirements

1207.10 Forms for applying for grants.
1207.11 State plans.
1207.12 Special grant or subgrant conditions for ''high-risk'' grantees.

Subpart C—Post-Award Requirements

FINANCIAL ADMINISTRATION

1207.20 Standards for financial management systems.
1207.21 Payment.
1207.22 Allowable costs.
1207.23 Period of availability of funds.
1207.24 Matching or cost sharing.
1207.25 Program income.
1207.26 Non-Federal audit.

CHANGES, PROPERTY, AND SUBAWARDS

1207.30 Changes.
1207.31 Real property.
1207.32 Equipment.
1207.33 Supplies.
1207.34 Copyrights.
1207.35 Subawards to debarred and suspended parties.
1207.36 Procurement.
1207.37 Subgrants.

REPORTS, RECORDS, RETENTION, AND ENFORCEMENT

1207.40 Monitoring and reporting program performance.
1207.41 Financial reporting.
1207.42 Retention and access requirements for records.
1207.43 Enforcement.
1207.44 Termination for convenience.

Subpart D—After-the-Grant Requirements

1207.50 Closeout.
1207.51 Later disallowances and adjustments.
1207.52 Collection of amounts due.

Subpart E—Entitlement [Reserved]

AUTHORITY: 44 U.S.C. 2104(a); 44 U.S.C. 2501–2506.

SOURCE: 53 FR 8072, 8087, Mar. 11, 1988, unless otherwise noted.

Subpart A—General

§ 1207.1 Purpose and scope of this part.

This part establishes uniform administrative rules for Federal grants and cooperative agreements and subawards to State, local and Indian tribal governments.

§ 1207.2 Scope of subpart.

This subpart contains general rules pertaining to this part and procedures for control of exceptions from this part.

§ 1207.3 Definitions.

As used in this part:

Accrued expenditures mean the charges incurred by the grantee during a given period requiring the provision of funds for: (1) Goods and other tangible property received; (2) services

performed by employees, contractors, subgrantees, subcontractors, and other payees; and (3) other amounts becoming owed under programs for which no current services or performance is required, such as annuities, insurance claims, and other benefit payments.

Accrued income means the sum of: (1) Earnings during a given period from services performed by the grantee and goods and other tangible property delivered to purchasers, and (2) amounts becoming owed to the grantee for which no current services or performance is required by the grantee.

Acquisition cost of an item of purchased equipment means the net invoice unit price of the property including the cost of modifications, attachments, accessories, or auxiliary apparatus necessary to make the property usable for the purpose for which it was acquired. Other charges such as the cost of installation, transportation, taxes, duty or protective in-transit insurance, shall be included or excluded from the unit acquisition cost in accordance with the grantee's regular accounting practices.

Administrative requirements mean those matters common to grants in general, such as financial management, kinds and frequency of reports, and retention of records. These are distinguished from *programmatic* requirements, which concern matters that can be treated only on a program-by-program or grant-by-grant basis, such as kinds of activities that can be supported by grants under a particular program.

Awarding agency means (1) with respect to a grant, the Federal agency, and (2) with respect to a subgrant, the party that awarded the subgrant.

Cash contributions means the grantee's cash outlay, including the outlay of money contributed to the grantee or subgrantee by other public agencies and institutions, and private organizations and individuals. When authorized by Federal legislation, Federal funds received from other assistance agreements may be considered as grantee or subgrantee cash contributions.

Contract means (except as used in the definitions for *grant* and *subgrant* in this section and except where qualified by *Federal*) a procurement contract under a grant or subgrant, and means a procurement subcontract under a contract.

Cost sharing or matching means the value of the third party in-kind contributions and the portion of the costs of a federally assisted project or program not borne by the Federal Government.

Cost-type contract means a contract or subcontract under a grant in which the contractor or subcontractor is paid on the basis of the costs it incurs, with or without a fee.

Equipment means tangible, nonexpendable, personal property having a useful life of more than one year and an acquisition cost of $5,000 or more per unit. A grantee may use its own definition of equipment provided that such definition would at least include all equipment defined above.

Expenditure report means: (1) For nonconstruction grants, the SF–269 ''Financial Status Report'' (or other equivalent report); (2) for construction grants, the SF–271 ''Outlay Report and Request for Reimbursement'' (or other equivalent report).

Federally recognized Indian tribal government means the governing body or a governmental agency of any Indian tribe, band, nation, or other organized group or community (including any Native village as defined in section 3 of the Alaska Native Claims Settlement Act, 85 Stat 688) certified by the Secretary of the Interior as eligible for the special programs and services provided by him through the Bureau of Indian Affairs.

Government means a State or local government or a federally recognized Indian tribal government.

Grant means an award of financial assistance, including cooperative agreements, in the form of money, or property in lieu of money, by the Federal Government to an eligible grantee. The term does not include technical assistance which provides services instead of money, or other assistance in the form of revenue sharing, loans, loan guarantees, interest subsidies, insurance, or direct appropriations. Also, the term does not include assistance, such as a fellowship or other lump sum award, which the grantee is not required to account for.

Grantee means the government to which a grant is awarded and which is accountable for the use of the funds provided. The grantee is the entire legal entity even if only a particular component of the entity is designated in the grant award document.

Local government means a county, municipality, city, town, township, local public authority (including any public and Indian housing agency under the United States Housing Act of 1937) school district, special district, intrastate district, council of governments (whether or not incorporated as a nonprofit corporation under state law), any other regional or interstate government entity, or any agency or instrumentality of a local government.

Obligations means the amounts of orders placed, contracts and subgrants awarded, goods and services received, and similar transactions during a given period that will require payment by the grantee during the same or a future period.

OMB means the United States Office of Management and Budget.

Outlays (expenditures) mean charges made to the project or program. They may be reported on a cash or accrual basis. For reports prepared on a cash basis, outlays are the sum of actual cash disbursement for direct charges for goods and services, the amount of indirect expense incurred, the value of in-kind contributions applied, and the amount of cash advances and payments made to contractors and subgrantees. For reports prepared on an accrued expenditure basis, outlays are the sum of actual cash disbursements, the amount of indirect expense incurred, the value of inkind contributions applied, and the new increase (or decrease) in the amounts owed by the grantee for goods and other property received, for services performed by employees, contractors, subgrantees, subcontractors, and other payees, and other amounts becoming owed under programs for which no current services or performance are required, such as annuities, insurance claims, and other benefit payments.

Percentage of completion method refers to a system under which payments are made for construction work according to the percentage of completion of the work, rather than to the grantee's cost incurred.

Prior approval means documentation evidencing consent prior to incurring specific cost.

Real property means land, including land improvements, structures and appurtenances thereto, excluding movable machinery and equipment.

Share, when referring to the awarding agency's portion of real property, equipment or supplies, means the same percentage as the awarding agency's portion of the acquiring party's total costs under the grant to which the acquisition costs under the grant to which the acquisition cost of the property was charged. Only costs are to be counted—not the value of third-party in-kind contributions.

State means any of the several States of the United States, the District of Columbia, the Commonwealth of Puerto Rico, any territory or possession of the United States, or any agency or instrumentality of a State exclusive of local governments. The term does not include any public and Indian housing agency under United States Housing Act of 1937.

Subgrant means an award of financial assistance in the form of money, or property in lieu of money, made under a grant by a grantee to an eligible subgrantee. The term includes financial assistance when provided by contractual legal agreement, but does not include procurement purchases, nor does it include any form of assistance which is excluded from the definition of *grant* in this part.

Subgrantee means the government or other legal entity to which a subgrant is awarded and which is accountable to the grantee for the use of the funds provided.

Supplies means all tangible personal property other than *equipment* as defined in this part.

Suspension means depending on the context, either (1) temporary withdrawal of the authority to obligate grant funds pending corrective action by the grantee or subgrantee or a decision to terminate the grant, or (2) an action taken by a suspending official in accordance with agency regulations

implementing E.O. 12549 to immediately exclude a person from participating in grant transactions for a period, pending completion of an investigation and such legal or debarment proceedings as may ensue.

Termination means permanent withdrawal of the authority to obligate previously-awarded grant funds before that authority would otherwise expire. It also means the voluntary relinquishment of that authority by the grantee or subgrantee. *Termination* does not include: (1) Withdrawal of funds awarded on the basis of the grantee's underestimate of the unobligated balance in a prior period; (2) withdrawal of the unobligated balance as of the expiration of a grant; (3) refusal to extend a grant or award additional funds, to make a competing or noncompeting continuation, renewal, extension, or supplemental award; or (4) voiding of a grant upon determination that the award was obtained fraudulently, or was otherwise illegal or invalid from inception.

Terms of a grant or subgrant mean all requirements of the grant or subgrant, whether in statute, regulations, or the award document.

Third party in-kind contributions mean property or services which benefit a federally assisted project or program and which are contributed by non-Federal third parties without charge to the grantee, or a cost-type contractor under the grant agreement.

Unliquidated obligations for reports prepared on a cash basis mean the amount of obligations incurred by the grantee that has not been paid. For reports prepared on an accrued expenditure basis, they represent the amount of obligations incurred by the grantee for which an outlay has not been recorded.

Unobligated balance means the portion of the funds authorized by the Federal agency that has not been obligated by the grantee and is determined by deducting the cumulative obligations from the cumulative funds authorized.

§ 1207.4 Applicability.

(a) *General.* Subparts A through D of this part apply to all grants and subgrants to governments, except where inconsistent with Federal statutes or with regulations authorized in accordance with the exception provision of § 1207.6, or:

(1) Grants and subgrants to State and local institutions of higher education or State and local hospitals.

(2) The block grants authorized by the Omnibus Budget Reconciliation Act of 1981 (Community Services; Preventive Health and Health Services; Alcohol, Drug Abuse, and Mental Health Services; Maternal and Child Health Services; Social Services; Low-Income Home Energy Assistance; States' Program of Community Development Block Grants for Small Cities; and Elementary and Secondary Education other than programs administered by the Secretary of Education under title V, subtitle D, chapter 2, section 583—the Secretary's discretionary grant program) and titles I–III of the Job Training Partnership Act of 1982 and under the Public Health Services Act (section 1921), Alcohol and Drug Abuse Treatment and Rehabilitation Block Grant and part C of title V, Mental Health Service for the Homeless Block Grant).

(3) Entitlement grants to carry out the following programs of the Social Security Act:

(i) Aid to Needy Families with Dependent Children (title IV–A of the Act, not including the Work Incentive Program (WIN) authorized by section 402(a)19(G); HHS grants for WIN are subject to this part);

(ii) Child Support Enforcement and Establishment of Paternity (title IV–D of the Act);

(iii) Foster Care and Adoption Assistance (title IV–E of the Act);

(iv) Aid to the Aged, Blind, and Disabled (titles I, X, XIV, and XVI–AABD of the Act); and

(v) Medical Assistance (Medicaid) (title XIX of the Act) not including the State Medicaid Fraud Control program authorized by section 1903(a)(6)(B).

(4) Entitlement grants under the following programs of The National School Lunch Act:

(i) School Lunch (section 4 of the Act),

(ii) Commodity Assistance (section 6 of the Act),

(iii) Special Meal Assistance (section 11 of the Act),

(iv) Summer Food Service for Children (section 13 of the Act), and

(v) Child Care Food Program (section 17 of the Act).

(5) Entitlement grants under the following programs of The Child Nutrition Act of 1966:

(i) Special Milk (section 3 of the Act), and

(ii) School Breakfast (section 4 of the Act).

(6) Entitlement grants for State Administrative expenses under The Food Stamp Act of 1977 (section 16 of the Act).

(7) A grant for an experimental, pilot, or demonstration project that is also supported by a grant listed in paragraph (a)(3) of this section;

(8) Grant funds awarded under subsection 412(e) of the Immigration and Nationality Act (8 U.S.C. 1522(e)) and subsection 501(a) of the Refugee Education Assistance Act of 1980 (Pub. L. 96–422, 94 Stat. 1809), for cash assistance, medical assistance, and supplemental security income benefits to refugees and entrants and the administrative costs of providing the assistance and benefits;

(9) Grants to local education agencies under 20 U.S.C. 236 through 241–1(a), and 242 through 244 (portions of the Impact Aid program), except for 20 U.S.C. 238(d)(2)(c) and 240(f) (Entitlement Increase for Handicapped Children); and

(10) Payments under the Veterans Administration's State Home Per Diem Program (38 U.S.C. 641(a)).

(b) *Entitlement programs.* Entitlement programs enumerated above in § 1207.4(a) (3) through (8) are subject to subpart E.

§ 1207.5 Effect on other issuances.

All other grants administration provisions of codified program regulations, program manuals, handbooks and other nonregulatory materials which are inconsistent with this part are superseded, except to the extent they are required by statute, or authorized in accordance with the exception provision in § 1207.6.

§ 1207.6 Additions and exceptions

(a) For classes of grants and grantees subject to this part, Federal agencies may not impose additional administrative requirements except in codified regulations published in the FEDERAL REGISTER.

(b) Exceptions for classes of grants or grantees may be authorized only by OMB.

(c) Exceptions on a case-by-case basis and for subgrantees may be authorized by the affected Federal agencies.

Subpart B—Pre-Award Requirements

§ 1207.10 Forms for applying for grants.

(a) *Scope.* (1) This section prescribes forms and instructions to be used by governmental organizations (except hospitals and institutions of higher education operated by a government) in applying for grants. This section is not applicable, however, to formula grant programs which do not require applicants to apply for funds on a project basis.

(2) This section applies only to applications to Federal agencies for grants, and is not required to be applied by grantees in dealing with applicants for subgrants. However, grantees are encouraged to avoid more detailed or burdensome application requirements for subgrants.

(b) *Authorized forms and instructions for governmental organizations.* (1) In applying for grants, applicants shall only use standard application forms or those prescribed by the granting agency with the approval of OMB under the Paperwork Reduction Act of 1980.

(2) Applicants are not required to submit more than the original and two copies of preapplications or applications.

(3) Applicants must follow all applicable instructions that bear OMB clearance numbers. Federal agencies may specify and describe the programs, functions, or activities that will be used to plan, budget, and evaluate the work under a grant. Other supplementary instructions may be issued only with the approval of OMB to the extent required under the Paperwork Reduction Act of 1980. For any standard form, except the SF–424 facesheet, Federal agencies may shade out or instruct the applicant to disregard any line item that is not needed.

(4) When a grantee applies for additional funding (such as a continuation or supplemental award) or amends a previously submitted application, only the affected pages need be submitted. Previously submitted pages with information that is still current need not be resubmitted.

§ 1207.11 State plans.

(a) *Scope*. The statutes for some programs require States to submit plans before receiving grants. Under regulations implementing Executive Order 12372, ''Intergovernmental Review of Federal Programs,'' States are allowed to simplify, consolidate and substitute plans. This section contains additional provisions for plans that are subject to regulations implementing the Executive order.

(b) *Requirements*. A State need meet only Federal administrative or programmatic requirements for a plan that are in statutes or codified regulations.

(c) *Assurances*. In each plan the State will include an assurance that the State shall comply with all applicable Federal statutes and regulations in effect with respect to the periods for which it receives grant funding. For this assurance and other assurances required in the plan, the State may:

(1) Cite by number the statutory or regulatory provisions requiring the assurances and affirm that it gives the assurances required by those provisions,

(2) Repeat the assurance language in the statutes or regulations, or

(3) Develop its own language to the extent permitted by law.

(d) *Amendments*. A State will amend a plan whenever necessary to reflect: (1) New or revised Federal statutes or regulations or (2) a material change in any State law, organization, policy, or State agency operation. The State will obtain approval for the amendment and its effective date but need submit for approval only the amended portions of the plan.

§ 1207.12 Special grant or subgrant conditions for "high-risk" grantees.

(a) A grantee or subgrantee may be considered ''high risk'' if an awarding agency determines that a grantee or subgrantee:

(1) Has a history of unsatisfactory performance, or

(2) Is not financially stable, or

(3) Has a management system which does not meet the management standards set forth in this part, or

(4) Has not conformed to terms and conditions of previous awards, or

(5) Is otherwise not responsible; and if the awarding agency determines that an award will be made, special conditions and/or restrictions shall correspond to the high risk condition and shall be included in the award.

(b) Special conditions or restrictions may include:

(1) Payment on a reimbursement basis;

(2) Withholding authority to proceed to the next phase until receipt of evidence of acceptable performance within a given funding period;

(3) Requiring additional, more detailed financial reports;

(4) Additional project monitoring;

(5) Requiring the grante or subgrantee to obtain technical or management assistance; or

(6) Establishing additional prior approvals.

(c) If an awarding agency decides to impose such conditions, the awarding official will notify the grantee or subgrantee as early as possible, in writing, of:

(1) The nature of the special conditions/restrictions;

(2) The reason(s) for imposing them;

(3) The corrective actions which must be taken before they will be removed and the time allowed for completing the corrective actions and

(4) The method of requesting reconsideration of the conditions/restrictions imposed.

Subpart C—Post-Award Requirements

FINANCIAL ADMINISTRATION

§ 1207.20 Standards for financial management systems.

(a) A State must expand and account for grant funds in accordance with State laws and procedures for expending and accounting for its own funds.

Fiscal control and accounting procedures of the State, as well as its subgrantees and cost-type contractors, must be sufficient to—

(1) Permit preparation of reports required by this part and the statutes authorizing the grant, and

(2) Permit the tracing of funds to a level of expenditures adequate to establish that such funds have not been used in violation of the restrictions and prohibitions of applicable statutes.

(b) The financial management systems of other grantees and subgrantees must meet the following standards:

(1) *Financial reporting*. Accurate, current, and complete disclosure of the financial results of financially assisted activities must be made in accordance with the financial reporting requirements of the grant or subgrant.

(2) *Accounting records*. Grantees and subgrantees must maintain records which adequately identify the source and application of funds provided for financially-assisted activities. These records must contain information pertaining to grant or subgrant awards and authorizations, obligations, unobligated balances, assets, liabilities, outlays or expenditures, and income.

(3) *Internal control*. Effective control and accountability must be maintained for all grant and subgrant cash, real and personal property, and other assets. Grantees and subgrantees must adequately safeguard all such property and must assure that it is used solely for authorized purposes.

(4) *Budget control*. Actual expenditures or outlays must be compared with budgeted amounts for each grant or subgrant. Financial information must be related to performance or productivity data, including the development of unit cost information whenever appropriate or specifically required in the grant or subgrant agreement. If unit cost data are required, estimates based on available documentation will be accepted whenever possible.

(5) *Allowable cost*. Applicable OMB cost principles, agency program regulations, and the terms of grant and subgrant agreements will be followed in determining the reasonableness, allowability, and allocability of costs.

(6) *Source documentation*. Accounting records must be supported by such source documentation as cancelled checks, paid bills, payrolls, time and attendance records, contract and subgrant award documents, etc.

(7) *Cash management*. Procedures for minimizing the time elapsing between the transfer of funds from the U.S. Treasury and disbursement by grantees and subgrantees must be followed whenever advance payment procedures are used. Grantees must establish reasonable procedures to ensure the receipt of reports on subgrantees' cash balances and cash disbursements in sufficient time to enable them to prepare complete and accurate cash transactions reports to the awarding agency. When advances are made by letter-of-credit or electronic transfer of funds methods, the grantee must make drawdowns as close as possible to the time of making disbursements. Grantees must monitor cash drawdowns by their subgrantees to assure that they conform substantially to the same standards of timing and amount as apply to advances to the grantees.

(c) An awarding agency may review the adequacy of the financial management system of any applicant for financial assistance as part of a preaward review or at any time subsequent to award.

§ 1207.21 Payment.

(a) *Scope*. This section prescribes the basic standard and the methods under which a Federal agency will make payments to grantees, and grantees will make payments to subgrantees and contractors.

(b) *Basic standard*. Methods and procedures for payment shall minimize the time elapsing between the transfer of funds and disbursement by the grantee or subgrantee, in accordance with Treasury regulations at 31 CFR part 205.

(c) *Advances*. Grantees and subgrantees shall be paid in advance, provided they maintain or demonstrate the willingness and ability to maintain procedures to minimize the time elapsing between the transfer of the funds and their disbursement by the grantee or subgrantee.

(d) *Reimbursement*. Reimbursement shall be the preferred method when the requirements in paragraph (c) of this section are not met. Grantees and subgrantees may also be paid by reimbursement for any construction grant. Except as otherwise specified in regulation, Federal agencies shall not use the percentage of completion method to pay construction grants. The grantee or subgrantee may use that method to pay its construction contractor, and if it does, the awarding agency's payments to the grantee or subgrantee will be based on the grantee's or subgrantee's actual rate of disbursement.

(e) *Working capital advances*. If a grantee cannot meet the criteria for advance payments described in paragraph (c) of this section, and the Federal agency has determined that reimbursement is not feasible because the grantee lacks sufficient working capital, the awarding agency may provide cash or a working capital advance basis. Under this procedure the awarding agency shall advance cash to the grantee to cover its estimated disbursement needs for an initial period generally geared to the grantee's disbursing cycle. Thereafter, the awarding agency shall reimburse the grantee for its actual cash disbursements. The working capital advance method of payment shall not be used by grantees or subgrantees if the reason for using such method is the unwillingness or inability of the grantee to provide timely advances to the subgrantee to meet the subgrantee's actual cash disbursements.

(f) *Effect of program income, refunds, and audit recoveries on payment*. (1) Grantees and subgrantees shall disburse repayments to and interest earned on a revolving fund before requesting additional cash payments for the same activity.

(2) Except as provided in paragraph (f)(1) of this section, grantees and subgrantees shall disburse program income, rebates, refunds, contract settlements, audit recoveries and interest earned on such funds before requesting additional cash payments.

(g) *Withholding payments*. (1) Unless otherwise required by Federal statute, awarding agencies shall not withhold payments for proper charges incurred by grantees or subgrantees unless—

(i) The grantee or subgrantee has failed to comply with grant award conditions or

(ii) The grantee or subgrantee is indebted to the United States.

(2) Cash withheld for failure to comply with grant award condition, but without suspension of the grant, shall be released to the grantee upon subsequent compliance. When a grant is suspended, payment adjustments will be made in accordance with § 1207.43(c).

(3) A Federal agency shall not make payment to grantees for amounts that are withheld by grantees or subgrantees from payment to contractors to assure satisfactory completion of work. Payments shall be made by the Federal agency when the grantees or subgrantees actually disburse the withheld funds to the contractors or to escrow accounts established to assure satisfactory completion of work.

(h) *Cash depositories*. (1) Consistent with the national goal of expanding the opportunities for minority business enterprises, grantees and subgrantees are encouraged to use minority banks (a bank which is owned at least 50 percent by minority group members). A list of minority owned banks can be obtained from the Minority Business Development Agency, Department of Commerce, Washington, DC 20230.

(2) A grantee or subgrantee shall maintain a separate bank account only when required by Federal-State agreement.

(i) *Interest earned on advances*. Except for interest earned on advances of funds exempt under the Intergovernmental Cooperation Act (31 U.S.C. 6501 et seq.) and the Indian Self-Determination Act (23 U.S.C. 450), grantees and subgrantees shall promptly, but at least quarterly, remit interest earned on advances to the Federal agency. The grantee or subgrantee may keep interest amounts up to $100 per year for administrative expenses.

§ 1207.22 Allowable costs.

(a) *Limitation on use of funds*. Grant funds may be used only for:

(1) The allowable costs of the grantees, subgrantees and cost-type contractors, including allowable costs in the

form of payments to fixed-price contractors; and

(2) Reasonable fees or profit to cost-type contractors but not any fee or profit (or other increment above allowable costs) to the grantee or subgrantee.

(b) *Applicable cost principles*. For each kind of organization, there is a set of Federal principles for determining allowable costs. Allowable costs will be determined in accordance with the cost principles applicable to the organization incurring the costs. The following chart lists the kinds of organizations and the applicable cost principles.

For the costs of a—	Use the principles in—
State, local or Indian tribal government.	OMB Circular A–87.
Private nonprofit organization other than an (1) institution of higher education, (2) hospital, or (3) organization named in OMB Circular A–122 as not subject to that circular.	OMB Circular A–122.
Educational institutions.	OMB Circular A–21.
For-profit organization other than a hospital and an organization named in OBM Circular A–122 as not subject to that circular.	48 CFR part 31. Contract Cost Principles and Procedures, or uniform cost accounting standards that comply with cost principles acceptable to the Federal agency.

§ 1207.23 Period of availability of funds.

(a) *General*. Where a funding period is specified, a grantee may charge to the award only costs resulting from obligations of the funding period unless carryover of unobligated balances is permitted, in which case the carryover balances may be charged for costs resulting from obligations of the subsequent funding period.

(b) *Liquidation of obligations*. A grantee must liquidate all obligations incurred under the award not later than 90 days after the end of the funding period (or as specified in a program regulation) to coincide with the submission of the annual Financial Status Report (SF–269). The Federal agency may extend this deadline at the request of the grantee.

§ 1207.24 Matching or cost sharing.

(a) *Basic rule: Costs and contributions acceptable*. With the qualifications and exceptions listed in paragraph (b) of this section, a matching or cost sharing requirement may be satisfied by either or both of the following:

(1) Allowable costs incurred by the grantee, subgrantee or a cost-type contractor under the assistance agreement. This includes allowable costs borne by non-Federal grants or by others cash donations from non-Federal third parties.

(2) The value of third party in-kind contributions applicable to the period to which the cost sharing or matching requirements applies.

(b) *Qualifications and exceptions*—(1) *Costs borne by other Federal grant agreements*. Except as provided by Federal statute, a cost sharing or matching requirement may not be met by costs borne by another Federal grant. This prohibition does not apply to income earned by a grantee or subgrantee from a contract awarded under another Federal grant.

(2) *General revenue sharing*. For the purpose of this section, general revenue sharing funds distributed under 31 U.S.C. 6702 are not considered Federal grant funds.

(3) *Cost or contributions counted towards other Federal costs-sharing requirements*. Neither costs nor the values of third party in-kind contributions may count towards satisfying a cost sharing or matching requirement of a grant agreement if they have been or will be counted towards satisfying a cost sharing or matching requirement of another Federal grant agreement, a Federal procurement contract, or any other award of Federal funds.

(4) *Costs financed by program income*. Costs financed by program income, as defined in § 1207.25, shall not count towards satisfying a cost sharing or matching requirement unless they are expressly permitted in the terms of the assistance agreement. (This use of general program income is described in § 1207.25(g).)

(5) *Services or property financed by income earned by contractors*. Contractors under a grant may earn income from the activities carried out under the contract in addition to the amounts earned from the party awarding the contract. No costs of services or property supported by this income may count toward satisfying a cost sharing

or matching requirement unless other provisions of the grant agreement expressly permit this kind of income to be used to meet the requirement.

(6) *Records.* Costs and third party in-kind contributions counting towards satisfying a cost sharing or matching requirement must be verifiable from the records of grantees and subgrantee or cost-type contractors. These records must show how the value placed on third party in-kind contributions was derived. To the extent feasible, volunteer services will be supported by the same methods that the organization uses to support the allocability of regular personnel costs.

(7) *Special standards for third party in-kind contributions.* (i) Third party in-kind contributions count towards satisfying a cost sharing or matching requirement only where, if the party receiving the contributions were to pay for them, the payments would be allowable costs.

(ii) Some third party in-kind contributions are goods and services that, if the grantee, subgrantee, or contractor receiving the contribution had to pay for them, the payments would have been an indirect costs. Costs sharing or matching credit for such contributions shall be given only if the grantee, subgrantee, or contractor has established, along with its regular indirect cost rate, a special rate for allocating to individual projects or programs the value of the contributions.

(iii) A third party in-kind contribution to a fixed-price contract may count towards satisfying a cost sharing or matching requirement only if it results in:

(A) An increase in the services or property provided under the contract (without additional cost to the grantee or subgrantee) or

(B) A cost savings to the grantee or subgrantee.

(iv) The values placed on third party in-kind contributions for cost sharing or matching purposes will conform to the rules in the succeeding sections of this part. If a third party in-kind contribution is a type not treated in those sections, the value placed upon it shall be fair and reasonable.

(c) *Valuation of donated services*—(1) *Volunteer services.* Unpaid services provided to a grantee or subgrantee by individuals will be valued at rates consistent with those ordinarily paid for similar work in the grantee's or subgrantee's organization. If the grantee or subgrantee does not have employees performing similar work, the rates will be consistent with those ordinarily paid by other employers for similar work in the same labor market. In either case, a reasonable amount for fringe benefits may be included in the valuation.

(2) *Employees of other organizations.* When an employer other than a grantee, subgrantee, or cost-type contractor furnishes free of charge the services of an employee in the employee's normal line of work, the services will be valued at the employee's regular rate of pay exclusive of the employee's fringe benefits and overhead costs. If the services are in a different line of work, paragraph (c)(1) of this section applies.

(d) *Valuation of third party donated supplies and loaned equipment or space.* (1) If a third party donates supplies, the contribution will be valued at the market value of the supplies at the time of donation.

(2) If a third party donates the use of equipment or space in a building but retains title, the contribution will be valued at the fair rental rate of the equipment or space.

(e) *Valuation of third party donated equipment, buildings, and land.* If a third party donates equipment, buildings, or land, and title passes to a grantee or subgrantee, the treatment of the donated property will depend upon the purpose of the grant or subgrant, as follows:

(1) *Awards for capital expenditures.* If the purpose of the grant or subgrant is to assist the grantee or subgrantee in the acquisition of property, the market value of that property at the time of donation may be counted as cost sharing or matching,

(2) *Other awards.* If assisting in the acquisition of property is not the purpose of the grant or subgrant, paragraphs (e)(2)(i) and (ii) of this section apply:

(i) If approval is obtained from the awarding agency, the market value at the time of donation of the donated equipment or buildings and the fair

rental rate of the donated land may be counted as cost sharing or matching. In the case of a subgrant, the terms of the grant agreement may require that the approval be obtained from the Federal agency as well as the grantee. In all cases, the approval may be given only if a purchase of the equipment or rental of the land would be approved as an allowable direct cost. If any part of the donated property was acquired with Federal funds, only the non-federal share of the property may be counted as cost-sharing or matching.

(ii) If approval is not obtained under paragraph (e)(2)(i) of this section, no amount may be counted for donated land, and only depreciation or use allowances may be counted for donated equipment and buildings. The depreciation or use allowances for this property are not treated as third party in-kind contributions. Instead, they are treated as costs incurred by the grantee or subgrantee. They are computed and allocated (usually as indirect costs) in accordance with the cost principles specified in § 1207.22, in the same way as depreciation or use allowances for purchased equipment and buildings. The amount of depreciation or use allowances for donated equipment and buildings is based on the property's market value at the time it was donated.

(f) *Valuation of grantee or subgrantee donated real property for construction/acquisition*. If a grantee or subgrantee donates real property for a construction or facilities acquisition project, the current market value of that property may be counted as cost sharing or matching. If any part of the donated property was acquired with Federal funds, only the non-federal share of the property may be counted as cost sharing or matching.

(g) *Appraisal of real property*. In some cases under paragraphs (d), (e) and (f) of this section, it will be necessary to establish the market value of land or a building or the fair rental rate of land or of space in a building. In these cases, the Federal agency may require the market value or fair rental value be set by an independent appraiser, and that the value or rate be certified by the grantee. This requirement will also be imposed by the grantee on subgrantees.

§ 1207.25 Program income.

(a) *General*. Grantees are encouraged to earn income to defray program costs. Program income includes income from fees for services performed, from the use or rental of real or personal property acquired with grant funds, from the sale of commodities or items fabricated under a grant agreement, and from payments of principal and interest on loans made with grant funds. Except as otherwise provided in regulations of the Federal agency, program income does not include interest on grant funds, rebates, credits, discounts, refunds, etc. and interest earned on any of them.

(b) *Definition of program income*. Program income means gross income received by the grantee or subgrantee directly generated by a grant supported activity, or earned only as a result of the grant agreement during the grant period. ''During the grant period'' is the time between the effective date of the award and the ending date of the award reflected in the final financial report.

(c) *Cost of generating program income*. If authorized by Federal regulations or the grant agreement, costs incident to the generation of program income may be deducted from gross income to determine program income.

(d) *Governmental revenues*. Taxes, special assessments, levies, fines, and other such revenues raised by a grantee or subgrantee are not program income unless the revenues are specifically identified in the grant agreement or Federal agency regulations as program income.

(e) *Royalties*. Income from royalties and license fees for copyrighted material, patents, and inventions developed by a grantee or subgrantee is program income only if the revenues are specifically identified in the grant agreement or Federal agency regulations as program income. (See § 1207.34.)

(f) *Property*. Proceeds from the sale of real property or equipment will be handled in accordance with the requirements of §§ 1207.31 and 1207.32.

(g) *Use of program income*. Program income shall be deducted from outlays which may be both Federal and non-Federal as described below, unless the Federal agency regulations or the

grant agreement specify another alternative (or a combination of the alternatives). In specifying alternatives, the Federal agency may distinguish between income earned by the grantee and income earned by subgrantees and between the sources, kinds, or amounts of income. When Federal agencies authorize the alternatives in paragraphs (g) (2) and (3) of this section, program income in excess of any limits stipulated shall also be deducted from outlays.

(1) *Deduction.* Ordinarily program income shall be deducted from total allowable costs to determine the net allowable costs. Program income shall be used for current costs unless the Federal agency authorizes otherwise. Program income which the grantee did not anticipate at the time of the award shall be used to reduce the Federal agency and grantee contributions rather than to increase the funds committed to the project.

(2) *Addition.* When authorized, program income may be added to the funds committed to the grant agreement by the Federal agency and the grantee. The program income shall be used for the purposes and under the conditions of the grant agreement.

(3) *Cost sharing or matching.* When authorized, program income may be used to meet the cost sharing or matching requirement of the grant agreement. The amount of the Federal grant award remains the same.

(h) *Income after the award period.* There are no Federal requirements governing the disposition of program income earned after the end of the award period (i.e., until the ending date of the final financial report, see paragraph (a) of this section), unless the terms of the agreement or the Federal agency regulations provide otherwise.

§ 1207.26 Non-Federal audit.

(a) *Basic rule.* Grantees and subgrantees are responsible for obtaining audits in accordance with the Single Audit Act Amendments of 1996 (31 U.S.C. 7501–7507) and revised OMB Circular A–133, ''Audits of States, Local Governments, and Non-Profit Organizations.'' The audits shall be made by an independent auditor in accordance with generally accepted government auditing standards covering financial audits.

(b) *Subgrantees.* State or local governments, as those terms are defined for purposes of the Single Audit Act Amendments of 1996, that provide Federal awards to a subgrantee, which expends $300,000 or more (or other amount as specified by OMB) in Federal awards in a fiscal year, shall:

(1) Determine whether State or local subgrantees have met the audit requirements of the Act and whether subgrantees covered by OMB Circular A–110, ''Uniform Administrative Requirements for Grants and Agreements with Institutions of Higher Education, Hospitals, and Other Non-Profit Organizations,'' have met the audit requirements of the Act. Commercial contractors (private for-profit and private and governmental organizations) providing goods and services to State and local governments are not required to have a single audit performed. State and local governments should use their own procedures to ensure that the contractor has complied with laws and regulations affecting the expenditure of Federal funds;

(2) Determine whether the subgrantee spent Federal assistance funds provided in accordance with applicable laws and regulations. This may be accomplished by reviewing an audit of the subgrantee made in accordance with the Act, Circular A–110, or through other means (e.g., program reviews) if the subgrantee has not had such an audit;

(3) Ensure that appropriate corrective action is taken within six months after receipt of the audit report in instance of noncompliance with Federal laws and regulations;

(4) Consider whether subgrantee audits necessitate adjustment of the grantee's own records; and

(5) Require each subgrantee to permit independent auditors to have access to the records and financial statements.

(c) *Auditor selection.* In arranging for audit services, § 1207.36 shall be followed.

[53 FR 8072, 8087, Mar. 11, 1988, as amended at 62 FR 45939, 45943, Aug. 29, 1997]

CHANGES, PROPERTY, AND SUBAWARDS

§ 1207.30 Changes.

(a) *General.* Grantees and subgrantees are permitted to rebudget within the approved direct cost budget to meet unanticipated requirements and may make limited program changes to the approved project. However, unless waived by the awarding agency, certain types of post-award changes in budgets and projects shall require the prior written approval of the awarding agency.

(b) *Relation to cost principles.* The applicable cost principles (see § 1207.22) contain requirements for prior approval of certain types of costs. Except where waived, those requirements apply to all grants and subgrants even if paragraphs (c) through (f) of this section do not.

(c) *Budget changes*—(1) *Nonconstruction projects.* Except as stated in other regulations or an award document, grantees or subgrantees shall obtain the prior approval of the awarding agency whenever any of the following changes is anticipated under a nonconstruction award:

(i) Any revision which would result in the need for additional funding.

(ii) Unless waived by the awarding agency, cumulative transfers among direct cost categories, or, if applicable, among separately budgeted programs, projects, functions, or activities which exceed or are expected to exceed ten percent of the current total approved budget, whenever the awarding agency's share exceeds $100,000.

(iii) Transfer of funds allotted for training allowances (i.e., from direct payments to trainees to other expense categories).

(2) *Construction projects.* Grantees and subgrantees shall obtain prior written approval for any budget revision which would result in the need for additional funds.

(3) *Combined construction and nonconstruction projects.* When a grant or subgrant provides funding for both construction and nonconstruction activities, the grantee or subgrantee must obtain prior written approval from the awarding agency before making any fund or budget transfer from nonconstruction to construction or vice versa.

(d) *Programmatic changes.* Grantees or subgrantees must obtain the prior approval of the awarding agency whenever any of the following actions is anticipated:

(1) Any revision of the scope or objectives of the project (regardless of whether there is an associated budget revision requiring prior approval).

(2) Need to extend the period of availability of funds.

(3) Changes in key persons in cases where specified in an application or a grant award. In research projects, a change in the project director or principal investigator shall always require approval unless waived by the awarding agency.

(4) Under nonconstruction projects, contracting out, subgranting (if authorized by law) or otherwise obtaining the services of a third party to perform activities which are central to the purposes of the award. This approval requirement is in addition to the approval requirements of § 1207.36 but does not apply to the procurement of equipment, supplies, and general support services.

(e) *Additional prior approval requirements.* The awarding agency may not require prior approval for any budget revision which is not described in paragraph (c) of this section.

(f) *Requesting prior approval.* (1) A request for prior approval of any budget revision will be in the same budget formal the grantee used in its application and shall be accompanied by a narrative justification for the proposed revision.

(2) A request for a prior approval under the applicable Federal cost principles (see § 1207.22) may be made by letter.

(3) A request by a subgrantee for prior approval will be addressed in writing to the grantee. The grantee will promptly review such request and shall approve or disapprove the request in writing. A grantee will not approve any budget or project revision which is inconsistent with the purpose or terms and conditions of the Federal grant to the grantee. If the revision, requested by the subgrantee would result in a change to the grantee's approved

project which requires Federal prior approval, the grantee will obtain the Federal agency's approval before approving the subgrantee's request.

§ 1207.31 Real property.

(a) *Title*. Subject to the obligations and conditions set forth in this section, title to real property acquired under a grant or subgrant will vest upon acquisition in the grantee or subgrantee respectively.

(b) *Use*. Except as otherwise provided by Federal statutes, real property will be used for the originally authorized purposes as long as needed for that purposes, and the grantee or subgrantee shall not dispose of or encumber its title or other interests.

(c) *Disposition*. When real property is no longer needed for the originally authorized purpose, the grantee or subgrantee will request disposition instructions from the awarding agency. The instructions will provide for one of the following alternatives:

(1) *Retention of title*. Retain title after compensating the awarding agency. The amount paid to the awarding agency will be computed by applying the awarding agency's percentage of participation in the cost of the original purchase to the fair market value of the property. However, in those situations where a grantee or subgrantee is disposing of real property acquired with grant funds and acquiring replacement real property under the same program, the net proceeds from the disposition may be used as an offset to the cost of the replacement property.

(2) *Sale of property*. Sell the property and compensate the awarding agency. The amount due to the awarding agency will be calculated by applying the awarding agency's percentage of participation in the cost of the original purchase to the proceeds of the sale after deduction of any actual and reasonable selling and fixing-up expenses. If the grant is still active, the net proceeds from sale may be offset against the original cost of the property. When a grantee or subgrantee is directed to sell property, sales procedures shall be followed that provide for competition to the extent practicable and result in the highest possible return.

(3) *Transfer of title*. Transfer title to the awarding agency or to a third-party designated/approved by the awarding agency. The grantee or subgrantee shall be paid an amount calculated by applying the grantee or subgrantee's percentage of participation in the purchase of the real property to the current fair market value of the property.

§ 1207.32 Equipment.

(a) *Title*. Subject to the obligations and conditions set forth in this section, title to equipment acquired under a grant or subgrant will vest upon acquisition in the grantee or subgrantee respectively.

(b) *States*. A State will use, manage, and dispose of equipment acquired under a grant by the State in accordance with State laws and procedures. Other grantees and subgrantees will follow paragraphs (c) through (e) of this section.

(c) *Use*. (1) Equipment shall be used by the grantee or subgrantee in the program or project for which it was acquired as long as needed, whether or not the project or program continues to be supported by Federal funds. When no longer needed for the original program or project, the equipment may be used in other activities currently or previously supported by a Federal agency.

(2) The grantee or subgrantee shall also make equipment available for use on other projects or programs currently or previously supported by the Federal Government, providing such use will not interfere with the work on the projects or program for which it was originally acquired. First preference for other use shall be given to other programs or projects supported by the awarding agency. User fees should be considered if appropriate.

(3) Notwithstanding the encouragement in § 1207.25(a) to earn program income, the grantee or subgrantee must not use equipment acquired with grant funds to provide services for a fee to compete unfairly with private companies that provide equivalent services, unless specifically permitted or contemplated by Federal statute.

(4) When acquiring replacement equipment, the grantee or subgrantee

may use the equipment to be replaced as a trade-in or sell the property and use the proceeds to offset the cost of the replacement property, subject to the approval of the awarding agency.

(d) *Management requirements.* Procedures for managing equipment (including replacement equipment), whether acquired in whole or in part with grant funds, until disposition takes place will, as a minimum, meet the following requirements:

(1) Property records must be maintained that include a description of the property, a serial number or other identification number, the source of property, who holds title, the acquisition date, and cost of the property, percentage of Federal participation in the cost of the property, the location, use and condition of the property, and any ultimate disposition data including the date of disposal and sale price of the property.

(2) A physical inventory of the property must be taken and the results reconciled with the property records at least once every two years.

(3) A control system must be developed to ensure adequate safeguards to prevent loss, damage, or theft of the property. Any loss, damage, or theft shall be investigated.

(4) Adequate maintenance procedures must be developed to keep the property in good condition.

(5) If the grantee or subgrantee is authorized or required to sell the property, proper sales procedures must be established to ensure the highest possible return.

(e) *Disposition.* When original or replacement equipment acquired under a grant or subgrant is no longer needed for the original project or program or for other activities currently or previously supported by a Federal agency, disposition of the equipment will be made as follows:

(1) Items of equipment with a current per-unit fair market value of less than $5,000 may be retained, sold or otherwise disposed of with no further obligation to the awarding agency.

(2) Items of equipment with a current per unit fair market value in excess of $5,000 may be retained or sold and the awarding agency shall have a right to an amount calculated by multiplying the current market value or proceeds from sale by the awarding agency's share of the equipment.

(3) In cases where a grantee or subgrantee fails to take appropriate disposition actions, the awarding agency may direct the grantee or subgrantee to take excess and disposition actions.

(f) *Federal equipment.* In the event a grantee or subgrantee is provided federally-owned equipment:

(1) Title will remain vested in the Federal Government.

(2) Grantees or subgrantees will manage the equipment in accordance with Federal agency rules and procedures, and submit an annual inventory listing.

(3) When the equipment is no longer needed, the grantee or subgrantee will request disposition instructions from the Federal agency.

(g) *Right to transfer title.* The Federal awarding agency may reserve the right to transfer title to the Federal Government or a third part named by the awarding agency when such a third party is otherwise eligible under existing statutes. Such transfers shall be subject to the following standards:

(1) The property shall be identified in the grant or otherwise made known to the grantee in writing.

(2) The Federal awarding agency shall issue disposition instruction within 120 calendar days after the end of the Federal support of the project for which it was acquired. If the Federal awarding agency fails to issue disposition instructions within the 120 calendar-day period the grantee shall follow § 1207.32(e).

(3) When title to equipment is transferred, the grantee shall be paid an amount calculated by applying the percentage of participation in the purchase to the current fair market value of the property.

§ 1207.33 Supplies.

(a) *Title.* Title to supplies acquired under a grant or subgrant will vest, upon acquisition, in the grantee or subgrantee respectively.

(b) *Disposition.* If there is a residual inventory of unused supplies exceeding $5,000 in total aggregate fair market value upon termination or completion of the award, and if the supplies are

not needed for any other federally sponsored programs or projects, the grantee or subgrantee shall compensate the awarding agency for its share.

§ 1207.34 Copyrights.

The Federal awarding agency reserves a royalty-free, nonexclusive, and irrevocable license to reproduce, publish or otherwise use, and to authorize others to use, for Federal Government purposes:

(a) The copyright in any work developed under a grant, subgrant, or contract under a grant or subgrant; and

(b) Any rights of copyright to which a grantee, subgrantee or a contractor purchases ownership with grant support.

§ 1207.35 Subawards to debarred and suspended parties.

Grantees and subgrantees must not make any award or permit any award (subgrant or contract) at any tier to any party which is debarred or suspended or is otherwise excluded from or ineligible for participation in Federal assistance programs under Executive Order 12549, ''Debarment and Suspension.''

§ 1207.36 Procurement.

(a) *States*. When procuring property and services under a grant, a State will follow the same policies and procedures it uses for procurements from its non-Federal funds. The State will ensure that every purchase order or other contract includes any clauses required by Federal statutes and executive orders and their implementing regulations. Other grantees and subgrantees will follow paragraphs (b) through (i) in this section.

(b) *Procurement standards*. (1) Grantees and subgrantees will use their own procurement procedures which reflect applicable State and local laws and regulations, provided that the procurements conform to applicable Federal law and the standards identified in this section.

(2) Grantees and subgrantees will maintain a contract administration system which ensures that contractors perform in accordance with the terms, conditions, and specifications of their contracts or purchase orders.

(3) Grantees and subgrantees will maintain a written code of standards of conduct governing the performance of their employees engaged in the award and administration of contracts. No employee, officer or agent of the grantee or subgrantee shall participate in selection, or in the award or administration of a contract supported by Federal funds if a conflict of interest, real or apparent, would be involved. Such a conflict would arise when:

(i) The employee, officer or agent,

(ii) Any member of his immediate family,

(iii) His or her partner, or

(iv) An organization which employs, or is about to employ, any of the above, has a financial or other interest in the firm selected for award. The grantee's or subgrantee's officers, employees or agents will neither solicit nor accept gratuities, favors or anything of monetary value from contractors, potential contractors, or parties to subagreements. Grantee and subgrantees may set minimum rules where the financial interest is not substantial or the gift is an unsolicited item of nominal intrinsic value. To the extent permitted by State or local law or regulations, such standards or conduct will provide for penalties, sanctions, or other disciplinary actions for violations of such standards by the grantee's and subgrantee's officers, employees, or agents, or by contractors or their agents. The awarding agency may in regulation provide additional prohibitions relative to real, apparent, or potential conflicts of interest.

(4) Grantee and subgrantee procedures will provide for a review of proposed procurements to avoid purchase of unnecessary or duplicative items. Consideration should be given to consolidating or breaking out procurements to obtain a more economical purchase. Where appropriate, an analysis will be made of lease versus purchase alternatives, and any other appropriate analysis to determine the most economical approach.

(5) To foster greater economy and efficiency, grantees and subgrantees are encouraged to enter into State and local intergovernmental agreements

for procurement or use of common goods and services.

(6) Grantees and subgrantees are encouraged to use Federal excess and surplus property in lieu of purchasing new equipment and property whenever such use is feasible and reduces project costs.

(7) Grantees and subgrantees are encouraged to use value engineering clauses in contracts for construction projects of sufficient size to offer reasonable opportunities for cost reductions. Value engineering is a systematic and creative anaylsis of each contract item or task to ensure that its essential function is provided at the overall lower cost.

(8) Grantees and subgrantees will make awards only to responsible contractors possessing the ability to perform successfully under the terms and conditions of a proposed procurement. Consideration will be given to such matters as contractor integrity, compliance with public policy, record of past performance, and financial and technical resources.

(9) Grantees and subgrantees will maintain records sufficient to detail the significant history of a procurement. These records will include, but are not necessarily limited to the following: rationale for the method of procurement, selection of contract type, contractor selection or rejection, and the basis for the contract price.

(10) Grantees and subgrantees will use time and material type contracts only—

(i) After a determination that no other contract is suitable, and

(ii) If the contract includes a ceiling price that the contractor exceeds at its own risk.

(11) Grantees and subgrantees alone will be responsible, in accordance with good administrative practice and sound business judgment, for the settlement of all contractual and administrative issues arising out of procurements. These issues include, but are not limited to source evaluation, protests, disputes, and claims. These standards do not relieve the grantee or subgrantee of any contractual responsibilities under its contracts. Federal agencies will not substitute their judgment for that of the grantee or subgrantee unless the matter is primarily a Federal concern. Violations of law will be referred to the local, State, or Federal authority having proper jurisdiction.

(12) Grantees and subgrantees will have protest procedures to handle and resolve disputes relating to their procurements and shall in all instances disclose information regarding the protest to the awarding agency. A protestor must exhaust all administrative remedies with the grantee and subgrantee before pursuing a protest with the Federal agency. Reviews of protests by the Federal agency will be limited to:

(i) Violations of Federal law or regulations and the standards of this section (violations of State or local law will be under the jurisdiction of State or local authorities) and

(ii) Violations of the grantee's or subgrantee's protest procedures for failure to review a complaint or protest. Protests received by the Federal agency other than those specified above will be referred to the grantee or subgrantee.

(c) *Competition*. (1) All procurement transactions will be conducted in a manner providing full and open competition consistent with the standards of § 1207.36. Some of the situations considered to be restrictive of competition include but are not limited to:

(i) Placing unreasonable requirements on firms in order for them to qualify to do business,

(ii) Requiring unnecessary experience and excessive bonding,

(iii) Noncompetitive pricing practices between firms or between affiliated companies,

(iv) Noncompetitive awards to consultants that are on retainer contracts,

(v) Organizational conflicts of interest,

(vi) Specifying only a ''brand name'' product instead of allowing ''an equal'' product to be offered and describing the performance of other relevant requirements of the procurement, and

(vii) Any arbitrary action in the procurement process.

(2) Grantees and subgrantees will conduct procurements in a manner that prohibits the use of statutorily or administratively imposed in-State or local geographical preferences in the evaluation of bids or proposals, except

in those cases where applicable Federal statutes expressly mandate or encourage geographic preference. Nothing in this section preempts State licensing laws. When contracting for architectural and engineering (A/E) services, geographic location may be a selection criteria provided its application leaves an appropriate number of qualified firms, given the nature and size of the project, to compete for the contract.

(3) Grantees will have written selection procedures for procurement transactions. These procedures will ensure that all solicitations:

(i) Incorporate a clear and accurate description of the technical requirements for the material, product, or service to be procured. Such description shall not, in competitive procurements, contain features which unduly restrict competition. The description may include a statement of the qualitative nature of the material, product or service to be procured, and when necessary, shall set forth those minimum essential characteristics and standards to which it must conform if it is to satisfy its intended use. Detailed product specifications should be avoided if at all possible. When it is impractical or uneconomical to make a clear and accurate description of the technical requirements, a ''brand name or equal'' description may be used as a means to define the performance or other salient requirements of a procurement. The specific features of the named brand which must be met by offerors shall be clearly stated; and

(ii) Identify all requirements which the offerors must fulfill and all other factors to be used in evaluating bids or proposals.

(4) Grantees and subgrantees will ensure that all prequalified lists of persons, firms, or products which are used in acquiring goods and services are current and include enough qualified sources to ensure maximum open and free competition. Also, grantees and subgrantees will not preclude potential bidders from qualifying during the solicitation period.

(d) *Methods of procurement to be followed*—(1) *Procurement by small purchase procedures*. Small purchase procedures are those relatively simple and informal procurement methods for securing services, supplies, or other property that do not cost more than the simplified acquisition threshold fixed at 41 U.S.C. 403(11) (currently set at $100,000). If small purchase procedures are used, price or rate quotations shall be obtained from an adequate number of qualified sources.

(2) Procurement by *sealed bids* (formal advertising). Bids are publicly solicited and a firm-fixed-price contract (lump sum or unit price) is awarded to the responsible bidder whose bid, conforming with all the material terms and conditions of the invitation for bids, is the lowest in price. The sealed bid method is the preferred method for procuring construction, if the conditions in § 1207.36(d)(2)(i) apply.

(i) In order for sealed bidding to be feasible, the following conditions should be present:

(A) A complete, adequate, and realistic specification or purchase description is available;

(B) Two or more responsible bidders are willing and able to compete effectively and for the business; and

(C) The procurement lends itself to a firm fixed price contract and the selection of the successful bidder can be made principally on the basis of price.

(ii) If sealed bids are used, the following requirements apply:

(A) The invitation for bids will be publicly advertised and bids shall be solicited from an adequate number of known suppliers, providing them sufficient time prior to the date set for opening the bids;

(B) The invitation for bids, which will include any specifications and pertinent attachments, shall define the items or services in order for the bidder to properly respond;

(C) All bids will be publicly opened at the time and place prescribed in the invitation for bids;

(D) A firm fixed-price contract award will be made in writing to the lowest responsive and responsible bidder. Where specified in bidding documents, factors such as discounts, transportation cost, and life cycle costs shall be considered in determining which bid is lowest. Payment discounts will only be used to determine the low bid when prior experience indicates that such

discounts are usually taken advantage of; and

(E) Any or all bids may be rejected if there is a sound documented reason.

(3) Procurement by *competitive proposals*. The technique of competitive proposals is normally conducted with more than one source submitting an offer, and either a fixed-price or cost-reimbursement type contract is awarded. It is generally used when conditions are not appropriate for the use of sealed bids. If this method is used, the following requirements apply:

(i) Requests for proposals will be publicized and identify all evaluation factors and their relative importance. Any response to publicized requests for proposals shall be honored to the maximum extent practical;

(ii) Proposals will be solicited from an adequate number of qualified sources;

(iii) Grantees and subgrantees will have a method for conducting technical evaluations of the proposals received and for selecting awardees;

(iv) Awards will be made to the responsible firm whose proposal is most advantageous to the program, with price and other factors considered; and

(v) Grantees and subgrantees may use competitive proposal procedures for qualifications-based procurement of architectural/engineering (A/E) professional services whereby competitors' qualifications are evaluated and the most qualified competitor is selected, subject to negotiation of fair and reasonable compensation. The method, where price is not used as a selection factor, can only be used in procurement of A/E professional services. It cannot be used to purchase other types of services though A/E firms are a potential source to perform the proposed effort.

(4) Procurement by *noncompetitive proposals* is procurement through solicitation of a proposal from only one source, or after solicitation of a number of sources, competition is determined inadequate.

(i) Procurement by noncompetitive proposals may be used only when the award of a contract is infeasible under small purchase procedures, sealed bids or competitive proposals and one of the following circumstances applies:

(A) The item is available only from a single source;

(B) The public exigency or emergency for the requirement will not permit a delay resulting from competitive solicitation;

(C) The awarding agency authorizes noncompetitive proposals; or

(D) After solicitation of a number of sources, competition is determined inadequate.

(ii) Cost analysis, i.e., verifying the proposed cost data, the projections of the data, and the evaluation of the specific elements of costs and profits, is required.

(iii) Grantees and subgrantees may be required to submit the proposed procurement to the awarding agency for pre-award review in accordance with paragraph (g) of this section.

(e) *Contracting with small and minority firms, women's business enterprise and labor surplus area firms.* (1) The grantee and subgrantee will take all necessary affirmative steps to assure that minority firms, women's business enterprises, and labor surplus area firms are used when possible.

(2) Affirmative steps shall include:

(i) Placing qualified small and minority businesses and women's business enterprises on solicitation lists;

(ii) Assuring that small and minority businesses, and women's business enterprises are solicited whenever they are potential sources;

(iii) Dividing total requirements, when economically feasible, into smaller tasks or quantities to permit maximum participation by small and minority business, and women's business enterprises;

(iv) Establishing delivery schedules, where the requirement permits, which encourage participation by small and minority business, and women's business enterprises;

(v) Using the services and assistance of the Small Business Administration, and the Minority Business Development Agency of the Department of Commerce; and

(vi) Requiring the prime contractor, if subcontracts are to be let, to take the affirmative steps listed in paragraphs (e)(2)(i) through (v) of this section.

(f) *Contract cost and price.* (1) Grantees and subgrantees must perform a cost or price analysis in connection with every procurement action including contract modifications. The method and degree of analysis is dependent on the facts surrounding the particular procurement situation, but as a starting point, grantees must make independent estimates before receiving bids or proposals. A cost analysis must be performed when the offeror is required to submit the elements of his estimated cost, e.g., under professional, consulting, and architectural engineering services contracts. A cost analysis will be necessary when adequate price competition is lacking, and for sole source procurements, including contract modifications or change orders, unless price resonableness can be established on the basis of a catalog or market price of a commercial product sold in substantial quantities to the general public or based on prices set by law or regulation. A price analysis will be used in all other instances to determine the reasonableness of the proposed contract price.

(2) Grantees and subgrantees will negotiate profit as a separate element of the price for each contract in which there is no price competition and in all cases where cost analysis is performed. To establish a fair and reasonable profit, consideration will be given to the complexity of the work to be performed, the risk borne by the contractor, the contractor's investment, the amount of subcontracting, the quality of its record of past performance, and industry profit rates in the surrounding geographical area for similar work.

(3) Costs or prices based on estimated costs for contracts under grants will be allowable only to the extent that costs incurred or cost estimates included in negotiated prices are consistent with Federal cost principles (see § 1207.22). Grantees may reference their own cost principles that comply with the applicable Federal cost principles.

(4) The cost plus a percentage of cost and percentage of construction cost methods of contracting shall not be used.

(g) *Awarding agency review.* (1) Grantees and subgrantees must make available, upon request of the awarding agency, technical specifications on proposed procurements where the awarding agency believes such review is needed to ensure that the item and/or service specified is the one being proposed for purchase. This review generally will take place prior to the time the specification is incorporated into a solicitation document. However, if the grantee or subgrantee desires to have the review accomplished after a solicitation has been developed, the awarding agency may still review the specifications, with such review usually limited to the technical aspects of the proposed purchase.

(2) Grantees and subgrantees must on request make available for awarding agency pre-award review procurement documents, such as requests for proposals or invitations for bids, independent cost estimates, etc. when:

(i) A grantee's or subgrantee's procurement procedures or operation fails to comply with the procurement standards in this section; or

(ii) The procurement is expected to exceed the simplified acquisition threshold and is to be awarded without competition or only one bid or offer is received in response to a solicitation; or

(iii) The procurement, which is expected to exceed the simplified acquisition threshold, specifies a ''brand name'' product; or

(iv) The proposed award is more than the simplified acquisition threshold and is to be awarded to other than the apparent low bidder under a sealed bid procurement; or

(v) A proposed contract modification changes the scope of a contract or increases the contract amount by more than the simplified acquisition threshold.

(3) A grantee or subgrantee will be exempt from the pre-award review in paragraph (g)(2) of this section if the awarding agency determines that its procurement systems comply with the standards of this section.

(i) A grantee or subgrantee may request that its procurement system be reviewed by the awarding agency to determine whether its system meets these standards in order for its system

to be certified. Generally, these reviews shall occur where there is a continuous high-dollar funding, and third-party contracts are awarded on a regular basis.

(ii) A grantee or subgrantee may self-certify its procurement system. Such self-certification shall not limit the awarding agency's right to survey the system. Under a self-certification procedure, awarding agencies may wish to rely on written assurances from the grantee or subgrantee that it is complying with these standards. A grantee or subgrantee will cite specific procedures, regulations, standards, etc., as being in compliance with these requirements and have its system available for review.

(h) *Bonding requirements.* For construction or facility improvement contracts or subcontracts exceeding the simplified acquisition threshold, the awarding agency may accept the bonding policy and requirements of the grantee or subgrantee provided the awarding agency has made a determination that the awarding agency's interest is adequately protected. If such a determination has not been made, the minimum requirements shall be as follows:

(1) *A bid guarantee from each bidder equivalent to five percent of the bid price.* The ''bid guarantee'' shall consist of a firm commitment such as a bid bond, certified check, or other negotiable instrument accompanying a bid as assurance that the bidder will, upon acceptance of his bid, execute such contractual documents as may be required within the time specified.

(2) *A performance bond on the part of the contractor for 100 percent of the contract price.* A ''performance bond'' is one executed in connection with a contract to secure fulfillment of all the contractor's obligations under such contract.

(3) *A payment bond on the part of the contractor for 100 percent of the contract price.* A ''payment bond'' is one executed in connection with a contract to assure payment as required by law of all persons supplying labor and material in the execution of the work provided for in the contract.

(i) *Contract provisions.* A grantee's and subgrantee's contracts must contain provisions in paragraph (i) of this section. Federal agencies are permitted to require changes, remedies, changed conditions, access and records retention, suspension of work, and other clauses approved by the Office of Federal Procurement Policy.

(1) Administrative, contractual, or legal remedies in instances where contractors violate or breach contract terms, and provide for such sanctions and penalties as may be appropriate. (Contracts more than the simplified acquisition threshold)

(2) Termination for cause and for convenience by the grantee or subgrantee including the manner by which it will be effected and the basis for settlement. (All contracts in excess of $10,000)

(3) Compliance with Executive Order 11246 of September 24, 1965, entitled ''Equal Employment Opportunity,'' as amended by Executive Order 11375 of October 13, 1967, and as supplemented in Department of Labor regulations (41 CFR chapter 60). (All construction contracts awarded in excess of $10,000 by grantees and their contractors or subgrantees)

(4) Compliance with the Copeland ''Anti-Kickback'' Act (18 U.S.C. 874) as supplemented in Department of Labor regulations (29 CFR Part 3). (All contracts and subgrants for construction or repair)

(5) Compliance with the Davis-Bacon Act (40 U.S.C. 276a to 276a–7) as supplemented by Department of Labor regulations (29 CFR Part 5). (Construction contracts in excess of $2000 awarded by grantees and subgrantees when required by Federal grant program legislation)

(6) Compliance with Sections 103 and 107 of the Contract Work Hours and Safety Standards Act (40 U.S.C. 327–330) as supplemented by Department of Labor regulations (29 CFR Part 5). (Construction contracts awarded by grantees and subgrantees in excess of $2000, and in excess of $2500 for other contracts which involve the employment of mechanics or laborers)

(7) Notice of awarding agency requirements and regulations pertaining to reporting.

(8) Notice of awarding agency requirements and regulations pertaining

to patent rights with respect to any discovery or invention which arises or is developed in the course of or under such contract.

(9) Awarding agency requirements and regulations pertaining to copyrights and rights in data.

(10) Access by the grantee, the subgrantee, the Federal grantor agency, the Comptroller General of the United States, or any of their duly authorized representatives to any books, documents, papers, and records of the contractor which are directly pertinent to that specific contract for the purpose of making audit, examination, excerpts, and transcriptions.

(11) Retention of all required records for three years after grantees or subgrantees make final payments and all other pending matters are closed.

(12) Compliance with all applicable standards, orders, or requirements issued under section 306 of the Clean Air Act (42 U.S.C. 1857(h)), section 508 of the Clean Water Act (33 U.S.C. 1368), Executive Order 11738, and Environmental Protection Agency regulations (40 CFR part 15). (Contracts, subcontracts, and subgrants of amounts in excess of $100,000)

(13) Mandatory standards and policies relating to energy efficiency which are contained in the state energy conservation plan issued in compliance with the Energy Policy and Conservation Act (Pub. L. 94–163, 89 Stat. 871).

[53 FR 8072, Mar. 11, 1988, as amended at 60 FR 19639, 19643, Apr. 19, 1995]

§ 1207.37 Subgrants.

(a) *States*. States shall follow state law and procedures when awarding and administering subgrants (whether on a cost reimbursement or fixed amount basis) of financial assistance to local and Indian tribal governments. States shall:

(1) Ensure that every subgrant includes any clauses required by Federal statute and executive orders and their implementing regulations;

(2) Ensure that subgrantees are aware of requirements imposed upon them by Federal statute and regulation;

(3) Ensure that a provision for compliance with § 1207.42 is placed in every cost reimbursement subgrant; and

(4) Conform any advances of grant funds to subgrantees substantially to the same standards of timing and amount that apply to cash advances by Federal agencies.

(b) *All other grantees*. All other grantees shall follow the provisions of this part which are applicable to awarding agencies when awarding and administering subgrants (whether on a cost reimbursement or fixed amount basis) of financial assistance to local and Indian tribal governments. Grantees shall:

(1) Ensure that every subgrant includes a provision for compliance with this part;

(2) Ensure that every subgrant includes any clauses required by Federal statute and executive orders and their implementing regulations; and

(3) Ensure that subgrantees are aware of requirements imposed upon them by Federal statutes and regulations.

(c) *Exceptions*. By their own terms, certain provisions of this part do not apply to the award and administration of subgrants:

(1) Section 1207.10;

(2) Section 1207.11;

(3) The letter-of-credit procedures specified in Treasury Regulations at 31 CFR part 205, cited in § 1207.21; and

(4) Section 1207.50.

REPORTS, RECORDS, RETENTION, AND ENFORCEMENT

§ 1207.40 Monitoring and reporting program performance.

(a) *Monitoring by grantees*. Grantees are responsible for managing the day-to-day operations of grant and subgrant supported activities. Grantees must monitor grant and subgrant supported activities to assure compliance with applicable Federal requirements and that performance goals are being achieved. Grantee monitoring must cover each program, function or activity.

(b) *Nonconstruction performance reports*. The Federal agency may, if it decides that performance information available from subsequent applications contains sufficient information to meet its programmatic needs, require the grantee to submit a performance

report only upon expiration or termination of grant support. Unless waived by the Federal agency this report will be due on the same date as the final Financial Status Report.

(1) Grantees shall submit annual performance reports unless the awarding agency requires quarterly or semi-annual reports. However, performance reports will not be required more frequently than quarterly. Annual reports shall be due 90 days after the grant year, quarterly or semi-annual reports shall be due 30 days after the reporting period. The final performance report will be due 90 days after the expiration or termination of grant support. If a justified request is submitted by a grantee, the Federal agency may extend the due date for any performance report. Additionally, requirements for unnecessary performance reports may be waived by the Federal agency.

(2) Performance reports will contain, for each grant, brief information on the following:

(i) A comparison of actual accomplishments to the objectives established for the period. Where the output of the project can be quantified, a computation of the cost per unit of output may be required if that information will be useful.

(ii) The reasons for slippage if established objectives were not met.

(iii) Additional pertinent information including, when appropriate, analysis and explanation of cost overruns or high unit costs.

(3) Grantees will not be required to submit more than the original and two copies of performance reports.

(4) Grantees will adhere to the standards in this section in prescribing performance reporting requirements for subgrantees.

(c) *Construction performance reports.* For the most part, on-site technical inspections and certified percentage-of-completion data are relied on heavily by Federal agencies to monitor progress under construction grants and subgrants. The Federal agency will require additional formal performance reports only when considered necessary, and never more frequently than quarterly.

(d) *Significant developments.* Events may occur between the scheduled performance reporting dates which have significant impact upon the grant or subgrant supported activity. In such cases, the grantee must inform the Federal agency as soon as the following types of conditions become known:

(1) Problems, delays, or adverse conditions which will materially impair the ability to meet the objective of the award. This disclosure must include a statement of the action taken, or contemplated, and any assistance needed to resolve the situation.

(2) Favorable developments which enable meeting time schedules and objectives sooner or at less cost than anticipated or producing more beneficial results than originally planned.

(e) Federal agencies may make site visits as warranted by program needs.

(f) *Waivers, extensions.* (1) Federal agencies may waive any performance report required by this part if not needed.

(2) The grantee may waive any performance report from a subgrantee when not needed. The grantee may extend the due date for any performance report from a subgrantee if the grantee will still be able to meet its performance reporting obligations to the Federal agency.

§ 1207.41 Financial reporting.

(a) *General.* (1) Except as provided in paragraphs (a)(2) and (5) of this section, grantees will use only the forms specified in paragraphs (a) through (e) of this section, and such supplementary or other forms as may from time to time be authorized by OMB, for:

(i) Submitting financial reports to Federal agencies, or

(ii) Requesting advances or reimbursements when letters of credit are not used.

(2) Grantees need not apply the forms prescribed in this section in dealing with their subgrantees. However, grantees shall not impose more burdensome requirements on subgrantees.

(3) Grantees shall follow all applicable standard and supplemental Federal agency instructions approved by OMB to the extend required under the Paperwork Reduction Act of 1980 for use in connection with forms specified in

paragraphs (b) through (e) of this section. Federal agencies may issue substantive supplementary instructions only with the approval of OMB. Federal agencies may shade out or instruct the grantee to disregard any line item that the Federal agency finds unnecessary for its decisionmaking purposes.

(4) Grantees will not be required to submit more than the original and two copies of forms required under this part.

(5) Federal agencies may provide computer outputs to grantees to expedite or contribute to the accuracy of reporting. Federal agencies may accept the required information from grantees in machine usable format or computer printouts instead of prescribed forms.

(6) Federal agencies may waive any report required by this section if not needed.

(7) Federal agencies may extend the due date of any financial report upon receiving a justified request from a grantee.

(b) *Financial Status Report*—(1) *Form.* Grantees will use Standard Form 269 or 269A, Financial Status Report, to report the status of funds for all nonconstruction grants and for construction grants when required in accordance with § 1207.41(e)(2)(iii).

(2) *Accounting basis.* Each grantee will report program outlays and program income on a cash or accrual basis as prescribed by the awarding agency. If the Federal agency requires accrual information and the grantee's accounting records are not normally kept on the accural basis, the grantee shall not be required to convert its accounting system but shall develop such accrual information through and analysis of the documentation on hand.

(3) *Frequency.* The Federal agency may prescribe the frequency of the report for each project or program. However, the report will not be required more frequently than quarterly. If the Federal agency does not specify the frequency of the report, it will be submitted annually. A final report will be required upon expiration or termination of grant support.

(4) *Due date.* When reports are required on a quarterly or semiannual basis, they will be due 30 days after the reporting period. When required on an annual basis, they will be due 90 days after the grant year. Final reports will be due 90 days after the expiration or termination of grant support.

(c) *Federal Cash Transactions Report*—(1) *Form.* (i) For grants paid by letter or credit, Treasury check advances or electronic transfer of funds, the grantee will submit the Standard Form 272, Federal Cash Transactions Report, and when necessary, its continuation sheet, Standard Form 272a, unless the terms of the award exempt the grantee from this requirement.

(ii) These reports will be used by the Federal agency to monitor cash advanced to grantees and to obtain disbursement or outlay information for each grant from grantees. The format of the report may be adapted as appropriate when reporting is to be accomplished with the assistance of automatic data processing equipment provided that the information to be submitted is not changed in substance.

(2) *Forecasts of Federal cash requirements.* Forecasts of Federal cash requirements may be required in the ''Remarks'' section of the report.

(3) *Cash in hands of subgrantees.* When considered necessary and feasible by the Federal agency, grantees may be required to report the amount of cash advances in excess of three days' needs in the hands of their subgrantees or contractors and to provide short narrative explanations of actions taken by the grantee to reduce the excess balances.

(4) *Frequency and due date.* Grantees must submit the report no later than 15 working days following the end of each quarter. However, where an advance either by letter of credit or electronic transfer of funds is authorized at an annualized rate of one million dollars or more, the Federal agency may require the report to be submitted within 15 working days following the end of each month.

(d) *Request for advance or reimbursement*—(1) *Advance payments.* Requests for Treasury check advance payments will be submitted on Standard Form 270, Request for Advance or Reimbursement. (This form will not be used for drawdowns under a letter of credit, electronic funds transfer or when Treasury check advance payments are

made to the grantee automatically on a predetermined basis.)

(2) *Reimbursements.* Requests for reimbursement under nonconstruction grants will also be submitted on Standard Form 270. (For reimbursement requests under construction grants, see paragraph (e)(1) of this section.)

(3) The frequency for submitting payment requests is treated in § 1207.41(b)(3).

(e) *Outlay report and request for reimbursement for construction programs*—(1) *Grants that support construction activities paid by reimbursement method.* (i) Requests for reimbursement under construction grants will be submitted on Standard Form 271, Outlay Report and Request for Reimbursement for Construction Programs. Federal agencies may, however, prescribe the Request for Advance or Reimbursement form, specified in § 1207.41(d), instead of this form.

(ii) The frequency for submitting reimbursement requests is treated in § 1207.41(b)(3).

(2) *Grants that support construction activities paid by letter of credit, electronic funds transfer or Treasury check advance.* (i) When a construction grant is paid by letter of credit, electronic funds transfer or Treasury check advances, the grantee will report its outlays to the Federal agency using Standard Form 271, Outlay Report and Request for Reimbursement for Construction Programs. The Federal agency will provide any necessary special instruction. However, frequency and due date shall be governed by § 1207.41(b)(3) and (4).

(ii) When a construction grant is paid by Treasury check advances based on periodic requests from the grantee, the advances will be requested on the form specified in § 1207.41(d).

(iii) The Federal agency may substitute the Financial Status Report specified in § 1207.41(b) for the Outlay Report and Request for Reimbursement for Construction Programs.

(3) *Accounting basis.* The accounting basis for the Outlay Report and Request for Reimbursement for Construction Programs shall be governed by § 1207.41(b)(2).

§ 1207.42 Retention and access requirements for records.

(a) *Applicability.* (1) This section applies to all financial and programmatic records, supporting documents, statistical records, and other records of grantees or subgrantees which are:

(i) Required to be maintained by the terms of this part, program regulations or the grant agreement, or

(ii) Otherwise reasonably considered as pertinent to program regulations or the grant agreement.

(2) This section does not apply to records maintained by contractors or subcontractors. For a requirement to place a provision concerning records in certain kinds of contracts, see § 1207.36(i)(10).

(b) *Length of retention period.* (1) Except as otherwise provided, records must be retained for three years from the starting date specified in paragraph (c) of this section.

(2) If any litigation, claim, negotiation, audit or other action involving the records has been started before the expiration of the 3-year period, the records must be retained until completion of the action and resolution of all issues which arise from it, or until the end of the regular 3-year period, whichever is later.

(3) To avoid duplicate recordkeeping, awarding agencies may make special arrangements with grantees and subgrantees to retain any records which are continuously needed for joint use. The awarding agency will request transfer of records to its custody when it determines that the records possess long-term retention value. When the records are transferred to or maintained by the Federal agency, the 3-year retention requirement is not applicable to the grantee or subgrantee.

(c) *Starting date of retention period*—(1) *General.* When grant support is continued or renewed at annual or other intervals, the retention period for the records of each funding period starts on the day the grantee or subgrantee submits to the awarding agency its single or last expenditure report for that period. However, if grant support is continued or renewed quarterly, the retention period for each year's records starts on the day the grantee submits

its expenditure report for the last quarter of the Federal fiscal year. In all other cases, the retention period starts on the day the grantee submits its final expenditure report. If an expenditure report has been waived, the retention period starts on the day the report would have been due.

(2) *Real property and equipment records.* The retention period for real property and equipment records starts from the date of the disposition or replacement or transfer at the direction of the awarding agency.

(3) *Records for income transactions after grant or subgrant support.* In some cases grantees must report income after the period of grant support. Where there is such a requirement, the retention period for the records pertaining to the earning of the income starts from the end of the grantee's fiscal year in which the income is earned.

(4) *Indirect cost rate proposals, cost allocations plans, etc.* This paragraph applies to the following types of documents, and their supporting records: indirect cost rate computations or proposals, cost allocation plans, and any similar accounting computations of the rate at which a particular group of costs is chargeable (such as computer usage chargeback rates or composite fringe benefit rates).

(i) *If submitted for negotiation.* If the proposal, plan, or other computation is required to be submitted to the Federal Government (or to the grantee) to form the basis for negotiation of the rate, then the 3-year retention period for its supporting records starts from the date of such submission.

(ii) *If not submitted for negotiation.* If the proposal, plan, or other computation is not required to be submitted to the Federal Government (or to the grantee) for negotiation purposes, then the 3-year retention period for the proposal plan, or computation and its supporting records starts from end of the fiscal year (or other accounting period) covered by the proposal, plan, or other computation.

(d) *Substitution of microfilm.* Copies made by microfilming, photocopying, or similar methods may be substituted for the original records.

(e) *Access to records*—(1) *Records of grantees and subgrantees.* The awarding agency and the Comptroller General of the United States, or any of their authorized representatives, shall have the right of access to any pertinent books, documents, papers, or other records of grantees and subgrantees which are pertinent to the grant, in order to make audits, examinations, excerpts, and transcripts.

(2) *Expiration of right of access.* The rights of access in this section must not be limited to the required retention period but shall last as long as the records are retained.

(f) *Restrictions on public access.* The Federal Freedom of Information Act (5 U.S.C. 552) does not apply to records Unless required by Federal, State, or local law, grantees and subgrantees are not required to permit public access to their records.

§ 1207.43 Enforcement.

(a) *Remedies for noncompliance.* If a grantee or subgrantee materially fails to comply with any term of an award, whether stated in a Federal statute or regulation, an assurance, in a State plan or application, a notice of award, or elsewhere, the awarding agency may take one or more of the following actions, as appropriate in the circumstances:

(1) Temporarily withhold cash payments pending correction of the deficiency by the grantee or subgrantee or more severe enforcement action by the awarding agency,

(2) Disallow (that is, deny both use of funds and matching credit for) all or part of the cost of the activity or action not in compliance,

(3) Wholly or partly suspend or terminate the current award for the grantee's or subgrantee's program,

(4) Withhold further awards for the program, or

(5) Take other remedies that may be legally available.

(b) *Hearings, appeals.* In taking an enforcement action, the awarding agency will provide the grantee or subgrantee an opportunity for such hearing, appeal, or other administrative proceeding to which the grantee or subgrantee is entitled under any statute or regulation applicable to the action involved.

(c) *Effects of suspension and termination*. Costs of grantee or subgrantee resulting from obligations incurred by the grantee or subgrantee during a suspension or after termination of an award are not allowable unless the awarding agency expressly authorizes them in the notice of suspension or termination or subsequently. Other grantee or subgrantee costs during suspension or after termination which are necessary and not reasonably avoidable are allowable if:

(1) The costs result from obligations which were properly incurred by the grantee or subgrantee before the effective date of suspension or termination, are not in anticipation of it, and, in the case of a termination, are noncancellable, and,

(2) The costs would be allowable if the award were not suspended or expired normally at the end of the funding period in which the termination takes effect.

(d) *Relationship to debarment and suspension*. The enforcement remedies identified in this section, including suspension and termination, do not preclude grantee or subgrantee from being subject to ''Debarment and Suspension'' under E.O. 12549 (see § 1207.35).

§ 1207.44 Termination for convenience.

Except as provided in § 1207.43 awards may be terminated in whole or in part only as follows:

(a) By the awarding agency with the consent of the grantee or subgrantee in which case the two parties shall agree upon the termination conditions, including the effective date and in the case of partial termination, the portion to be terminated, or

(b) By the grantee or subgrantee upon written notification to the awarding agency, setting forth the reasons for such termination, the effective date, and in the case of partial termination, the portion to be terminated. However, if, in the case of a partial termination, the awarding agency determines that the remaining portion of the award will not accomplish the purposes for which the award was made, the awarding agency may terminate the award in its entirety under either § 1207.43 or paragraph (a) of this section.

Subpart D—After-The-Grant Requirements

§ 1207.50 Closeout.

(a) *General*. The Federal agency will close out the award when it determines that all applicable administrative actions and all required work of the grant has been completed.

(b) *Reports*. Within 90 days after the expiration or termination of the grant, the grantee must submit all financial, performance, and other reports required as a condition of the grant. Upon request by the grantee, Federal agencies may extend this timeframe. These may include but are not limited to:

(1) Final performance or progress report.

(2) Financial Status Report (SF 269) or Outlay Report and Request for Reimbursement for Construction Programs (SF–271) (as applicable).

(3) Final request for payment (SF–270) (if applicable).

(4) Invention disclosure (if applicable).

(5) Federally-owned property report:

In accordance with § 1207.32(f), a grantee must submit an inventory of all federally owned property (as distinct from property acquired with grant funds) for which it is accountable and request disposition instructions from the Federal agency of property no longer needed.

(c) *Cost adjustment*. The Federal agency will, within 90 days after receipt of reports in paragraph (b) of this section, make upward or downward adjustments to the allowable costs.

(d) *Cash adjustments*. (1) The Federal agency will make prompt payment to the grantee for allowable reimbursable costs.

(2) The grantee must immediately refund to the Federal agency any balance of unobligated (unencumbered) cash advanced that is not authorized to be retained for use on other grants.

§ 1207.51 Later disallowances and adjustments.

The closeout of a grant does not affect:

(a) The Federal agency's right to disallow costs and recover funds on the basis of a later audit or other review;

(b) The grantee's obligation to return any funds due as a result of later refunds, corrections, or other transactions;

(c) Records retention as required in § 1207.42;

(d) Property management requirements in §§ 1207.31 and 1207.32; and

(e) Audit requirements in § 1207.26.

§ 1207.52 Collection of amounts due.

(a) Any funds paid to a grantee in excess of the amount to which the grantee is finally determined to be entitled under the terms of the award constitute a debt to the Federal Government. If not paid within a reasonable period after demand, the Federal agency may reduce the debt by:

(1) Making an adminstrative offset against other requests for reimbursements,

(2) Withholding advance payments otherwise due to the grantee, or

(3) Other action permitted by law.

(b) Except where otherwise provided by statutes or regulations, the Federal agency will charge interest on an overdue debt in accordance with the Federal Claims Collection Standards (4 CFR chapter II). The date from which interest is computed is not extended by litigation or the filing of any form of appeal.

Subpart E—Entitlement [Reserved]

PART 1208—ENFORCEMENT OF NONDISCRIMINATION ON THE BASIS OF HANDICAP IN PROGRAMS OR ACTIVITIES CONDUCTED BY THE NATIONAL ARCHIVES AND RECORDS ADMINISTRATION

Sec.

1208.101 Purpose.
1208.102 Application.
1208.103 Definitions.
1208.104–1208.109 [Reserved]
1208.110 Self-evaluation.
1208.111 Notice.
1208.112–1208.129 [Reserved]
1208.130 General prohibitions against discrimination.
1208.131–1208.139 [Reserved]
1208.140 Employment.
1208.141–1208.148 [Reserved]
1208.149 Program accessibility: Discrimination prohibited.
1208.150 Program accessibility: Existing facilities.
1208.151 Program accessibility: New construction and alterations.
1208.152–1208.159 [Reserved]
1208.160 Communications.
1208.161–1208.169 [Reserved]
1208.170 Compliance procedures.
1208.171–1208.999 [Reserved]

AUTHORITY: 29 U.S.C. 794.

SOURCE: 53 FR 25884, 25885, July 8, 1988, unless otherwise noted.

§ 1208.101 Purpose.

The purpose of this regulation is to effectuate section 119 of the Rehabilitation, Comprehensive Services, and Developmental Disabilities Amendments of 1978, which amended section 504 of the Rehabilitation Act of 1973 to prohibit discrimination on the basis of handicap in programs or activities conducted by Executive agencies or the United States Postal Service.

§ 1208.102 Application.

This regulation (§§ 1208.101–1208.170) applies to all programs or activities conducted by the agency, except for programs or activities conducted outside the United States that do not involve individuals with handicaps in the United States.

§ 1208.103 Definitions.

For purposes of this regulation, the term—

Assistant Attorney General means the Assistant Attorney General, Civil Rights Division, United States Department of Justice.

Auxiliary aids means services or devices that enable persons with impaired sensory, manual, or speaking skills to have an equal opportunity to participate in, and enjoy the benefits of, programs or activities conducted by the agency. For example, auxiliary aids useful for persons with impaired vision include readers, Brailled materials, audio recordings, and other similar services and devices. Auxiliary aids useful for persons with impaired hearing include telephone handset amplifiers, telephones compatible with hearing aids, telecommunication devices for deaf persons (TDD's), interpreters, notetakers, written materials, and other similar services and devices.

Complete complaint means a written statement that contains the complainant's name and address and describes the agency's alleged discriminatory action in sufficient detail to inform the agency of the nature and date of the alleged violation of section 504. It shall be signed by the complainant or by someone authorized to do so on his or her behalf. Complaints filed on behalf of classes or third parties shall describe or identify (by name, if possible) the alleged victims of discrimination.

Facility means all or any portion of buildings, structures, equipment, roads, walks, parking lots, rolling stock or other conveyances, or other real or personal property.

Historic preservation programs means programs conducted by the agency that have preservation of historic properties as a primary purpose.

Historic properties means those properties that are listed or eligible for listing in the National Register of Historic Places or properties designated as historic under a statute of the appropriate State or local government body.

Individual with handicaps means any person who has a physical or mental impairment that substantially limits one or more major life activities, has a record of such an impairment, or is regarded as having such an impairment.

As used in this definition, the phrase:

(1) *Physical or mental impairment* includes—

(i) Any physiological disorder or condition, cosmetic disfigurement, or anatomical loss affecting one or more of the following body systems: Neurological; musculoskeletal; special sense organs; respiratory, including speech organs; cardiovascular; reproductive; digestive; genitourinary; hemic and lymphatic; skin; and endocrine; or

(ii) Any mental or psychological disorder, such as mental retardation, organic brain syndrome, emotional or mental illness, and specific learning disabilities. The term *physical or mental impairment* includes, but is not limited to, such diseases and conditions as orthopedic, visual, speech, and hearing impairments, cerebral palsy, epilepsy, muscular dystrophy, multiple sclerosis, cancer, heart disease, diabetes, mental retardation, emotional illness, and drug addiction and alcoholism.

(2) *Major life activities* includes functions such as caring for one's self, performing manual tasks, walking, seeing, hearing, speaking, breathing, learning, and working.

(3) *Has a record of such an impairment* means has a history of, or has been misclassified as having, a mental or physical impairment that substantially limits one or more major life activities.

(4) *Is regarded as having an impairment* means—

(i) Has a physical or mental impairment that does not substantially limit major life activities but is treated by the agency as constituting such a limitation;

(ii) Has a physical or mental impairment that substantially limits major life activities only as a result of the attitudes of others toward such impairment; or

(iii) Has none of the impairments defined in paragraph (i) of this definition but is treated by the agency as having such an impairment.

Qualified individual with handicaps means—

(1) With respect to preschool, elementary, or secondary education services provided by the agency, an individual with handicaps who is a member of a class of persons otherwise entitled by statute, regulation, or agency policy to receive education services from the agency;

(2) With respect to any other agency program or activity under which a person is required to perform services or to achieve a level of accomplishment, an individual with handicaps who meets the essential eligibility requirements and who can achieve the purpose of the program or activity without modifications in the program or activity that the agency can demonstrate would result in a fundamental alteration in its nature;

(3) With respect to any other program or activity, an individual with handicaps who meets the essential eligibility requirements for participation in, or receipt of benefits from, that program or activity; and

(4) *Qualified handicapped person* as that term is defined for purposes of employment in 29 CFR 1613.702(f), which is

made applicable to this regulation by § 1208.140.

Section 504 means section 504 of the Rehabilitation Act of 1973 (Pub. L. 93–112, 87 Stat. 394 (29 U.S.C. 794)), as amended by the Rehabilitation Act Amendments of 1974 (Pub. L. 93–516, 88 Stat. 1617); the Rehabilitation, Comprehensive Services, and Developmental Disabilities Amendments of 1978 (Pub. L. 95–602, 92 Stat. 2955); and the Rehabilitation Act Amendments of 1986 (Pub. L. 99–506, 100 Stat. 1810). As used in this regulation, section 504 applies only to programs or activities conducted by Executive agencies and not to federally assisted programs.

Substantial impairment means a significant loss of the integrity of finished materials, design quality, or special character resulting from a permanent alteration.

§§ 1208.104–1208.109 [Reserved]

§ 1208.110 Self-evaluation.

(a) The agency shall, by September 6, 1989, evaluate its current policies and practices, and the effects thereof, that do not or may not meet the requirements of this regulation and, to the extent modification of any such policies and practices is required, the agency shall proceed to make the necessary modifications.

(b) The agency shall provide an opportunity to interested persons, including individuals with handicaps or organizations representing individuals with handicaps, to participate in the self-evaluation process by submitting comments (both oral and written).

(c) The agency shall, for at least three years following completion of the self-evaluation, maintain on file and make available for public inspection:

(1) A description of areas examined and any problems identified; and

(2) A description of any modifications made.

§ 1208.111 Notice.

The agency shall make available to employees, applicants, participants, beneficiaries, and other interested persons such information regarding the provisions of this regulation and its applicability to the programs or activities conducted by the agency, and make such information available to them in such manner as the head of the agency finds necessary to apprise such persons of the protections against discrimination assured them by section 504 and this regulation.

§§ 1208.112–1208.129 [Reserved]

§ 1208.130 General prohibitions against discrimination.

(a) No qualified individual with handicaps shall, on the basis of handicap, be excluded from participation in, be denied the benefits of, or otherwise be subjected to discrimination under any program or activity conducted by the agency.

(b)(1) The agency, in providing any aid, benefit, or service, may not, directly or through contractual, licensing, or other arrangements, on the basis of handicap—

(i) Deny a qualified individual with handicaps the opportunity to participate in or benefit from the aid, benefit, or service;

(ii) Afford a qualified individual with handicaps an opportunity to participate in or benefit from the aid, benefit, or service that is not equal to that afforded others;

(iii) Provide a qualified individual with handicaps with an aid, benefit, or service that is not as effective in affording equal opportunity to obtain the same result, to gain the same benefit, or to reach the same level of achievement as that provided to others;

(iv) Provide different or separate aid, benefits, or services to individuals with handicaps or to any class of individuals with handicaps than is provided to others unless such action is necessary to provide qualified individuals with handicaps with aid, benefits, or services that are as effective as those provided to others;

(v) Deny a qualified individual with handicaps the opportunity to participate as a member of planning or advisory boards;

(vi) Otherwise limit a qualified individual with handicaps in the enjoyment of any right, privilege, advantage, or opportunity enjoyed by others receiving the aid, benefit, or service.

(2) The agency may not deny a qualified individual with handicaps the opportunity to participate in programs or activities that are not separate or different, despite the existence of permissibly separate or different programs or activities.

(3) The agency may not, directly or through contractual or other arrangements, utilize criteria or methods of administration the purpose or effect of which would—

(i) Subject qualified individuals with handicaps to discrimination on the basis of handicap; or

(ii) Defeat or substantially impair accomplishment of the objectives of a program or activity with respect to individuals with handicaps.

(4) The agency may not, in determining the site or location of a facility, make selections the purpose or effect of which would—

(i) Exclude individuals with handicaps from, deny them the benefits of, or otherwise subject them to discrimination under any program or activity conducted by the agency; or

(ii) Defeat or substantially impair the accomplishment of the objectives of a program or activity with respect to individuals with handicaps.

(5) The agency, in the selection of procurement contractors, may not use criteria that subject qualified individuals with handicaps to discrimination on the basis of handicap.

(6) The agency may not administer a licensing or certification program in a manner that subjects qualified individuals with handicaps to discrimination on the basis of handicap, nor may the agency establish requirements for the programs or activities of licensees or certified entities that subject qualified individuals with handicaps to discrimination on the basis of handicap. However, the programs or activities of entities that are licensed or certified by the agency are not, themselves, covered by this regulation.

(c) The exclusion of nonhandicapped persons from the benefits of a program limited by Federal statute or Executive order to individuals with handicaps or the exclusion of a specific class of individuals with handicaps from a program limited by Federal statute or Executive order to a different class of individuals with handicaps is not prohibited by this regulation.

(d) The agency shall administer programs and activities in the most integrated setting appropriate to the needs of qualified individuals with handicaps.

§§ 1208.131–1208.139 [Reserved]

§ 1208.140 Employment.

No qualified individual with handicaps shall, on the basis of handicap, be subject to discrimination in employment under any program or activity conducted by the agency. The definitions, requirements, and procedures of section 501 of the Rehabilitation Act of 1973 (29 U.S.C. 791), as established by the Equal Employment Opportunity Commission in 29 CFR part 1613, shall apply to employment in federally conducted programs or activities.

§ 1208.141–1208.148 [Reserved]

§ 1208.149 Program accessibility: Discrimination prohibited.

Except as otherwise provided in § 1208.150, no qualified individual with handicaps shall, because the agency's facilities are inaccessible to or unusable by individuals with handicaps, be denied the benefits of, be excluded from participation in, or otherwise be subjected to discrimination under any program or activity conducted by the agency.

§ 1208.150 Program accessibility: Existing facilities.

(a) *General.* The agency shall operate each program or activity so that the program or activity, when viewed in its entirety, is readily accessible to and usable by individuals with handicaps. This paragraph does not—

(1) Necessarily require the agency to make each of its existing facilities accessible to and usable by individuals with handicaps;

(2) In the case of historic preservation programs, require the agency to take any action that would result in a substantial impairment of significant historic features of an historic property; or

(3) Require the agency to take any action that it can demonstrate would result in a fundamental alteration in the nature of a program or activity or

in undue financial and administrative burdens. In those circumstances where agency personnel believe that the proposed action would fundamentally alter the program or activity or would result in undue financial and administrative burdens, the agency has the burden of proving that compliance with §1208.150(a) would result in such alteration or burdens. The decision that compliance would result in such alteration or burdens must be made by the agency head or his or her designee after considering all agency resources available for use in the funding and operation of the conducted program or activity, and must be accompanied by a written statement of the reasons for reaching that conclusion. If an action would result in such an alteration or such burdens, the agency shall take any other action that would not result in such an alteration or such burdens but would nevertheless ensure that individuals with handicaps receive the benefits and services of the program or activity.

(b) *Methods*—(1) *General*. The agency may comply with the requirements of this section through such means as redesign of equipment, reassignment of services to accessible buildings, assignment of aides to beneficiaries, home visits, delivery of services at alternate accessible sites, alteration of existing facilities and construction of new facilities, use of accessible rolling stock, or any other methods that result in making its programs or activities readily accessible to and usable by individuals with handicaps. The agency is not required to make structural changes in existing facilities where other methods are effective in achieving compliance with this section. The agency, in making alterations to existing buildings, shall meet accessibility requirements to the extent compelled by the Architectural Barriers Act of 1968, as amended (42 U.S.C. 4151–4157), and any regulations implementing it. In choosing among available methods for meeting the requirements of this section, the agency shall give priority to those methods that offer programs and activities to qualified individuals with handicaps in the most integrated setting appropriate.

(2) *Historic preservation programs*. In meeting the requirements of §1208.150(a) in historic preservation programs, the agency shall give priority to methods that provide physical access to individuals with handicaps. In cases where a physical alteration to an historic property is not required because of §1208.150(a)(2) or (3), alternative methods of achieving program accessibility include—

(i) Using audio-visual materials and devices to depict those portions of an historic property that cannot otherwise be made accessible;

(ii) Assigning persons to guide individuals with handicaps into or through portions of historic properties that cannot otherwise be made accessible; or

(iii) Adopting other innovative methods.

(c) *Time period for compliance*. The agency shall comply with the obligations established under this section by November 7, 1988, except that where structural changes in facilities are undertaken, such changes shall be made by September 6, 1991, but in any event as expeditiously as possible.

(d) *Transition plan*. In the event that structural changes to facilities will be undertaken to achieve program accessibility, the agency shall develop, by March 6, 1989, a transition plan setting forth the steps necessary to complete such changes. The agency shall provide an opportunity to interested persons, including individuals with handicaps or organizations representing individuals with handicaps, to participate in the development of the transition plan by submitting comments (both oral and written). A copy of the transition plan shall be made available for public inspection. The plan shall, at a minimum—

(1) Identify physical obstacles in the agency's facilities that limit the accessibility of its programs or activities to individuals with handicaps;

(2) Describe in detail the methods that will be used to make the facilities accessible;

(3) Specify the schedule for taking the steps necessary to achieve compliance with this section and, if the time period of the transition plan is longer than one year, identify steps that will

be taken during each year of the transition period; and

(4) Indicate the official responsible for implementation of the plan.

§ 1208.151 Program accessibility: New construction and alterations.

Each building or part of a building that is constructed or altered by, on behalf of, or for the use of the agency shall be designed, constructed, or altered so as to be readily accessible to and usable by individuals with handicaps. The definitions, requirements, and standards of the Architectural Barriers Act (42 U.S.C. 4151–4157), as established in 41 CFR 101–19.600 to 101–19.607, apply to buildings covered by this section.

§§ 1208.152–1208.159 [Reserved]

§ 1208.160 Communications.

(a) The agency shall take appropriate steps to ensure effective communication with applicants, participants, personnel of other Federal entities, and members of the public.

(1) The agency shall furnish appropriate auxiliary aids where necessary to afford an individual with handicaps an equal opportunity to participate in, and enjoy the benefits of, a program or activity conducted by the agency.

(i) In determining what type of auxiliary aid is necessary, the agency shall give primary consideration to the requests of the individual with handicaps.

(ii) The agency need not provide individually prescribed devices, readers for personal use or study, or other devices of a personal nature.

(2) Where the agency communicates with applicants and beneficiaries by telephone, telecommunication devices for deaf persons (TDD's) or equally effective telecommunication systems shall be used to communicate with persons with impaired hearing.

(b) The agency shall ensure that interested persons, including persons with impaired vision or hearing, can obtain information as to the existence and location of accessible services, activities, and facilities.

(c) The agency shall provide signage at a primary entrance to each of its inaccessible facilities, directing users to a location at which they can obtain information about accessible facilities. The international symbol for accessibility shall be used at each primary entrance of an accessible facility.

(d) This section does not require the agency to take any action that it can demonstrate would result in a fundamental alteration in the nature of a program or activity or in undue financial and administrative burdens. In those circumstances where agency personnel believe that the proposed action would fundamentally alter the program or activity or would result in undue financial and administrative burdens, the agency has the burden of proving that compliance with § 1208.160 would result in such alteration or burdens. The decision that compliance would result in such alteration or burdens must be made by the agency head or his or her designee after considering all agency resources available for use in the funding and operation of the conducted program or activity and must be accompanied by a written statement of the reasons for reaching that conclusion. If an action required to comply with this section would result in such an alteration or such burdens, the agency shall take any other action that would not result in such an alteration or such burdens but would nevertheless ensure that, to the maximum extent possible, individuals with handicaps receive the benefits and services of the program or activity.

§§ 1208.161–1208.169 [Reserved]

§ 1208.170 Compliance procedures.

(a) Except as provided in paragraph (b) of this section, this section applies to all allegations of discrimination on the basis of handicap in programs and activities conducted by the agency.

(b) The agency shall process complaints alleging violations of section 504 with respect to employment according to the procedures established by the Equal Employment Opportunity Commission in 29 CFR part 1613 pursuant to section 501 of the Rehabilitation Act of 1973 (29 U.S.C. 791).

(c) The Assistant Archivist for Management and Administration shall be responsible for coordinating implementation of this section. Compliants may

be sent to National Archives and Records Administration (NA), Washington, DC 20408.

(d) The agency shall accept and investigate all complete complaints for which it has jurisdiction. All complete complaints must be filed within 180 days of the alleged act of discrimination. The agency may extend this time period for good cause.

(e) If the agency receives a complaint over which it does not have jurisdiction, it shall promptly notify the complainant and shall make reasonable efforts to refer the complaint to the appropriate Government entity.

(f) The agency shall notify the Architectural and Transportation Barriers Compliance Board upon receipt of any complaint alleging that a building or facility that is subject to the Architectural Barriers Act of 1968, as amended (42 U.S.C. 4151–4157), is not readily accessible to and usable by individuals with handicaps.

(g) Within 180 days of the receipt of a complete complaint for which it has jurisdiction, the agency shall notify the complainant of the results of the investigation in a letter containing—

(1) Findings of fact and conclusions of law;

(2) A description of a remedy for each violation found; and

(3) A notice of the right to appeal.

(h) Appeals of the findings of fact and conclusions of law or remedies must be filed by the complainant within 90 days of receipt from the agency of the letter required by §1208.170(g). The agency may extend this time for good cause.

(i) Timely appeals shall be accepted and processed by the head of the agency.

(j) The head of the agency shall notify the complainant of the results of the appeal within 60 days of the receipt of the request. If the head of the agency determines that additional information is needed from the complainant, he or she shall have 60 days from the date of receipt of the additional information to make his or her determination on the appeal.

(k) The time limits cited in paragraphs (g) and (j) of this section may be extended with the permission of the Assistant Attorney General.

(l) The agency may delegate its authority for conducting complaint investigations to other Federal agencies, except that the authority for making the final determination may not be delegated to another agency.

[53 FR 25884, 25885, July 8, 1988, as amended at 53 FR 25884, July 8, 1988]

§§ 1208.171–1208.999 [Reserved]

PART 1209—GOVERNMENTWIDE DEBARMENT AND SUSPENSION (NONPROCUREMENT) AND GOVERNMENTWIDE REQUIREMENTS FOR DRUG-FREE WORKPLACE (GRANTS)

Subpart A—General

Sec.
1209.100 Purpose.
1209.105 Definitions.
1209.110 Coverage.
1209.115 Policy.

Subpart B—Effect of Action

1209.200 Debarment or suspension.
1209.205 Ineligible persons.
1209.210 Voluntary exclusion.
1209.215 Exception provision.
1209.220 Continuation of covered transactions.
1209.225 Failure to adhere to restrictions.

Subpart C—Debarment

1209.300 General.
1209.305 Causes for debarment.
1209.310 Procedures.
1209.311 Investigation and referral.
1209.312 Notice of proposed debarment.
1209.313 Opportunity to contest proposed debarment.
1209.314 Debarring official's decision.
1209.315 Settlement and voluntary exclusion.
1209.320 Period of debarment.
1209.325 Scope of debarment.

Subpart D—Suspension

1209.400 General.
1209.405 Causes for suspension.
1209.410 Procedures.
1209.411 Notice of suspension.
1209.412 Opportunity to contest suspension.
1209.413 Suspending official's decision.
1209.415 Period of suspension.
1209.420 Scope of suspension.

Subpart E—Responsibilities of GSA, Agency and Participants

1209.500 GSA responsibilities.
1209.505 NARA responsibilities.
1209.510 Participant's responsibilities.

Subpart F—Drug-Free Workplace Requirements (Grants)

1209.600 Purpose.
1209.605 Definitions.
1209.610 Coverage.
1209.615 Grounds for suspension of payments, suspension or termination of grants, or suspension or debarment.
1209.620 Effect of violation.
1209.625 Exception provision.
1209.630 Certification requirements and procedures.
1209.635 Reporting of and employee sanctions for convictions of criminal drug offenses.

APPENDIX A TO PART 1209—CERTIFICATION REGARDING DEBARMENT, SUSPENSION, AND OTHER RESPONSIBILITY MATTERS—PRIMARY COVERED TRANSACTIONS
APPENDIX B TO PART 1209—CERTIFICATION REGARDING DEBARMENT, SUSPENSION, INELIGIBILITY AND VOLUNTARY EXCLUSION—LOWER TIER COVERED TRANSACTIONS
APPENDIX C TO PART 1209—CERTIFICATION REGARDING DRUG-FREE WORKPLACE REQUIREMENTS

AUTHORITY: E.O. 12549; sec. 5151–5160 of the Drug-Free Workplace Act of 1988 (Pub. L. 100–690, title V, subtitle D; 41 U.S.C. 701 *et seq.*); 44 U.S.C. 2104(a).

SOURCE: 53 FR 19193, 19194, 19204, May 26, 1988, unless otherwise noted.

CROSS REFERENCE: See also Office of Management and Budget notice published at 55 FR 21679, May 25, 1990, and 60 FR 33036, June 26, 1995.

Subpart A—General

§ 1209.100 Purpose.

(a) Executive Order (E.O.) 12549 provides that, to the extent permitted by law, Executive departments and agencies shall participate in a governmentwide system for nonprocurement debarment and suspension. A person who is debarred or suspended shall be excluded from Federal financial and nonfinancial assistance and benefits under Federal programs and activities. Debarment or suspension of a participant in a program by one agency shall have governmentwide effect.

(b) These regulations implement section 3 of E.O. 12549 and the guidelines promulgated by the Office of Management and Budget under section 6 of the E.O. by:

(1) Prescribing the programs and activities that are covered by the governmentwide system;

(2) Prescribing the governmentwide criteria and governmentwide minimum due process procedures that each agency shall use;

(3) Providing for the listing of debarred and suspended participants, participants declared ineligible (see definition of ''ineligible'' in § 1209.105), and participants who have voluntarily excluded themselves from participation in covered transactions;

(4) Setting forth the consequences of a debarment, suspension, determination of ineligibility, or voluntary exclusion; and

(5) Offering such other guidance as necessary for the effective implementation and administration of the governmentwide system.

(c) These regulations also implement Executive Order 12689 (3 CFR, 1989 Comp., p. 235) and 31 U.S.C. 6101 note (Public Law 103–355, sec. 2455, 108 Stat. 3327) by—

(1) Providing for the inclusion in the *List of Parties Excluded from Federal Procurement and Nonprocurement Programs* all persons proposed for debarment, debarred or suspended under the Federal Acquisition Regulation, 48 CFR Part 9, subpart 9.4; persons against which governmentwide exclusions have been entered under this part; and persons determined to be ineligible; and

(2) Setting forth the consequences of a debarment, suspension, determination of ineligibility, or voluntary exclusion.

(d) Although these regulations cover the listing of ineligible participants and the effect of such listing, they do not prescribe policies and procedures governing declarations of ineligibility.

[60 FR 33040, 33058, June 26, 1995]

§ 1209.105 Definitions.

The following definitions apply to this part:

Adequate evidence. Information sufficient to support the reasonable belief

that a particular act or omission has occurred.

Affiliate. Persons are affiliates of each other if, directly or indirectly, either one controls or has the power to control the other, *or*, a third person controls or has the power to control both. Indicia of control include, but are not limited to: interlocking management or ownership, identity of interests among family members, shared facilities and equipment, common use of employees, or a business entity organized following the suspension or debarment of a person which has the same or similar management, ownership, or principal employees as the suspended, debarred, ineligible, or voluntarily excluded person.

Agency. Any executive department, military department or defense agency or other agency of the executive branch, excluding the independent regulatory agencies.

Civil judgment. The disposition of a civil action by any court of competent jurisdiction, whether entered by verdict, decision, settlement, stipulation, or otherwise creating a civil liability for the wrongful acts complained of; or a final determination of liability under the Program Fraud Civil Remedies Act of 1988 (31 U.S.C. 3801–3812).

Conviction. A judgment or conviction of a criminal offense by any court of competent jurisdiction, whether entered upon a verdict or a plea, including a plea of nolo contendere.

Debarment. An action taken by a debarring official in accordance with these regulations to exclude a person from participating in covered transactions. A person so excluded is ''debarred.''

Debarring official. An official authorized to impose debarment. The debarring official is either:

(1) The agency head, or

(2) An official designated by the agency head.

Indictment. Indictment for a criminal offense. An information or other filing by competent authority charging a criminal offense shall be given the same effect as an indictment.

Ineligible. Excluded from participation in Federal nonprocurement programs pursuant to a determination of ineligibility under statutory, executive order, or regulatory authority, other than Executive Order 12549 and its agency implementing regulations; for exemple, excluded pursuant to the Davis-Bacon Act and its implementing regulations, the equal employment opportunity acts and executive orders, or the environmental protection acts and executive orders. A person is ineligible where the determination of ineligibility affects such person's eligibility to participate in more than one covered transaction.

Legal proceedings. Any criminal proceeding or any civil judicial proceeding to which the Federal Government or a State or local government or quasi-governmental authority is a party. The term includes appeals from such proceedings.

List of Parties Excluded from Federal Procurement and Nonprocurement Programs. A list compiled, maintained and distributed by the General Services Administration (GSA) containing the names and other information about persons who have been debarred, suspended, or voluntarily excluded under Executive Orders 12549 and 12689 and these regulations or 48 CFR part 9, subpart 9.4, persons who have been proposed for debarment under 48 CFR part 9, subpart 9.4, and those persons who have been determined to be ineligible.

Notice. A written communication served in person or sent by certified mail, return receipt requested, or its equivalent, to the last known address of a party, its identified counsel, its agent for service of process, or any partner, officer, director, owner, or joint venturer of the party. Notice, if undeliverable, shall be considered to have been received by the addressee five days after being properly sent to the last address known by the agency.

Participant. Any person who submits a proposal for, enters into, or reasonably may be expected to enter into a covered transaction. This term also includes any person who acts on behalf of or is authorized to commit a participant in a covered transaction as an agent or representative of another participant.

Person. Any individual, corporation, partnership, association, unit of government or legal entity, however organized, except: foreign governments or

foreign governmental entities, public international organizations, foreign government owned (in whole or in part) or controlled entities, and entities consisting wholly or partially of foreign governments or foreign governmental entities.

Preponderance of the evidence. Proof by information that, compared with that opposing it, leads to the conclusion that the fact at issue is more probably true than not.

Principal. Officer, director, owner, partner, key employee, or other person within a participant with primary management or supervisory responsibilities; or a person who has a critical influence on or substantive control over a covered transaction, whether or not employed by the participant. Persons who have a critical influence on or substantive control over a covered transaction are:

(1) Principal investigators.

Proposal. A solicited or unsolicited bid, application, request, invitation to consider or similar communication by or on behalf of a person seeking to participate or to receive a benefit, directly or indirectly, in or under a covered transaction.

Respondent. A person against whom a debarment or suspension action has been initiated.

State. Any of the States of the United States, the District of Columbia, the Commonwealth of Puerto Rico, any territory or possession of the United States, or any agency of a State, exclusive of institutions of higher education, hospitals, and units of local government. A State instrumentality will be considered part of the State government if it has a written determination from a State government that such State considers that instrumentality to be an agency of the State government.

Suspending official. An official authorized to impose suspension. The suspending official is either:

(1) The agency head, or

(2) An official designated by the agency head.

Suspension. An action taken by a suspending official in accordance with these regulations that immediately excludes a person from participating in covered transactions for a temporary period, pending completion of an investigation and such legal, debarment, or Program Fraud Civil Remedies Act proceedings as may ensue. A person so excluded is ''suspended.''

Voluntary exclusion or voluntarily excluded. A status of nonparticipation or limited participation in covered transactions assumed by a person pursuant to the terms of a settlement.

NARA. National Archives and Records Administration.

[53 FR 19193, 19194, 19204, May 26, 1988, as amended at 60 FR 33040, 33058, June 26, 1995]

§ 1209.110 Coverage.

(a) These regulations apply to all persons who have participated, are currently participating or may reasonably be expected to participate in transactions under Federal nonprocurement programs. For purposes of these regulations such transactions will be referred to as ''covered transactions.''

(1) *Covered transaction.* For purposes of these regulations, a covered transaction is a primary covered transaction or a lower tier covered transaction. Covered transactions at any tier need not involve the transfer of Federal funds.

(i) *Primary covered transaction.* Except as noted in paragraph (a)(2) of this section, a primary covered transaction is any nonprocurement transaction between an agency and a person, regardless of type, including: grants, cooperative agreements, scholarships, fellowships, contracts of assistance, loans, loan guarantees, subsidies, insurance, payments for specified use, donation agreements and any other nonprocurement transactions between a Federal agency and a person. Primary covered transactions also include those transactions specially designated by the U.S. Department of Housing and Urban Development in such agency's regulations governing debarment and suspension.

(ii) *Lower tier covered transaction.* A lower tier covered transaction is:

(A) Any transaction between a participant and a person other than a procurement contract for goods or services, regardless of type, under a primary covered transaction.

(B) Any procurement contract for goods or services between a participant

and a person, regardless of type, expected to equal or exceed the Federal procurement small purchase threshold fixed at 10 U.S.C. 2304(g) and 41 U.S.C. 253(g) (currently $25,000) under a primary covered transaction.

(C) Any procurement contract for goods or services between a participant and a person under a covered transaction, regardless of amount, under which that person will have a critical influence on or substantive control over that covered transaction. Such persons are:

(*1*) Principal investigators.

(*2*) Providers of federally-required audit services.

(2) *Exceptions.* The following transactions are not covered:

(i) Statutory entitlements or mandatory awards (but not subtier awards thereunder which are not themselves mandatory), including deposited funds insured by the Federal Government;

(ii) Direct awards to foreign governments or public international organizations, or transactions with foreign governments or foreign governmental entities, public international organizations, foreign government owned (in whole or in part) or controlled entities, entities consisting wholly or partially of foreign governments or foreign governmental entities;

(iii) Benefits to an individual as a personal entitlement without regard to the individual's present responsibility (but benefits received in an individual's business capacity are not excepted);

(iv) Federal employment;

(v) Transactions pursuant to national or agency-recognized emergencies or disasters;

(vi) Incidental benefits derived from ordinary governmental operations; and

(vii) Other transactions where the application of these regulations would be prohibited by law.

(b) *Relationship to other sections.* This section describes the types of transactions to which a debarment or suspension under the regulations will apply. Subpart B, ''Effect of Action,'' § 1209.200, ''Debarment or suspension,'' sets forth the consequences of a debarment or suspension. Those consequences would obtain only with respect to participants and principals in the covered transactions and activities described in § 1209.110(a). Sections 1209.325, ''Scope of debarment,'' and 1209.420, ''Scope of suspension,'' govern the extent to which a specific participant or organizational elements of a participant would be automatically included within a debarment or suspension action, and the conditions under which affiliates or persons associated with a participant may also be brought within the scope of the action.

(c) *Relationship to Federal procurement activities.* In accordance with E.O. 12689 and section 2455 of Public Law 103–355, any debarment, suspension, proposed debarment or other governmentwide exclusion initiated under the Federal Acquisition Regulation (FAR) on or after August 25, 1995 shall be recognized by and effective for Executive Branch agencies and participants as an exclusion under this regulation. Similarly, any debarment, suspension or other governmentwide exclusion initiated under this regulation on or after August 25, 1995 shall be recognized by and effective for those agencies as a debarment or suspension under the FAR.

[53 FR 19193, 19194, 19204, May 26, 1988, as amended at 60 FR 33041, 33058, June 26, 1995]

§ 1209.115 Policy.

(a) In order to protect the public interest, it is the policy of the Federal Government to conduct business only with responsible persons. Debarment and suspension are discretionary actions that, taken in accordance with Executive Order 12549 and these regulations, are appropriate means to implement this policy.

(b) Debarment and suspension are serious actions which shall be used only in the public interest and for the Federal Government's protection and not for purposes of punishment. Agencies may impose debarment or suspension for the causes and in accordance with the procedures set forth in these regulations.

(c) When more than one agency has an interest in the proposed debarment or suspension of a person, consideration shall be given to designating one agency as the lead agency for making the decision. Agencies are encouraged to establish methods and procedures for coordinating their debarment or suspension actions.

Subpart B—Effect of Action

§ 1209.200 Debarment or suspension.

(a) *Primary covered transactions.* Except to the extent prohibited by law, persons who are debarred or suspended shall be excluded from primary covered transactions as either participants or principals throughout the Executive Branch of the Federal Government for the period of their debarment, suspension, or the period they are proposed for debarment under 48 CFR part 9, subpart 9.4. Accordingly, no agency shall enter into primary covered transactions with such excluded persons during such period, except as permitted pursuant to § 1209.215.

(b) *Lower tier covered transactions.* Except to the extent prohibited by law, persons who have been proposed for debarment under 48 CFR part 9, subpart 9.4, debarred or suspended shall be excluded from participating as either participants or principals in all lower tier covered transactions (see § 1209.110(a)(1)(ii)) for the period of their exclusion.

(c) *Exceptions.* Debarment or suspension does not affect a person's eligibility for—

(1) Statutory entitlements or mandatory awards (but not subtier awards thereunder which are not themselves mandatory), including deposited funds insured by the Federal Government;

(2) Direct awards to foreign governments or public international organizations, or transactions with foreign governments or foreign governmental entities, public international organizations, foreign government owned (in whole or in part) or controlled entities, and entities consisting wholly or partially of foreign governments or foreign governmental entities;

(3) Benefits to an individual as a personal entitlement without regard to the individual's present responsibility (but benefits received in an individual's business capacity are not excepted);

(4) Federal employment;

(5) Transactions pursuant to national or agency-recognized emergencies or disasters;

(6) Incidental benefits derived from ordinary governmental operations; and

(7) Other transactions where the application of these regulations would be prohibited by law.

[60 FR 33041, 33058, June 26, 1995]

§ 1209.205 Ineligible persons.

Persons who are ineligible, as defined in § 1209.105(i), are excluded in accordance with the applicable statutory, executive order, or regulatory authority.

§ 1209.210 Voluntary exclusion.

Persons who accept voluntary exclusions under § 1209.315 are excluded in accordance with the terms of their settlements. NARA shall, and participants may, contact the original action agency to ascertain the extent of the exclusion.

§ 1209.215 Exception provision.

NARA may grant an exception permitting a debarred, suspended, or voluntarily excluded person, or a person proposed for debarment under 48 CFR part 9, subpart 9.4, to participate in a particular covered transaction upon a written determination by the agency head or an authorized designee stating the reason(s) for deviating from the Presidential policy established by Executive Order 12549 and § 1209.200. However, in accordance with the President's stated intention in the Executive Order, exceptions shall be granted only infrequently. Exceptions shall be reported in accordance with § 1209.505(a).

[60 FR 33041, 33058, June 26, 1995]

§ 1209.220 Continuation of covered transactions.

(a) Notwithstanding the debarment, suspension, proposed debarment under 48 CFR part 9, subpart 9.4, determination of ineligibility, or voluntary exclusion of any person by an agency, agencies and participants may continue covered transactions in existence at the time the person was debarred, suspended, proposed for debarment under 48 CFR part 9, subpart 9.4, declared ineligible, or voluntarily excluded. A decision as to the type of termination action, if any, to be taken should be made only after thorough review to ensure the propriety of the proposed action.

(b) Agencies and participants shall not renew or extend covered transactions (other than no-cost time extensions) with any person who is debarred, suspended, proposed for debarment under 48 CFR part 9, subpart 9.4, ineligible or voluntary excluded, except as provided in § 1209.215.

[60 FR 33041, 33058, June 26, 1995]

§ 1209.225 Failure to adhere to restrictions.

(a) Except as permitted under § 1209.215 or § 1209.220, a participant shall not knowingly do business under a covered transaction with a person who is—

(1) Debarred or suspended;

(2) Proposed for debarment under 48 CFR part 9, subpart 9.4; or

(3) Ineligible for or voluntarily excluded from the covered transaction.

(b) Violation of the restriction under paragraph (a) of this section may result in disallowance of costs, annulment or termination of award, issuance of a stop work order, debarment or suspension, or other remedies as appropriate.

(c) A participant may rely upon the certification of a prospective participant in a lower tier covered transaction that it and its principals are not debarred, suspended, proposed for debarment under 48 CFR part 9, subpart 9.4, ineligible, or voluntarily excluded from the covered transaction (See Appendix B of these regulations), unless it knows that the certification is erroneous. An agency has the burden of proof that a participant did knowingly do business with a person that filed an erroneous certification.

[60 FR 33041, 33058, June 26, 1995]

Subpart C—Debarment

§ 1209.300 General.

The debarring official may debar a person for any of the causes in § 1209.305, using procedures established in §§ 1209.310 through 1209.314. The existence of a cause for debarment, however, does not necessarily require that the person be debarred; the seriousness of the person's acts or omissions and any mitigating factors shall be considered in making any debarment decision.

§ 1209.305 Causes for debarment.

Debarment may be imposed in accordance with the provisions of §§ 1209.300 through 1209.314 for:

(a) Conviction of or civil judgment for:

(1) Commission of fraud or a criminal offense in connection with obtaining, attempting to obtain, or performing a public or private agreement or transaction;

(2) Violation of Federal or State antitrust statutes, including those proscribing price fixing between competitors, allocation of customers between competitors, and bid rigging;

(3) Commission of embezzlement, theft, forgery, bribery, falsification or destruction of records, making false statements, receiving stolen property, making false claims, or obstruction of justice; or

(4) Commission of any other offense indicating a lack of business integrity or business honesty that seriously and directly affects the present responsibility of a person.

(b) Violation of the terms of a public agreement or transaction so serious as to affect the integrity of an agency program, such as:

(1) A willful failure to perform in accordance with the terms of one or more public agreements or transactions;

(2) A history of failure to perform or of unsatisfactory performance of one or more public agreements or transactions; or

(3) A willful violation of a statutory or regulatory provision or requirement applicable to a public agreement or transaction.

(c) Any of the following causes:

(1) A nonprocurement debarment by any Federal agency taken before October 1, 1988, the effective date of these regulations, or a procurement debarment by any Federal agency taken pursuant to 48 CFR subpart 9.4;

(2) Knowingly doing business with a debarred, suspended, ineligible, or voluntarily excluded person, in connection with a covered transaction, except as permitted in § 1209.215 or § 1209.220;

(3) Failure to pay a single substantial debt, or a number of outstanding debts

(including disallowed costs and overpayments, but not including sums owed the Federal Government under the Internal Revenue Code) owed to any Federal agency or instrumentality, provided the debt is uncontested by the debtor or, if contested, provided that the debtor's legal and administrative remedies have been exhausted;

(4) Violation of a material provision of a voluntary exclusion agreement entered into under § 1209.315 or of any settlement of a debarment or suspension action; or

(5) Violation of any requirement of subpart F of this part, relating to providing a drug-free workplace, as set forth in § 1209.615 of this part.

(d) Any other cause of so serious or compelling a nature that it affects the present responsibility of a person.

[53 FR 19193, 19194, 19204, May 26, 1988, as amended at 54 FR 4950, 4961, Jan. 31, 1989]

§ 1209.310 Procedures.

NARA shall process debarment actions as informally as practicable, consistent with the principles of fundamental fairness, using the procedures in §§ 1209.311 through 1209.314.

§ 1209.311 Investigation and referral.

Information concerning the existence of a cause for debarment from any source shall be promptly reported, investigated, and referred, when appropriate, to the debarring official for consideration. After consideration, the debarring official may issue a notice of proposed debarment.

§ 1209.312 Notice of proposed debarment.

A debarment proceeding shall be initiated by notice to the respondent advising:

(a) That debarment is being considered;

(b) Of the reasons for the proposed debarment in terms sufficient to put the respondent on notice of the conduct or transaction(s) upon which it is based;

(c) Of the cause(s) relied upon under § 1209.305 for proposing debarment;

(d) Of the provisions of § 1209.311 through § 1209.314, and any other NARA procedures, if applicable, governing debarment decisionmaking; and

(e) Of the potential effect of a debarment.

§ 1209.313 Opportunity to contest proposed debarment.

(a) *Submission in opposition.* Within 30 days after receipt of the notice of proposed debarment, the respondent may submit, in person, in writing, or through a representative, information and argument in opposition to the proposed debarment.

(b) *Additional proceedings as to disputed material facts.* (1) In actions not based upon a conviction or civil judgment, if the debarring official finds that the respondent's submission in opposition raises a genuine dispute over facts material to the proposed debarment, respondent(s) shall be afforded an opportunity to appear with a representative, submit documentary evidence, present witnesses, and confront any witness the agency presents.

(2) A transcribed record of any additional proceedings shall be made available at cost to the respondent, upon request, unless the respondent and the agency, by mutual agreement, waive the requirement for a transcript.

§ 1209.314 Debarring official's decision.

(a) *No additional proceedings necessary.* In actions based upon a conviction or civil judgment, or in which there is no genuine dispute over material facts, the debarring official shall make a decision on the basis of all the information in the administrative record, including any submission made by the respondent. The decision shall be made within 45 days after receipt of any information and argument submitted by the respondent, unless the debarring official extends this period for good cause.

(b) *Additional proceedings necessary.* (1) In actions in which additional proceedings are necessary to determine disputed material facts, written findings of fact shall be prepared. The debarring official shall base the decision on the facts as found, together with any information and argument submitted by the respondent and any other information in the administrative record.

(2) The debarring official may refer disputed material facts to another official for findings of fact. The debarring official may reject any such findings, in whole or in part, only after specifically determining them to be arbitrary and capricious or clearly erroneous.

(3) The debarring official's decision shall be made after the conclusion of the proceedings with respect to disputed facts.

(c)(1) *Standard of proof.* In any debarment action, the cause for debarment must be established by a preponderance of the evidence. Where the proposed debarment is based upon a conviction or civil judgment, the standard shall be deemed to have been met.

(2) *Burden of proof.* The burden of proof is on the agency proposing debarment.

(d) *Notice of debarring official's decision.* (1) If the debarring official decides to impose debarment, the respondent shall be given prompt notice:

(i) Referring to the notice of proposed debarment;

(ii) Specifying the reasons for debarment;

(iii) Stating the period of debarment, including effective dates; and

(iv) Advising that the debarment is effective for covered transactions throughout the executive branch of the Federal Government unless an agency head or an authorized designee makes the determination referred to in § 1209.215.

(2) If the debarring official decides not to impose debarment, the respondent shall be given prompt notice of that decision. A decision not to impose debarment shall be without prejudice to a subsequent imposition of debarment by any other agency.

§ 1209.315 Settlement and voluntary exclusion.

(a) When in the best interest of the Government, NARA may, at any time, settle a debarment or suspension action.

(b) If a participant and the agency agree to a voluntary exclusion of the participant, such voluntary exclusion shall be entered on the Nonprocurement List (see subpart E).

§ 1209.320 Period of debarment.

(a) Debarment shall be for a period commensurate with the seriousness of the cause(s). If a suspension precedes a debarment, the suspension period shall be considered in determining the debarment period.

(1) Debarment for causes other than those related to a violation of the requirements of subpart F of this part generally should not exceed three years. Where circumstances warrant, a longer period of debarment may be imposed.

(2) In the case of a debarment for a violation of the requirements of subpart F of this part (*see* § 1209.305(c)(5)), the period of debarment shall not exceed five years.

(b) The debarring official may extend an existing debarment for an additional period, if that official determines that an extension is necessary to protect the public interest. However, a debarment may not be extended solely on the basis of the facts and circumstances upon which the initial debarment action was based. If debarment for an additional period is determined to be necessary, the procedures of §§ 1209.311 through 1209.314 shall be followed to extend the debarment.

(c) The respondent may request the debarring official to reverse the debarment decision or to reduce the period or scope of debarment. Such a request shall be in writing and supported by documentation. The debarring official may grant such a request for reasons including, but not limited to:

(1) Newly discovered material evidence;

(2) Reversal of the conviction or civil judgment upon which the debarment was based;

(3) Bona fide change in ownership or management;

(4) Elimination of other causes for which the debarment was imposed; or

(5) Other reasons the debarring official deems appropriate.

[53 FR 19193, 19194, 19204, May 26, 1988, as amended at 54 FR 4950, 4961, Jan. 31, 1989]

§ 1209.325 Scope of debarment.

(a) *Scope in general.* (1) Debarment of a person under these regulations constitutes debarment of all its divisions

and other organizational elements from all covered transactions, unless the debarment decision is limited by its terms to one or more specifically identified individuals, divisions or other organizational elements or to specific types of transactions.

(2) The debarment action may include any affiliate of the participant that is specifically named and given notice of the proposed debarment and an opportunity to respond (see §§ 1209.311 through 1209.314).

(b) *Imputing conduct.* For purposes of determining the scope of debarment, conduct may be imputed as follows:

(1) *Conduct imputed to participant.* The fraudulent, criminal or other seriously improper conduct of any officer, director, shareholder, partner, employee, or other individual associated with a participant may be imputed to the participant when the conduct occurred in connection with the individual's performance of duties for or on behalf of the participant, or with the participant's knowledge, approval, or acquiescence. The participant's acceptance of the benefits derived from the conduct shall be evidence of such knowledge, approval, or acquiescence.

(2) *Conduct imputed to individuals associated with participant.* The fraudulent, criminal, or other seriously improper conduct of a participant may be imputed to any officer, director, shareholder, partner, employee, or other individual associated with the participant who participated in, knew of, or had reason to know of the participant's conduct.

(3) *Conduct of one participant imputed to other participants in a joint venture.* The fraudulent, criminal, or other seriously improper conduct of one participant in a joint venture, grant pursuant to a joint application, or similar arrangement may be imputed to other participants if the conduct occurred for or on behalf of the joint venture, grant pursuant to a joint application, or similar arrangement may be imputed to other participants if the conduct occurred for or on behalf of the joint venture, grant pursuant to a joint application, or similar arrangement or with the knowledge, approval, or acquiescence of these participants. Acceptance of the benefits derived from the conduct shall be evidence of such knowledge, approval, or acquiescence.

Subpart D—Suspension

§ 1209.400 General.

(a) The suspending official may suspend a person for any of the causes in § 1209.405 using procedures established in §§ 1209.410 through 1209.413.

(b) Suspension is a serious action to be imposed only when:

(1) There exists adequate evidence of one or more of the causes set out in § 1209.405, and

(2) Immediate action is necessary to protect the public interest.

(c) In assessing the adequacy of the evidence, the agency should consider how much information is available, how credible it is given the circumstances, whether or not important allegations are corroborated, and what inferences can reasonably be drawn as a result. This assessment should include an examination of basic documents such as grants, cooperative agreements, loan authorizations, and contracts.

§ 1209.405 Causes for suspension.

(a) Suspension may be imposed in accordance with the provisions of §§ 1209.400 through 1209.413 upon adequate evidence:

(1) To suspect the commission of an offense listed in § 1209.305(a); or

(2) That a cause for debarment under § 1209.305 may exist.

(b) Indictment shall constitute adequate evidence for purposes of suspension actions.

§ 1209.410 Procedures.

(a) *Investigation and referral.* Information concerning the existence of a cause for suspension from any source shall be promptly reported, investigated, and referred, when appropriate, to the suspending official for consideration. After consideration, the suspending official may issue a notice of suspension.

(b) *Decisionmaking process.* NARA shall process suspension actions as informally as practicable, consistent with principles of fundamental fairness, using the procedures in § 1209.411 through § 1209.413.

§ 1209.411 Notice of suspension.

When a respondent is suspended, notice shall immediately be given:

(a) That suspension has been imposed;

(b) That the suspension is based on an indictment, conviction, or other adequate evidence that the respondent has committed irregularities seriously reflecting on the propriety of further Federal Government dealings with the respondent;

(c) Describing any such irregularities in terms sufficient to put the respondent on notice without disclosing the Federal Government's evidence;

(d) Of the cause(s) relied upon under § 1209.405 for imposing suspension;

(e) That the suspension is for a temporary period pending the completion of an investigation or ensuing legal, debarment, or Program Fraud Civil Remedies Act proceedings;

(f) Of the provisions of § 1209.411 through § 1209.413 and any other NARA procedures, if applicable, governing suspension decisionmaking; and

(g) Of the effect of the suspension.

§ 1209.412 Opportunity to contest suspension.

(a) *Submission in opposition.* Within 30 days after receipt of the notice of suspension, the respondent may submit, in person, in writing, or through a representative, information and argument in opposition to the suspension.

(b) *Additional proceedings as to disputed material facts.* (1) If the suspending official finds that the respondent's submission in opposition raises a genuine dispute over facts material to the suspension, respondent(s) shall be afforded an opportunity to appear with a representative, submit documentary evidence, present witnesses, and confront any witness the agency presents, unless:

(i) The action is based on an indictment, conviction or civil judgment, or

(ii) A determination is made, on the basis of Department of Justice advice, that the substantial interests of the Federal Government in pending or contemplated legal proceedings based on the same facts as the suspension would be prejudiced.

(2) A transcribed record of any additional proceedings shall be prepared and made available at cost to the respondent, upon request, unless the respondent and the agency, by mutual agreement, waive the requirement for a transcript.

§ 1209.413 Suspending official's decision.

The suspending official may modify or terminate the suspension (for example, see § 1209.320(c) for reasons for reducing the period or scope of debarment) or may leave it in force. However, a decision to modify or terminate the suspension shall be without prejudice to the subsequent imposition of suspension by any other agency or debarment by any agency. The decision shall be rendered in accordance with the following provisions:

(a) *No additional proceedings necessary.* In actions: based on an indictment, conviction, or civil judgment; in which there is no genuine dispute over material facts; or in which additional proceedings to determine disputed material facts have been denied on the basis of Department of Justice advice, the suspending official shall make a decision on the basis of all the information in the administrative record, including any submission made by the respondent. The decision shall be made within 45 days after receipt of any information and argument submitted by the respondent, unless the suspending official extends this period for good cause.

(b) *Additional proceedings necessary.* (1) In actions in which additional proceedings are necessary to determine disputed material facts, written findings of fact shall be prepared. The suspending official shall base the decision on the facts as found, together with any information and argument submitted by the respondent and any other information in the administrative record.

(2) The suspending official may refer matters involving disputed material facts to another official for findings of fact. The suspending official may reject any such findings, in whole or in part, only after specifically determining them to be arbitrary or capricious or clearly erroneous.

(c) *Notice of suspending official's decision.* Prompt written notice of the suspending official's decision shall be sent to the respondent.

§ 1209.415 Period of suspension.

(a) Suspension shall be for a temporary period pending the completion of an investigation or ensuing legal, debarment, or Program Fraud Civil Remedies Act proceedings, unless terminated sooner by the suspending official or as provided in paragraph (b) of this section.

(b) If legal or administrative proceedings are not initiated within 12 months after the date of the suspension notice, the suspension shall be terminated unless an Assistant Attorney General or United States Attorney requests its extension in writing, in which case it may be extended for an additional six months. In no event may a suspension extend beyond 18 months, unless such proceedings have been initiated within that period.

(c) The suspending official shall notify the Department of Justice of an impending termination of a suspension, at least 30 days before the 12-month period expires, to give that Department an opportunity to request an extension.

§ 1209.420 Scope of suspension.

The scope of a suspension is the same as the scope of a debarment (see § 1209.325), except that the procedures of §§ 1209.410 through 1209.413 shall be used in imposing a suspension.

Subpart E—Responsibilities of GSA, Agency and Participants

§ 1209.500 GSA responsibilities.

(a) In accordance with the OMB guidelines, GSA shall compile, maintain, and distribute a list of all persons who have been debarred, suspended, or voluntarily excluded by agencies under Executive Order 12549 and these regulations, and those who have been determined to be ineligible.

(b) At a minimum, this list shall indicate:

(1) The names and addresses of all debarred, suspended, ineligible, and voluntarily excluded persons, in alphabetical order, with cross-references when more than one name is involved in a single action;

(2) The type of action;

(3) The cause for the action;

(4) The scope of the action;

(5) Any termination date for each listing; and

(6) The agency and name and telephone number of the agency point of contact for the action.

§ 1209.505 NARA responsibilities.

(a) The agency shall provide GSA with current information concerning debarments, suspension, determinations of ineligibility, and voluntary exclusions it has taken. Until February 18, 1989, the agency shall also provide GSA and OMB with information concerning all transactions in which NARA has granted exceptions under § 1209.215 permitting participation by debarred, suspended, or voluntarily excluded persons.

(b) Unless an alternative schedule is agreed to by GSA, the agency shall advise GSA of the information set forth in § 1209.500(b) and of the exceptions granted under § 1209.215 within five working days after taking such actions.

(c) The agency shall direct inquiries concerning listed persons to the agency that took the action.

(d) Agency officials shall check the Nonprocurement List before entering covered transactions to determine whether a participant in a primary transaction is debarred, suspended, ineligible, or voluntarily excluded (Tel. #).

(e) Agency officials shall check the Nonprocurement List before approving principals or lower tier participants where agency approval of the principal or lower tier participant is required under the terms of the transaction, to determine whether such principals or participants are debarred, suspended, ineligible, or voluntarily excluded.

§ 1209.510 Participants' responsibilities.

(a) *Certification by participants in primary covered transactions.* Each participant shall submit the certification in appendix A to this part for it and its principals at the time the participant submits its proposal in connection with

a primary covered transaction, except that States need only complete such certification as to their principals. Participants may decide the method and frequency by which they determine the eligibility of their principals. In addition, each participant may, but is not required to, check the Nonprocurement List for its principals (Tel. #). Adverse information on the certification will not necessarily result in denial of participation. However, the certification, and any additional information pertaining to the certification submitted by the participant, shall be considered in the administration of covered transactions.

(b) *Certification by participants in lower tier covered transactions.* (1) Each participant shall require participants in lower tier covered transactions to include the certification in appendix B to this part for it and its principals in any proposal submitted in connection with such lower tier covered transactions.

(2) A participant may rely upon the certification of a prospective participant in a lower tier covered transaction that it and its principals are not debarred, suspended, ineligible, or voluntarily excluded from the covered transaction by any Federal agency, unless it knows that the certification is erroneous. Participants may decide the method and frequency by which they determine the eligiblity of their principals. In addition, a participant may, but is not required to, check the Nonprocurement List for its principals and for participants (Tel.).

(c) *Changed circumstances regarding certification.* A participant shall provide immediate written notice to NARA if at any time the participant learns that its certification was erroneous when submitted or has become erroneous by reason of changed circumstances. Participants in lower tier covered transactions shall provide the same updated notice to the participant to which it submitted its proposals.

Subpart F—Drug-Free Workplace Requirements (Grants)

SOURCE: 55 FR 21688, 21700, May 25, 1990, unless otherwise noted.

§ 1209.600 Purpose.

(a) The purpose of this subpart is to carry out the Drug-Free Workplace Act of 1988 by requiring that—

(1) A grantee, other than an individual, shall certify to the agency that it will provide a drug-free workplace;

(2) A grantee who is an individual shall certify to the agency that, as a condition of the grant, he or she will not engage in the unlawful manufacture, distribution, dispensing, possession or use of a controlled substance in conducting any activity with the grant.

(b) Requirements implementing the Drug-Free Workplace Act of 1988 for contractors with the agency are found at 48 CFR subparts 9.4, 23.5, and 52.2.

§ 1209.605 Definitions.

(a) Except as amended in this section, the definitions of § 1209.105 apply to this subpart.

(b) For purposes of this subpart—

(1) *Controlled substance* means a controlled substance in schedules I through V of the Controlled Substances Act (21 U.S.C. 812), and as further defined by regulation at 21 CFR 1308.11 through 1308.15;

(2) *Conviction* means a finding of guilt (including a plea of nolo contendere) or imposition of sentence, or both, by any judicial body charged with the responsibility to determine violations of the Federal or State criminal drug statutes;

(3) *Criminal drug statute* means a Federal or non-Federal criminal statute involving the manufacture, distribution, dispensing, use, or possession of any controlled substance;

(4) *Drug-free workplace* means a site for the performance of work done in connection with a specific grant at which employees of the grantee are prohibited from engaging in the unlawful manufacture, distribution, dispensing, possession, or use of a controlled substance;

(5) *Employee* means the employee of a grantee directly engaged in the performance of work under the grant, including:

(i) All *direct charge* employees;

(ii) All *indirect charge* employees, unless their impact or involvement is insignificant to the performance of the grant; and,

(iii) Temporary personnel and consultants who are directly engaged in the performance of work under the grant and who are on the grantee's payroll.

This definition does not include workers not on the payroll of the grantee (e.g., volunteers, even if used to meet a matching requirement; consultants or independent contractors not on the payroll; or employees of subrecipients or subcontractors in covered workplaces);

(6) *Federal agency* or *agency* means any United States executive department, military department, government corporation, government controlled corporation, any other establishment in the executive branch (including the Executive Office of the President), or any independent regulatory agency;

(7) *Grant* means an award of financial assistance, including a cooperative agreement, in the form of money, or property in lieu of money, by a Federal agency directly to a grantee. The term grant includes block grant and entitlement grant programs, whether or not exempted from coverage under the grants management government-wide common rule on uniform administrative requirements for grants and cooperative agreements. The term does not include technical assistance that provides services instead of money, or other assistance in the form of loans, loan guarantees, interest subsidies, insurance, or direct appropriations; or any veterans' benefits to individuals, i.e., any benefit to veterans, their families, or survivors by virtue of the service of a veteran in the Armed Forces of the United States;

(8) *Grantee* means a person who applies for or receives a grant directly from a Federal agency (except another Federal agency);

(9) *Individual* means a natural person;

(10) *State* means any of the States of the United States, the District of Columbia, the Commonwealth of Puerto Rico, any territory or possession of the United States, or any agency of a State, exclusive of institutions of higher education, hospitals, and units of local government. A State instrumentality will be considered part of the State government if it has a written determination from a State government that such State considers the instrumentality to be an agency of the State government.

§ 1209.610 Coverage.

(a) This subpart applies to any grantee of the agency.

(b) This subpart applies to any grant, except where application of this subpart would be inconsistent with the international obligations of the United States or the laws or regulations of a foreign government. A determination of such inconsistency may be made only by the agency head or his/her designee.

(c) The provisions of subparts A, B, C, D and E of this part apply to matters covered by this subpart, except where specifically modified by this subpart. In the event of any conflict between provisions of this subpart and other provisions of this part, the provisions of this subpart are deemed to control with respect to the implementation of drug-free workplace requirements concerning grants.

§ 1209.615 Grounds for suspension of payments, suspension or termination of grants, or suspension or debarment.

A grantee shall be deemed in violation of the requirements of this subpart if the agency head or his or her official designee determines, in writing, that—

(a) The grantee has made a false certification under § 1209.630;

(b) With respect to a grantee other than an individual—

(1) The grantee has violated the certification by failing to carry out the requirements of paragraphs (A)(a)–(g) and/or (B) of the certification (alternate I to appendix C) or

(2) Such a number of employees of the grantee have been convicted of violations of criminal drug statutes for violations occurring in the workplace as to indicate that the grantee has failed to make a good faith effort to provide a drug-free workplace.

(c) With respect to a grantee who is an individual—

(1) The grantee has violated the certification by failing to carry out its requirements (alternate II to appendix C); or

(2) The grantee is convicted of a criminal drug offense resulting from a violation occurring during the conduct of any grant activity.

§ 1209.620 Effect of violation.

(a) In the event of a violation of this subpart as provided in § 1209.615, and in accordance with applicable law, the grantee shall be subject to one or more of the following actions:

(1) Suspension of payments under the grant;

(2) Suspension or termination of the grant; and

(3) Suspension or debarment of the grantee under the provisions of this part.

(b) Upon issuance of any final decision under this part requiring debarment of a grantee, the debarred grantee shall be ineligible for award of any grant from any Federal agency for a period specified in the decision, not to exceed five years (*see* § 1209.320(a)(2) of this part).

§ 1209.625 Exception provision.

The agency head may waive with respect to a particular grant, in writing, a suspension of payments under a grant, suspension or termination of a grant, or suspension or debarment of a grantee if the agency head determines that such a waiver would be in the public interest. This exception authority cannot be delegated to any other official.

§ 1209.630 Certification requirements and procedures.

(a)(1) As a prior condition of being awarded a grant, each grantee shall make the appropriate certification to the Federal agency providing the grant, as provided in appendix C to this part.

(2) Grantees are not required to make a certification in order to continue receiving funds under a grant awarded before March 18, 1989, or under a no-cost time extension of such a grant. However, the grantee shall make a one-time drug-free workplace certification for a non-automatic continuation of such a grant made on or after March 18, 1989.

(b) Except as provided in this section, all grantees shall make the required certification for each grant. For mandatory formula grants and entitlements that have no application process, grantees shall submit a one-time certification in order to continue receiving awards.

(c) A grantee that is a State may elect to make one certification in each Federal fiscal year. States that previously submitted an annual certification are not required to make a certification for Fiscal Year 1990 until June 30, 1990. Except as provided in paragraph (d) of this section, this certification shall cover all grants to all State agencies from any Federal agency. The State shall retain the original of this statewide certification in its Governor's office and, prior to grant award, shall ensure that a copy is submitted individually with respect to each grant, unless the Federal agency has designated a central location for submission.

(d)(1) The Governor of a State may exclude certain State agencies from the statewide certification and authorize these agencies to submit their own certifications to Federal agencies. The statewide certification shall name any State agencies so excluded.

(2) A State agency to which the statewide certification does not apply, or a State agency in a State that does not have a statewide certification, may elect to make one certification in each Federal fiscal year. State agencies that previously submitted a State agency certification are not required to make a certification for Fiscal Year 1990 until June 30, 1990. The State agency shall retain the original of this State agency-wide certification in its central office and, prior to grant award, shall ensure that a copy is submitted individually with respect to each grant, unless the Federal agency designates a central location for submission.

(3) When the work of a grant is done by more than one State agency, the certification of the State agency directly receiving the grant shall be deemed to certify compliance for all

workplaces, including those located in other State agencies.

(e)(1) For a grant of less than 30 days performance duration, grantees shall have this policy statement and program in place as soon as possible, but in any case by a date prior to the date on which performance is expected to be completed.

(2) For a grant of 30 days or more performance duration, grantees shall have this policy statement and program in place within 30 days after award.

(3) Where extraordinary circumstances warrant for a specific grant, the grant officer may determine a different date on which the policy statement and program shall be in place.

§ 1209.635 Reporting of and employee sanctions for convictions of criminal drug offenses.

(a) When a grantee other than an individual is notified that an employee has been convicted for a violation of a criminal drug statute occurring in the workplace, it shall take the following actions:

(1) Within 10 calendar days of receiving notice of the conviction, the grantee shall provide written notice, including the convicted employee's position title, to every grant officer, or other designee on whose grant activity the convicted employee was working, unless a Federal agency has designated a central point for the receipt of such notifications. Notification shall include the identification number(s) for each of the Federal agency's affected grants.

(2) Within 30 calendar days of receiving notice of the conviction, the grantee shall do the following with respect to the employee who was convicted.

(i) Take appropriate personnel action against the employee, up to and including termination, consistent with requirements of the Rehabilitation Act of 1973, as amended; or

(ii) Require the employee to participate satisfactorily in a drug abuse assistance or rehabilitation program approved for such purposes by a Federal, State, or local health, law enforcement, or other appropriate agency.

(b) A grantee who is an individual who is convicted for a violation of a criminal drug statute occurring during the conduct of any grant activity shall report the conviction, in writing, within 10 calendar days, to his or her Federal agency grant officer, or other designee, unless the Federal agency has designated a central point for the receipt of such notices. Notification shall include the identification number(s) for each of the Federal agency's affected grants.

(Approved by the Office of Management and Budget under control number 0991–0002)

APPENDIX A TO PART 1209—CERTIFICATION REGARDING DEBARMENT, SUSPENSION, AND OTHER RESPONSIBILITY MATTERS—PRIMARY COVERED TRANSACTIONS

Instructions for Certification

1. By signing and submitting this proposal, the prospective primary participant is providing the certification set out below.

2. The inability of a person to provide the certification required below will not necessarily result in denial of participation in this covered transaction. The prospective participant shall submit an explanation of why it cannot provide the certification set out below. The certification or explanation will be considered in connection with the department or agency's determination whether to enter into this transaction. However, failure of the prospective primary participant to furnish a certification or an explanation shall disqualify such person from participation in this transaction.

3. The certification in this clause is a material representation of fact upon which reliance was placed when the department or agency determined to enter into this transaction. If it is later determined that the prospective primary participant knowingly rendered an erroneous certification, in addition to other remedies available to the Federal Government, the department or agency may terminate this transaction for cause or default.

4. The prospective primary participant shall provide immediate written notice to the department or agency to which this proposal is submitted if at any time the prospective primary participant learns that its certification was erroneous when submitted or has become erroneous by reason of changed circumstances.

5. The terms *covered transaction, debarred, suspended, ineligible, lower tier covered transaction, participant, person, primary covered transaction, principal, proposal, and voluntarily excluded*, as used in this clause, have the meanings set out in the Definitions and Coverage sections of the rules implementing Executive Order 12549. You may contact the

department or agency to which this proposal is being submitted for assistance in obtaining a copy of those regulations.

6. The prospective primary participant agrees by submitting this proposal that, should the proposed covered transaction be entered into, it shall not knowingly enter into any lower tier covered transaction with a person who is proposed for debarment under 48 CFR part 9, subpart 9.4, debarred, suspended, declared ineligible, or voluntarily excluded from participation in this covered transaction, unless authorized by the department or agency entering into this transaction.

7. The prospective primary participant further agrees by submitting this proposal that it will include the clause titled ''Certification Regarding Debarment, Suspension, Ineligibility and Voluntary Exclusion-Lower Tier Covered Transaction,'' provided by the department or agency entering into this covered transaction, without modification, in all lower tier covered transactions and in all solicitations for lower tier covered transactions.

8. A participant in a covered transaction may rely upon a certification of a prospective participant in a lower tier covered transaction that it is not proposed for debarment under 48 CFR part 9, subpart 9.4, debarred, suspended, ineligible, or voluntarily excluded from the covered transaction, unless it knows that the certification is erroneous. A participant may decide the method and frequency by which it determines the eligibility of its principals. Each participant may, but is not required to, check the List of Parties Excluded from Federal Procurement and Nonprocurement Programs.

9. Nothing contained in the foregoing shall be construed to require establishment of a system of records in order to render in good faith the certification required by this clause. The knowledge and information of a participant is not required to exceed that which is normally possessed by a prudent person in the ordinary course of business dealings.

10. Except for transactions authorized under paragraph 6 of these instructions, if a participant in a covered transaction knowingly enters into a lower tier covered transaction with a person who is proposed for debarment under 48 CFR part 9, subpart 9.4, suspended, debarred, ineligible, or voluntarily excluded from participation in this transaction, in addition to other remedies available to the Federal Government, the department or agency may terminate this transaction for cause or default.

Certification Regarding Debarment, Suspension, and Other Responsibility Matters—Primary Covered Transactions

(1) The prospective primary participant certifies to the best of its knowledge and belief, that it and its principals:

(a) Are not presently debarred, suspended, proposed for debarment, declared ineligible, or voluntarily excluded by any Federal department or agency;

(b) Have not within a three-year period preceding this proposal been convicted of or had a civil judgment rendered against them for commission of fraud or a criminal offense in connection with obtaining, attempting to obtain, or performing a public (Federal, State or local) transaction or contract under a public transaction; violation of Federal or State antitrust statutes or commission of embezzlement, theft, forgery, bribery, falsification or destruction of records, making false statements, or receiving stolen property;

(c) Are not presently indicted for or otherwise criminally or civilly charged by a governmental entity (Federal, State or local) with commission of any of the offenses enumerated in paragraph (1)(b) of this certification; and

(d) Have not within a three-year period preceding this application/proposal had one or more public transactions (Federal, State or local) terminated for cause or default.

(2) Where the prospective primary participant is unable to certify to any of the statements in this certification, such prospective participant shall attach an explanation to this proposal.

[60 FR 33042, 33058, June 26, 1995]

APPENDIX B TO PART 1209—CERTIFICATION REGARDING DEBARMENT, SUSPENSION, INELIGIBILITY AND VOLUNTARY EXCLUSION—LOWER TIER COVERED TRANSACTIONS

Instructions for Certification

1. By signing and submitting this proposal, the prospective lower tier participant is providing the certification set out below.

2. The certification in this clause is a material representation of fact upon which reliance was placed when this transaction was entered into. If it is later determined that the prospective lower tier participant knowingly rendered an erroneous certification, in addition to other remedies available to the Federal Government the department or agency with which this transaction originated may pursue available remedies, including suspension and/or debarment.

3. The prospective lower tier participant shall provide immediate written notice to the person to which this proposal is submitted if at any time the prospective lower

tier participant learns that its certification was erroneous when submitted or had become erroneous by reason of changed circumstances.

4. The terms *covered transaction, debarred, suspended, ineligible, lower tier covered transaction, participant, person, primary covered transaction, principal, proposal,* and *voluntarily excluded,* as used in this clause, have the meaning set out in the Definitions and Coverage sections of rules implementing Executive Order 12549. You may contact the person to which this proposal is submitted for assistance in obtaining a copy of those regulations.

5. The prospective lower tier participant agrees by submitting this proposal that, should the proposed covered transaction be entered into, it shall not knowingly enter into any lower tier covered transaction with a person who is proposed for debarment under 48 CFR part 9, subpart 9.4, debarred, suspended, declared ineligible, or voluntarily excluded from participation in this covered transaction, unless authorized by the department or agency with which this transaction originated.

6. The prospective lower tier participant further agrees by submitting this proposal that it will include this clause titled ''Certification Regarding Debarment, Suspension, Ineligibility and Voluntary Exclusion-Lower Tier Covered Transaction,'' without modification, in all lower tier covered transactions and in all solicitations for lower tier covered transactions.

7. A participant in a covered transaction may rely upon a certification of a prospective participant in a lower tier covered transaction that it is not proposed for debarment under 48 CFR part 9, subpart 9.4, debarred, suspended, ineligible, or voluntarily excluded from covered transactions, unless it knows that the certification is erroneous. A participant may decide the method and frequency by which it determines the eligibility of its principals. Each participant may, but is not required to, check the List of Parties Excluded from Federal Procurement and Nonprocurement Programs.

8. Nothing contained in the foregoing shall be construed to require establishment of a system of records in order to render in good faith the certification required by this clause. The knowledge and information of a participant is not required to exceed that which is normally possessed by a prudent person in the ordinary course of business dealings.

9. Except for transactions authorized under paragraph 5 of these instructions, if a participant in a covered transaction knowingly enters into a lower tier covered transaction with a person who is proposed for debarment under 48 CFR part 9, subpart 9.4, suspended, debarred, ineligible, or voluntarily excluded from participation in this transaction, in addition to other remedies available to the Federal Government, the department or agency with which this transaction originated may pursue available remedies, including suspension and/or debarment.

Certification Regarding Debarment, Suspension, Ineligibility and Voluntary Exclusion—Lower Tier Covered Transactions

(1) The prospective lower tier participant certifies, by submission of this proposal, that neither it nor its principals is presently debarred, suspended, proposed for debarment, declared ineligible, or voluntarily excluded from participation in this transaction by any Federal department or agency.

(2) Where the prospective lower tier participant is unable to certify to any of the statements in this certification, such prospective participant shall attach an explanation to this proposal.

[60 FR 33042, 33058, June 26, 1995]

APPENDIX C TO PART 1209—CERTIFICATION REGARDING DRUG-FREE WORKPLACE REQUIREMENTS

Instructions for Certification

1. By signing and/or submitting this application or grant agreement, the grantee is providing the certification set out below.

2. The certification set out below is a material representation of fact upon which reliance is placed when the agency awards the grant. If it is later determined that the grantee knowingly rendered a false certification, or otherwise violates the requirements of the Drug-Free Workplace Act, the agency, in addition to any other remedies available to the Federal Government, may take action authorized under the Drug-Free Workplace Act.

3. For grantees other than individuals, Alternate I applies.

4. For grantees who are individuals, Alternate II applies.

5. Workplaces under grants, for grantees other than individuals, need not be identified on the certification. If known, they may be identified in the grant application. If the grantee does not identify the workplaces at the time of application, or upon award, if there is no application, the grantee must keep the identity of the workplace(s) on file in its office and make the information available for Federal inspection. Failure to identify all known workplaces constitutes a violation of the grantee's drug-free workplace requirements.

6. Workplace identifications must include the actual address of buildings (or parts of buildings) or other sites where work under the grant takes place. Categorical descriptions may be used (e.g., all vehicles of a mass transit authority or State highway department while in operation, State employees in

each local unemployment office, performers in concert halls or radio studios).

7. If the workplace identified to the agency changes during the performance of the grant, the grantee shall inform the agency of the change(s), if it previously identified the workplaces in question (see paragraph five).

8. Definitions of terms in the Nonprocurement Suspension and Debarment common rule and Drug-Free Workplace common rule apply to this certification. Grantees' attention is called, in particular, to the following definitions from these rules:

Controlled substance means a controlled substance in Schedules I through V of the Controlled Substances Act (21 U.S.C. 812) and as further defined by regulation (21 CFR 1308.11 through 1308.15);

Conviction means a finding of guilt (including a plea of nolo contendere) or imposition of sentence, or both, by any judicial body charged with the responsibility to determine violations of the Federal or State criminal drug statutes;

Criminal drug statute means a Federal or non-Federal criminal statute involving the manufacture, distribution, dispensing, use, or possession of any controlled substance;

Employee means the employee of a grantee directly engaged in the performance of work under a grant, including: (i) All *direct charge* employees; (ii) All *indirect charge* employees unless their impact or involvement is insignificant to the performance of the grant; and, (iii) Temporary personnel and consultants who are directly engaged in the performance of work under the grant and who are on the grantee's payroll. This definition does not include workers not on the payroll of the grantee (e.g., volunteers, even if used to meet a matching requirement; consultants or independent contractors not on the grantee's payroll; or employees of subrecipients or subcontractors in covered workplaces).

Certification Regarding Drug-Free Workplace Requirements

ALTERNATE I. (GRANTEES OTHER THAN INDIVIDUALS)

A. The grantee certifies that it will or will continue to provide a drug-free workplace by:

(a) Publishing a statement notifying employees that the unlawful manufacture, distribution, dispensing, possession, or use of a controlled substance is prohibited in the grantee's workplace and specifying the actions that will be taken against employees for violation of such prohibition;

(b) Establishing an ongoing drug-free awareness program to inform employees about—

(1) The dangers of drug abuse in the workplace;

(2) The grantee's policy of maintaining a drug-free workplace;

(3) Any available drug counseling, rehabilitation, and employee assistance programs; and

(4) The penalties that may be imposed upon employees for drug abuse violations occurring in the workplace;

(c) Making it a requirement that each employee to be engaged in the performance of the grant be given a copy of the statement required by paragraph (a);

(d) Notifying the employee in the statement required by paragraph (a) that, as a condition of employment under the grant, the employee will—

(1) Abide by the terms of the statement; and

(2) Notify the employer in writing of his or her conviction for a violation of a criminal drug statute occurring in the workplace no later than five calendar days after such conviction;

(e) Notifying the agency in writing, within ten calendar days after receiving notice under paragraph (d)(2) from an employee or otherwise receiving actual notice of such conviction. Employers of convicted employees must provide notice, including position title, to every grant officer or other designee on whose grant activity the convicted employee was working, unless the Federal agency has designated a central point for the receipt of such notices. Notice shall include the identification number(s) of each affected grant;

(f) Taking one of the following actions, within 30 calendar days of receiving notice under paragraph (d)(2), with respect to any employee who is so convicted—

(1) Taking appropriate personnel action against such an employee, up to and including termination, consistent with the requirements of the Rehabilitation Act of 1973, as amended; or

(2) Requiring such employee to participate satisfactorily in a drug abuse assistance or rehabilitation program approved for such purposes by a Federal, State, or local health, law enforcement, or other appropriate agency;

(g) Making a good faith effort to continue to maintain a drug-free workplace through implementation of paragraphs (a), (b), (c), (d), (e) and (f).

B. The grantee may insert in the space provided below the site(s) for the performance of work done in connection with the specific grant:

Place of Performance (Street address, city, county, state, zip code)

_____

_____

_____

Check ☐ if there are workplaces on file that are not identified here.

ALTERNATE II. (GRANTEES WHO ARE INDIVIDUALS)

(a) The grantee certifies that, as a condition of the grant, he or she will not engage in the unlawful manufacture, distribution, dispensing, possession, or use of a controlled substance in conducting any activity with the grant;

(b) If convicted of a criminal drug offense resulting from a violation occurring during the conduct of any grant activity, he or she will report the conviction, in writing, within 10 calendar days of the conviction, to every grant officer or other designee, unless the Federal agency designates a central point for the receipt of such notices. When notice is made to such a central point, it shall include the identification number(s) of each affected grant.

[55 FR 21690, 21700, May 25, 1990]

PART 1210—UNIFORM ADMINISTRATIVE REQUIREMENTS FOR GRANTS AND AGREEMENTS WITH INSTITUTIONS OF HIGHER EDUCATION, HOSPITALS, AND OTHER NON-PROFIT ORGANIZATIONS

Subpart A—General

Sec.
1210.1 Purpose.
1210.2 Definitions.
1210.3 Effect on other issuances.
1210.4 Deviations.
1210.5 Subawards.

Subpart B—Pre-Award Requirements

1210.10 Purpose.
1210.11 Pre-award policies.
1210.12 Forms for applying for Federal assistance.
1210.13 Debarment and suspension.
1210.14 Special award conditions.
1210.15 Metric system of measurement.
1210.16 Resource Conservation and Recovery Act.
1210.17 Certifications and representations.

Subpart C—Post-Award Requirements

FINANCIAL AND PROGRAM MANAGEMENT

1210.20 Purpose of financial and program management.
1210.21 Standards for financial management systems.
1210.22 Payment.
1210.23 Cost sharing or matching.
1210.24 Program income.
1210.25 Revision of budget and program plans.
1210.26 Non-Federal audits.
1210.27 Allowable costs.
1210.28 Period of availability of funds.

PROPERTY STANDARDS

1210.30 Purpose of property standards.
1210.31 Insurance coverage.
1210.32 Real property.
1210.33 Federally-owned and exempt property.
1210.34 Equipment.
1210.35 Supplies and other expendable property.
1210.36 Intangible property.
1210.37 Property trust relationship.

PROCUREMENT STANDARDS

1210.40 Purpose of procurement standards.
1210.41 Recipient responsibilities.
1210.42 Codes of conduct.
1210.43 Competition.
1210.44 Procurement procedures.
1210.45 Cost and price analysis.
1210.46 Procurement records.
1210.47 Contract administration.
1210.48 Contract provisions.

REPORTS AND RECORDS

1210.50 Purpose of reports and records.
1210.51 Monitoring and reporting program performance.
1210.52 Financial reporting.
1210.53 Retention and access requirements for records.

TERMINATION AND ENFORCEMENT

1210.60 Purpose of termination and enforcement.
1210.61 Termination.
1210.62 Enforcement.

Subpart D—After-the-Award Requirements

1210.70 Purpose.
1210.71 Closeout procedures.
1210.72 Subsequent adjustments and continuing responsibilities.
1210.73 Collection of amounts due.

APPENDIX A TO PART 1210—CONTRACT PROVISIONS

AUTHORITY: 5 U.S.C. 301; OMB Circular A–110 (64 FR 54926, October 8, 1999).

SOURCE: 60 FR 53515, Oct. 16, 1995, unless otherwise noted.

Subpart A—General

§ 1210.1 Purpose.

This part establishes uniform administrative requirements for NHPRC grants and agreements awarded to institutions of higher education, hospitals, and other non-profit organizations. Non-profit organizations that implement NHPRC programs for the

States are also subject to State requirements.

§ 1210.2 Definitions.

(a) *Accrued expenditures* means the charges incurred by the recipient during a given period requiring the provision of funds for:

(1) Goods and other tangible property received;

(2) Services performed by employees, contractors, subrecipients, and other payees; and,

(3) Other amounts becoming owed under programs for which no current services or performance is required.

(b) *Accrued income* means the sum of:

(1) Earnings during a given period from

(i) Services performed by the recipient, and

(ii) Goods and other tangible property delivered to purchasers, and

(2) Amounts becoming owed to the recipient for which no current services or performance is required by the recipient.

(c) *Acquisition cost of equipment* means the net invoice price of the equipment, including the cost of modifications, attachments, accessories, or auxiliary apparatus necessary to make the property usable for the purpose for which it was acquired. Other charges, such as the cost of installation, transportation, taxes, duty or protective in-transit insurance, shall be included or excluded from the unit acquisition cost in accordance with the recipient's regular accounting practices.

(d) *Advance* means a payment made by Treasury check or other appropriate payment mechanism to a recipient upon its request either before outlays are made by the recipient or through the use of predetermined payment schedules.

(e) *Award* means financial assistance that provides support or stimulation to accomplish a public purpose. Awards include grants and other agreements in the form of money or property in lieu of money, by the NHPRC to an eligible recipient. The term does not include: technical assistance, which provides services instead of money; other assistance in the form of loans, loan guarantees, interest subsidies, or insurance; direct payments of any kind to individuals; and, contracts which are required to be entered into and administered under procurement laws and regulations.

(f) *Cash contributions* means the recipient's cash outlay, including the outlay of money contributed to the recipient by third parties.

(g) *Closeout* means the process by which the NHPRC determines that all applicable administrative actions and all required work of the award have been completed by the recipient and the NHPRC.

(h) *Contract* means a procurement contract under an award or subaward, and a procurement subcontract under a recipient's or subrecipient's contract.

(i) *Cost sharing or matching* means that portion of project or program costs not borne by the NHPRC.

(j) *Date of completion* means the date on which all work under an award is completed or the date on the award document, or any supplement or amendment thereto, on which NHPRC sponsorship ends.

(k) *Disallowed costs* means those charges to an award that the NHPRC determines to be unallowable, in accordance with the applicable Federal cost principles or other terms and conditions contained in the award.

(l) *Equipment* means tangible nonexpendable personal property including exempt property charged directly to the award having a useful life of more than one year and an acquisition cost of $5,000 or more per unit. However, consistent with recipient policy, lower limits may be established.

(m) *Excess property* means property under the control of the NHPRC that, as determined by the head thereof, is no longer required for its needs or the discharge of its responsibilities.

(n) *Exempt property* means tangible personal property acquired in whole or in part with NHPRC funds, where the NHPRC has statutory authority to vest title in the recipient without further obligation to the Federal Government. An example of exempt property authority is contained in the Federal Grant and Cooperative Agreement Act (31 U.S.C. 6306), for property acquired under an award to conduct basic or applied research by a non-profit institution of higher education or non-profit

organization whose principal purpose is conducting scientific research.

(o) *Federal awarding agency* means the Federal agency that provides an award to the recipient.

(p) *Federal funds authorized* means the total amount of NHPRC funds obligated by the Federal Government for use by the recipient. This amount may include any authorized carryover of unobligated funds from prior funding periods when permitted by NHPRC regulations or NHPRC implementing instructions.

(q) *Federal share of real property, equipment, or supplies* means that percentage of the property's acquisition costs and any improvement expenditures paid with NHPRC funds.

(r) *Funding period* means the period of time when NHPRC funding is available for obligation by the recipient.

(s) *Intangible property and debt instruments* means, but is not limited to, trademarks, copyrights, patents and patent applications and such property as loans, notes and other debt instruments, lease agreements, stock and other instruments of property ownership, whether considered tangible or intangible.

(t) *NARA* means the National Archives and Records Administration.

(u) *NHPRC* means the National Historical Publications and Records Commission.

(v) *Obligations* means the amounts of orders placed, contracts and grants awarded, services received and similar transactions during a given period that require payment by the recipient during the same or a future period.

(w) *Outlays or expenditures* means charges made to the project or program. They may be reported on a cash or accrual basis. For reports prepared on a cash basis, outlays are the sum of cash disbursements for direct charges for goods and services, the amount of indirect expense charged, the value of third party in-kind contributions applied and the amount of cash advances and payments made to subrecipients. For reports prepared on an accrual basis, outlays are the sum of cash disbursements for direct charges for goods and services, the amount of indirect expense incurred, the value of in-kind contributions applied, and the net increase (or decrease) in the amounts owed by the recipient for goods and other property received, for services performed by employees, contractors, subrecipients and other payees and other amounts becoming owed under programs for which no current services or performance are required.

(x) *Personal property* means property of any kind except real property. It may be tangible, having physical existence, or intangible, having no physical existence, such as copyrights, patents, or securities.

(y) *Prior approval* means written approval by an authorized official evidencing prior consent.

(z) *Program income* means gross income earned by the recipient that is directly generated by a supported activity or earned as a result of the award (see exclusions in §1210.24 (e) and (h)). Program income includes, but is not limited to, income from fees for services performed, the use or rental of real or personal property acquired under federally-funded projects, the sale of commodities or items fabricated under an award, license fees and royalties on patents and copyrights, and interest on loans made with award funds. Interest earned on advances of Federal funds is not program income. Except as otherwise provided in NHPRC regulations or the terms and conditions of the award, program income does not include the receipt of principal on loans, rebates, credits, discounts, etc., or interest earned on any of them.

(aa) *Project costs* means all allowable costs, as set forth in the applicable Federal cost principles, incurred by a recipient and the value of the contributions made by third parties in accomplishing the objectives of the award during the project period.

(bb) *Project period* means the period established in the award document during which NHPRC sponsorship begins and ends.

(cc) *Property* means, unless otherwise stated, real property, equipment, intangible property and debt instruments.

(dd) *Real property* means land, including land improvements, structures and appurtenances thereto, but excludes movable machinery and equipment.

(ee) *Recipient* means an organization receiving financial assistance directly from the NHPRC to carry out a project or program. The term includes public and private institutions of higher education, public and private hospitals, and other quasi-public and private nonprofit organizations such as, but not limited to, community action agencies, research institutes, educational associations, and health centers. The term may include commercial organizations, foreign or international organizations (such as agencies of the United Nations) which are recipients, subrecipients, or contractors or subcontractors of recipients or subrecipients at the discretion of the NHPRC. The term does not include government-owned contractor-operated facilities or research centers providing continued support for mission-oriented, large-scale programs that are government-owned or controlled, or are designated as federally-funded research and development centers.

(ff) *Research and development* means all research activities, both basic and applied, and all development activities that are supported at universities, colleges, and other non-profit institutions. ''Research'' is defined as a systematic study directed toward fuller scientific knowledge or understanding of the subject studied. ''Development'' is the systematic use of knowledge and understanding gained from research directed toward the production of useful materials, devices, systems, or methods, including design and development of prototypes and processes. The term research also includes activities involving the training of individuals in research techniques where such activities utilize the same facilities as other research and development activities and where such activities are not included in the instruction function.

(gg) *Small awards* means a grant or cooperative agreement not exceeding the small purchase threshold fixed at 41 U.S.C. 403(11) (currently $25,000).

(hh) *Subaward* means an award of financial assistance in the form of money, or property in lieu of money, made under an award by a recipient to an eligible subrecipient or by a subrecipient to a lower tier subrecipient. The term includes financial assistance when provided by any legal agreement, even if the agreement is called a contract, but does not include procurement of goods and services nor does it include any form of assistance which is excluded from the definition of ''award'' in paragraph (e) of this section.

(ii) *Subrecipient* means the legal entity to which a subaward is made and which is accountable to the recipient for the use of the funds provided. The term may include foreign or international organizations (such as agencies of the United Nations) at the discretion of the NHPRC.

(jj) *Supplies* means all personal property excluding equipment, intangible property, and debt instruments as defined in this section, and inventions of a contractor conceived or first actually reduced to practice in the performance of work under a funding agreement (''subject inventions''), as defined in 37 CFR Part 401, ''Rights to Inventions Made by Nonprofit Organizations and Small Business Firms Under Government Grants, Contracts, and Cooperative Agreements.''

(kk) *Suspension* means an action by the NHPRC that temporarily withdraws Federal sponsorship under an award, pending corrective action by the recipient or pending a decision to terminate the award by the NHPRC. Suspension of an award is a separate action from suspension under NARA regulations implementing E.O. 12549 and E.O. 12689, ''Debarment and Suspension'' (36 CFR Part 1209).

(ll) *Termination* means the cancellation of NHPRC sponsorship, in whole or in part, under an agreement at any time prior to the date of completion.

(mm) *Third party in-kind contributions* means the value of non-cash contributions provided by non-Federal third parties. Third party in-kind contributions may be in the form of real property, equipment, supplies and other expendable property, and the value of goods and services directly benefiting and specifically identifiable to the project or program.

(nn) *Unliquidated obligations*, for financial reports prepared on a cash basis, means the amount of obligations incurred by the recipient that have not been paid. For reports prepared on an

accrued expenditure basis, they represent the amount of obligations incurred by the recipient for which an outlay has not been recorded.

(oo) *Unobligated balance* means the portion of the funds authorized by the NHPRC that has not been obligated by the recipient and is determined by deducting the cumulative obligations from the cumulative funds authorized.

(pp) *Unrecovered indirect cost* means the difference between the amount awarded and the amount which could have been awarded under the recipient's approved negotiated indirect cost rate.

(qq) *Working capital advance* means a procedure whereby funds are advanced to the recipient to cover its estimated disbursement needs for a given initial period.

§ 1210.3 Effect on other issuances.

For awards subject to this part, all administrative requirements of codified program regulations, program manuals, handbooks and other non-regulatory materials which are inconsistent with the requirements of this part shall be superseded, except to the extent they are required by statute, or authorized in accordance with the deviations provision in § 1210.4.

§ 1210.4 Deviations.

The Office of Management and Budget (OMB) may grant exceptions for classes of grants or recipients subject to the requirements of this part when exceptions are not prohibited by statute. However, in the interest of maximum uniformity, exceptions from the requirements of this part shall be permitted only in unusual circumstances. The NHPRC may apply more restrictive requirements to a class of recipients when approved by OMB. The NHPRC may apply less restrictive requirements when awarding small awards, except for those requirements which are statutory. Exceptions on a case-by-case basis may also be made by the NHPRC.

§ 1210.5 Subawards.

Unless sections of this part specifically exclude subrecipients from coverage, the provisions of this part shall be applied to subrecipients performing work under awards if such subrecipients are institutions of higher education, hospitals or other non-profit organizations. State and local government subrecipients are subject to the provisions of regulations implementing the grants management common rule, ''Uniform Administrative Requirements for Grants and Cooperative Agreements to State and Local Governments,'' published at 36 CFR part 1207.

Subpart B—Pre-Award Requirements

§ 1210.10 Purpose.

Sections 1210.11 through 1210.17 prescribes forms and instructions and other pre-award matters to be used in applying for NHPRC awards.

§ 1210.11 Pre-award policies.

(a) *Use of grants and cooperative agreements, and contracts.* In each instance, the NHPRC shall decide on the appropriate award instrument (i.e., grant, cooperative agreement, or contract). The Federal Grant and Cooperative Agreement Act (31 U.S.C. 6301–08) governs the use of grants, cooperative agreements and contracts. A grant or cooperative agreement shall be used only when the principal purpose of a transaction is to accomplish a public purpose of support or stimulation authorized by Federal statute. The statutory criterion for choosing between grants and cooperative agreements is that for the latter, ''substantial involvement is expected between the executive agency and the State, local government, or other recipient when carrying out the activity contemplated in the agreement.'' Contracts shall be used when the principal purpose is acquisition of property or services for the direct benefit or use of the Federal Government.

(b) *Public notice and priority setting.* The NHPRC shall notify the public of its intended funding priorities for discretionary grant programs.

§ 1210.12 Forms for applying for Federal assistance.

(a) The NHPRC shall comply with the applicable report clearance requirements of 5 CFR Part 1320, ''Controlling

Paperwork Burdens on the Public,'' with regard to all forms used by the NHPRC in place of or as a supplement to the Standard Form 424 (SF–424) series.

(b) Applicants shall use the SF–424 (Application for Federal Assistance) and NA Form 17001 (Budget Form) forms and instructions prescribed by the NHPRC Program Guidelines. OMB Control Number 3095–0004 has been assigned to the Budget Form. OMB Control Number 3095–0013 has been assigned to the NHPRC Program Guidelines.

(c) Applicants shall complete the appropriate sections of the SF–424 (Application for Federal Assistance) indicating whether the application was subject to review by the State Single Point of Contact (SPOC) under E.O. 12372, ''Intergovernmental Review of Federal Programs.'' The name and address of the SPOC for a particular State can be obtained from the NHPRC or the Catalog of Federal Domestic Assistance. The SPOC shall advise the applicant whether the program for which application is made has been selected by that State for review.

§ 1210.13 Debarment and suspension.

The NHPRC and recipients shall comply with the nonprocurement debarment and suspension common rule implementing E.O.s 12549 and 12689, ''Debarment and Suspension'' (36 CFR Part 1209). This common rule restricts subawards and contracts with certain parties that are debarred, suspended or otherwise excluded from or ineligible for participation in Federal assistance programs or activities.

§ 1210.14 Special award conditions.

If an applicant or recipient has a history of poor performance, is not financially stable, has a management system that does not meet the standards prescribed in this part, has not conformed to the terms and conditions of a previous award, or is not otherwise responsible, the NHPRC may impose additional requirements as needed, provided that such applicant or recipient is notified in writing as to: the nature of the additional requirements, the reason why the additional requirements are being imposed, the nature of the corrective action needed, the time allowed for completing the corrective actions, and the method for requesting reconsideration of the additional requirements imposed. Any special conditions shall be promptly removed once the conditions that prompted them have been corrected.

§ 1210.15 Metric system of measurement.

The Metric Conversion Act, as amended by the Omnibus Trade and Competitiveness Act (15 U.S.C. 205) declares that the metric system is the preferred measurement system for U.S. trade and commerce. The Act requires NARA to establish a date or dates in consultation with the Secretary of Commerce, when the metric system of measurement will be used in NARA's procurements, grants, and other business-related activities. Metric implementation may take longer where the use of the system is initially impractical or likely to cause significant inefficiencies in the accomplishment of federally-funded activities. NARA shall follow the provisions of E.O. 12770, ''Metric Usage in Federal Government Programs.''

§ 1210.16 Resource Conservation and Recovery Act.

Under the Resource Conservation and Recovery Act ((RCRA) (Pub. L. 94–580 codified at 42 U.S.C. 6962), any State agency or agency of a political subdivision of a State which is using appropriated Federal funds must comply with section 6002. Section 6002 requires that preference be given in procurement programs to the purchase of specific products containing recycled materials identified in guidelines developed by the Environmental Protection Agency (EPA) (40 CFR Parts 247 through 254). Accordingly, State and local institutions of higher education, hospitals, and non-profit organizations that receive direct Federal awards or other Federal funds shall give preference in their procurement programs funded with Federal funds to the purchase of recycled products pursuant to the EPA guidelines.

§ 1210.17 Certifications and representations.

Unless prohibited by statute or codified regulation, the NHPRC is authorized to allow recipients to submit certifications and representations required by statute, executive order, or regulation on an annual basis, if they have an ongoing and continuing relationship with the NHPRC. Annual certifications and representations shall be signed by responsible officials with the authority to ensure recipients' compliance with the pertinent requirements.

Subpart C—Post-Award Requirements

FINANCIAL AND PROGRAM MANAGEMENT

§ 1210.20 Purpose of financial and program management.

Sections 1210.21 through 1210.28 prescribe standards for financial management systems, methods for making payments and rules for: satisfying cost sharing and matching requirements, accounting for program income, budget revision approvals, making audits, determining allowability of cost, and establishing fund availability.

§ 1210.21 Standards for financial management systems.

(a) The NHPRC shall require recipients to relate financial data to performance data and develop unit cost information whenever practical.

(b) Recipients' financial management systems shall provide for the following.

(1) Accurate, current and complete disclosure of the financial results of each NHPRC-sponsored project or program in accordance with the reporting requirements set forth in § 1210.52.

(2) Records that identify adequately the source and application of funds for NHPRC-sponsored activities. These records shall contain information pertaining to NHPRC awards, authorizations, obligations, unobligated balances, assets, outlays, income and interest.

(3) Effective control over and accountability for all funds, property and other assets. Recipients shall adequately safeguard all such assets and assure they are used solely for authorized purposes.

(4) Comparison of outlays with budget amounts for each award. Whenever appropriate, financial information should be related to performance and unit cost data.

(5) Written procedures to minimize the time elapsing between the transfer of funds to the recipient from the U.S. Treasury and the issuance or redemption of checks, warrants or payments by other means for program purposes by the recipient. To the extent that the provisions of the Cash Management Improvement Act (CMIA) (Pub. L. 101–453) govern, payment methods of State agencies, instrumentalities, and fiscal agents shall be consistent with CMIA Treasury-State Agreements or the CMIA default procedures codified at 31 CFR Part 205, ''Withdrawal of Cash from the Treasury for Advances under Federal Grant and Other Programs.''

(6) Written procedures for determining the reasonableness, allocability and allowability of costs in accordance with the provisions of the applicable Federal cost principles and the terms and conditions of the award.

(7) Accounting records including cost accounting records that are supported by source documentation.

(c) Where the Federal Government guarantees or insures the repayment of money borrowed by the recipient, the NHPRC, at its discretion, may require adequate bonding and insurance if the bonding and insurance requirements of the recipient are not deemed adequate to protect the interest of the Federal Government.

(d) The NHPRC may require adequate fidelity bond coverage where the recipient lacks sufficient coverage to protect the Federal Government's interest.

(e) Where bonds are required in the situations described in this section, the bonds shall be obtained from companies holding certificates of authority as acceptable sureties, as prescribed in 31 CFR Part 223, ''Surety Companies Doing Business with the United States.''

§ 1210.22 Payment.

(a) Payment methods shall minimize the time elapsing between the transfer of funds from the United States Treasury and the issuance or redemption of

checks, warrants, or payment by other means by the recipients. Payment methods of State agencies or instrumentalities shall be consistent with Treasury-State CMIA agreements or default procedures codified at 31 CFR Part 205.

(b) Recipients will be paid in advance, provided they maintain or demonstrate the willingness to maintain written procedures that minimize the time elapsing between the transfer of funds and disbursement by the recipient, and financial management systems that meet the standards for fund control and accountability as established in §1210.21. Cash advances to a recipient organization shall be limited to the minimum amounts needed and be timed to be in accordance with the actual, immediate cash requirements of the recipient organization in carrying out the purpose of the approved program or project. The timing and amount of cash advances shall be as close as is administratively feasible to the actual disbursements by the recipient organization for direct program or project costs and the proportionate share of any allowable indirect costs.

(c) Whenever possible, advances shall be consolidated to cover anticipated cash needs for all awards made by the NHPRC to the recipient.

(1) Advance payment mechanisms include, but are not limited to, Treasury check and electronic funds transfer.

(2) Advance payment mechanisms are subject to 31 CFR Part 205.

(3) Recipients can submit requests for advances and reimbursements at least monthly when a predetermined schedule of electronic funds transfer is not used.

(d) Requests for Treasury check advance payment shall be submitted on SF–270, ''Request for Advance or Reimbursement,'' or other forms as may be authorized by OMB. This form is not to be used when Treasury check advance payments are made to the recipient automatically through the use of a predetermined payment schedule or if precluded by special NHPRC instructions for electronic funds transfer.

(e) Reimbursement is the preferred method when the requirements in paragraph (b) of this section cannot be met.

(1) When the reimbursement method is used, the NHPRC shall make payment within 30 days after receipt of the billing, unless the billing is improper.

(2) Recipients can submit a request for reimbursement at least monthly when a predetermined schedule of electronic funds transfer is not used.

(f) If a recipient cannot meet the criteria for advance payments and the NHPRC has determined that reimbursement is not feasible because the recipient lacks sufficient working capital, the NHPRC may provide cash on a working capital advance basis. Under this procedure, the NHPRC shall advance cash to the recipient to cover its estimated disbursement needs for an initial period generally geared to the awardee's disbursing cycle. Thereafter, the NHPRC shall reimburse the recipient for its actual cash disbursements. The working capital advance method of payment shall not be used for recipients unwilling or unable to provide timely advances to their subrecipient to meet the subrecipient's actual cash disbursements.

(g) To the extent available, recipients shall disburse funds available from repayments to and interest earned on a revolving fund, program income, rebates, refunds, contract settlements, audit recoveries and interest earned on such funds before requesting additional cash payments.

(h) Unless otherwise required by statute, the NHPRC shall not withhold payments for proper charges made by recipients at any time during the project period unless paragraph (h)(1) or (2) of this section apply.

(1) A recipient has failed to comply with the project objectives, the terms and conditions of the award, or NHPRC reporting requirements.

(2) The recipient or subrecipient is delinquent in a debt to the United States as defined in OMB Circular A–129, ''Managing Federal Credit Programs.'' Under such conditions, the NHPRC may, upon reasonable notice, inform the recipient that payments shall not be made for obligations incurred after a specified date until the conditions are corrected or the indebtedness to the Federal Government is liquidated.

(i) Standards governing the use of banks and other institutions as depositories of funds advanced under awards are as follows.

(1) Except for situations described in paragraph (i)(2) of this section, the NHPRC shall not require separate depository accounts for funds provided to a recipient or establish any eligibility requirements for depositories for funds provided to a recipient. However, recipients must be able to account for the receipt, obligation and expenditure of funds.

(2) Advances of NHPRC funds shall be deposited and maintained in insured accounts whenever possible.

(j) Consistent with the national goal of expanding the opportunities for women-owned and minority-owned business enterprises, recipients shall be encouraged to use women-owned and minority-owned banks (a bank which is owned at least 50 percent by women or minority group members).

(k) Recipients shall maintain advances of NHPRC funds in interest bearing accounts, unless paragraphs (k)(1), (2) or (3) of this section apply.

(1) The recipient receives less than $120,000 in Federal awards per year.

(2) The best reasonably available interest bearing account would not be expected to earn interest in excess of $250 per year on Federal cash balances.

(3) The depository would require an average or minimum balance so high that it would not be feasible within the expected Federal and non-Federal cash resources.

(l) In keeping with Electronic Funds Transfer rules (31 CFR Part 206), interest earned should be remitted annually to the Department of Health and Human Services (HHS) Payment Management System through an electronic medium such as the FEDWIRE Deposit system. Recipients which do not have this capability should use a check and mail it to the Payment Management System, P.O. Box 6021, Rockville, MD 20852. Interest amounts up to $250 per year may be retained by the recipient for administrative expense. State universities and hospitals shall comply with CMIA, as it pertains to interest. If an entity subject to CMIA uses its own funds to pay pre-award costs for discretionary awards without prior written approval from the NHPRC, it waives its right to recover the interest under CMIA.

(m) Except as noted elsewhere in this part, only the SF–270, Request for Advance or Reimbursement, shall be authorized for the recipients in requesting advances and reimbursements. The NHPRC requires an original and two copies of this form.

§ 1210.23 Cost sharing or matching.

(a) All contributions, including cash and third party in-kind, shall be accepted as part of the recipient's cost sharing or matching when such contributions meet all of the following criteria.

(1) Are verifiable from the recipient's records.

(2) Are not included as contributions for any other federally-assisted project or program.

(3) Are necessary and reasonable for proper and efficient accomplishment of project or program objectives.

(4) Are allowable under the applicable cost principles.

(5) Are not paid by the Federal Government under another award, except where authorized by Federal statute to be used for cost sharing or matching.

(6) Are provided for in the approved budget when required by the NHPRC.

(7) Conform to other provisions of this part, as applicable.

(b) Unrecovered indirect costs may be included as part of cost sharing or matching only with the prior approval of the NHPRC.

(c) Values for recipient contributions of services and property shall be established in accordance with the applicable cost principles. If the NHPRC authorizes recipients to donate buildings or land for construction/facilities acquisition projects or long-term use, the value of the donated property for cost sharing or matching shall be the lesser of paragraph (c)(1) or (2) of this section.

(1) The certified value of the remaining life of the property recorded in the recipient's accounting records at the time of donation.

(2) The current fair market value. However, when there is sufficient justification, the NHPRC may approve the use of the current fair market value of the donated property, even if it exceeds

the certified value at the time of donation to the project.

(d) Volunteer services furnished by professional and technical personnel, consultants, and other skilled and unskilled labor may be counted as cost sharing or matching if the service is an integral and necessary part of an approved project or program. Rates for volunteer services shall be consistent with those paid for similar work in the recipient's organization. In those instances in which the required skills are not found in the recipient organization, rates shall be consistent with those paid for similar work in the labor market in which the recipient competes for the kind of services involved. In either case, paid fringe benefits that are reasonable, allowable, and allocable may be included in the valuation.

(e) When an employer other than the recipient furnishes the services of an employee, these services shall be valued at the employee's regular rate of pay (plus an amount of fringe benefits that are reasonable, allowable, and allocable, but exclusive of overhead costs), provided these services are in the same skill for which the employee is normally paid.

(f) Donated supplies may include such items as expendable equipment, office supplies, laboratory supplies or workshop and classroom supplies. Value assessed to donated supplies included in the cost sharing or matching share shall be reasonable and shall not exceed the fair market value of the property at the time of the donation.

(g) The method used for determining cost sharing or matching for donated equipment, buildings and land for which title passes to the recipient may differ according to the purpose of the award, if paragraph (g)(1) or (2) of this section apply.

(1) If the purpose of the award is to assist the recipient in the acquisition of equipment, buildings or land, the total value of the donated property may be claimed as cost sharing or matching.

(2) If the purpose of the award is to support activities that require the use of equipment, buildings or land, normally only depreciation or use charges for equipment and buildings may be made. However, the full value of equipment or other capital assets and fair rental charges for land may be allowed, provided that the NHPRC has approved the charges.

(h) The value of donated property shall be determined in accordance with the usual accounting policies of the recipient, with the following qualifications.

(1) The value of donated land and buildings shall not exceed its fair market value at the time of donation to the recipient as established by an independent appraiser (e.g., certified real property appraiser or General Services Administration representative) and certified by a responsible official of the recipient.

(2) The value of donated equipment shall not exceed the fair market value of equipment of the same age and condition at the time of donation.

(3) The value of donated space shall not exceed the fair rental value of comparable space as established by an independent appraisal of comparable space and facilities in a privately-owned building in the same locality.

(4) The value of loaned equipment shall not exceed its fair rental value.

(5) The following requirements pertain to the recipient's supporting records for in-kind contributions from third parties.

(i) Volunteer services shall be documented and, to the extent feasible, supported by the same methods used by the recipient for its own employees.

(ii) The basis for determining the valuation for personal service, material, equipment, buildings and land shall be documented.

§ 1210.24 Program income.

(a) The NHPRC applies the standards set forth in this section in requiring recipient organizations to account for program income related to projects financed in whole or in part with Federal funds.

(b) Except as provided in paragraph (h) of this section, program income earned during the project period shall be retained by the recipient and, in accordance with these regulations or the terms and conditions of the award, shall be used in one or more of the ways listed in the following.

(1) Added to funds committed to the project by the NHPRC and recipient and used to further eligible project or program objectives.

(2) Used to finance the non-Federal share of the project or program.

(3) Deducted from the total project or program allowable cost in determining the net allowable costs on which the Federal share of costs is based.

(c) When the NHPRC authorizes the disposition of program income as described in paragraphs (b)(1) or (b)(2) of this section, program income in excess of any limits stipulated shall be used in accordance with paragraph (b)(3) of this section.

(d) In the event that the NHPRC does not specify in its regulations or the terms and conditions of the award how program income is to be used, paragraph (b)(3) of this section shall apply automatically to all projects or programs except research. For awards that support research, paragraph (b)(1) of this section shall apply automatically unless the NHPRC indicates in the terms and conditions another alternative on the award or the recipient is subject to special award conditions, as indicated in § 1210.14.

(e) Unless NHPRC regulations or the terms and conditions of the award provide otherwise, recipients shall have no obligation to the Federal Government regarding program income earned after the end of the project period.

(f) If authorized by NHPRC regulations or the terms and conditions of the award, costs incident to the generation of program income may be deducted from gross income to determine program income, provided these costs have not been charged to the award.

(g) Proceeds from the sale of property shall be handled in accordance with the requirements of the Property Standards (See §§ 1210.30 through 1210.37).

(h) Unless NHPRC regulations or the terms and condition of the award provide otherwise, recipients shall have no obligation to the Federal Government with respect to program income earned from license fees and royalties for copyrighted material, patents, patent applications, trademarks, and inventions produced under an award. However, Patent and Trademark Amendments (35 U.S.C. 18) apply to inventions made under an experimental, developmental, or research award.

§ 1210.25 Revision of budget and program plans.

(a) The budget plan is the financial expression of the project or program as approved during the award process. It may include either the Federal and non-Federal share, or only the Federal share, depending upon NHPRC requirements. It shall be related to performance for program evaluation purposes whenever appropriate.

(b) Recipients are required to report deviations from budget and program plans, and request prior approvals for budget and program plan revisions, in accordance with this section.

(c) Recipients shall request prior approvals from the NHPRC for one or more of the following program or budget related reasons.

(1) Change in the scope or the objective of the project or program (even if there is no associated budget revision requiring prior written approval).

(2) Change in a key person specified in the application or award document.

(3) The absence for more than three months, or a 25 percent reduction in time devoted to the project, by the approved project director or principal investigator.

(4) The need for additional NHPRC funding.

(5) The transfer of amounts budgeted for indirect costs to absorb increases in direct costs, or vice versa, if approval is required by the NHPRC.

(6) The inclusion, unless waived by the NHPRC, of costs that require prior approval in accordance with OMB Circular A–21, ''Cost Principles for Institutions of Higher Education,'' OMB Circular A–122, ''Cost Principles for Non-Profit Organizations,'' or 45 CFR Part 74 Appendix E, ''Principles for Determining Costs Applicable to Research and Development under Grants and Contracts with Hospitals,'' or 48 CFR Part 31, ''Contract Cost Principles and Procedures,'' as applicable.

(7) The transfer of funds allotted for training allowances (direct payment to trainees) to other categories of expense.

(8) Unless described in the application and funded in the approved

awards, the subaward, transfer or contracting out of any work under an award. This provision does not apply to the purchase of supplies, material, equipment or general support services.

(d) No other prior approval requirements for specific items will be imposed unless a deviation has been approved by OMB.

(e) Except for requirements listed in paragraphs (c)(1) and (c)(4) of this section, the NHPRC is authorized, at their option, to waive cost-related and administrative prior written approvals required by this Circular and OMB Circulars A–21 and A–122. Such waivers may include authorizing recipients to do any one or more of the following.

(1) Incur pre-award costs 90 calendar days prior to award or more than 90 calendar days with the prior approval of the NHPRC. All pre-award costs are incurred at the recipient's risk (i.e., the NHPRC is under no obligation to reimburse such costs if for any reason the recipient does not receive an award or if the award is less than anticipated and inadequate to cover such costs).

(2) Initiate a one-time extension of the expiration date of the award of up to 12 months unless one or more of the following conditions apply. For one-time extensions, the recipient must notify the NHPRC in writing with the supporting reasons and revised expiration date at least 10 days before the expiration date specified in the award. This one-time extension may not be exercised merely for the purpose of using unobligated balances.

(i) The terms and conditions of award prohibit the extension.

(ii) The extension requires additional NHPRC funds.

(iii) The extension involves any change in the approved objectives or scope of the project.

(3) Carry forward unobligated balances to subsequent funding periods.

(4) For awards that support research, unless the NHPRC provides otherwise in the award or in NHPRC's regulations, the prior approval requirements described in paragraph (e) of this section are automatically waived (i.e., recipients need not obtain such prior approvals) unless one of the conditions included in paragraph (e)(2) of this section applies.

(f) The NHPRC may, at its option, restrict the transfer of funds among direct cost categories or programs, functions and activities for awards in which the Federal share of the project exceeds $100,000 and the cumulative amount of such transfers exceeds or is expected to exceed 10 percent of the total budget as last approved by the NHPRC. The NHPRC shall not permit a transfer that would cause any Federal appropriation or part thereof to be used for purposes other than those consistent with the original intent of the appropriation.

(g) All other changes to nonconstruction budgets, except for the changes described in paragraph (j), do not require prior approval.

(h) [Reserved]

(i) No other prior approval requirements for specific items will be imposed unless a deviation has been approved by OMB.

(j) The NHPRC shall require recipients to notify the NHPRC in writing promptly whenever the amount of Federal authorized funds is expected to exceed the needs of the recipient for the project period by more than $5,000 or five percent of the NHPRC award, whichever is greater. This notification shall not be required if an application for additional funding is submitted for a continuation award.

(k) When requesting approval for budget revisions, recipients shall use the budget forms that were used in the application unless the NHPRC indicates a letter of request suffices.

(l) Within 30 calendar days from the date of receipt of the request for budget revisions, the NHPRC shall review the request and notify the recipient whether the budget revisions have been approved. If the revision is still under consideration at the end of 30 calendar days, the NHPRC shall inform the recipient in writing of the date when the recipient may expect the decision.

§ 1210.26 Non-Federal audits.

(a) Recipients and subrecipients that are institutions of higher education or other non-profit organizations (including hospitals) shall be subject to the audit requirements contained in the Single Audit Act Amendments of 1996 (31 U.S.C. 7501–7507) and revised OMB

Circular A–133, ''Audits of States, Local Governments, and Non-Profit Organizations.''

(b) State and local governments shall be subject to the audit requirements contained in the Single Audit Act Amendments of 1996 (31 U.S.C. 7501–7507) and revised OMB Circular A–133, ''Audits of States, Local Governments, and Non-Profit Organizations.''

(c) For-profit hospitals not covered by the audit provisions of revised OMB Circular A–133 shall be subject to the audit requirements of the Federal awarding agencies.

[62 FR 45939, 45943, Aug. 29, 1997]

§ 1210.27 Allowable costs.

For each kind of recipient, there is a set of Federal principles for determining allowable costs. Allowability of costs shall be determined in accordance with the cost principles applicable to the entity incurring the costs. Thus, allowability of costs incurred by State, local or federally-recognized Indian tribal governments is determined in accordance with the provisions of OMB Circular A–87, ''Cost Principles for State and Local Governments.'' The allowability of costs incurred by non-profit organizations is determined in accordance with the provisions of OMB Circular A–122, ''Cost Principles for Non-Profit Organizations.'' The allowability of costs incurred by institutions of higher education is determined in accordance with the provisions of OMB Circular A–21, ''Cost Principles for Educational Institutions.'' The allowability of costs incurred by hospitals is determined in accordance with the provisions of Appendix E of 45 CFR Part 74, ''Principles for Determining Costs Applicable to Research and Development Under Grants and Contracts with Hospitals.'' The allowability of costs incurred those non-profit organizations listed in Attachment C to Circular A–122 is determined in accordance with the provisions of the Federal Acquisition Regulation (FAR) at 48 CFR Part 31.

§ 1210.28 Period of availability of funds.

Where a funding period is specified, a recipient may charge to the grant only allowable costs resulting from obligations incurred during the funding period and any pre-award costs authorized by the NHPRC.

PROPERTY STANDARDS

§ 1210.30 Purpose of property standards.

Sections 1210.31 through 1210.37 set forth uniform standards governing management and disposition of property furnished by the Federal Government whose cost was charged to a project supported by an NHPRC award. The NHPRC requires recipients to observe these standards under awards and shall not impose additional requirements, unless specifically required by Federal statute. The recipient may use its own property management standards and procedures provided it observes the provisions of §§ 1210.31 through 1210.37.

§ 1210.31 Insurance coverage.

Recipients shall, at a minimum, provide the equivalent insurance coverage for real property and equipment acquired with NHPRC funds as provided to property owned by the recipient. Federally-owned property need not be insured unless required by the terms and conditions of the award.

§ 1210.32 Real property.

The NHPRC shall prescribe requirements for recipients concerning the use and disposition of real property acquired in whole or in part under awards. Unless otherwise provided by statute, such requirements, at a minimum, shall contain the following.

(a) Title to real property shall vest in the recipient subject to the condition that the recipient shall use the real property for the authorized purpose of the project as long as it is needed and shall not encumber the property without approval of the NHPRC.

(b) The recipient shall obtain written approval by the NHPRC for the use of real property in other federally-sponsored projects when the recipient determines that the property is no longer needed for the purpose of the original project. Use in other projects shall be limited to those under federally-sponsored projects (i.e., awards) or programs that have purposes consistent

with those authorized for support by the NHPRC.

(c) When the real property is no longer needed as provided in paragraphs (a) and (b) of this section, the recipient shall request disposition instructions from the NHPRC or its successor Federal awarding agency. The NHPRC shall observe one or more of the following disposition instructions.

(1) The recipient may be permitted to retain title without further obligation to the Federal Government after it compensates the Federal Government for that percentage of the current fair market value of the property attributable to the Federal participation in the project.

(2) The recipient may be directed to sell the property under guidelines provided by the NHPRC and pay the Federal Government for that percentage of the current fair market value of the property attributable to the Federal participation in the project (after deducting actual and reasonable selling and fix-up expenses, if any, from the sales proceeds). When the recipient is authorized or required to sell the property, proper sales procedures shall be established that provide for competition to the extent practicable and result in the highest possible return.

(3) The recipient may be directed to transfer title to the property to the Federal Government or to an eligible third party provided that, in such cases, the recipient shall be entitled to compensation for its attributable percentage of the current fair market value of the property.

§ 1210.33 Federally-owned and exempt property.

(a) Federally-owned property.

(1) Title to federally-owned property remains vested in the Federal Government. Recipients shall submit annually an inventory listing of federally-owned property in their custody to the NHPRC. Upon completion of the award or when the property is no longer needed, the recipient shall report the property to the NHPRC for further Federal agency utilization.

(2) If the NHPRC has no further need for the property, it shall be declared excess and reported to the General Services Administration. Appropriate instructions shall be issued to the recipient by the NHPRC.

(b) Exempt property. When statutory authority exists, the NHPRC has the option to vest title to property acquired with Federal funds in the recipient without further obligation to the Federal Government and under conditions the NHPRC considers appropriate. Such property is ''exempt property.'' Should the NHPRC not establish conditions, title to exempt property upon acquisition shall vest in the recipient without further obligation to the Federal Government.

§ 1210.34 Equipment.

(a) Title to equipment acquired by a recipient with NHPRC funds shall vest in the recipient, subject to conditions of this section.

(b) The recipient shall not use equipment acquired with NHPRC funds to provide services to non-Federal outside organizations for a fee that is less than private companies charge for equivalent services, unless specifically authorized by Federal statute, for as long as the Federal Government retains an interest in the equipment.

(c) The recipient shall use the equipment in the project or program for which it was acquired as long as needed, whether or not the project or program continues to be supported by Federal funds and shall not encumber the property without approval of the NHPRC. When no longer needed for the original project or program, the recipient shall use the equipment in connection with its other federally-sponsored activities, in the following order of priority:

(1) Activities sponsored by the NHPRC which funded the original project, then

(2) Activities sponsored by other Federal awarding agencies.

(d) During the time that equipment is used on the project or program for which it was acquired, the recipient shall make it available for use on other projects or programs if such other use will not interfere with the work on the project or program for which the equipment was originally acquired. First preference for such other use shall be given to other projects or programs sponsored by the NHPRC that financed

the equipment; second preference shall be given to projects or programs sponsored by other Federal awarding agencies. If the equipment is owned by the Federal Government, use on other activities not sponsored by the Federal Government shall be permissible if authorized by the NHPRC. User charges shall be treated as program income.

(e) When acquiring replacement equipment, the recipient may use the equipment to be replaced as trade-in or sell the equipment and use the proceeds to offset the costs of the replacement equipment subject to the approval of the NHPRC.

(f) The recipient's property management standards for equipment acquired with Federal funds and federally-owned equipment shall include all of the following.

(1) Equipment records shall be maintained accurately and shall include the following information.

(i) A description of the equipment.

(ii) Manufacturer's serial number, model number, Federal stock number, national stock number, or other identification number.

(iii) Source of the equipment, including the award number.

(iv) Whether title vests in the recipient or the Federal Government.

(v) Acquisition date (or date received, if the equipment was furnished by the Federal Government) and cost.

(vi) Information from which one can calculate the percentage of Federal participation in the cost of the equipment (not applicable to equipment furnished by the Federal Government).

(vii) Location and condition of the equipment and the date the information was reported.

(viii) Unit acquisition cost.

(ix) Ultimate disposition data, including date of disposal and sales price or the method used to determine current fair market value where a recipient compensates the NHPRC for its share.

(2) Equipment owned by the Federal Government shall be identified to indicate Federal ownership.

(3) A physical inventory of equipment shall be taken and the results reconciled with the equipment records at least once every two years. Any differences between quantities determined by the physical inspection and those shown in the accounting records shall be investigated to determine the causes of the difference. The recipient shall, in connection with the inventory, verify the existence, current utilization, and continued need for the equipment.

(4) A control system shall be in effect to insure adequate safeguards to prevent loss, damage, or theft of the equipment. Any loss, damage, or theft of equipment shall be investigated and fully documented; if the equipment was owned by the Federal Government, the recipient shall promptly notify the NHPRC.

(5) Adequate maintenance procedures shall be implemented to keep the equipment in good condition.

(6) Where the recipient is authorized or required to sell the equipment, proper sales procedures shall be established which provide for competition to the extent practicable and result in the highest possible return.

(g) When the recipient no longer needs the equipment, the equipment may be used for other activities in accordance with the following standards. For equipment with a current per unit fair market value of $5,000 or more, the recipient may retain the equipment for other uses provided that compensation is made to the NHPRC or its successor. The amount of compensation shall be computed by applying the percentage of Federal participation in the cost of the original project or program to the current fair market value of the equipment. If the recipient has no need for the equipment, the recipient shall request disposition instructions from the NHPRC. The NHPRC shall determine whether the equipment can be used to meet the NHPRC's requirements. If no requirement exists within the NHPRC, the availability of the equipment shall be reported to the General Services Administration by the NHPRC to determine whether a requirement for the equipment exists in other Federal agencies. The NHPRC shall issue instructions to the recipient no later than 120 calendar days after the recipient's request and the following procedures shall govern.

(1) If so instructed or if disposition instructions are not issued within 120

calendar days after the recipient's request, the recipient shall sell the equipment and reimburse the NHPRC an amount computed by applying to the sales proceeds the percentage of Federal participation in the cost of the original project or program. However, the recipient shall be permitted to deduct and retain from the Federal share $500 or ten percent of the proceeds, whichever is less, for the recipient's selling and handling expenses.

(2) If the recipient is instructed to ship the equipment elsewhere, the recipient shall be reimbursed by the Federal Government by an amount which is computed by applying the percentage of the recipient's participation in the cost of the original project or program to the current fair market value of the equipment, plus any reasonable shipping or interim storage costs incurred.

(3) If the recipient is instructed to otherwise dispose of the equipment, the recipient shall be reimbursed by the NHPRC for such costs incurred in its disposition.

(4) The NHPRC reserves the right to transfer the title to the Federal Government or to a third party named by the Federal Government when such third party is otherwise eligible under existing statutes. Such transfer shall be subject to the following standards.

(i) The equipment shall be appropriately identified in the award or otherwise made known to the recipient in writing.

(ii) The NHPRC shall issue disposition instructions within 120 calendar days after receipt of a final inventory. The final inventory shall list all equipment acquired with grant funds and federally-owned equipment. If the NHPRC fails to issue disposition instructions within the 120 calendar day period, the recipient shall apply the standards of this section, as appropriate.

(iii) When the NHPRC exercises its right to take title, the equipment shall be subject to the provisions for federally-owned equipment.

§ 1210.35 Supplies and other expendable property.

(a) Title to supplies and other expendable property shall vest in the recipient upon acquisition. If there is a residual inventory of unused supplies exceeding $5,000 in total aggregate value upon termination or completion of the project or program and the supplies are not needed for any other federally-sponsored project or program, the recipient shall retain the supplies for use on non-Federal sponsored activities or sell them, but shall, in either case, compensate the NHPRC for its share. The amount of compensation shall be computed in the same manner as for equipment.

(b) The recipient shall not use supplies acquired with NHPRC funds to provide services to non-Federal outside organizations for a fee that is less than private companies charge for equivalent services, unless specifically authorized by Federal statute as long as the Federal Government retains an interest in the supplies.

§ 1210.36 Intangible property.

(a) The recipient may copyright any work that is subject to copyright and was developed, or for which ownership was purchased, under an award. The NHPRC reserves a royalty-free, nonexclusive and irrevocable right to reproduce, publish, or otherwise use the work for Federal purposes, and to authorize others to do so.

(b) Recipients are subject to applicable regulations governing patents and inventions, including government-wide regulations issued by the Department of Commerce at 37 CFR Part 401, ''Rights to Inventions Made by Nonprofit Organizations and Small Business Firms Under Government Grants, Contracts and Cooperative Agreements.''

(c) The Federal Government has the right to:

(1) Obtain, reproduce, publish or otherwise use the data first produced under an award; and

(2) Authorize others to receive, reproduce, publish, or otherwise use such data for Federal purposes.

(d) (1) In addition, in response to a Freedom of Information Act (FOIA) request for research data relating to published research findings produced under an award that were used by the Federal Government in developing an agency action that has the force and effect of

law, the NHPRC shall request, and the recipient shall provide, within a reasonable time, the research data so that they can be made available to the public through the procedures established under the FOIA. If the NHPRC obtains the research data solely in response to a FOIA request, the agency may charge the requester a reasonable fee equaling the full incremental cost of obtaining the research data. This fee should reflect costs incurred by the agency, the recipient, and applicable subrecipients. This fee is in addition to any fees the agency may assess under the FOIA (5 U.S.C. 552(a)(4)(A)).

(2) The following definitions apply for purposes of this paragraph (d):

(i) *Research data* is defined as the recorded factual material commonly accepted in the scientific community as necessary to validate research findings, but not any of the following: preliminary analyses, drafts of scientific papers, plans for future research, peer reviews, or communications with colleagues. This ''recorded'' material excludes physical objects (e.g., laboratory samples). *Research data* also do not include:

(A) Trade secrets, commercial information, materials necessary to be held confidential by a researcher until they are published, or similar information which is protected under law; and

(B) Personnel and medical information and similar information the disclosure of which would constitute a clearly unwarranted invasion of personal privacy, such as information that could be used to identify a particular person in a research study.

(ii) *Published* is defined as either when:

(A) Research findings are published in a peer-reviewed scientific or technical journal; or

(B) A Federal agency publicly and officially cites the research findings in support of an agency action that has the force and effect of law.

(iii) *Used by the Federal Government in developing an agency action that has the force and effect of law* is defined as when an agency publicly and officially cites the research findings in support of an agency action that has the force and effect of law.

(e) Title to intangible property and debt instruments acquired under an award or subaward vests upon acquisition in the recipient. The recipient shall use that property for the originally-authorized purpose, and the recipient shall not encumber the property without approval of the NHPRC. When no longer needed for the originally authorized purpose, disposition of the intangible property shall occur in accordance with the provisions of § 1210.34(g).

[60 FR 53515, Oct. 16, 1995, as amended at 65 FR 14407, 14417, Mar. 16, 2000]

§ 1210.37 Property trust relationship.

Real property, equipment, intangible property and debt instruments that are acquired or improved with NHPRC funds shall be held in trust by the recipient as trustee for the beneficiaries of the project or program under which the property was acquired or improved. The NHPRC may require recipients to record liens or other appropriate notices of record to indicate that personal or real property has been acquired or improved with Federal funds and that use and disposition conditions apply to the property.

PROCUREMENT STANDARDS

§ 1210.40 Purpose of procurement standards.

Sections 1210.41 through 1210.48 set forth standards for use by recipients in establishing procedures for the procurement of supplies and other expendable property, equipment, real property and other services with NHPRC funds. These standards are furnished to ensure that such materials and services are obtained in an effective manner and in compliance with the provisions of applicable Federal statutes and executive orders. No additional procurement standards or requirements shall be imposed by the NHPRC upon recipients, unless specifically required by Federal statute or executive order or approved by OMB.

§ 1210.41 Recipient responsibilities.

The standards contained in this section do not relieve the recipient of the contractual responsibilities arising under its contract(s). The recipient is

the responsible authority, without recourse to the NHPRC, regarding the settlement and satisfaction of all contractual and administrative issues arising out of procurements entered into in support of an award or other agreement. This includes disputes, claims, protests of award, source evaluation or other matters of a contractual nature. Matters concerning violation of statute are to be referred to such Federal, State or local authority as may have proper jurisdiction.

§ 1210.42 Codes of conduct.

The recipient shall maintain written standards of conduct governing the performance of its employees engaged in the award and administration of contracts. No employee, officer, or agent shall participate in the selection, award, or administration of a contract supported by Federal funds if a real or apparent conflict of interest would be involved. Such a conflict would arise when the employee, officer, or agent, any member of his or her immediate family, his or her partner, or an organization which employs or is about to employ any of the parties indicated herein, has a financial or other interest in the firm selected for an award. The officers, employees, and agents of the recipient shall neither solicit nor accept gratuities, favors, or anything of monetary value from contractors, or parties to subagreements. However, recipients may set standards for situations in which the financial interest is not substantial or the gift is an unsolicited item of nominal value. The standards of conduct shall provide for disciplinary actions to be applied for violations of such standards by officers, employees, or agents of the recipient.

§ 1210.43 Competition.

All procurement transactions shall be conducted in a manner to provide, to the maximum extent practical, open and free competition. The recipient shall be alert to organizational conflicts of interest as well as noncompetitive practices among contractors that may restrict or eliminate competition or otherwise restrain trade. In order to ensure objective contractor performance and eliminate unfair competitive advantage, contractors that develop or draft specifications, requirements, statements of work, invitations for bids and/or requests for proposals shall be excluded from competing for such procurements. Awards shall be made to the bidder or offeror whose bid or offer is responsive to the solicitation and is most advantageous to the recipient, price, quality and other factors considered. Solicitations shall clearly set forth all requirements that the bidder or offeror shall fulfill in order for the bid or offer to be evaluated by the recipient. Any and all bids or offers may be rejected when it is in the recipient's interest to do so.

§ 1210.44 Procurement procedures.

(a) All recipients shall establish written procurement procedures. These procedures shall provide for, at a minimum, that paragraphs (a) (1), (2) and (3) of this section apply.

(1) Recipients avoid purchasing unnecessary items.

(2) Where appropriate, an analysis is made of lease and purchase alternatives to determine which would be the most economical and practical procurement for the Federal Government.

(3) Solicitations for goods and services provide for all of the following.

(i) A clear and accurate description of the technical requirements for the material, product or service to be procured. In competitive procurements, such a description shall not contain features which unduly restrict competition.

(ii) Requirements which the bidder/offeror must fulfill and all other factors to be used in evaluating bids or proposals.

(iii) A description, whenever practicable, of technical requirements in terms of functions to be performed or performance required, including the range of acceptable characteristics or minimum acceptable standards.

(iv) The specific features of ''brand name or equal'' descriptions that bidders are required to meet when such items are included in the solicitation.

(v) The acceptance, to the extent practicable and economically feasible, of products and services dimensioned in the metric system of measurement.

(vi) Preference, to the extent practicable and economically feasible, for products and services that conserve natural resources and protect the environment and are energy efficient.

(b) Positive efforts shall be made by recipients to utilize small businesses, minority-owned firms, and women's business enterprises, whenever possible. Recipients of Federal awards shall take all of the following steps to further this goal.

(1) Ensure that small businesses, minority-owned firms, and women's business enterprises are used to the fullest extent practicable.

(2) Make information on forthcoming opportunities available and arrange time frames for purchases and contracts to encourage and facilitate participation by small businesses, minority-owned firms, and women's business enterprises.

(3) Consider in the contract process whether firms competing for larger contracts intend to subcontract with small businesses, minority-owned firms, and women's business enterprises.

(4) Encourage contracting with consortiums of small businesses, minority-owned firms and women's business enterprises when a contract is too large for one of these firms to handle individually.

(5) Use the services and assistance, as appropriate, of such organizations as the Small Business Administration and the Department of Commerce's Minority Business Development Agency in the solicitation and utilization of small businesses, minority-owned firms and women's business enterprises.

(c) The type of procuring instruments used (e.g., fixed price contracts, cost reimbursable contracts, purchase orders, and incentive contracts) shall be determined by the recipient but shall be appropriate for the particular procurement and for promoting the best interest of the program or project involved. The ''cost-plus-a-percentage-of-cost'' or ''percentage of construction cost'' methods of contracting shall not be used.

(d) Contracts shall be made only with responsible contractors who possess the potential ability to perform successfully under the terms and conditions of the proposed procurement. Consideration shall be given to such matters as contractor integrity, record of past performance, financial and technical resources or accessibility to other necessary resources. In certain circumstances, contracts with certain parties are restricted by NARA implementation of E.O.s 12549 and 12689, ''Debarment and Suspension'' (36 CFR Part 1209).

(e) Recipients shall, on request, make available for the NHPRC, pre-award review and procurement documents, such as request for proposals or invitations for bids, independent cost estimates, etc., when any of the following conditions apply.

(1) A recipient's procurement procedures or operation fails to comply with the procurement standards in the NHPRC's implementation of this part.

(2) The procurement is expected to exceed the small purchase threshold fixed at 41 U.S.C. 403 (11) (currently $25,000) and is to be awarded without competition or only one bid or offer is received in response to a solicitation.

(3) The procurement, which is expected to exceed the small purchase threshold, specifies a ''brand name'' product.

(4) The proposed award over the small purchase threshold is to be awarded to other than the apparent low bidder under a sealed bid procurement.

(5) A proposed contract modification changes the scope of a contract or increases the contract amount by more than the amount of the small purchase threshold.

§ 1210.45 Cost and price analysis.

Some form of cost or price analysis shall be made and documented in the procurement files in connection with every procurement action. Price analysis may be accomplished in various ways, including the comparison of price quotations submitted, market prices and similar indicia, together with discounts. Cost analysis is the review and evaluation of each element of cost to determine reasonableness, allocability and allowability.

§ 1210.46 Procurement records.

Procurement records and files for purchases in excess of the small purchase threshold shall include the following at a minimum:

(a) Basis for contractor selection,

(b) Justification for lack of competition when competitive bids or offers are not obtained, and

(c) Basis for award cost or price.

§ 1210.47 Contract administration.

A system for contract administration shall be maintained to ensure contractor conformance with the terms, conditions and specifications of the contract and to ensure adequate and timely follow up of all purchases. Recipients shall evaluate contractor performance and document, as appropriate, whether contractors have met the terms, conditions and specifications of the contract.

§ 1210.48 Contract provisions.

The recipient shall include, in addition to provisions to define a sound and complete agreement, the following provisions in all contracts. The following provisions shall also be applied to subcontracts.

(a) Contracts in excess of the small purchase threshold shall contain contractual provisions or conditions that allow for administrative, contractual, or legal remedies in instances in which a contractor violates or breaches the contract terms, and provide for such remedial actions as may be appropriate.

(b) All contracts in excess of the small purchase threshold shall contain suitable provisions for termination by the recipient, including the manner by which termination shall be effected and the basis for settlement. In addition, such contracts shall describe conditions under which the contract may be terminated for default as well as conditions where the contract may be terminated because of circumstances beyond the control of the contractor.

(c) All negotiated contracts (except those for less than the small purchase threshold) awarded by recipients shall include a provision to the effect that the recipient, the NHPRC, the Comptroller General of the United States, or any of their duly authorized representatives, shall have access to any books, documents, papers and records of the contractor which are directly pertinent to a specific program for the purpose of making audits, examinations, excerpts and transcriptions.

(d) All contracts, including small purchases, awarded by recipients and their contractors shall contain the procurement provisions of Appendix A to this Part, as applicable.

REPORTS AND RECORDS

§ 1210.50 Purpose of reports and records.

Sections 1210.51 through 1210.53 set forth the procedures for monitoring and reporting on the recipient's financial and program performance and the necessary standard reporting forms. They also set forth record retention requirements.

§ 1210.51 Monitoring and reporting program performance.

(a) Recipients are responsible for managing and monitoring each project, program, subaward, function or activity supported by the award. Recipients shall monitor subawards to ensure subrecipients have met the audit requirements as delineated in § 1210.26.

(b) Except as provided in paragraph (f) of this section, interim performance reports shall be submitted every six months and shall be due 30 days after the reporting period; final reports shall be due 90 calendar days after the end of the grant period.

(c) If inappropriate, a final performance report shall not be required after completion of the project.

(d) When required, performance reports shall generally contain, for each award, brief information on each of the following.

(1) A comparison of actual accomplishments with the goals and objectives established for the period, the findings of the investigator, or both. Whenever appropriate and the output of programs or projects can be readily quantified, such quantitative data should be related to cost data for computation of unit costs.

(2) Reasons why established goals were not met, if appropriate.

(3) Other pertinent information including, when appropriate, analysis and explanation of cost overruns or high unit costs.

(e) Recipients shall not be required to submit more than the original and two copies of performance reports.

(f) Recipients shall immediately notify the NHPRC of developments that have a significant impact on the award-supported activities. Also, notification shall be given in the case of problems, delays, or adverse conditions which materially impair the ability to meet the objectives of the award. This notification shall include a statement of the action taken or contemplated, and any assistance needed to resolve the situation.

(g) The NHPRC may make site visits, as needed.

(h) The NHPRC shall comply with clearance requirements of 5 CFR Part 1320 when requesting performance data from recipients.

§ 1210.52 Financial reporting.

(a) The following forms or such other forms as may be approved by OMB are authorized for obtaining financial information from recipients.

(1) SF–269 or SF–269A, Financial Status Report.

(i) The NHPRC requires recipients to use the SF–269 or SF–269A to report the status of funds for all nonconstruction projects or programs. The NHPRC may, however, have the option of not requiring the SF–269 or SF–269A when the SF–270, Request for Advance or Reimbursement, or SF–272, Report of Federal Cash Transactions, is determined to provide adequate information to meet its needs, except that a final SF–269 or SF–269A shall be required at the completion of the project when the SF–270 is used only for advances.

(ii) The report may be on a cash or accrual basis.

(iii) The NHPRC shall determine the frequency of the Financial Status Report for each project or program, considering the size and complexity of the particular project or program. However, the report shall not be required more frequently than quarterly or less frequently than annually. A final report shall be required at the completion of the agreement.

(iv) The NHPRC shall require recipients to submit the SF–269 or SF–269A (an original and no more than two copies) no later than 30 days after the end of each specified reporting period for quarterly and semi-annual reports, and 90 calendar days for annual and final reports. Extensions of reporting due dates may be approved by NHPRC upon request of the recipient.

(2) SF–272, Report of Federal Cash Transactions.

(i) When funds are advanced to recipients the NHPRC shall require each recipient to submit the SF–272 and, when necessary, its continuation sheet, SF–272a. The NHPRC shall use this report to monitor cash advanced to recipients and to obtain disbursement information for each agreement with the recipients.

(ii) The NHPRC may require forecasts of Federal cash requirements in the ''Remarks'' section of the report.

(iii) When practical and deemed necessary, the NHPRC may require recipients to report in the ''Remarks'' section the amount of cash advances received in excess of three days. Recipients shall provide short narrative explanations of actions taken to reduce the excess balances.

(iv) Recipients shall be required to submit not more than the original and two copies of the SF–272 15 calendar days following the end of each quarter. The NHPRC may require a monthly report from those recipients receiving advances totaling $1 million or more per year.

(v) The NHPRC may waive the requirement for submission of the SF–272 for any one of the following reasons:

(A) When monthly advances do not exceed $25,000 per recipient, provided that such advances are monitored through other forms contained in this section;

(B) If, in the NHPRC's opinion, the recipient's accounting controls are adequate to minimize excessive Federal advances; or,

(C) When the electronic payment mechanisms provide adequate data.

(b) When the NHPRC needs additional information or more frequent reports, the following shall be observed.

(1) When additional information is needed to comply with legislative requirements, the NHPRC shall issue instructions to require recipients to submit such information under the ''Remarks'' section of the reports.

(2) When the NHPRC determines that a recipient's accounting system does not meet the standards in § 1210.21, additional pertinent information to further monitor awards may be obtained upon written notice to the recipient until such time as the system is brought up to standard. The NHPRC, in obtaining this information, shall comply with report clearance requirements of 5 CFR Part 1320.

(3) The NHPRC is encouraged to shade out any line item on any report if not necessary.

(4) The NHPRC may accept the identical information from the recipients in machine readable format or computer printouts or electronic outputs in lieu of prescribed formats.

(5) The NHPRC may provide computer or electronic outputs to recipients when such expedites or contributes to the accuracy of reporting.

§ 1210.53 Retention and access requirements for records.

(a) This section sets forth requirements for record retention and access to records for awards to recipients. The NHPRC will not impose any other record retention or access requirements upon recipients.

(b) Financial records, supporting documents, statistical records, and all other records pertinent to an award shall be retained for a period of three years from the date of submission of the final expenditure report or, for awards that are renewed quarterly or annually, from the date of the submission of the quarterly or annual financial report, as authorized by the NHPRC. The only exceptions are the following.

(1) If any litigation, claim, or audit is started before the expiration of the 3-year period, the records shall be retained until all litigation, claims or audit findings involving the records have been resolved and final action taken.

(2) Records for real property and equipment acquired with NHPRC funds shall be retained for 3 years after final disposition.

(3) When records are transferred to or maintained by the NHPRC, the 3-year retention requirement is not applicable to the recipient.

(4) Indirect cost rate proposals, cost allocations plans, etc. as specified in paragraph (g) of this section.

(c) Copies of original records may be substituted for the original records if authorized by the NHPRC.

(d) The NHPRC shall request transfer of certain records to its custody from recipients when it determines that the records possess long term retention value. However, in order to avoid duplicate recordkeeping, the NHPRC may make arrangements for recipients to retain any records that are continuously needed for joint use.

(e) The NHPRC, the Inspector General, Comptroller General of the United States, or any of their duly authorized representatives, have the right of timely and unrestricted access to any books, documents, papers, or other records of recipients that are pertinent to the awards, in order to make audits, examinations, excerpts, transcripts and copies of such documents. This right also includes timely and reasonable access to a recipient's personnel for the purpose of interview and discussion related to such documents. The rights of access in this paragraph are not limited to the required retention period, but shall last as long as records are retained.

(f) Unless required by statute, the NHPRC will place no restrictions on recipients that limit public access to the records of recipients that are pertinent to an award, except when the NHPRC can demonstrate that such records shall be kept confidential and would have been exempted from disclosure pursuant to the Freedom of Information Act (5 U.S.C. 552) if the records had belonged to the NHPRC.

(g) Indirect cost rate proposals, cost allocations plans, etc. Paragraphs (g)(1) and (g)(2) of this section apply to the following types of documents, and their supporting records: indirect cost rate computations or proposals, cost allocation plans, and any similar accounting computations of the rate at which a particular group of costs is chargeable

(such as computer usage chargeback rates or composite fringe benefit rates).

(1) If submitted for negotiation. If the recipient submits to the cognizant Federal agency or the subrecipient submits to the recipient the proposal, plan, or other computation to form the basis for negotiation of the rate, then the 3-year retention period for its supporting records starts on the date of such submission.

(2) If not submitted for negotiation. If the recipient is not required to submit to the NHPRC or the subrecipient is not required to submit to the recipient the proposal, plan, or other computation for negotiation purposes, then the 3-year retention period for the proposal, plan, or other computation and its supporting records starts at the end of the fiscal year (or other accounting period) covered by the proposal, plan, or other computation.

TERMINATION AND ENFORCEMENT

§ 1210.60 Purpose of termination and enforcement.

Sections 1210.61 and 1210.62 set forth uniform suspension, termination and enforcement procedures.

§ 1210.61 Termination.

(a) Awards may be terminated in whole or in part only if paragraphs (1), (2) or (3) of this section apply.

(1) By the NHPRC, if a recipient materially fails to comply with the terms and conditions of an award.

(2) By the NHPRC with the consent of the recipient, in which case the two parties shall agree upon the termination conditions, including the effective date and, in the case of partial termination, the portion to be terminated.

(3) By the recipient upon sending to the NHPRC written notification setting forth the reasons for such termination, the effective date, and, in the case of partial termination, the portion to be terminated. However, if the NHPRC determines in the case of partial termination that the reduced or modified portion of the grant will not accomplish the purposes for which the grant was made, it may terminate the grant in its entirety under either paragraphs (a)(1) or (2) of this section.

(b) If costs are allowed under an award, the responsibilities of the recipient referred to in § 1210.71(a), including those for property management as applicable, shall be considered in the termination of the award, and provision shall be made for continuing responsibilities of the recipient after termination, as appropriate.

§ 1210.62 Enforcement.

(a) Remedies for noncompliance. If a recipient materially fails to comply with the terms and conditions of an award, whether stated in a Federal statute, regulation, assurance, application, or notice of award, the NHPRC may, in addition to imposing any of the special conditions outlined in § 1210.14, take one or more of the following actions, as appropriate in the circumstances.

(1) Temporarily withhold cash payments pending correction of the deficiency by the recipient or more severe enforcement action by the NHPRC.

(2) Disallow (that is, deny both use of funds and any applicable matching credit for) all or part of the cost of the activity or action not in compliance.

(3) Wholly or partly suspend or terminate the current award.

(4) Withhold further awards for the project or program.

(5) Take other remedies that may be legally available.

(b) Hearings and appeals. In taking an enforcement action, the NHPRC shall provide the recipient an opportunity for hearing, appeal, or other administrative proceeding to which the recipient is entitled under any statute or regulation applicable to the action involved.

(c) Effects of suspension and termination. Costs of a recipient resulting from obligations incurred by the recipient during a suspension or after termination of an award are not allowable unless the NHPRC expressly authorizes them in the notice of suspension or termination or subsequently. Other recipient costs during suspension or after termination which are necessary and not reasonably avoidable are allowable if paragraphs (c)(1) and (2) of this section apply.

(1) The costs result from obligations which were properly incurred by the recipient before the effective date of suspension or termination, are not in anticipation of it, and in the case of a termination, are noncancellable.

(2) The costs would be allowable if the award were not suspended or expired normally at the end of the funding period in which the termination takes effect.

(d) Relationship to debarment and suspension. The enforcement remedies identified in this section, including suspension and termination, do not preclude a recipient from being subject to debarment and suspension under E.O.s 12549 and 12689 and NARA implementing regulations (see § 1210.13).

Subpart D—After-the-Award Requirements

§ 1210.70 Purpose.

Sections 1210.71 through 1210.73 contain closeout procedures and other procedures for subsequent disallowances and adjustments.

§ 1210.71 Closeout procedures.

(a) Recipients shall submit, within 90 calendar days after the date of completion of the award, all financial, performance, and other reports as required by the terms and conditions of the award. The NHPRC may approve extensions when requested by the recipient.

(b) Unless the NHPRC authorizes an extension, a recipient shall liquidate all obligations incurred under the award not later than 90 calendar days after the funding period or the date of completion as specified in the terms and conditions of the award or in agency implementing instructions.

(c) The NHPRC shall make prompt payments to a recipient for allowable reimbursable costs under the award being closed out.

(d) The recipient shall promptly refund any balances of unobligated cash that the NHPRC has advanced or paid and that is not authorized to be retained by the recipient for use in other projects. OMB Circular A–129 governs unreturned amounts that become delinquent debts.

(e) When authorized by the terms and conditions of the award, the NHPRC shall make a settlement for any upward or downward adjustments to the Federal share of costs after closeout reports are received.

(f) The recipient shall account for any real and personal property acquired with Federal funds or received from the Federal Government in accordance with §§ 1210.31 through 1210.37.

(g) In the event a final audit has not been performed prior to the closeout of an award, the NHPRC shall retain the right to recover an appropriate amount after fully considering the recommendations on disallowed costs resulting from the final audit.

§ 1210.72 Subsequent adjustments and continuing responsibilities.

(a) The closeout of an award does not affect any of the following.

(1) The right of the NHPRC to disallow costs and recover funds on the basis of a later audit or other review.

(2) The obligation of the recipient to return any funds due as a result of later refunds, corrections, or other transactions.

(3) Audit requirements in § 1210.26.

(4) Property management requirements in §§ 1210.31 through 1210.37.

(5) Records retention as required in § 1210.53.

(b) After closeout of an award, a relationship created under an award may be modified or ended in whole or in part with the consent of the NHPRC and the recipient, provided the responsibilities of the recipient referred to in § 1210.73(a), including those for property management as applicable, are considered and provisions made for continuing responsibilities of the recipient, as appropriate.

§ 1210.73 Collection of amounts due.

(a) Any funds paid to a recipient in excess of the amount to which the recipient is finally determined to be entitled under the terms and conditions of the award constitute a debt to the Federal Government. If not paid within a reasonable period after the demand for payment, the NHPRC may reduce the debt by:

(1) Making an administrative offset against other requests for reimbursements;

(2) Withholding advance payments otherwise due to the recipient; or

(3) Taking other action permitted by statute.

(b) Except as otherwise provided by law, the NHPRC shall charge interest on an overdue debt in accordance with 4 CFR Chapter II, ''Federal Claims Collection Standards.''

APPENDIX A TO PART 1210—CONTRACT PROVISIONS

All contracts, awarded by a recipient including small purchases, shall contain the following provisions as applicable:

1. Equal Employment Opportunity—All contracts shall contain a provision requiring compliance with E.O. 11246, ''Equal Employment Opportunity,'' as amended by E.O. 11375, ''Amending Executive Order 11246 Relating to Equal Employment Opportunity,'' and as supplemented by regulations at 41 CFR part 60, ''Office of Federal Contract Compliance Programs, Equal Employment Opportunity, Department of Labor.''

2. Copeland ''Anti-Kickback'' Act (18 U.S.C. 874 and 40 U.S.C. 276c)—All contracts and subgrants in excess of $2,000 for construction or repair awarded by recipients and subrecipients shall include a provision for compliance with the Copeland ''Anti-Kickback'' Act (18 U.S.C. 874), as supplemented by Department of Labor regulations (29 CFR part 3, ''Contractors and Subcontractors on Public Building or Public Work Financed in Whole or in Part by Loans or Grants from the United States''). The Act provides that each contractor or subrecipient shall be prohibited from inducing, by any means, any person employed in the construction, completion, or repair of public work, to give up any part of the compensation to which he is otherwise entitled. The recipient shall report all suspected or reported violations to the Federal awarding agency.

3. Davis-Bacon Act, as amended (40 U.S.C. 276a to a–7)—When required by Federal program legislation, all construction contracts awarded by the recipients and subrecipients of more than $2,000 shall include a provision for compliance with the Davis-Bacon Act (40 U.S.C. 276a to a–7) and as supplemented by Department of Labor regulations (29 CFR part 5, ''Labor Standards Provisions Applicable to Contracts Governing Federally Financed and Assisted Construction''). Under this Act, contractors shall be required to pay wages to laborers and mechanics at a rate not less than the minimum wages specified in a wage determination made by the Secretary of Labor. In addition, contractors shall be required to pay wages not less than once a week. The recipient shall place a copy of the current prevailing wage determination issued by the Department of Labor in each solicitation and the award of a contract shall be conditioned upon the acceptance of the wage determination. The recipient shall report all suspected or reported violations to the Federal awarding agency.

4. Contract Work Hours and Safety Standards Act (40 U.S.C. 327–333)—Where applicable, all contracts awarded by recipients in excess of $2,000 for construction contracts and in excess of $2,500 for other contracts that involve the employment of mechanics or laborers shall include a provision for compliance with Sections 102 and 107 of the Contract Work Hours and Safety Standards Act (40 U.S.C. 327–333), as supplemented by Department of Labor regulations (29 CFR part 5). Under Section 102 of the Act, each contractor shall be required to compute the wages of every mechanic and laborer on the basis of a standard work week of 40 hours. Work in excess of the standard work week is permissible provided that the worker is compensated at a rate of not less than 1½ times the basic rate of pay for all hours worked in excess of 40 hours in the work week. Section 107 of the Act is applicable to construction work and provides that no laborer or mechanic shall be required to work in surroundings or under working conditions which are unsanitary, hazardous or dangerous. These requirements do not apply to the purchases of supplies or materials or articles ordinarily available on the open market, or contracts for transportation or transmission of intelligence.

5. Rights to Inventions Made Under a Contract or Agreement—Contracts or agreements for the performance of experimental, developmental, or research work shall provide for the rights of the Federal Government and the recipient in any resulting invention in accordance with 37 CFR part 401, ''Rights to Inventions Made by Nonprofit Organizations and Small Business Firms Under Government Grants, Contracts and Cooperative Agreements,'' and any implementing regulations issued by the awarding agency.

6. Clean Air Act (42 U.S.C. 7401 *et seq.*) and the Federal Water Pollution Control Act (33 U.S.C. 1251 *et seq.*), as amended—Contracts and subgrants of amounts in excess of $100,000 shall contain a provision that requires the recipient to agree to comply with all applicable standards, orders or regulations issued pursuant to the Clean Air Act (42 U.S.C. 7401 *et seq.*) and the Federal Water Pollution Control Act as amended (33 U.S.C. 1251 *et seq.*). Violations shall be reported to the Federal awarding agency and the Regional Office of the Environmental Protection Agency (EPA).

7. Byrd Anti-Lobbying Amendment (31 U.S.C. 1352)—Contractors who apply or bid for an award of $100,000 or more shall file the required certification. Each tier certifies to the tier above that it will not and has not used Federal appropriated funds to pay any

person or organization for influencing or attempting to influence an officer or employee of any agency, a member of Congress, officer or employee of Congress, or an employee of a member of Congress in connection with obtaining any Federal contract, grant or any other award covered by 31 U.S.C. 1352. Each tier shall also disclose any lobbying with non-Federal funds that takes place in connection with obtaining any Federal award. Such disclosures are forwarded from tier to tier up to the recipient.

8. Debarment and Suspension (E.O. 12549 and E.O. 12689)—No contract shall be made to parties listed on the General Services Administration's List of Parties Excluded from Federal Procurement or Nonprocurement Programs in accordance with E.O. 12549 and E.O. 12689, ''Debarment and Suspension.'' This list contains the names of parties debarred, suspended, or otherwise excluded by agencies, and contractors declared ineligible under statutory or regulatory authority other than E.O. 12549. Contractors with awards that exceed the small purchase threshold shall provide the required certification regarding its exclusion status and that of its principal employees.

PART 1211—NONDISCRIMINATION ON THE BASIS OF SEX IN EDUCATION PROGRAMS OR ACTIVITIES RECEIVING FEDERAL FINANCIAL ASSISTANCE

Subpart A—Introduction

Sec.
1211.100 Purpose and effective date.
1211.105 Definitions.
1211.110 Remedial and affirmative action and self-evaluation.
1211.115 Assurance required.
1211.120 Transfers of property.
1211.125 Effect of other requirements.
1211.130 Effect of employment opportunities.
1211.135 Designation of responsible employee and adoption of grievance procedures.
1211.140 Dissemination of policy.

Subpart B—Coverage

1211.200 Application.
1211.205 Educational institutions and other entities controlled by religious organizations.
1211.210 Military and merchant marine educational institutions.
1211.215 Membership practices of certain organizations.
1211.220 Admissions.
1211.225 Educational institutions eligible to submit transition plans.
1211.230 Transition plans.
1211.235 Statutory amendments.

Subpart C—Discrimination on the Basis of Sex in Admission and Recruitment Prohibited

1211.300 Admission.
1211.305 Preference in admission.
1211.310 Recruitment.

Subpart D—Discrimination on the Basis of Sex in Education Programs or Activities Prohibited

1211.400 Education programs or activities.
1211.405 Housing.
1211.410 Comparable facilities.
1211.415 Access to course offerings.
1211.420 Access to schools operated by LEAs.
1211.425 Counseling and use of appraisal and counseling materials.
1211.430 Financial assistance.
1211.435 Employment assistance to students.
1211.440 Health and insurance benefits and services.
1211.445 Marital or parental status.
1211.450 Athletics.
1211.455 Textbooks and curricular material.

Subpart E—Discrimination on the Basis of Sex in Employment in Education Programs or Activities Prohibited

1211.500 Employment.
1211.505 Employment criteria.
1211.510 Recruitment.
1211.515 Compensation.
1211.520 Job classification and structure.
1211.525 Fringe benefits.
1211.530 Marital or parental status.
1211.535 Effect of state or local law or other requirements.
1211.540 Advertising.
1211.545 Pre-employment inquiries.
1211.550 Sex as a bona fide occupational qualification.

Subpart F—Procedures

1211.600 Notice of covered programs.
1211.605 Compliance information.
1211.610 Conduct of investigations.
1211.615 Procedure for effecting compliance.
1211.620 Hearings.
1211.625 Decisions and notices.
1211.630 Judicial review.
1211.635 Forms and instructions; coordination.

AUTHORITY: 20 U.S.C. 1681, 1682, 1683, 1685, 1686, 1687, 1688.

SOURCE: 65 FR 52865, 52886, Aug. 30, 2000, unless otherwise noted.

Subpart A—Introduction

§ 1211.100 Purpose and effective date.

The purpose of these Title IX regulations is to effectuate Title IX of the Education Amendments of 1972, as amended (except sections 904 and 906 of those Amendments) (20 U.S.C. 1681, 1682, 1683, 1685, 1686, 1687, 1688), which is designed to eliminate (with certain exceptions) discrimination on the basis of sex in any education program or activity receiving Federal financial assistance, whether or not such program or activity is offered or sponsored by an educational institution as defined in these Title IX regulations. The effective date of these Title IX regulations shall be September 29, 2000.

§ 1211.105 Definitions.

As used in these Title IX regulations, the term:

Administratively separate unit means a school, department, or college of an educational institution (other than a local educational agency) admission to which is independent of admission to any other component of such institution.

Admission means selection for part-time, full-time, special, associate, transfer, exchange, or any other enrollment, membership, or matriculation in or at an education program or activity operated by a recipient.

Applicant means one who submits an application, request, or plan required to be approved by an official of the Federal agency that awards Federal financial assistance, or by a recipient, as a condition to becoming a recipient.

Designated agency official means Executive Director, National Historical Publications and Records Commission.

Educational institution means a local educational agency (LEA) as defined by 20 U.S.C. 8801(18), a preschool, a private elementary or secondary school, or an applicant or recipient that is an institution of graduate higher education, an institution of undergraduate higher education, an institution of professional education, or an institution of vocational education, as defined in this section.

Federal financial assistance means any of the following, when authorized or extended under a law administered by the Federal agency that awards such assistance:

(1) A grant or loan of Federal financial assistance, including funds made available for:

(i) The acquisition, construction, renovation, restoration, or repair of a building or facility or any portion thereof; and

(ii) Scholarships, loans, grants, wages, or other funds extended to any entity for payment to or on behalf of students admitted to that entity, or extended directly to such students for payment to that entity.

(2) A grant of Federal real or personal property or any interest therein, including surplus property, and the proceeds of the sale or transfer of such property, if the Federal share of the fair market value of the property is not, upon such sale or transfer, properly accounted for to the Federal Government.

(3) Provision of the services of Federal personnel.

(4) Sale or lease of Federal property or any interest therein at nominal consideration, or at consideration reduced for the purpose of assisting the recipient or in recognition of public interest to be served thereby, or permission to use Federal property or any interest therein without consideration.

(5) Any other contract, agreement, or arrangement that has as one of its purposes the provision of assistance to any education program or activity, except a contract of insurance or guaranty.

Institution of graduate higher education means an institution that:

(1) Offers academic study beyond the bachelor of arts or bachelor of science degree, whether or not leading to a certificate of any higher degree in the liberal arts and sciences;

(2) Awards any degree in a professional field beyond the first professional degree (regardless of whether the first professional degree in such field is awarded by an institution of undergraduate higher education or professional education); or

(3) Awards no degree and offers no further academic study, but operates ordinarily for the purpose of facilitating research by persons who have received the highest graduate degree in any field of study.

Institution of professional education means an institution (except any institution of undergraduate higher education) that offers a program of academic study that leads to a first professional degree in a field for which there is a national specialized accrediting agency recognized by the Secretary of Education.

Institution of undergraduate higher education means:

(1) An institution offering at least two but less than four years of college-level study beyond the high school level, leading to a diploma or an associate degree, or wholly or principally creditable toward a baccalaureate degree; or

(2) An institution offering academic study leading to a baccalaureate degree; or

(3) An agency or body that certifies credentials or offers degrees, but that may or may not offer academic study.

Institution of vocational education means a school or institution (except an institution of professional or graduate or undergraduate higher education) that has as its primary purpose preparation of students to pursue a technical, skilled, or semiskilled occupation or trade, or to pursue study in a technical field, whether or not the school or institution offers certificates, diplomas, or degrees and whether or not it offers full-time study.

Recipient means any State or political subdivision thereof, or any instrumentality of a State or political subdivision thereof, any public or private agency, institution, or organization, or other entity, or any person, to whom Federal financial assistance is extended directly or through another recipient and that operates an education program or activity that receives such assistance, including any subunit, successor, assignee, or transferee thereof.

Student means a person who has gained admission.

Title IX means Title IX of the Education Amendments of 1972, Public Law 92–318, 86 Stat. 235, 373 (codified as amended at 20 U.S.C. 1681–1688) (except sections 904 and 906 thereof), as amended by section 3 of Public Law 93–568, 88 Stat. 1855, by section 412 of the Education Amendments of 1976, Public Law 94–482, 90 Stat. 2234, and by Section 3 of Public Law 100–259, 102 Stat. 28, 28–29 (20 U.S.C. 1681, 1682, 1683, 1685, 1686, 1687, 1688).

Title IX regulations means the provisions set forth at 36 CFR 1211.100 through 1211.635.

Transition plan means a plan subject to the approval of the Secretary of Education pursuant to section 901(a)(2) of the Education Amendments of 1972, 20 U.S.C. 1681(a)(2), under which an educational institution operates in making the transition from being an educational institution that admits only students of one sex to being one that admits students of both sexes without discrimination.

§ 1211.110 Remedial and affirmative action and self-evaluation.

(a) *Remedial action*. If the designated agency official finds that a recipient has discriminated against persons on the basis of sex in an education program or activity, such recipient shall take such remedial action as the designated agency official deems necessary to overcome the effects of such discrimination.

(b) *Affirmative action*. In the absence of a finding of discrimination on the basis of sex in an education program or activity, a recipient may take affirmative action consistent with law to overcome the effects of conditions that resulted in limited participation therein by persons of a particular sex. Nothing in these Title IX regulations shall be interpreted to alter any affirmative action obligations that a recipient may have under Executive Order 11246, 3 CFR, 1964–1965 Comp., p. 339; as amended by Executive Order 11375, 3 CFR, 1966–1970 Comp., p. 684; as amended by Executive Order 11478, 3 CFR, 1966–1970 Comp., p. 803; as amended by Executive Order 12086, 3 CFR, 1978 Comp., p. 230; as amended by Executive Order 12107, 3 CFR, 1978 Comp., p. 264.

(c) *Self-evaluation*. Each recipient education institution shall, within one year of September 29, 2000:

(1) Evaluate, in terms of the requirements of these Title IX regulations, its current policies and practices and the effects thereof concerning admission of students, treatment of students, and employment of both academic and non-

academic personnel working in connection with the recipient's education program or activity;

(2) Modify any of these policies and practices that do not or may not meet the requirements of these Title IX regulations; and

(3) Take appropriate remedial steps to eliminate the effects of any discrimination that resulted or may have resulted from adherence to these policies and practices.

(d) *Availability of self-evaluation and related materials.* Recipients shall maintain on file for at least three years following completion of the evaluation required under paragraph (c) of this section, and shall provide to the designated agency official upon request, a description of any modifications made pursuant to paragraph (c)(2) of this section and of any remedial steps taken pursuant to paragraph (c)(3) of this section.

§ 1211.115 Assurance required.

(a) *General.* Either at the application stage or the award stage, Federal agencies must ensure that applications for Federal financial assistance or awards of Federal financial assistance contain, be accompanied by, or be covered by a specifically identified assurance from the applicant or recipient, satisfactory to the designated agency official, that each education program or activity operated by the applicant or recipient and to which these Title IX regulations apply will be operated in compliance with these Title IX regulations. An assurance of compliance with these Title IX regulations shall not be satisfactory to the designated agency official if the applicant or recipient to whom such assurance applies fails to commit itself to take whatever remedial action is necessary in accordance with § 1211.110(a) to eliminate existing discrimination on the basis of sex or to eliminate the effects of past discrimination whether occurring prior to or subsequent to the submission to the designated agency official of such assurance.

(b) *Duration of obligation.* (1) In the case of Federal financial assistance extended to provide real property or structures thereon, such assurance shall obligate the recipient or, in the case of a subsequent transfer, the transferee, for the period during which the real property or structures are used to provide an education program or activity.

(2) In the case of Federal financial assistance extended to provide personal property, such assurance shall obligate the recipient for the period during which it retains ownership or possession of the property.

(3) In all other cases such assurance shall obligate the recipient for the period during which Federal financial assistance is extended.

(c) *Form.* (1) The assurances required by paragraph (a) of this section, which may be included as part of a document that addresses other assurances or obligations, shall include that the applicant or recipient will comply with all applicable Federal statutes relating to nondiscrimination. These include but are not limited to: Title IX of the Education Amendments of 1972, as amended (20 U.S.C. 1681–1683, 1685–1688).

(2) The designated agency official will specify the extent to which such assurances will be required of the applicant's or recipient's subgrantees, contractors, subcontractors, transferees, or successors in interest.

§ 1211.120 Transfers of property.

If a recipient sells or otherwise transfers property financed in whole or in part with Federal financial assistance to a transferee that operates any education program or activity, and the Federal share of the fair market value of the property is not upon such sale or transfer properly accounted for to the Federal Government, both the transferor and the transferee shall be deemed to be recipients, subject to the provisions of §§ 1211.205 through 1211.235(a).

§ 1211.125 Effect of other requirements.

(a) *Effect of other Federal provisions.* The obligations imposed by these Title IX regulations are independent of, and do not alter, obligations not to discriminate on the basis of sex imposed by Executive Order 11246, 3 CFR, 1964–1965 Comp., p. 339; as amended by Executive Order 11375, 3 CFR, 1966–1970 Comp., p. 684; as amended by Executive

Order 11478, 3 CFR, 1966–1970 Comp., p. 803; as amended by Executive Order 12087, 3 CFR, 1978 Comp., p. 230; as amended by Executive Order 12107, 3 CFR, 1978 Comp., p. 264; sections 704 and 855 of the Public Health Service Act (42 U.S.C. 295m, 298b-2); Title VII of the Civil Rights Act of 1964 (42 U.S.C. 2000e *et seq.*); the Equal Pay Act of 1963 (29 U.S.C. 206); and any other Act of Congress or Federal regulation.

(b) *Effect of State or local law or other requirements.* The obligation to comply with these Title IX regulations is not obviated or alleviated by any State or local law or other requirement that would render any applicant or student ineligible, or limit the eligibility of any applicant or student, on the basis of sex, to practice any occupation or profession.

(c) *Effect of rules or regulations of private organizations.* The obligation to comply with these Title IX regulations is not obviated or alleviated by any rule or regulation of any organization, club, athletic or other league, or association that would render any applicant or student ineligible to participate or limit the eligibility or participation of any applicant or student, on the basis of sex, in any education program or activity operated by a recipient and that receives Federal financial assistance.

§ 1211.130 Effect of employment opportunities.

The obligation to comply with these Title IX regulations is not obviated or alleviated because employment opportunities in any occupation or profession are or may be more limited for members of one sex than for members of the other sex.

§ 1211.135 Designation of responsible employee and adoption of grievance procedures.

(a) *Designation of responsible employee.* Each recipient shall designate at least one employee to coordinate its efforts to comply with and carry out its responsibilities under these Title IX regulations, including any investigation of any complaint communicated to such recipient alleging its noncompliance with these Title IX regulations or alleging any actions that would be prohibited by these Title IX regulations. The recipient shall notify all its students and employees of the name, office address, and telephone number of the employee or employees appointed pursuant to this paragraph.

(b) *Complaint procedure of recipient.* A recipient shall adopt and publish grievance procedures providing for prompt and equitable resolution of student and employee complaints alleging any action that would be prohibited by these Title IX regulations.

§ 1211.140 Dissemination of policy.

(a) *Notification of policy.* (1) Each recipient shall implement specific and continuing steps to notify applicants for admission and employment, students and parents of elementary and secondary school students, employees, sources of referral of applicants for admission and employment, and all unions or professional organizations holding collective bargaining or professional agreements with the recipient, that it does not discriminate on the basis of sex in the educational programs or activities that it operates, and that it is required by Title IX and these Title IX regulations not to discriminate in such a manner. Such notification shall contain such information, and be made in such manner, as the designated agency official finds necessary to apprise such persons of the protections against discrimination assured them by Title IX and these Title IX regulations, but shall state at least that the requirement not to discriminate in education programs or activities extends to employment therein, and to admission thereto unless §§ 1211.300 through 1211.310 do not apply to the recipient, and that inquiries concerning the application of Title IX and these Title IX regulations to such recipient may be referred to the employee designated pursuant to § 1211.135, or to the designated agency official.

(2) Each recipient shall make the initial notification required by paragraph (a)(1) of this section within 90 days of September 29, 2000 or of the date these Title IX regulations first apply to such recipient, whichever comes later, which notification shall include publication in:

(i) Newspapers and magazines operated by such recipient or by student, alumnae, or alumni groups for or in connection with such recipient; and

(ii) Memoranda or other written communications distributed to every student and employee of such recipient.

(b) *Publications.* (1) Each recipient shall prominently include a statement of the policy described in paragraph (a) of this section in each announcement, bulletin, catalog, or application form that it makes available to any person of a type, described in paragraph (a) of this section, or which is otherwise used in connection with the recruitment of students or employees.

(2) A recipient shall not use or distribute a publication of the type described in paragraph (b)(1) of this section that suggests, by text or illustration, that such recipient treats applicants, students, or employees differently on the basis of sex except as such treatment is permitted by these Title IX regulations.

(c) *Distribution.* Each recipient shall distribute without discrimination on the basis of sex each publication described in paragraph (b)(1) of this section, and shall apprise each of its admission and employment recruitment representatives of the policy of nondiscrimination described in paragraph (a) of this section, and shall require such representatives to adhere to such policy.

Subpart B—Coverage

§ 1211.200 Application.

Except as provided in §§ 1211.205 through 1211.235(a), these Title IX regulations apply to every recipient and to each education program or activity operated by such recipient that receives Federal financial assistance.

§ 1211.205 Educational institutions and other entities controlled by religious organizations.

(a) *Exemption.* These Title IX regulations do not apply to any operation of an educational institution or other entity that is controlled by a religious organization to the extent that application of these Title IX regulations would not be consistent with the religious tenets of such organization.

(b) *Exemption claims.* An educational institution or other entity that wishes to claim the exemption set forth in paragraph (a) of this section shall do so by submitting in writing to the designated agency official a statement by the highest-ranking official of the institution, identifying the provisions of these Title IX regulations that conflict with a specific tenet of the religious organization.

§ 1211.210 Military and merchant marine educational institutions.

These Title IX regulations do not apply to an educational institution whose primary purpose is the training of individuals for a military service of the United States or for the merchant marine.

§ 1211.215 Membership practices of certain organizations.

(a) *Social fraternities and sororities.* These Title IX regulations do not apply to the membership practices of social fraternities and sororities that are exempt from taxation under section 501(a) of the Internal Revenue Code of 1954, 26 U.S.C. 501(a), the active membership of which consists primarily of students in attendance at institutions of higher education.

(b) *YMCA, YWCA, Girl Scouts, Boy Scouts, and Camp Fire Girls.* These Title IX regulations do not apply to the membership practices of the Young Men's Christian Association (YMCA), the Young Women's Christian Association (YWCA), the Girl Scouts, the Boy Scouts, and Camp Fire Girls.

(c) *Voluntary youth service organizations.* These Title IX regulations do not apply to the membership practices of a voluntary youth service organization that is exempt from taxation under section 501(a) of the Internal Revenue Code of 1954, 26 U.S.C. 501(a), and the membership of which has been traditionally limited to members of one sex and principally to persons of less than nineteen years of age.

§ 1211.220 Admissions.

(a) Admissions to educational institutions prior to June 24, 1973, are not covered by these Title IX regulations.

(b) *Administratively separate units.* For the purposes only of this section,

§§ 1211.225 and 1211.230, and §§ 1211.300 through 1211.310, each administratively separate unit shall be deemed to be an educational institution.

(c) *Application of §§ 1211.300 through 1211.310.* Except as provided in paragraphs (d) and (e) of this section, §§ 1211.300 through 1211.310 apply to each recipient. A recipient to which §§ 1211.300 through 1211.310 apply shall not discriminate on the basis of sex in admission or recruitment in violation of §§ 1211.300 through 1211.310.

(d) *Educational institutions.* Except as provided in paragraph (e) of this section as to recipients that are educational institutions, §§ 1211.300 through 1211.310 apply only to institutions of vocational education, professional education, graduate higher education, and public institutions of undergraduate higher education.

(e) *Public institutions of undergraduate higher education.* §§ 1211.300 through 1211.310 do not apply to any public institution of undergraduate higher education that traditionally and continually from its establishment has had a policy of admitting students of only one sex.

§ 1211.225 Educational institutions eligible to submit transition plans.

(a) *Application.* This section applies to each educational institution to which §§ 1211.300 through 1211.310 apply that:

(1) Admitted students of only one sex as regular students as of June 23, 1972; or

(2) Admitted students of only one sex as regular students as of June 23, 1965, but thereafter admitted, as regular students, students of the sex not admitted prior to June 23, 1965.

(b) *Provision for transition plans.* An educational institution to which this section applies shall not discriminate on the basis of sex in admission or recruitment in violation of §§ 1211.300 through 1211.310.

§ 1211.230 Transition plans.

(a) *Submission of plans.* An institution to which § 1211.225 applies and that is composed of more than one administratively separate unit may submit either a single transition plan applicable to all such units, or a separate transition plan applicable to each such unit.

(b) *Content of plans.* In order to be approved by the Secretary of Education, a transition plan shall:

(1) State the name, address, and Federal Interagency Committee on Education Code of the educational institution submitting such plan, the administratively separate units to which the plan is applicable, and the name, address, and telephone number of the person to whom questions concerning the plan may be addressed. The person who submits the plan shall be the chief administrator or president of the institution, or another individual legally authorized to bind the institution to all actions set forth in the plan.

(2) State whether the educational institution or administratively separate unit admits students of both sexes as regular students and, if so, when it began to do so.

(3) Identify and describe with respect to the educational institution or administratively separate unit any obstacles to admitting students without discrimination on the basis of sex.

(4) Describe in detail the steps necessary to eliminate as soon as practicable each obstacle so identified and indicate the schedule for taking these steps and the individual directly responsible for their implementation.

(5) Include estimates of the number of students, by sex, expected to apply for, be admitted to, and enter each class during the period covered by the plan.

(c) *Nondiscrimination.* No policy or practice of a recipient to which § 1211.225 applies shall result in treatment of applicants to or students of such recipient in violation of §§ 1211.300 through 1211.310 unless such treatment is necessitated by an obstacle identified in paragraph (b)(3) of this section and a schedule for eliminating that obstacle has been provided as required by paragraph (b)(4) of this section.

(d) *Effects of past exclusion.* To overcome the effects of past exclusion of students on the basis of sex, each educational institution to which § 1211.225 applies shall include in its transition plan, and shall implement, specific steps designed to encourage individuals of the previously excluded sex to apply

for admission to such institution. Such steps shall include instituting recruitment programs that emphasize the institution's commitment to enrolling students of the sex previously excluded.

§ 1211.235 Statutory amendments.

(a) This section, which applies to all provisions of these Title IX regulations, addresses statutory amendments to Title IX.

(b) These Title IX regulations shall not apply to or preclude:

(1) Any program or activity of the American Legion undertaken in connection with the organization or operation of any Boys State conference, Boys Nation conference, Girls State conference, or Girls Nation conference;

(2) Any program or activity of a secondary school or educational institution specifically for:

(i) The promotion of any Boys State conference, Boys Nation conference, Girls State conference, or Girls Nation conference; or

(ii) The selection of students to attend any such conference;

(3) Father-son or mother-daughter activities at an educational institution or in an education program or activity, but if such activities are provided for students of one sex, opportunities for reasonably comparable activities shall be provided to students of the other sex;

(4) Any scholarship or other financial assistance awarded by an institution of higher education to an individual because such individual has received such award in a single-sex pageant based upon a combination of factors related to the individual's personal appearance, poise, and talent. The pageant, however, must comply with other nondiscrimination provisions of Federal law.

(c) *Program or activity* or *program* means:

(1) All of the operations of any entity described in paragraphs (c)(1)(i) through (iv) of this section, any part of which is extended Federal financial assistance:

(i)(A) A department, agency, special purpose district, or other instrumentality of a State or of a local government; or

(B) The entity of such State or local government that distributes such assistance and each such department or agency (and each other State or local government entity) to which the assistance is extended, in the case of assistance to a State or local government;

(ii)(A) A college, university, or other postsecondary institution, or a public system of higher education; or

(B) A local educational agency (as defined in section 8801 of title 20), system of vocational education, or other school system;

(iii)(A) An entire corporation, partnership, or other private organization, or an entire sole proprietorship—

(*1*) If assistance is extended to such corporation, partnership, private organization, or sole proprietorship as a whole; or

(*2*) Which is principally engaged in the business of providing education, health care, housing, social services, or parks and recreation; or

(B) The entire plant or other comparable, geographically separate facility to which Federal financial assistance is extended, in the case of any other corporation, partnership, private organization, or sole proprietorship; or

(iv) Any other entity that is established by two or more of the entities described in paragraphs (c)(1)(i), (ii), or (iii) of this section.

(2)(i) *Program or activity* does not include any operation of an entity that is controlled by a religious organization if the application of 20 U.S.C. 1681 to such operation would not be consistent with the religious tenets of such organization.

(ii) For example, all of the operations of a college, university, or other postsecondary institution, including but not limited to traditional educational operations, faculty and student housing, campus shuttle bus service, campus restaurants, the bookstore, and other commercial activities are part of a ''program or activity'' subject to these Title IX regulations if the college, university, or other institution receives Federal financial assistance.

(d)(1) Nothing in these Title IX regulations shall be construed to require or prohibit any person, or public or private entity, to provide or pay for any

benefit or service, including the use of facilities, related to an abortion. Medical procedures, benefits, services, and the use of facilities, necessary to save the life of a pregnant woman or to address complications related to an abortion are not subject to this section.

(2) Nothing in this section shall be construed to permit a penalty to be imposed on any person or individual because such person or individual is seeking or has received any benefit or service related to a legal abortion. Accordingly, subject to paragraph (d)(1) of this section, no person shall be excluded from participation in, be denied the benefits of, or be subjected to discrimination under any academic, extracurricular, research, occupational training, employment, or other educational program or activity operated by a recipient that receives Federal financial assistance because such individual has sought or received, or is seeking, a legal abortion, or any benefit or service related to a legal abortion.

Subpart C—Discrimination on the Basis of Sex in Admission and Recruitment Prohibited

§ 1211.300 Admission.

(a) *General.* No person shall, on the basis of sex, be denied admission, or be subjected to discrimination in admission, by any recipient to which §§ 1211.300 through §§ 1211.310 apply, except as provided in § 1211.225 and § 1211.230.

(b) *Specific prohibitions.* (1) In determining whether a person satisfies any policy or criterion for admission, or in making any offer of admission, a recipient to which §§ 1211.300 through 1211.310 apply shall not:

(i) Give preference to one person over another on the basis of sex, by ranking applicants separately on such basis, or otherwise;

(ii) Apply numerical limitations upon the number or proportion of persons of either sex who may be admitted; or

(iii) Otherwise treat one individual differently from another on the basis of sex.

(2) A recipient shall not administer or operate any test or other criterion for admission that has a disproportionately adverse effect on persons on the basis of sex unless the use of such test or criterion is shown to predict validly success in the education program or activity in question and alternative tests or criteria that do not have such a disproportionately adverse effect are shown to be unavailable.

(c) *Prohibitions relating to marital or parental status.* In determining whether a person satisfies any policy or criterion for admission, or in making any offer of admission, a recipient to which §§ 1211.300 through 1211.310 apply:

(1) Shall not apply any rule concerning the actual or potential parental, family, or marital status of a student or applicant that treats persons differently on the basis of sex;

(2) Shall not discriminate against or exclude any person on the basis of pregnancy, childbirth, termination of pregnancy, or recovery therefrom, or establish or follow any rule or practice that so discriminates or excludes;

(3) Subject to § 1211.235(d), shall treat disabilities related to pregnancy, childbirth, termination of pregnancy, or recovery therefrom in the same manner and under the same policies as any other temporary disability or physical condition; and

(4) Shall not make pre-admission inquiry as to the marital status of an applicant for admission, including whether such applicant is ''Miss'' or ''Mrs.'' A recipient may make pre-admission inquiry as to the sex of an applicant for admission, but only if such inquiry is made equally of such applicants of both sexes and if the results of such inquiry are not used in connection with discrimination prohibited by these Title IX regulations.

§ 1211.305 Preference in admission.

A recipient to which §§ 1211.300 through 1211.310 apply shall not give preference to applicants for admission, on the basis of attendance at any educational institution or other school or entity that admits as students only or predominantly members of one sex, if the giving of such preference has the effect of discriminating on the basis of sex in violation of §§ 1211.300 through 1211.310.

§ 1211.310 Recruitment.

(a) *Nondiscriminatory recruitment.* A recipient to which §§ 1211.300 through 1211.310 apply shall not discriminate on the basis of sex in the recruitment and admission of students. A recipient may be required to undertake additional recruitment efforts for one sex as remedial action pursuant to § 1211.110(a), and may choose to undertake such efforts as affirmative action pursuant to § 1211.110(b).

(b) *Recruitment at certain institutions.* A recipient to which §§ 1211.300 through 1211.310 apply shall not recruit primarily or exclusively at educational institutions, schools, or entities that admit as students only or predominantly members of one sex, if such actions have the effect of discriminating on the basis of sex in violation of §§ 1211.300 through 1211.310.

Subpart D—Discrimination on the Basis of Sex in Education Programs or Activities Prohibited

§ 1211.400 Education programs or activities.

(a) *General.* Except as provided elsewhere in these Title IX regulations, no person shall, on the basis of sex, be excluded from participation in, be denied the benefits of, or be subjected to discrimination under any academic, extracurricular, research, occupational training, or other education program or activity operated by a recipient that receives Federal financial assistance. Sections 1211.400 through 1211.455 do not apply to actions of a recipient in connection with admission of its students to an education program or activity of a recipient to which §§ 1211.300 through 1211.310 do not apply, or an entity, not a recipient, to which §§ 1211.300 through 1211.310 would not apply if the entity were a recipient.

(b) *Specific prohibitions.* Except as provided in §§ 1211.400 through 1211.455, in providing any aid, benefit, or service to a student, a recipient shall not, on the basis of sex:

(1) Treat one person differently from another in determining whether such person satisfies any requirement or condition for the provision of such aid, benefit, or service;

(2) Provide different aid, benefits, or services or provide aid, benefits, or services in a different manner;

(3) Deny any person any such aid, benefit, or service;

(4) Subject any person to separate or different rules of behavior, sanctions, or other treatment;

(5) Apply any rule concerning the domicile or residence of a student or applicant, including eligibility for instate fees and tuition;

(6) Aid or perpetuate discrimination against any person by providing significant assistance to any agency, organization, or person that discriminates on the basis of sex in providing any aid, benefit, or service to students or employees;

(7) Otherwise limit any person in the enjoyment of any right, privilege, advantage, or opportunity.

(c) *Assistance administered by a recipient educational institution to study at a foreign institution.* A recipient educational institution may administer or assist in the administration of scholarships, fellowships, or other awards established by foreign or domestic wills, trusts, or similar legal instruments, or by acts of foreign governments and restricted to members of one sex, that are designed to provide opportunities to study abroad, and that are awarded to students who are already matriculating at or who are graduates of the recipient institution; *Provided,* that a recipient educational institution that administers or assists in the administration of such scholarships, fellowships, or other awards that are restricted to members of one sex provides, or otherwise makes available, reasonable opportunities for similar studies for members of the other sex. Such opportunities may be derived from either domestic or foreign sources.

(d) *Aids, benefits or services not provided by recipient.* (1) This paragraph (d) applies to any recipient that requires participation by any applicant, student, or employee in any education program or activity not operated wholly by such recipient, or that facilitates, permits, or considers such participation as part of or equivalent to an education program or activity operated by such recipient, including participation

in educational consortia and cooperative employment and student-teaching assignments.

(2) Such recipient:

(i) Shall develop and implement a procedure designed to assure itself that the operator or sponsor of such other education program or activity takes no action affecting any applicant, student, or employee of such recipient that these Title IX regulations would prohibit such recipient from taking; and

(ii) Shall not facilitate, require, permit, or consider such participation if such action occurs.

§ 1211.405 Housing.

(a) *Generally*. A recipient shall not, on the basis of sex, apply different rules or regulations, impose different fees or requirements, or offer different services or benefits related to housing, except as provided in this section (including housing provided only to married students).

(b) *Housing provided by recipient*. (1) A recipient may provide separate housing on the basis of sex.

(2) Housing provided by a recipient to students of one sex, when compared to that provided to students of the other sex, shall be as a whole:

(i) Proportionate in quantity to the number of students of that sex applying for such housing; and

(ii) Comparable in quality and cost to the student.

(c) *Other housing*. (1) A recipient shall not, on the basis of sex, administer different policies or practices concerning occupancy by its students of housing other than that provided by such recipient.

(2)(i) A recipient which, through solicitation, listing, approval of housing, or otherwise, assists any agency, organization, or person in making housing available to any of its students, shall take such reasonable action as may be necessary to assure itself that such housing as is provided to students of one sex, when compared to that provided to students of the other sex, is as a whole:

(A) Proportionate in quantity; and

(B) Comparable in quality and cost to the student.

(ii) A recipient may render such assistance to any agency, organization, or person that provides all or part of such housing to students of only one sex.

§ 1211.410 Comparable facilities.

A recipient may provide separate toilet, locker room, and shower facilities on the basis of sex, but such facilities provided for students of one sex shall be comparable to such facilities provided for students of the other sex.

§ 1211.415 Access to course offerings.

(a) A recipient shall not provide any course or otherwise carry out any of its education program or activity separately on the basis of sex, or require or refuse participation therein by any of its students on such basis, including health, physical education, industrial, business, vocational, technical, home economics, music, and adult education courses.

(b)(1) With respect to classes and activities in physical education at the elementary school level, the recipient shall comply fully with this section as expeditiously as possible but in no event later than one year from September 29, 2000. With respect to physical education classes and activities at the secondary and post-secondary levels, the recipient shall comply fully with this section as expeditiously as possible but in no event later than three years from September 29, 2000.

(2) This section does not prohibit grouping of students in physical education classes and activities by ability as assessed by objective standards of individual performance developed and applied without regard to sex.

(3) This section does not prohibit separation of students by sex within physical education classes or activities during participation in wrestling, boxing, rugby, ice hockey, football, basketball, and other sports the purpose or major activity of which involves bodily contact.

(4) Where use of a single standard of measuring skill or progress in a physical education class has an adverse effect on members of one sex, the recipient shall use appropriate standards that do not have such effect.

(5) Portions of classes in elementary and secondary schools, or portions of education programs or activities, that

deal exclusively with human sexuality may be conducted in separate sessions for boys and girls.

(6) Recipients may make requirements based on vocal range or quality that may result in a chorus or choruses of one or predominantly one sex.

§ 1211.420 Access to schools operated by LEAs.

A recipient that is a local educational agency shall not, on the basis of sex, exclude any person from admission to:

(a) Any institution of vocational education operated by such recipient; or

(b) Any other school or educational unit operated by such recipient, unless such recipient otherwise makes available to such person, pursuant to the same policies and criteria of admission, courses, services, and facilities comparable to each course, service, and facility offered in or through such schools.

§ 1211.425 Counseling and use of appraisal and counseling materials.

(a) *Counseling.* A recipient shall not discriminate against any person on the basis of sex in the counseling or guidance of students or applicants for admission.

(b) *Use of appraisal and counseling materials.* A recipient that uses testing or other materials for appraising or counseling students shall not use different materials for students on the basis of their sex or use materials that permit or require different treatment of students on such basis unless such different materials cover the same occupations and interest areas and the use of such different materials is shown to be essential to eliminate sex bias. Recipients shall develop and use internal procedures for ensuring that such materials do not discriminate on the basis of sex. Where the use of a counseling test or other instrument results in a substantially disproportionate number of members of one sex in any particular course of study or classification, the recipient shall take such action as is necessary to assure itself that such disproportion is not the result of discrimination in the instrument or its application.

(c) *Disproportion in classes.* Where a recipient finds that a particular class contains a substantially disproportionate number of individuals of one sex, the recipient shall take such action as is necessary to assure itself that such disproportion is not the result of discrimination on the basis of sex in counseling or appraisal materials or by counselors.

§ 1211.430 Financial assistance.

(a) *General.* Except as provided in paragraphs (b) and (c) of this section, in providing financial assistance to any of its students, a recipient shall not:

(1) On the basis of sex, provide different amounts or types of such assistance, limit eligibility for such assistance that is of any particular type or source, apply different criteria, or otherwise discriminate;

(2) Through solicitation, listing, approval, provision of facilities, or other services, assist any foundation, trust, agency, organization, or person that provides assistance to any of such recipient's students in a manner that discriminates on the basis of sex; or

(3) Apply any rule or assist in application of any rule concerning eligibility for such assistance that treats persons of one sex differently from persons of the other sex with regard to marital or parental status.

(b) *Financial aid established by certain legal instruments.* (1) A recipient may administer or assist in the administration of scholarships, fellowships, or other forms of financial assistance established pursuant to domestic or foreign wills, trusts, bequests, or similar legal instruments or by acts of a foreign government that require that awards be made to members of a particular sex specified therein; *Provided,* that the overall effect of the award of such sex-restricted scholarships, fellowships, and other forms of financial assistance does not discriminate on the basis of sex.

(2) To ensure nondiscriminatory awards of assistance as required in paragraph (b)(1) of this section, recipients shall develop and use procedures under which:

(i) Students are selected for award of financial assistance on the basis of nondiscriminatory criteria and not on

the basis of availability of funds restricted to members of a particular sex;

(ii) An appropriate sex-restricted scholarship, fellowship, or other form of financial assistance is allocated to each student selected under paragraph (b)(2)(i) of this section; and

(iii) No student is denied the award for which he or she was selected under paragraph (b)(2)(i) of this section because of the absence of a scholarship, fellowship, or other form of financial assistance designated for a member of that student's sex.

(c) *Athletic scholarships.* (1) To the extent that a recipient awards athletic scholarships or grants-in-aid, it must provide reasonable opportunities for such awards for members of each sex in proportion to the number of students of each sex participating in interscholastic or intercollegiate athletics.

(2) A recipient may provide separate athletic scholarships or grants-in-aid for members of each sex as part of separate athletic teams for members of each sex to the extent consistent with this paragraph (c) and § 1211.450.

§ 1211.435 Employment assistance to students.

(a) *Assistance by recipient in making available outside employment.* A recipient that assists any agency, organization, or person in making employment available to any of its students:

(1) Shall assure itself that such employment is made available without discrimination on the basis of sex; and

(2) Shall not render such services to any agency, organization, or person that discriminates on the basis of sex in its employment practices.

(b) *Employment of students by recipients.* A recipient that employs any of its students shall not do so in a manner that violates §§ 1211.500 through 1211.550.

§ 1211.440 Health and insurance benefits and services.

Subject to § 1211.235(d), in providing a medical, hospital, accident, or life insurance benefit, service, policy, or plan to any of its students, a recipient shall not discriminate on the basis of sex, or provide such benefit, service, policy, or plan in a manner that would violate §§ 1211.500 through 1211.550 if it were provided to employees of the recipient. This section shall not prohibit a recipient from providing any benefit or service that may be used by a different proportion of students of one sex than of the other, including family planning services. However, any recipient that provides full coverage health service shall provide gynecological care.

§ 1211.445 Marital or parental status.

(a) *Status generally.* A recipient shall not apply any rule concerning a student's actual or potential parental, family, or marital status that treats students differently on the basis of sex.

(b) *Pregnancy and related conditions.* (1) A recipient shall not discriminate against any student, or exclude any student from its education program or activity, including any class or extracurricular activity, on the basis of such student's pregnancy, childbirth, false pregnancy, termination of pregnancy, or recovery therefrom, unless the student requests voluntarily to participate in a separate portion of the program or activity of the recipient.

(2) A recipient may require such a student to obtain the certification of a physician that the student is physically and emotionally able to continue participation as long as such a certification is required of all students for other physical or emotional conditions requiring the attention of a physician.

(3) A recipient that operates a portion of its education program or activity separately for pregnant students, admittance to which is completely voluntary on the part of the student as provided in paragraph (b)(1) of this section, shall ensure that the separate portion is comparable to that offered to non-pregnant students.

(4) Subject to § 1211.235(d), a recipient shall treat pregnancy, childbirth, false pregnancy, termination of pregnancy and recovery therefrom in the same manner and under the same policies as any other temporary disability with respect to any medical or hospital benefit, service, plan, or policy that such recipient administers, operates, offers, or participates in with respect to students admitted to the recipient's educational program or activity.

(5) In the case of a recipient that does not maintain a leave policy for its students, or in the case of a student who does not otherwise qualify for leave under such a policy, a recipient shall treat pregnancy, childbirth, false pregnancy, termination of pregnancy, and recovery therefrom as a justification for a leave of absence for as long a period of time as is deemed medically necessary by the student's physician, at the conclusion of which the student shall be reinstated to the status that she held when the leave began.

§ 1211.450 Athletics.

(a) *General*. No person shall, on the basis of sex, be excluded from participation in, be denied the benefits of, be treated differently from another person, or otherwise be discriminated against in any interscholastic, intercollegiate, club, or intramural athletics offered by a recipient, and no recipient shall provide any such athletics separately on such basis.

(b) *Separate teams*. Notwithstanding the requirements of paragraph (a) of this section, a recipient may operate or sponsor separate teams for members of each sex where selection for such teams is based upon competitive skill or the activity involved is a contact sport. However, where a recipient operates or sponsors a team in a particular sport for members of one sex but operates or sponsors no such team for members of the other sex, and athletic opportunities for members of that sex have previously been limited, members of the excluded sex must be allowed to try out for the team offered unless the sport involved is a contact sport. For the purposes of these Title IX regulations, contact sports include boxing, wrestling, rugby, ice hockey, football, basketball, and other sports the purpose or major activity of which involves bodily contact.

(c) *Equal opportunity*. (1) A recipient that operates or sponsors interscholastic, intercollegiate, club, or intramural athletics shall provide equal athletic opportunity for members of both sexes. In determining whether equal opportunities are available, the designated agency official will consider, among other factors:

(i) Whether the selection of sports and levels of competition effectively accommodate the interests and abilities of members of both sexes;

(ii) The provision of equipment and supplies;

(iii) Scheduling of games and practice time;

(iv) Travel and per diem allowance;

(v) Opportunity to receive coaching and academic tutoring;

(vi) Assignment and compensation of coaches and tutors;

(vii) Provision of locker rooms, practice, and competitive facilities;

(viii) Provision of medical and training facilities and services;

(ix) Provision of housing and dining facilities and services;

(x) Publicity.

(2) For purposes of paragraph (c)(1) of this section, unequal aggregate expenditures for members of each sex or unequal expenditures for male and female teams if a recipient operates or sponsors separate teams will not constitute noncompliance with this section, but the designated agency official may consider the failure to provide necessary funds for teams for one sex in assessing equality of opportunity for members of each sex.

(d) *Adjustment period*. A recipient that operates or sponsors interscholastic, intercollegiate, club, or intramural athletics at the elementary school level shall comply fully with this section as expeditiously as possible but in no event later than one year from September 29, 2000. A recipient that operates or sponsors interscholastic, intercollegiate, club, or intramural athletics at the secondary or postsecondary school level shall comply fully with this section as expeditiously as possible but in no event later than three years from September 29, 2000.

§ 1211.455 Textbooks and curricular material.

Nothing in these Title IX regulations shall be interpreted as requiring or prohibiting or abridging in any way the use of particular textbooks or curricular materials.

Subpart E—Discrimination on the Basis of Sex in Employment in Education Programs or Activities Prohibited

§ 1211.500 Employment.

(a) *General*. (1) No person shall, on the basis of sex, be excluded from participation in, be denied the benefits of, or be subjected to discrimination in employment, or recruitment, consideration, or selection therefor, whether full-time or part-time, under any education program or activity operated by a recipient that receives Federal financial assistance.

(2) A recipient shall make all employment decisions in any education program or activity operated by such recipient in a nondiscriminatory manner and shall not limit, segregate, or classify applicants or employees in any way that could adversely affect any applicant's or employee's employment opportunities or status because of sex.

(3) A recipient shall not enter into any contractual or other relationship which directly or indirectly has the effect of subjecting employees or students to discrimination prohibited by §§ 1211.500 through 1211.550, including relationships with employment and referral agencies, with labor unions, and with organizations providing or administering fringe benefits to employees of the recipient.

(4) A recipient shall not grant preferences to applicants for employment on the basis of attendance at any educational institution or entity that admits as students only or predominantly members of one sex, if the giving of such preferences has the effect of discriminating on the basis of sex in violation of these Title IX regulations.

(b) *Application*. The provisions of §§ 1211.500 through 1211.550 apply to:

(1) Recruitment, advertising, and the process of application for employment;

(2) Hiring, upgrading, promotion, consideration for and award of tenure, demotion, transfer, layoff, termination, application of nepotism policies, right of return from layoff, and rehiring;

(3) Rates of pay or any other form of compensation, and changes in compensation;

(4) Job assignments, classifications, and structure, including position descriptions, lines of progression, and seniority lists;

(5) The terms of any collective bargaining agreement;

(6) Granting and return from leaves of absence, leave for pregnancy, childbirth, false pregnancy, termination of pregnancy, leave for persons of either sex to care for children or dependents, or any other leave;

(7) Fringe benefits available by virtue of employment, whether or not administered by the recipient;

(8) Selection and financial support for training, including apprenticeship, professional meetings, conferences, and other related activities, selection for tuition assistance, selection for sabbaticals and leaves of absence to pursue training;

(9) Employer-sponsored activities, including social or recreational programs; and

(10) Any other term, condition, or privilege of employment.

§ 1211.505 Employment criteria.

A recipient shall not administer or operate any test or other criterion for any employment opportunity that has a disproportionately adverse effect on persons on the basis of sex unless:

(a) Use of such test or other criterion is shown to predict validly successful performance in the position in question; and

(b) Alternative tests or criteria for such purpose, which do not have such disproportionately adverse effect, are shown to be unavailable.

§1211.510 Recruitment.

(a) *Nondiscriminatory recruitment and hiring*. A recipient shall not discriminate on the basis of sex in the recruitment and hiring of employees. Where a recipient has been found to be presently discriminating on the basis of sex in the recruitment or hiring of employees, or has been found to have so discriminated in the past, the recipient shall recruit members of the sex so discriminated against so as to overcome the effects of such past or present discrimination.

(b) *Recruitment patterns.* A recipient shall not recruit primarily or exclusively at entities that furnish as applicants only or predominantly members of one sex if such actions have the effect of discriminating on the basis of sex in violation of §§ 1211.500 through 1211.550.

§ 1211.515 Compensation.

A recipient shall not make or enforce any policy or practice that, on the basis of sex:

(a) Makes distinctions in rates of pay or other compensation;

(b) Results in the payment of wages to employees of one sex at a rate less than that paid to employees of the opposite sex for equal work on jobs the performance of which requires equal skill, effort, and responsibility, and that are performed under similar working conditions.

§ 1211.520 Job classification and structure.

A recipient shall not:

(a) Classify a job as being for males or for females;

(b) Maintain or establish separate lines of progression, seniority lists, career ladders, or tenure systems based on sex; or

(c) Maintain or establish separate lines of progression, seniority systems, career ladders, or tenure systems for similar jobs, position descriptions, or job requirements that classify persons on the basis of sex, unless sex is a bona fide occupational qualification for the positions in question as set forth in § 1211.550.

§ 1211.525 Fringe benefits.

(a) *''Fringe benefits'' defined.* For purposes of these Title IX regulations, *fringe benefits* means: Any medical, hospital, accident, life insurance, or retirement benefit, service, policy or plan, any profit-sharing or bonus plan, leave, and any other benefit or service of employment not subject to the provision of § 1211.515.

(b) *Prohibitions.* A recipient shall not:

(1) Discriminate on the basis of sex with regard to making fringe benefits available to employees or make fringe benefits available to spouses, families, or dependents of employees differently upon the basis of the employee's sex;

(2) Administer, operate, offer, or participate in a fringe benefit plan that does not provide for equal periodic benefits for members of each sex and for equal contributions to the plan by such recipient for members of each sex; or

(3) Administer, operate, offer, or participate in a pension or retirement plan that establishes different optional or compulsory retirement ages based on sex or that otherwise discriminates in benefits on the basis of sex.

§ 1211.530 Marital or parental status.

(a) *General.* A recipient shall not apply any policy or take any employment action:

(1) Concerning the potential marital, parental, or family status of an employee or applicant for employment that treats persons differently on the basis of sex; or

(2) Which is based upon whether an employee or applicant for employment is the head of household or principal wage earner in such employee's or applicant's family unit.

(b) *Pregnancy.* A recipient shall not discriminate against or exclude from employment any employee or applicant for employment on the basis of pregnancy, childbirth, false pregnancy, termination of pregnancy, or recovery therefrom.

(c) *Pregnancy as a temporary disability.* Subject to § 1211.235(d), a recipient shall treat pregnancy, childbirth, false pregnancy, termination of pregnancy, recovery therefrom, and any temporary disability resulting therefrom as any other temporary disability for all job-related purposes, including commencement, duration, and extensions of leave, payment of disability income, accrual of seniority and any other benefit or service, and reinstatement, and under any fringe benefit offered to employees by virtue of employment.

(d) *Pregnancy leave.* In the case of a recipient that does not maintain a leave policy for its employees, or in the case of an employee with insufficient leave or accrued employment time to qualify for leave under such a policy, a recipient shall treat pregnancy, childbirth, false pregnancy, termination of pregnancy, and recovery therefrom as a

justification for a leave of absence without pay for a reasonable period of time, at the conclusion of which the employee shall be reinstated to the status that she held when the leave began or to a comparable position, without decrease in rate of compensation or loss of promotional opportunities, or any other right or privilege of employment.

§ 1211.535 Effect of state or local law or other requirements.

(a) *Prohibitory requirements.* The obligation to comply with §§1211.500 through 1211.550 is not obviated or alleviated by the existence of any State or local law or other requirement that imposes prohibitions or limits upon employment of members of one sex that are not imposed upon members of the other sex.

(b) *Benefits.* A recipient that provides any compensation, service, or benefit to members of one sex pursuant to a State or local law or other requirement shall provide the same compensation, service, or benefit to members of the other sex.

§ 1211.540 Advertising.

A recipient shall not in any advertising related to employment indicate preference, limitation, specification, or discrimination based on sex unless sex is a bona fide occupational qualification for the particular job in question.

§ 1211.545 Pre-employment inquiries.

(a) *Marital status.* A recipient shall not make pre-employment inquiry as to the marital status of an applicant for employment, including whether such applicant is ''Miss'' or ''Mrs.''

(b) *Sex.* A recipient may make pre-employment inquiry as to the sex of an applicant for employment, but only if such inquiry is made equally of such applicants of both sexes and if the results of such inquiry are not used in connection with discrimination prohibited by these Title IX regulations.

§ 1211.550 Sex as a bona fide occupational qualification.

A recipient may take action otherwise prohibited by §§1211.500 through 1211.550 provided it is shown that sex is a bona fide occupational qualification for that action, such that consideration of sex with regard to such action is essential to successful operation of the employment function concerned. A recipient shall not take action pursuant to this section that is based upon alleged comparative employment characteristics or stereotyped characterizations of one or the other sex, or upon preference based on sex of the recipient, employees, students, or other persons, but nothing contained in this section shall prevent a recipient from considering an employee's sex in relation to employment in a locker room or toilet facility used only by members of one sex.

Subpart F—Procedures

§ 1211.600 Notice of covered programs.

Within 60 days of September 29, 2000, each Federal agency that awards Federal financial assistance shall publish in the FEDERAL REGISTER a notice of the programs covered by these Title IX regulations. Each such Federal agency shall periodically republish the notice of covered programs to reflect changes in covered programs. Copies of this notice also shall be made available upon request to the Federal agency's office that enforces Title IX.

§ 1211.605 Compliance information.

(a) *Cooperation and assistance.* The designated agency official shall to the fullest extent practicable seek the cooperation of recipients in obtaining compliance with these Title IX regulations and shall provide assistance and guidance to recipients to help them comply voluntarily with these Title IX regulations.

(b) *Compliance reports.* Each recipient shall keep such records and submit to the designated agency official (or designee) timely, complete, and accurate compliance reports at such times, and in such form and containing such information, as the designated agency official (or designee) may determine to be necessary to enable the official to ascertain whether the recipient has complied or is complying with these Title IX regulations. In the case of any program under which a primary recipient extends Federal financial assistance to

any other recipient, such other recipient shall also submit such compliance reports to the primary recipient as may be necessary to enable the primary recipient to carry out its obligations under these Title IX regulations.

(c) *Access to sources of information.* Each recipient shall permit access by the designated agency official (or designee) during normal business hours to such of its books, records, accounts, and other sources of information, and its facilities as may be pertinent to ascertain compliance with these Title IX regulations. Where any information required of a recipient is in the exclusive possession of any other agency, institution, or person and this agency, institution, or person shall fail or refuse to furnish this information the recipient shall so certify in its report and shall set forth what efforts it has made to obtain the information. Asserted considerations of privacy or confidentiality may not operate to bar the agency from evaluating or seeking to enforce compliance with these Title IX regulations. Information of a confidential nature obtained in connection with compliance evaluation or enforcement shall not be disclosed except where necessary in formal enforcement proceedings or where otherwise required by law.

(d) *Information to beneficiaries and participants.* Each recipient shall make available to participants, beneficiaries, and other interested persons such information regarding the provisions of these Title IX regulations and their applicability to the program for which the recipient receives Federal financial assistance, and make such information available to them in such manner, as the designated agency official finds necessary to apprise such persons of the protections against discrimination assured them by Title IX and these Title IX regulations.

[65 FR 52886, Aug. 30, 2000]

§ 1211.610 Conduct of investigations.

(a) *Periodic compliance reviews.* The designated agency official (or designee) shall from time to time review the practices of recipients to determine whether they are complying with these Title IX regulations.

(b) *Complaints.* Any person who believes himself or herself or any specific class of individuals to be subjected to discrimination prohibited by these Title IX regulations may by himself or herself or by a representative file with the designated agency official (or designee) a written complaint. A complaint must be filed not later than 180 days from the date of the alleged discrimination, unless the time for filing is extended by the designated agency official (or designee).

(c) *Investigations.* The designated agency official (or designee) will make a prompt investigation whenever a compliance review, report, complaint, or any other information indicates a possible failure to comply with these Title IX regulations. The investigation should include, where appropriate, a review of the pertinent practices and policies of the recipient, the circumstances under which the possible noncompliance with these Title IX regulations occurred, and other factors relevant to a determination as to whether the recipient has failed to comply with these Title IX regulations.

(d) *Resolution of matters.* (1) If an investigation pursuant to paragraph (c) of this section indicates a failure to comply with these Title IX regulations, the designated agency official (or designee) will so inform the recipient and the matter will be resolved by informal means whenever possible. If it has been determined that the matter cannot be resolved by informal means, action will be taken as provided for in § 1211.615.

(2) If an investigation does not warrant action pursuant to paragraph (d)(1) of this section the designated agency official (or designee) will so inform the recipient and the complainant, if any, in writing.

(e) *Intimidatory or retaliatory acts prohibited.* No recipient or other person shall intimidate, threaten, coerce, or discriminate against any individual for the purpose of interfering with any right or privilege secured by Title IX or these Title IX regulations, or because he or she has made a complaint, testified, assisted, or participated in any manner in an investigation, proceeding, or hearing under these Title

IX regulations. The identity of complainants shall be kept confidential except to the extent necessary to carry out the purposes of these Title IX regulations, including the conduct of any investigation, hearing, or judicial proceeding arising under these Title IX regulations.

[65 FR 52887, Aug. 30, 2000]

§ 1211.615 Procedure for effecting compliance.

(a) *General*. If there appears to be a failure or threatened failure to comply with these Title IX regulations, and if the noncompliance or threatened noncompliance cannot be corrected by informal means, compliance with these Title IX regulations may be effected by the suspension or termination of or refusal to grant or to continue Federal financial assistance or by any other means authorized by law. Such other means may include, but are not limited to:

(1) A reference to the Department of Justice with a recommendation that appropriate proceedings be brought to enforce any rights of the United States under any law of the United States, or any assurance or other contractual undertaking; and

(2) Any applicable proceeding under State or local law.

(b) *Noncompliance with § 1211.115*. If an applicant fails or refuses to furnish an assurance or otherwise fails or refuses to comply with a requirement imposed by or pursuant to § 1211.115, Federal financial assistance may be refused in accordance with the procedures of paragraph (c) of this section. The agency shall not be required to provide assistance in such a case during the pendency of the administrative proceedings under paragraph (c) of this section except that the agency shall continue assistance during the pendency of such proceedings where such assistance is due and payable pursuant to an application therefor approved prior to September 29, 2000.

(c) *Termination of or refusal to grant or to continue Federal financial assistance*. (1) No order suspending, terminating, or refusing to grant or continue Federal financial assistance shall become effective until:

(i) The designated agency official has advised the applicant or recipient of its failure to comply and has determined that compliance cannot be secured by voluntary means;

(ii) There has been an express finding on the record, after opportunity for hearing, of a failure by the applicant or recipient to comply with a requirement imposed by or pursuant to these Title IX regulations; and

(iii) The expiration of 30 days after the Archivist has filed with the committee of the House, and the committee of the Senate having legislative jurisdiction over the program involved, a full written report of the circumstances and the grounds for such action.

(2) Any action to suspend or terminate or to refuse to grant or to continue Federal financial assistance shall be limited to the particular political entity, or part thereof, or other applicant or recipient as to whom such a finding has been made and shall be limited in its effect to the particular program, or part thereof, in which such noncompliance has been so found.

(d) *Other means authorized by law*. (1) No action to effect compliance by any other means authorized by law shall be taken until:

(i) The designated agency official has determined that compliance cannot be secured by voluntary means;

(ii) The recipient has been notified of its failure to comply and of the action to be taken to effect compliance; and

(iii) The expiration of at least 10 days from the mailing of such notice to the recipient.

(2) During this period of at least 10 days additional efforts shall be made to persuade the recipient to comply with these Title IX regulations and to take such corrective action as may be appropriate.

[65 FR 52887, Aug. 30, 2000]

§ 1211.620 Hearings.

(a) *Opportunity for hearing*. Whenever an opportunity for a hearing is required by § 1211.615(c), reasonable notice shall be given by registered or certified mail, return receipt requested, to the affected applicant or recipient. This notice shall advise the applicant or recipient of the action proposed to

be taken, the specific provision under which the proposed action against it is to be taken, and the matters of fact or law asserted as the basis for this action, and either:

(1) Fix a date not less than 20 days after the date of such notice within which the applicant or recipient may request of the designated agency official that the matter be scheduled for hearing; or

(2) Advise the applicant or recipient that the matter in question has been set down for hearing at a stated place and time. The time and place so fixed shall be reasonable and shall be subject to change for cause. The complainant, if any, shall be advised of the time and place of the hearing. An applicant or recipient may waive a hearing and submit written information and argument for the record. The failure of an applicant or recipient to request a hearing for which a date has been set shall be deemed to be a waiver of the right to a hearing under 20 U.S.C. 1682 and § 1211.615(c) and consent to the making of a decision on the basis of such information as may be filed as the record.

(b) *Time and place of hearing.* Hearings shall be held at the offices of the agency in Washington, DC, at a time fixed by the designated agency official unless the official determines that the convenience of the applicant or recipient or of the agency requires that another place be selected. Hearings shall be held before a hearing officer designated in accordance with 5 U.S.C. 556(b).

(c) *Right to counsel.* In all proceedings under this section, the applicant or recipient and the agency shall have the right to be represented by counsel.

(d) *Procedures, evidence, and record.* (1) The hearing, decision, and any administrative review thereof shall be conducted in conformity with 5 U.S.C. 554–557 (sections 5 through 8 of the Administrative Procedure Act), and in accordance with such rules of procedure as are proper (and not inconsistent with this section) relating to the conduct of the hearing, giving of notices subsequent to those provided for in paragraph (a) of this section, taking of testimony, exhibits, arguments and briefs, requests for findings, and other related matters. Both the agency and the applicant or recipient shall be entitled to introduce all relevant evidence on the issues as stated in the notice for hearing or as determined by the hearing officer at the outset of or during the hearing. Any person (other than a Government employee considered to be on official business) who, having been invited or requested to appear and testify as a witness on the Government's behalf, attends at a time and place scheduled for a hearing provided for by these Title IX regulations, may be reimbursed for his or her travel and actual expenses of attendance in an amount not to exceed the amount payable under the standardized travel regulations to a Government employee traveling on official business.

(2) Technical rules of evidence shall not apply to hearings conducted pursuant to these Title IX regulations, but rules or principles designed to assure production of the most credible evidence available and to subject testimony to test by cross-examination shall be applied where reasonably necessary by the hearing officer. The hearing officer may exclude irrelevant, immaterial, or unduly repetitious evidence. All documents and other evidence offered or taken for the record shall be open to examination by the parties and opportunity shall be given to refute facts and arguments advanced on either side of the issues. A transcript shall be made of the oral evidence except to the extent the substance thereof is stipulated for the record. All decisions shall be based upon the hearing record and written findings shall be made.

(e) *Consolidated or joint hearings.* In cases in which the same or related facts are asserted to constitute noncompliance with these Title IX regulations with respect to two or more programs to which these Title IX regulations apply, or noncompliance with these Title IX regulations and the regulations of one or more other Federal departments or agencies issued under Title IX, the designated agency official may, by agreement with such other departments or agencies where applicable, provide for the conduct of consolidated or joint hearings, and for the application to such hearings of rules of procedures not inconsistent with these

Title IX regulations. Final decisions in such cases, insofar as these Title IX regulations are concerned, shall be made in accordance with § 1211.625.

[65 FR 52887, Aug. 30, 2000]

§ 1211.625 Decisions and notices.

(a) *Decisions by hearing officers.* After a hearing is held by a hearing officer such hearing officer shall either make an initial decision, if so authorized, or certify the entire record including recommended findings and proposed decision to the reviewing authority for a final decision, and a copy of such initial decision or certification shall be mailed to the applicant or recipient and to the complainant, if any. Where the initial decision referred to in this paragraph or in paragraph (c) of this section is made by the hearing officer, the applicant or recipient or the counsel for the agency may, within the period provided for in the rules of procedure issued by the designated agency official, file with the reviewing authority exceptions to the initial decision, with the reasons therefor. Upon the filing of such exceptions the reviewing authority shall review the initial decision and issue its own decision thereof including the reasons therefor. In the absence of exceptions the initial decision shall constitute the final decision, subject to the provisions of paragraph (e) of this section.

(b) *Decisions on record or review by the reviewing authority.* Whenever a record is certified to the reviewing authority for decision or it reviews the decision of a hearing officer pursuant to paragraph (a) or (c) of this section, the applicant or recipient shall be given reasonable opportunity to file with it briefs or other written statements of its contentions, and a copy of the final decision of the reviewing authority shall be given in writing to the applicant or recipient and to the complainant, if any.

(c) *Decisions on record where a hearing is waived.* Whenever a hearing is waived pursuant to § 1211.620, the reviewing authority shall make its final decision on the record or refer the matter to a hearing officer for an initial decision to be made on the record. A copy of such decision shall be given in writing to the applicant or recipient, and to the complainant, if any.

(d) *Rulings required.* Each decision of a hearing officer or reviewing authority shall set forth a ruling on each finding, conclusion, or exception presented, and shall identify the requirement or requirements imposed by or pursuant to these Title IX regulations with which it is found that the applicant or recipient has failed to comply.

(e) *Review in certain cases by the Archivist of the United States.* If the Archivist has not personally made the final decision referred to in paragraph (a), (b), or (c) of this section, a recipient or applicant or the counsel for the agency may request the Archivist to review a decision of the reviewing authority in accordance with rules of procedure issued by the designated agency official. Such review is not a matter of right and shall be granted only where the Archivist determines there are special and important reasons therefor. The Archivist may grant or deny such request, in whole or in part. The Archivist may also review such a decision upon his own motion in accordance with rules of procedure issued by the National Archives and Records Administration. In the absence of a review under this paragraph (e), a final decision referred to in paragraph (a), (b), or (c) of this section shall become the final decision of the agency when the Archivist transmits it as such to Congressional committees with the report required under 20 U.S.C. 1682. Failure of an applicant or recipient to file an exception with the reviewing authority or to request review under this paragraph (e) shall not be deemed a failure to exhaust administrative remedies for the purpose of obtaining judicial review.

(f) *Content of orders.* The final decision may provide for suspension or termination of, or refusal to grant or continue Federal financial assistance, in whole or in part, to which these Title IX regulations apply, and may contain such terms, conditions, and other provisions as are consistent with and will effectuate the purposes of Title IX and these Title IX regulations, including provisions designed to assure that no Federal financial assistance to which these Title IX regulations apply will

thereafter be extended under such law or laws to the applicant or recipient determined by such decision to be in default in its performance of an assurance given by it pursuant to these Title IX regulations, or to have otherwise failed to comply with these Title IX regulations unless and until it corrects its noncompliance and satisfies the designated agency official that it will fully comply with these Title IX regulations.

(g) *Post-termination proceedings.* (1) An applicant or recipient adversely affected by an order issued under paragraph (f) of this section shall be restored to full eligibility to receive Federal financial assistance if it satisfies the terms and conditions of that order for such eligibility or if it brings itself into compliance with these Title IX regulations and provides reasonable assurance that it will fully comply with these Title IX regulations. An elementary or secondary school or school system that is unable to file an assurance of compliance shall be restored to full eligibility to receive Federal financial assistance if it files a court order or a plan for desegregation that meets the applicable requirements and provides reasonable assurance that it will comply with the court order or plan.

(2) Any applicant or recipient adversely affected by an order entered pursuant to paragraph (f) of this section may at any time request the designated agency official to restore fully its eligibility to receive Federal financial assistance. Any such request shall be supported by information showing that the applicant or recipient has met the requirements of paragraph (g)(1) of this section. If the designated agency official determines that those requirements have been satisfied, the official shall restore such eligibility.

(3) If the designated agency official denies any such request, the applicant or recipient may submit a request for a hearing in writing, specifying why it believes such official to have been in error. It shall thereupon be given an expeditious hearing, with a decision on the record, in accordance with rules of procedure issued by the designated agency official. The applicant or recipient will be restored to such eligibility if it proves at such hearing that it satisfied the requirements of paragraph (g)(1) of this section. While proceedings under this paragraph (g) are pending, the sanctions imposed by the order issued under paragraph (f) of this section shall remain in effect.

[65 FR 52888, Aug. 30, 2000]

§ 1211.630 Judicial review.

Action taken pursuant to 20 U.S.C. 1682 is subject to judicial review as provided in 20 U.S.C. 1683.

[65 FR 52889, Aug. 30, 2000]

§ 1211.635 Forms and instructions; coordination.

(a) *Forms and instructions.* The designated agency official shall issue and promptly make available to interested persons forms and detailed instructions and procedures for implementing these Title IX regulations.

(b) *Supervision and coordination.* The Archivist or his designee may from time to time assign to officials of the agency, or to officials of other departments or agencies of the Government with the consent of such departments or agencies, responsibilities in connection with the effectuation of the purposes of Title IX and these Title IX regulations (other than responsibility for review as provided in § 1211.625(e)), including the achievements of effective coordination and maximum uniformity within the agency and within the Executive Branch of the Government in the application of Title IX and these Title IX regulations to similar programs and in similar situations. Any action taken, determination made, or requirement imposed by an official of another department or agency acting pursuant to an assignment of responsibility under this section shall have the same effect as though such action had been taken by the designated official of this agency.

[65 FR 52889, Aug. 30, 2000]

SUBCHAPTER B—RECORDS MANAGEMENT

PART 1220—FEDERAL RECORDS; GENERAL

Sec.
1220.1 Scope of subchapter.
1220.2 Responsibility for records management programs.

Subpart A—General Provisions

1220.10 Authority.
1220.12 Applicability.
1220.14 General definitions.
1220.16 Reports to the Congress and the Director of the Office of Management and Budget.
1220.18 Inspection of records.

Subpart B—Agency Records Management Programs

1220.30 Authority.
1220.32 Program content.
1220.34 Creation of records.
1220.36 Maintenance and use of records.
1220.38 Disposition of records.
1220.40 Liaison offices.
1220.42 Agency internal evaluations.

Subpart C—NARA Evaluation Program

1220.50 Authority.
1220.52 Purpose and scope.
1220.54 Evaluation process.
1220.56 Evaluation report.
1220.58 Agency action plans and progress reports.
1220.60 Followup notification and reviews.

AUTHORITY: 44 U.S.C. 2104(a) and chs. 29 and 33.

SOURCE: 50 FR 26930, June 28, 1985, unless otherwise noted.

§ 1220.1 Scope of subchapter.

Subchapter B prescribes policies for Federal agencies' records management programs relating to records creation and maintenance, adequate documentation, and proper records disposition.

§ 1220.2 Responsibility for records management programs.

The National Archives and Records Administration Act of 1984 amended the records management statutes to divide records management responsibilities between the National Archives and Records Administration (NARA) and the General Services Administration (GSA). Under the Act, NARA is responsible for adequacy of documentation and records disposition and GSA is responsible for economy and efficiency in records management. NARA regulations are codified in this subchapter. GSA records management regulations are codified in 41 CFR part 102–193. Federal agency records management programs must be in compliance with regulations promulgated by both NARA and GSA.

[57 FR 19807, May 8, 1992, as amended at 67 FR 31962, May 13, 2002]

Subpart A—General Provisions

§ 1220.10 Authority.

The regulations in this part are issued under the provisions of the National Archives and Records Administration Act of 1984 (Pub. L. 98–497, 44 U.S.C. 101 *note*).

§ 1220.12 Applicability.

The regulations in subchapter B apply to all Federal agencies as defined in § 1220.14.

§ 1220.14 General definitions.

As used in subchapter B—

Agency (see *Executive agency* and *Federal agency)*.

Adequate and proper documentation means a record of the conduct of Government business that is complete and accurate to the extent required to document the organization, functions, policies, decisions, procedures, and essential transactions of the agency and that is designed to furnish the information necessary to protect the legal and financial rights of the Government and of persons directly affected by the agency's activities.

Appraisal is the process by which the National Archives and Records Administration (NARA) determines the value and thus the final disposition of Federal records, making them either temporary or permanent.

Commercial records storage facility is a private sector commercial facility that

offers records storage, retrieval, and disposition services.

Comprehensive schedule is a printed agency manual or directive containing descriptions of and disposition instructions for all documentary materials, record and nonrecord, created by a Federal agency or major component of an Executive department. Unless taken from the General Records Schedules (GRS) issued by NARA, the disposition instructions for agency records must be approved by NARA on one or more Standard Form(s) 115, Request for Records Disposition Authority, prior to issuance by the agency. The disposition instructions for the nonrecord material are established by the agency and do not require NARA approval.

Contingent records are records whose final disposition is dependent on an action or event, such as sale of property or destruction of a facility, which will take place at some unspecified time in the future.

Disposition means those actions taken regarding records no longer needed for the conduct of the regular current business of the agency.

Documentary materials is a collective term for records and nonrecord materials that refers to all media on which information is recorded, regardless of the nature of the medium or the method or circumstances of recording.

Evaluation means the selective or comprehensive inspection, audit, or review of one or more Federal agency records management programs for effectiveness and for compliance with applicable laws and regulations. It includes recommendations for correcting or improving records management policies, procedures, and activities, and follow-up activities, including reporting on such activities, for implementing the recommendations.

Executive agency means any executive department or independent establishment in the executive branch of the Government, including any wholly-owned Government corporation.

Federal agency means any executive agency or any establishment in the legislative or judicial branch of the Government (except the Supreme Court, Senate, the House of Representatives, and the Architect of the Capitol and any activities under his direction). (44 U.S.C. 2901(14)).

File means an arrangement of records. The term is used to denote papers, photographs, photographic copies, maps, machine-readable information, or other recorded information regardless of physical form or characteristics, accumulated or maintained in filing equipment, boxes, or machine-readable media, or on shelves, and occupying office or storage space.

National Archives of the United States means those records that have been determined by the Archivist of the United States to have sufficient historical or other value to warrant their continued preservation by the Federal Government and that have been transferred to the legal custody of the Archivist of the United States on a Standard Form 258 (Agreement to Transfer Records to the National Archives of the United States).

Nonrecord materials are those Federally owned informational materials that do not meet the statutory definition of records (44 U.S.C. 3301) or that have been excluded from coverage by the definition. Excluded materials are extra copies of documents kept only for reference, stocks of publications and processed documents, and library or museum materials intended solely for reference or exhibit.

Permanent record means any Federal record that has been determined by NARA to have sufficient value to warrant its preservation in the National Archives of the United States. Permanent records include all records accessioned by NARA into the National Archives of the United States and later increments of the same records, and those for which the disposition is permanent on SF 115s, Request for Records Disposition Authority, approved by NARA on or after May 14, 1973.

Recordkeeping requirements means all statements in statutes, regulations, and agency directives or authoritative issuances, that provide general and specific requirements for Federal agency personnel on particular records to be created and maintained by the agency.

Recordkeeping system is a manual or automated system in which records are

collected, organized, and categorized to facilitate their preservation, retrieval, use, and disposition.

Records include all books, papers, maps, photographs, machine readable materials, or other documentary materials, regardless of physical form or characteristics, made or received by an agency of the United States Government under Federal law or in connection with the transaction of public business and preserved or appropriate for preservation by that agency or its legitimate successor as evidence of the organization, functions, policies, decisions, procedures, operations or other activities of the Government or because of the informational value of the data in them (44 U.S.C. 3301).

Records center is defined in 44 U.S.C. 2901(6) as an establishment maintained and operated by the Archivist or by another Federal agency primarily for the storage, servicing, security, and processing of records which need to be preserved for varying periods of time and need not be retained in office equipment or space.

Records maintenance and use, as used in subchapter B, means any activity involving location of records of a Federal agency or the storage, retrieval, and handling of records kept at office file locations by or for a Federal agency.

Records management, as used in subchapter B, means the planning, controlling, directing, organizing, training, promoting, and other managerial activities involved with respect to records creation, records maintenance and use, and records disposition in order to achieve adequate and proper documentation of the policies and transactions of the Federal Government and effective and economical management of agency operations.

Records schedule or *schedule* means

(a) An SF 115, Request for Records Disposition Authority, that has been approved by NARA to authorize the disposition of Federal records;

(b) A General Records Schedule (GRS) issued by NARA; or

(c) A printed agency manual or directive containing the records descriptions and disposition instructions approved by NARA on one or more SF 115s or issued by NARA in the GRS. (See also the definition *Comprehensive schedule*.)

Records storage facility is a records center or a commercial records storage facility, as defined in this section, i.e., a facility used by a Federal agency to store Federal records, whether that facility is operated and maintained by the agency, by NARA, by another Federal agency, or by a private commercial entity.

Series means file units or documents arranged according to a filing system or kept together because they relate to a particular subject or function, result from the same activity, document a specific kind of transaction, take a particular physical form, or have some other relationship arising out of their creation, receipt, or use, such as restrictions on access and use. Also called a *records series*.

Temporary records. A temporary record is any record which has been determined by the Archivist of the United States to have insufficient value (on the basis of current standards) to warrant its preservation by the National Archives and Records Administration. This determination may take the form of:

(a) A series of records designated as disposable in an agency records disposition schedule approved by NARA (Standard Form 115, Request for Records Disposition Authority); or

(b) A series of records designated as disposable in a General Records Schedule.

Unscheduled records are records the final disposition of which has not been approved by NARA. Unscheduled records are those that have not been included on a Standard Form 115, Request for Records Disposition Authority, approved by NARA; those described but not authorized for disposal on an SF 115 approved prior to May 14, 1973; and those described on an SF 115 but not approved by NARA (withdrawn, canceled, or disapproved).

[45 FR 5705, Jan. 24, 1980 and 50 FR 26931, 26933, June 28, 1985, as amended at 52 FR 34134, Sept. 9, 1987; 55 FR 27423, 27427, July 2, 1990; 57 FR 19807, May 8, 1992; 59 FR 28783, June 3, 1994; 60 FR 44639, Aug. 28, 1995; 64 FR 67663, Dec. 2, 1999; 66 FR 27027, May 16, 2001]

§ 1220.16 Reports to the Congress and the Director of the Office of Management and Budget.

Under 44 U.S.C. 2904(c)(8), the Archivist of the United States is required to report to Congress and the Office of Management and Budget annually on the results of records management activities, including evaluations of responses by Federal agencies to any recommendations resulting from studies or inspections conducted by NARA.

§ 1220.18 Inspection of records.

(a) In order for NARA to conduct inspections and studies required in 44 U.S.C. Chapter 29 and records appraisals in 44 U.S.C. Chapter 33, agencies must provide access for authorized NARA staff members to records in the agency's legal custody, regardless of the physical location of the records.

(b) In accordance with 44 U.S.C. 2906, when NARA inspects an agency record which is contained in a system of records subject to the Privacy Act of 1974 (5 U.S.C. 552a), the records shall be maintained by the Archivist or his designee as a record contained in a system of records or considered to be a record contained in a system of records for the purposes of subsections (b), (c), and (i) of section 552a of title 5.

[50 FR 26930, June 28, 1985, as amended at 64 FR 67664, Dec. 2, 1999]

Subpart B—Agency Records Management Programs

§ 1220.30 Authority.

Section 3101 of title 44 U.S.C. requires the head of each Federal agency to make and preserve records containing adequate and proper documentation of the organization, functions, policies, decisions, procedures and essential transactions of the agency and designed to furnish the information necessary to protect the legal and financial rights of the Government and of persons directly affected by the agency's activities.

§ 1220.32 Program content.

Agency programs shall, among other things, provide for:

(a) Cooperation with NARA in developing and applying standards, procedures, and techniques designed to improve the management of records, promote the maintenance and security of records deemed appropriate for permanent preservation, and facilitate the segregation and disposal of temporary records.

(b) Compliance with sections 2101–2117, 2501–2507, 2901–2909, 3101–3107, and 3301–3314 of title 44 U.S.C. and with NARA regulations issued in title 36 of the Code of Federal Regulations.

§ 1220.34 Creation of records.

Adequate records management controls over the creation of Federal agency records shall be instituted to ensure that agency functions are adequately and properly documented. Federal agencies shall also comply with GSA regulations on creation of records found in 41 CFR part 102–193.

[57 FR 19807, May 8, 1992, as amended at 67 FR 31962, May 13, 2002]

§ 1220.36 Maintenance and use of records.

(a) Agencies must institute adequate records management controls over the maintenance and use of records wherever they are located to ensure that all records, regardless of format or medium, are organized, classified, and described to promote their accessibility, and make them available for use by all appropriate agency staff for their authorized retention period. Agencies must also maintain permanent records in a format that will permit transfer to the National Archives of the United States.

(b) Agencies must ensure that they maintain adequate information about their records moved to an off-site records storage facility (see 36 CFR 1228.154). Agencies must also create and maintain records that document the destruction of temporary records and the transfer of permanent records to the National Archives of the United States. The disposition of records that provide such documentation is governed by General Records Schedule (GRS) 16.

(c) Agencies must also comply with GSA regulations on the maintenance

and use of records found in 41 CFR part 102–193.

[64 FR 67664, Dec. 2, 1999, as amended at 67 FR 31962, May 13, 2002]

§ 1220.38 Disposition of records.

(a) Agencies must ensure the proper, authorized disposition of their records, regardless of format or medium, so that permanent records are preserved and temporary records no longer of use to an agency are promptly deleted or disposed of in accordance with the approved records schedule when their required retention period expires. As an intermediate step when records are not needed for current day-to-day reference, they may be transferred to a records storage facility.

(b) Agencies must secure NARA approval of a records schedule or apply the appropriate General Records Schedule item before destroying any temporary records or transferring permanent records to the National Archives of the United States (see 36 CFR part 1228).

[64 FR 67664, Dec. 2, 1999]

§ 1220.40 Liaison offices.

An office or offices within each Federal agency shall be assigned responsibility for the development of the records management program required by this part. The office to which responsibility is assigned shall be reported to the NARA Life Cycle Management Division (NWML), 8601 Adelphi Rd., College Park, MD 20740–6001. The name, title, and telephone number of the official or officials authorized by the head of the agency to approve records disposition schedules and transfers of records to the custody of the National Archives shall also be submitted to the Life Cycle Management Division.

[50 FR 26930, June 28, 1985, as amended at 63 FR 35829, July 1, 1998]

§ 1220.42 Agency internal evaluations.

Each agency must periodically evaluate its records management programs relating to records creation and record keeping requirements, maintenance and use of records, and records disposition. These evaluations shall include periodic monitoring of staff determinations of the record status of documentary materials in all media, and implementation of these decisions. These evaluations should determine compliance with NARA regulations in this subchapter, including requirements for storage of agency records and records storage facilities in 36 CFR part 1228, subparts I and K, and assess the effectiveness of the agency's records management program.

[64 FR 67664, Dec. 2, 1999]

Subpart C—NARA Evaluation Program

SOURCE: 59 FR 28783, June 3, 1994, unless otherwise noted.

§ 1220.50 Authority.

44 U.S.C. chapter 29 vests in the Archivist of the United States the responsibility for providing guidance and assistance to Federal agencies with respect to ensuring adequate and proper documentation and proper records disposition. Sections 2904 and 2906 specifically authorize the Archivist to conduct inspections or surveys of records and records management programs and practices within and between Federal agencies and require officers and employees of agencies to cooperate fully in such inspections. Section 2904 also authorizes the Archivist to report to the appropriate oversight and appropriations committees of the Congress and the Director of OMB on the results of inspections, the responses by agencies to NARA evaluation recommendations, and estimates of the costs to the Federal government resulting from the failure to implement such recommendations.

§ 1220.52 Purpose and scope.

(a) NARA evaluations assess how effectively Federal agencies make and preserve complete and accurate records of their organization, functions, policies, decisions, procedures, and essential transactions; and maintain an active, continuing records management program including proper records disposition. Agencies shall be evaluated for compliance with requirements in 44 U.S.C. chapters 31 and 33 and all the

regulations issued thereunder in 36 CFR subchapter B.

(b) NARA evaluations may include comprehensive reviews of agency records management programs, or selective reviews focused on adequate and proper documentation, on records disposition, on the management of specific types of record media or on the management of records in particular program areas. NARA evaluations may be of one agency or may be multi-agency. These evaluations may be conducted solely within headquarters offices, only at field locations, or at a combination of field sites and headquarters.

(c) Evaluations will involve site visits by NARA; submission by NARA to the agency of a written report containing findings, analyses, and recommendations; and submission to NARA by the agency of an action plan for implementing the recommendations followed by regular progress reports. Interagency report control number 0153–NARA–AR has been assigned to the action plan and progress reports in accordance with GSA regulations in Title 41 of the CFR.

[59 FR 28783, June 3, 1994, as amended at 66 FR 27027, May 16, 2001]

§ 1220.54 Evaluation process.

(a) NARA shall select Federal agencies to be evaluated on the basis of perceived need by NARA or specific request by the agency, or on the basis of a compliance monitoring cycle developed by NARA. NARA will determine the scope of the evaluation. An agency may request an evaluation of its records management program by contacting the Director, Life Cycle Management Division; however, the final determination of agencies to be evaluated will be made by NARA. The heads of agencies will be notified in writing by the Archivist of the United States of the intent to conduct an evaluation and the scope of the evaluation at least 180 calendar days prior to initiating the evaluation.

(b) Once NARA has notified the agency, the agency head will, by the date specified in the Archivist's letter:

(1) Acknowledge in writing NARA's intention to evaluate, and provide the Archivist with the name and telephone number of the senior official with overall responsibility for records management and of a headquarters official who will work with NARA to facilitate the evaluation process;

(2) Provide written notification of the evaluation to all appropriate offices and employees and contractors potentially involved; this notification will include instructions to cooperate with NARA by setting up interviews, providing requested information, and making records available for inspection;

(3) Provide NARA with a copy of the written notification in paragraph (b)(2) of this section and with a list of names and telephone numbers of officials responsible for records management in field sites, if applicable, who will work with NARA during the evaluation;

(4) For comprehensive evaluations, provide NARA with a set of internal records management directives, orders, bulletins, or similar authoritative issuances; copies of the two most recent internal records management evaluations; and any special records-related reports. Included may be: issuances relating to adequate and proper documentation and record-keeping requirements; personal papers; management and disposition of textual, electronic, audiovisual, cartographic and architectural, micrographic, and vital records; disaster mitigation and recovery; and any other records-related documentation requested by NARA. A subset of this documentation will be requested for more limited evaluations;

(5) Provide NARA with a current version of the agency manual(s) covering records creation, maintenance, storage, and disposition, and a list of information systems maintained as required by OMB Circular A–130, section 9a(5), and a list of offices and/or functions and activities not currently covered by schedules;

(6) Arrange for appropriate management and program officials in headquarters and, if applicable, at field sites to be briefed by NARA at the beginning and at the end of the evaluation process; and

(7) Take immediate corrective action regarding any serious problems that

NARA may bring to the agency's attention during the course of the evaluation process such as the unauthorized destruction of records or the unauthorized donation or other transfer of records to non-NARA facilities.

[59 FR 28783, June 3, 1994, as amended at 63 FR 35829, July 1, 1998]

§ 1220.56 Evaluation report.

(a) NARA will submit a draft evaluation report for factual review and comment to the agency within 120 calendar days of the last evaluation site visit or exit briefing. After receipt of agency comments, NARA will finalize the report, incorporating any changes resulting from factual errors identified by the agency. The final report will be transmitted by the Archivist to the head of the agency within 30 calendar days of receiving comments from the agency.

(b) The head of the agency will:

(1) Comment within 60 calendar days, in writing, on the contents of the draft report. If necessary, agencies can request extensions. No response from the agency within the allotted time will indicate that the agency concurs in the factual accuracy of the draft report.

(2) Review the final report and assign implementation responsibility; and

(3) Distribute the final report to all concerned and appropriate persons and offices.

§ 1220.58 Agency action plans and progress reports.

(a) *Action plans.* (1) The action plan will be submitted to NARA within 90 calendar days after the date of transmittal of the final report. If necessary, agencies can request extensions. The plan shall be submitted by the agency head or the designated senior official for information resources management. The action plan will include:

(i) The name of the senior official and the office responsible for coordinating implementation agency-wide;

(ii) The specific action(s) the agency will take to implement each evaluation report recommendation. If an agency is unable to implement a recommendation, the rationale for not acting shall be documented in the action plan;

(iii) The name of the official and office or program responsible for the overall coordination of the agency's followup actions who will be the liaison with NARA;

(iv) The estimated time needed to complete each action and the proposed quarter and year for starting and completing each action;

(v) Major milestones with dates for tracking the completion of implementation actions that are expected to extend longer than 3 years past the date of the action plan; and,

(vi) If requested by NARA, separate action plans for each field site visited, incorporating the information required by paragraphs (a)(1)(i) through (a)(1)(v) of this section.

(2) NARA will analyze the action plan(s) submitted by the agency for adequacy and effectiveness in implementing the recommendations contained in the evaluation report. NARA will provide comments to the agency on the plan(s) within 60 calendar days.

(3) The agency will revise the action plan until it is approved by NARA.

(b) *Progress reports.* (1) Once the action plan(s) has been approved by NARA, the head of the agency will submit progress reports to NARA every 6 months. The reports will include:

(i) A description of what has been accomplished on each action since the last report;

(ii) The current status of the action;

(iii) Any changes in the offices or programs responsible for over-all or specific action implementation; and,

(iv) If appropriate, explanation of any delays in implementation and revised target dates and milestones for completion of the action.

(2) The agency will continue to submit these progress reports until NARA and the agency agree all actions have been completed, NARA and the agency agree that the agency has implemented the recommendation(s) to the fullest extent possible, or NARA indicates in writing that regular progress reports are no longer required.

(3) NARA will review and comment on agency progress reports, and work closely with the agency to provide assistance in evaluation implementation.

§ 1220.60 Follow-up notification and reviews.

(a) If NARA determines that there is not substantial progress in the full implementation of evaluation recommendations or that the agency has not corrected serious problems identified in the report, the Archivist, after notifying the head of the agency, may notify Congress and appropriate Federal oversight agencies of the evaluation findings and the agency response.

(b) NARA may initiate follow-up reviews at specific offices or field sites. Results of these follow-up reviews shall be communicated to the head of the agency and, if NARA determines it to be appropriate, to Congress and Federal oversight agencies.

PART 1222—CREATION AND MAINTENANCE OF FEDERAL RECORDS

Subpart A—General

Sec.
1222.10 Authority.
1222.12 Defining Federal records.

Subpart B—Program Requirements

1222.20 Agency responsibilities.

Subpart C—Standards for Agency Recordkeeping Requirements

1222.30 Purpose.
1222.32 General requirements.
1222.34 Identifying Federal records.
1222.36 Identifying personal papers.
1222.38 Categories of documentary materials to be covered by recordkeeping requirements.
1222.40 Removal of records.
1222.42 Removal of nonrecord materials.
1222.44 Directives documenting agency programs, policies, and procedures.
1222.46 Recordkeeping requirements of other agencies.
1222.48 Data created or received and maintained for the Government by contractors.
1222.50 Records maintenance and storage.

AUTHORITY: 44 U.S.C. 2904, 3101, and 3102.

SOURCE: 55 FR 27423, July 2, 1990, unless otherwise noted.

Subpart A—General

§ 1222.10 Authority.

(a) 44 U.S.C. 2904, vests in the Archivist of the United States responsibility for providing guidance and assistance to Federal agencies with respect to ensuring adequate and proper documentation of the policies and transactions of the Federal Government, including developing and issuing standards to improve the management of records.

(b) 44 U.S.C. 3101, requires that the head of each Federal agency shall make and preserve records containing adequate and proper documentation of the organization, functions, policies, decisions, procedures, and essential transactions of the agency and designed to furnish the information necessary to protect the legal and financial rights of the Government and of persons directly affected by the agency's activities.

(c) 44 U.S.C. 3102, requires that the head of each Federal agency shall establish and maintain an active, continuing program for the economical and efficient management of the records of the agency. The program, among other things, shall provide for—

(1) Effective controls over the creation, and over the maintenance and use of records in the conduct of current business;

(2) Cooperation with the Administrator of General Services and the Archivist in applying standards, procedures, and techniques designed to improve the management of records, promote the maintenance and security of records deemed appropriate for preservation, and facilitate the segregation and disposal of records of temporary value.

§ 1222.12 Defining Federal records.

(a) The statutory definition of Federal records is contained in 44 U.S.C. 3301 and is stated in § 1220.14 of this chapter.

(b) Several key terms, phrases, and concepts in the statutory definition of records are defined as follows:

(1) *Documentary materials* is a collective term for records, nonrecord materials, and personal papers that refers to all media containing recorded information, regardless of the nature of the media or the method(s) or circumstance(s) of recording.

(2) *Regardless of physical form or characteristics* means that the medium may be paper, film, disk, or other physical

type or form; and that the method of recording may be manual, mechanical, photographic, electronic, or any other combination of these or other technologies.

(3) *Made* means the act of creating and recording information by agency personnel in the course of their official duties, regardless of the method(s) or the medium involved. The act of recording is generally identifiable by the circulation of the information to others or by placing it in files accessible to others.

(4) *Received* means the acceptance or collection of documentary materials by agency personnel in the course of their official duties regardless of their origin (for example, other units of their agency, private citizens, public officials, other agencies, contractors, Government grantees) and regardless of how transmitted (in person or by messenger, mail, electronic means, or by any other method). In this context, the term does not refer to misdirected materials. It may or may not refer to loaned or seized materials depending on the conditions under which such materials came into agency custody or were used by the agency. Advice of legal counsel should be sought regarding the ''record'' status of loaned or seized materials.

(5) *Preserved* means the filing, storing, or any other method of systematically maintaining documentary materials by the agency. This term covers materials not only actually filed or otherwise systematically maintained but also those temporarily removed from existing filing systems.

(6) *Appropriate for preservation* means documentary materials made or received which in the judgment of the agency should be filed, stored, or otherwise systematically maintained by an agency because of the evidence of agency activities or information they contain, even though the materials may not be covered by its current filing or maintenance procedures.

[55 FR 27423, July 2, 1990; 55 FR 31982, Aug. 6, 1990]

Subpart B—Program Requirements

§ 1222.20 Agency responsibilities.

(a) The head of each Federal agency, in meeting the requirements of 44 U.S.C. 2904, 3101, and 3102, shall observe the responsibilities and standards set forth in this part. Agencies are also subject to regulations issued by the General Services Administration (GSA) in 41 CFR part 102–193.

(b) Each Federal agency shall:

(1) Assign to one or more offices of the agency the responsibility for the development and implementation of agency-wide programs to identify, develop, issue, and periodically review recordkeeping requirements for records for all agency activities at all levels and locations in all media including paper, microform, audiovisual, cartographic, and electronic (including those created or received using electronic mail);

(2) Integrate programs for the identification, development, issuance, and periodic review of recordkeeping requirements with other records and information resources management programs of the agency, including the requirement of close coordination between the office designated in 36 CFR 1222.20(b)(1) and the office assigned overall records management responsibility in accordance with 36 CFR 1220.40, if the two are different;

(3) Issue a directive(s) establishing program objectives, responsibilities, and authorities for agency recordkeeping requirements. Copies of the directive(s) (including subsequent amendments or supplements) shall be disseminated throughout the agency, as appropriate, and a copy shall be sent to NARA (NWML);

(4) Establish procedures for the participation of records management officials in developing new or revised agency programs, processes, systems, and procedures in order to ensure that adequate recordkeeping requirements are established and implemented;

(5) Ensure that adequate training is provided to all agency personnel on

policies, responsibilities, and techniques for the implementation of recordkeeping requirements and the distinction between records and nonrecord materials, regardless of media, including those materials created by individuals using computers to send or receive electronic mail;

(6) Develop and implement records schedules for all records created and received by the agency and obtain NARA approval of the schedules in accordance with 36 CFR part 1228;

(7) Ensure compliance with applicable Governmentwide policies, procedures, and standards relating to recordkeeping requirements as may be issued by the Office of Management and Budget, the General Services Administration, the National Archives and Records Administration, the National Institute of Standards and Technology, or other agencies, as appropriate;

(8) Review recordkeeping requirements, as part of the periodic information resources management reviews required by 44 U.S.C. 3506, or the periodic records management evaluations required by 36 CFR 1220.54, in order to validate their currency and to ensure that recordkeeping requirements are being implemented;

(9) Remind all employees annually of the agency's recordkeeping policies and of the sanctions provided for the unlawful removal or destruction of Federal records (18 U.S.C. 2071);

(10) Ensure that records storage facilities used to store the agency's records comply with the standards specified in 36 CFR part 1228, subpart K. The agency must also comply with 36 CFR 1228.240 by obtaining NARA approval of an agency records center or submitting documentation of compliance by a commercial records storage facility before the agency transfers records to that facility.

[55 FR 27423, July 2, 1990, as amended at 58 FR 49194, Sept. 22, 1993; 60 FR 44640, Aug. 28, 1995; 63 FR 35829, July 1, 1998; 64 FR 67664, Dec. 2, 1999; 67 FR 31962, May 13, 2002]

Subpart C—Standards for Agency Recordkeeping Requirements

§ 1222.30 Purpose.

(a) The clear articulation of recordkeeping requirements by Federal agencies is essential if agencies are to meet the requirements of 44 U.S.C. 3101 and 3102 with respect to creating, receiving, maintaining, and preserving adequate and proper documentation, and with respect to maintaining an active, continuing program for the economical and efficient management of agency records.

(b) Although many agencies regularly issue recordkeeping requirements for routine operations, many do not adequately specify such requirements for documenting policies and decisions, nor do they provide sufficient guidance on distinguishing between records and nonrecord materials, and maintaining records created or received on electronic mail systems.

(c) Since agency functions, activities, and administrative practices vary so widely, NARA cannot issue a comprehensive list of all categories of documentary materials appropriate for preservation by an agency as evidence of its activities or because of the information they contain. In all cases, the agency must consider the intent or circumstances of creation or receipt of the materials to determine whether their systematic maintenance shall be required.

[55 FR 27423, July 2, 1990, as amended at 60 FR 44640, Aug. 28, 1995]

§ 1222.32 General requirements.

Agencies shall identify, develop, issue, and periodically review their recordkeeping requirements for all agency operations and for records in all media, including those records created or received on electronic mail systems. Recordkeeping requirements shall:

(a) Identify and prescribe specific categories of documentary materials to be systematically created or received and maintained by agency personnel in the course of their official duties;

(b) Prescribe the use of materials and recording techniques that ensure the preservation of records as long as they are needed by the Government;

(c) Prescribe the manner in which these materials shall be maintained wherever held; and

(d) Distinguish records from nonrecord materials and, with the approval of the Archivist of the United States, prescribe action for the final

disposition of agency records when they are no longer needed for current business.

[55 FR 27423, July 2, 1990, as amended at 60 FR 44640, Aug. 28, 1995]

§ 1222.34 Identifying Federal records.

(a) *General*. To ensure that complete and accurate records are made and retained in the Federal Government, it is essential that agencies distinguish between records and nonrecord materials by the appropriate application of the definition of records (see 44 U.S.C. 3301 and 36 CFR 1220.14) to agency documentary materials. Applying the definition of records to most documentary materials created or received by agencies presents few problems when agencies have established and periodically updated recordkeeping requirements covering all media and all agency activities at all levels and locations.

(b) *Record status*. Documentary materials are records when they meet both of the following conditions:

(1) They are made or received by an agency of the United States Government under Federal law or in connection with the transaction of agency business; and

(2) They are preserved or are appropriate for preservation as evidence of agency organization and activities or because of the value of the information they contain.

(c) *Working files and similar materials*. Working files, such as preliminary drafts and rough notes, and other similar materials shall be maintained for purposes of adequate and proper documentation if:

(1) They were circulated or made available to employees, other than the creator, for official purposes such as approval, comment, action, recommendation, follow-up, or to communicate with agency staff about agency business; and

(2) They contain unique information, such as substantive annotations or comments included therein, that adds to a proper understanding of the agency's formulation and execution of basic policies, decisions, actions, or responsibilities.

(d) *Record status of copies*. The determination as to whether a particular document is a record does not depend upon whether it contains unique information. Multiple copies of the same document and documents containing duplicative information, including messages created or received on electronic mail systems, may each have record status depending on how they are used to transact agency business. See paragraph (f)(2) of this section concerning the nonrecord status of extra copies.

(e) *Electronic mail messages*. Messages created or received on electronic mail systems may meet the definition of record in 44 U.S.C. 3301.

(f) *Nonrecord materials*. Nonrecord materials are Government-owned documentary materials that do not meet the conditions of record status (see § 1222.34(b)) or that are specifically excluded from status as records by statute (see 44 U.S.C. 3301):

(1) Library and museum material (but only if such material is made or acquired and preserved solely for reference or exhibition purposes);

(2) Extra copies of documents (but only if the sole reason such copies are preserved is for convenience of reference); and

(3) Stocks of publications and of processed documents. (Each agency shall create and maintain serial or record sets of its publications and processed documents, as evidence of agency activities and for the information they contain, including annual reports, brochures, pamphlets, books, handbooks, posters and maps.)

(g) *Agency responsibilities*. Agencies shall take appropriate action to ensure that all staff are capable of identifying Federal records. For electronic mail systems, agencies shall ensure that all staff are informed of the potential record status of messages, transmittal and receipt data, directories, and distribution lists.

[55 FR 27423, July 2, 1990, as amended at 60 FR 44640, Aug. 28, 1995]

§ 1222.36 Identifying personal papers.

(a) Personal papers are documentary materials, or any reasonably segregable portion thereof, of a private or nonpublic character that do not relate to, or have an effect upon, the conduct of agency business. Personal papers are excluded from the definition of Federal

records and are not owned by the Government. Examples of personal papers include:

(1) Materials accumulated by an official before joining Government service that are not used subsequently in the transaction of Government business;

(2) Materials relating solely to an individual's private affairs, such as outside business pursuits, professional affiliations, or private political associations that do not relate to agency business; and

(3) Diaries, journals, personal correspondence, or other personal notes that are not prepared or used for, or circulated or communicated in the course of, transacting Government business.

(b) Personal papers shall be clearly designated as such and shall at all times be maintained separately from the office's records.

(c) If information about private matters and agency business appears in the same document, the document shall be copied at the time of receipt, with the personal information deleted, and treated as a Federal record.

(d) Materials labeled ''personal,'' ''confidential,'' or ''private,'' or similarly designated, and used in the transaction of public business, are Federal records subject to the provisions of pertinent laws and regulations. The use of a label such as ''personal'' is not sufficient to determine the status of documentary materials in a Federal office.

[55 FR 27423, July 2, 1990; 55 FR 28136, July 9, 1990; 55 FR 31982, Aug. 6, 1990]

§ 1222.38 Categories of documentary materials to be covered by recordkeeping requirements.

Agency recordkeeping requirements shall prescribe the creation and maintenance of records of the transaction of agency business that are sufficient to:

(a) Document the persons, places, things, or matters dealt with by the agency.

(b) Facilitate action by agency officials and their successors in office.

(c) Make possible a proper scrutiny by the Congress or other duly authorized agencies of the Government.

(d) Protect the financial, legal, and other rights of the Government and of persons directly affected by the Government's actions.

(e) Document the formulation and execution of basic policies and decisions and the taking of necessary actions, including all significant decisions and commitments reached orally (person to person, by telecommunications, or in conference).

(f) Document important board, committee, or staff meetings.

§ 1222.40 Removal of records.

Agencies shall develop procedures to ensure that departing officials do not remove Federal records from agency custody.

§ 1222.42 Removal of nonrecord materials.

(a) Nonrecord materials, including extra copies of agency records kept only for convenience of reference, may be removed from Government agencies only with the approval of the head of the agency or the individual authorized to act for the agency on matters pertaining to agency records.

(b) Agencies shall ensure that when nonrecord material containing classified information is removed from the executive branch, it is protected under conditions equivalent to those required of executive branch agencies. The originating agency or its successor in function retains control over access to such classified information, even after it is properly removed from the agency.

(c) Agencies shall ensure the appropriate protection of nonrecord material containing information which is restricted from release under the Privacy Act or other statutes, when such restricted nonrecord material is removed from Government agencies.

[56 FR 26336, June 7, 1991]

§ 1222.44 Directives documenting agency programs, policies, and procedures.

Agency recordkeeping requirements shall prescribe that the programs, policies, and procedures of the agency shall be adequately documented in appropriate directives. A record copy of each

such directive (including those superseded) shall be maintained by the appropriate agency directives management officer(s) as part of the official files.

§ 1222.46 Recordkeeping requirements of other agencies.

When statutes, regulations, directives or authoritative issuances of other agencies prescribe an agency's recordkeeping requirements, the agency so affected shall include these in appropriate directives or other authoritative issuances prescribing its organization, functions, or activities.

§ 1222.48 Data created or received and maintained for the Government by contractors.

(a) Contractors performing Congressionally-mandated program functions are likely to create or receive data necessary to provide adequate and proper documentation of these programs and to manage them effectively. Agencies shall specify the delivery of the Government of all data needed for the adequate and proper documentation of contractor-operated programs in accordance with requirements of the Federal Acquisition Regulation (FAR) and, where applicable, the Defense Federal Acquisition Regulation Supplement (DFARS).

(b) When contracts involve the creation of data for the Government's use, in addition to specifying a final product, agency officials may need to specify the delivery of background data that may have reuse value to the Government. Before specifying the background data that contractors must deliver to the agency, program and contracting officials shall consult with agency records and information managers and historians and, when appropriate, with other Government agencies to ensure that all agency and Government needs are met, especially when the data deliverables support a new agency mission or a new Government program.

(c) Deferred ordering and delivery-of-data clauses and rights-in-data clauses shall be included in contracts whenever necessary to ensure adequate and proper documentation or because the data have reuse value to the Government.

(d) When data deliverables include electronic records, the agency shall require the contractor to deliver sufficient technical documentation to permit the agency or other Government agencies to use the data.

(e) All data created for Government use and delivered to, or falling under the legal control of, the Government are Federal records and shall be managed in accordance with records management legislation as codified at 44 U.S.C. chapters 21, 29, 31, and 33, the Freedom of Information Act (5 U.S.C. 552), and the Privacy Act (5 U.S.C. 552a), and shall be scheduled for disposition in accordance with 36 CFR part 1228.

§ 1222.50 Records maintenance and storage.

(a) Agencies shall prescribe an appropriate records maintenance program so that complete records are filed or otherwise identified and preserved, records can be found when needed, the identification and retention of permanent records are facilitated, and permanent and temporary records are physically segregated or, for electronic records, segregable.

(b) Each Federal agency, in providing for effective controls over the maintenance of records, shall:

(1) Establish and implement standards and procedures for classifying, indexing, and filing records as set forth in GSA and NARA handbooks;

(2) Formally specify official file locations for records in all media and prohibit the maintenance of records at unauthorized locations;

(3) Formally specify which officials are responsible for maintenance and disposition of electronic records and which computer systems are used for recordkeeping;

(4) Standardize reference service procedures to facilitate the finding, charging out, and refiling of paper, audiovisual, and cartographic and architectural records, and to ensure that reference to electronic records minimizes the risk of unauthorized additions, deletions, or alterations;

(5) Make available to all agency employees published standards, guides, and instructions designed for easy reference and revision;

(6) Review its records maintenance program periodically to determine its adequacy; audit a representative sample of its paper, audiovisual, electronic, cartographic, and architectural files for duplication, misclassification, or misfiles;

(7) Maintain microform, audiovisual, and electronic records in accordance with 36 CFR parts 1230, 1232, and 1234, respectively;

(8) Establish and implement procedures for maintaining records and nonrecord materials separately; ensure that record materials generated electronically are clearly identified as records and protected from unauthorized change or deletion for the length of their scheduled retention period; and

(9) Establish and implement procedures for the separate maintenance of any personal papers in accordance with § 1222.36.

(c) Agencies must ensure that:

(1) Records in their legal custody sent for off-site storage are maintained in facilities that meet the standards specified in 36 CFR part 1228, subpart K;

(2) The information requirements specified at 36 CFR 1228.154 are met; and

(3) They remove their records from any records storage facility that does not correct nonconformances with the standards specified in 36 CFR part 1228, subpart K. (A facility is compliant if it does not have to meet the standard until a specific date in the future or compliance has been waived by NARA in accordance with 36 CFR 1228.238.) Agencies must initiate removal of the records from such a center within 6 months of initial discovery of the deficiencies by NARA or the agency and to complete removal of the records within 18 months after initial discovery of the deficiencies.

[55 FR 27423, July 2, 1990, as amended at 60 FR 44640, Aug. 28, 1995; 64 FR 67664, Dec. 2, 1999]

PART 1228—DISPOSITION OF FEDERAL RECORDS

Sec.

1228.1 Scope of part.

Subpart A—Records Disposition Programs

1228.10 Authority.
1228.12 Basic elements of disposition programs.

Subpart B—Scheduling Records

1228.20 Authorities.
1228.22 Developing records schedules.
1228.24 Formulation of agency records schedules.
1228.26 Request for records disposition authority.
1228.28 Scheduling pemanent records.
1228.30 Scheduling temporary records.
1228.32 Request to change disposition authority.

Subpart C—General Records Schedules

1228.40 Authority.
1228.42 Applicability.
1228.44 Current schedules.
1228.46 Availability.

Subpart D—Implementing Schedules

1228.50 Application of schedules.
1228.52 Withdrawal of disposal authority.
1228.54 Temporary extension of retention periods.
1228.56 Transfer of permanent records.
1228.58 Destruction of temporary records.
1228.60 Donation of temporary records.

Subpart E—Loan of Permanent and Unscheduled Records

1228.70 Authority.
1228.72 Approval.
1228.74 Agency action.
1228.76 NARA action on request.
1228.78 Retrieval of records.

Subpart F—Emergency Authorization to Destroy Records

1228.90 General provisions.
1228.92 Menaces to human life or health or to property.
1228.94 State of war or threatened war.

Subpart G—Damage to, Alienation, and Unauthorized Destruction of Records

1228.100 Responsibilities.
1228.102 Criminal penalties.
1228.104 Reporting.
1228.106 Exclusions.

Subpart H—Transfer of Records From the Custody of One Executive Agency to Another

1228.120 Authority.
1228.122 Approval.
1228.124 Agency request.

1228.126 Agency concurrences.
1228.128 Records of terminated agencies.
1228.130 Equipment.
1228.132 Costs of transfers.
1228.134 Restrictions on use of records.
1228.136 Exceptions.

Subpart I—Transfer of Records to Records Storage Facilities

1228.150 Where can a Federal agency transfer records for storage?
1228.152 Under what conditions may Federal records be stored in records storage facilities?
1228.154 What requirements must an agency meet when it transfers records to a records storage facility?
1228.156 What procedures must an agency follow to transfer records to an agency records center or commercial records storage facility?

Subpart J—Transfer, Use, and Disposition of Records in a NARA Records Center

1228.160 How does an agency transfer records to a NARA records center?
1228.162 How does an agency transfer vital records to a NARA records center?
1228.164 What records must be transferred to the National Personnel Records Center (NPRC)?
1228.166 How does an agency transfer records to the National Personnel Records Center (NPRC)?
1228.168 How can records be used in NARA records centers?
1228.170 How are disposal clearances managed for records in NARA records centers?

Subpart K—Facility Standards for Records Storage Facilities

GENERAL

1228.220 What authority applies to this subpart?
1228.222 What does this subpart cover?
1228.224 Publications incorporated by reference.
1228.226 Definitions.

FACILITY STANDARDS

1228.228 What are the facility requirements for all records storage facilities?
1228.230 What are the fire safety requirements that apply to records storage facilities?
1228.232 What are the requirements for environmental controls for records storage facilities?

HANDLING DEVIATIONS FROM NARA'S FACILITY STANDARDS

1228.234 What rules apply if there is a conflict between NARA standards and other regulatory standards that a facility must follow?
1228.236 How does an agency request a waiver from a requirement in this subpart?
1228.238 How does NARA process a waiver request?

FACILITY APPROVAL AND INSPECTION REQUIREMENTS

1228.240 How does an agency request authority to establish or relocate records storage facilities?
1228.242 What does an agency have to do to certify a fire-safety detection and suppression system?
1228.244 When may NARA conduct an inspection of a records storage facility?

Subpart L—Transfer of Records to the National Archives of the United States

1228.260 Authority.
1228.262 Types of records to be transferred.
1228.264 Certification for retention of records in agency custody.
1228.266 Audiovisual records.
1228.268 Cartographic and architectural records.
1228.270 Electronic records.
1228.272 Transfer of records to the National Archives of the United States.
1228.274 Restrictions on transferred records.
1228.276 Records subject to the Privacy Act of 1974.
1228.278 Release of equipment.
1228.280 Use of records transferred to the National Archives.
1228.282 Disposal clearances.

APPENDIX A TO PART 1228—MINIMUM SECURITY STANDARDS FOR LEVEL III FEDERAL FACILITIES

APPENDIX B TO PART 1228—ALTERNATIVE CERTIFIED FIRE-SAFETY DETECTION AND SUPPRESSION SYSTEMS(S)

AUTHORITY: 44 U.S.C. chs. 21, 29, and 33.

SOURCE: 45 FR 5705, Jan. 24, 1980. Redesignated at 50 FR 15723, Apr. 19, 1985, unless otherwise noted.

EDITORIAL NOTE: See Derivation Table appearing in the Finding Aids section of this volume.

§ 1228.1 Scope of part.

This part sets policies and establishes standards, procedures, and techniques for the disposition of all Federal records in accordance with 44 U.S.C. chapters 21, 29, 31, and 33. The disposition of documentary materials created

or acquired by a Federal agency, regardless of physical form or characteristics, is controlled by this part if any of the following conditions are met:

(a) The materials are created or received in the course of business and contain information related to the organization, functions, policies, decisions, procedures, operations, or other official activities of the agency. Also included is documentation of oral exchanges such as telephone conversations and meetings during which policy was discussed or formulated or other significant activities of the agency were planned, discussed, or transacted.

(b) The creation, retention, or disposition of the materials is mandated by statute or agency or other Federal regulations, directives, policies, or procedures.

(c) The materials are controlled, maintained, preserved, processed, filed, or otherwise handled following established agency procedures for records.

(d) The material contains unique information, such as substantive annotations, including drafts, transmittal sheets, and final documents or other materials circulated or made available to employees other than the creator for official purposes, such as approval, comment, action, recommendation, follow-up, or to keep agency staff informed regarding agency business.

(e) The material was created or received on an electronic mail system and it meets the definition of record. For specific instructions on the disposition of records created or received on electronic mail systems, see 36 CFR 1234.32.

[55 FR 27428, July 2, 1990, as amended at 60 FR 44640, Aug. 28, 1995]

Subpart A—Records Disposition Programs

§ 1228.10 Authority.

The head of each agency (in accordance with 44 U.S.C. 2904, 3102, and 3301) is required to establish and maintain a records disposition program to ensure efficient, prompt, and orderly reduction in the quantity of records and to provide for the proper maintenance of records designated as permanent by NARA.

[55 FR 27428, July 2, 1990]

§ 1228.12 Basic elements of disposition programs.

The primary steps in managing a records disposition program are given below. Details of each element are contained in the NARA records management handbook, Disposition of Federal Records (http://www.archives.gov/records_management/publications/disposition_of_federal_records/index.html).

(a) Issue a program directive assigning authorities and responsibilities for records disposition activities in the agency and keep that directive up to date.

(b) Develop, implement, and maintain an accurate, current, and comprehensive records schedule.

(c) Train all agency personnel taking part in the agency's records disposition activities.

(d) Publicize the program to make all agency employees aware of their records disposition responsibilities.

(e) Evaluate the results of the program to ensure adequacy, effectiveness, and efficiency.

[55 FR 27428, July 2, 1990, as amended at 66 FR 27027, May 16, 2001; 67 FR 43253, June 27, 2002]

Subpart B—Scheduling Records

SOURCE: 55 FR 27429, July 2, 1990, unless otherwise noted.

§ 1228.20 Authorities.

(a) The head of each agency shall direct the creation and preservation of records containing accurate and complete documentation of the organization, functions, policies, decisions, procedures, and essential transactions of the agency (44 U.S.C. 3101). The National Archives and Records Administration shall establish standards for the retention of those records having continuing value, and assist Federal agencies in applying the standards to records in their custody (44 U.S.C. 2905).

(b) No Federal records shall be destroyed or otherwise alienated from

the Government except in accordance with procedures described in this part 1228 (44 U.S.C. 3314).

§ 1228.22 Developing records schedules.

The primary steps in developing agency records schedules are given below. Details in each step are contained in the NARA records management handbook, Disposition of Federal Records (http://www.archives.gov/records_management/publications/disposition_of_federal_records/index.html). Ultimately, all records of an agency must be scheduled, but they need not all be scheduled at the same time. An agency may schedule the records of one function, program or organizational element at a time.

(a) Determine the functions and activities documented by the records to be scheduled.

(b) Prepare an inventory of the records including a description of their medium, location, volume, inclusive dates, informational content and use.

(c) Evaluate the period of time the agency needs each records series or system by reference to its uses and value to agency operations or legal obligations.

(d) Based on agency need, develop specific recommended retention and disposition instructions for each records series or each part of an automated information system, including file breaks, retention periods for temporary records, transfer periods for permanent records, and instructions for the transfer of records to an approved records storage facility when appropriate.

(e) Assemble into a draft schedule the descriptions and recommended disposition instructions for logical blocks of records, i.e., entire agency, organizational component, or functional area.

(f) Obtain approval of the records schedules from NARA (and from the General Accounting Office, when so required under title 8 of the GAO ''Policy and Procedures Manual for the Guidance of Federal Agencies'').

[45 FR 5705, Jan. 24, 1980. Redesignated at 50 FR 15723, Apr. 19, 1985, as amended at 64 FR 67665, Dec. 2, 1999; 66 FR 27027, May 16, 2001; 67 FR 43253, June 27, 2002]

§ 1228.24 Formulation of agency records schedules.

(a) *General.* Agency records schedules approved by the Archivist of the United States specify the disposition for agency records. Records of continuing (permanent) value will be scheduled for retention and immediate or eventual transfer to the legal custody of NARA. All other records will be scheduled for destruction or donation after a specific period of time based on administrative, fiscal, and legal values.

(b) *Characteristics of schedules.* Though records disposition authority may be requested from NARA on a program-by-program, function-by-function, or office-by-office basis, all agency records must be scheduled. Schedules must follow the guidelines provided below:

(1) Schedules shall identify and describe clearly each series or system and shall contain disposition instructions that can be readily applied. (Additional information is required for permanent records as specified in § 1228.28(b).) Schedules must be prepared so that each office will have standing instructions detailing the disposal, transfer, or retention of records.

(2) SF 115s shall include only new records not covered by the General Records Schedules (GRS) (see subpart C), deviations from the GRS (see § 1228.42), or previously scheduled records requiring changes in retention periods or substantive changes in description.

(3) All schedules shall take into account the physical organization of records or the filing system so that disposal or transfer can be handled in blocks.

(4) The disposition of nonrecord materials is controlled by instructions in the agency's printed or published records disposition manual. These instructions do not require NARA approval. Such items shall not be included on SF 115s. Non-record materials, such as extra copies of documents preserved solely for reference, and stocks of processed documents, and personal materials shall be maintained separately from official agency files to aid in records disposition.

(c) *Provisions of schedules.* Records schedules shall provide for:

(1) The destruction of records that have served their statutory, fiscal, or administrative uses and no longer have sufficient value to justify further retention. Procedures for obtaining disposal authorizations are prescribed in § 1228.30;

(2) The removal to a records storage facility of records not eligible for immediate destruction or other disposition but which are no longer needed in office space. These records are maintained by the records storage facility until they are eligible for final disposition action;

(3) The retention of the minimum volume of current records in office space consistent with effective and efficient operations; and

(4) The identification of records of permanent value in accordance with § 1228.28, and the establishment of cutoff periods and dates when such records will be transferred to the legal custody of NARA.

[45 FR 5705, Jan. 24, 1980. Redesignated at 50 FR 15723, Apr. 19, 1985, as amended at 64 FR 67665, Dec. 2, 1999]

§ 1228.26 Request for records disposition authority.

(a) *Submission*. Requests for records disposition authority shall be initiated by Federal agencies by submitting Standard Form 115, Request for Records Disposition Authority, to NARA (NWML). An SF 115 is used for requesting authority to schedule (or establish the disposition for) permanent and temporary records, either on a recurring or one-time basis.

(1) New Federal agencies shall apply General Records Schedules to eligible records and shall submit to NARA SF 115s covering all remaining records within 2 years of their establishment.

(2) Agencies shall submit to NARA schedules for the records of new programs and of programs that are reorganized or otherwise changed in a way that results in the creation of new or different records within 1 year of the implementation of the change.

(b) *Certification*. The signature of the authorized agency representative on the SF 115 shall constitute certification that the records recommended for disposal do not or will not have sufficient administrative, legal, or fiscal value to the agency to warrant retention beyond the expiration of the specified period and that records described as having permanent value will be transferred to the National Archives upon expiration of the stated period.

(c) *Disapproval of requests for disposition authority*. Requests for records disposition authority may be returned to the agency if the SF 115 is improperly prepared. The agency shall make the necessary corrections and resubmit the form to NARA (NWML). NARA may disapprove the disposition request for an item if, after appraisal of the records, NARA determines that the proposed disposition is not consistent with the value of the records. In such cases, NARA will notify the agency in writing.

[55 FR 27429, July 2, 1990; 55 FR 28136, July 9, 1990, as amended at 63 FR 35829, July 1, 1998]

§ 1228.28 Scheduling permanent records.

(a) *Initiation*. Federal agencies propose permanent retention of records in accordance with guidelines contained in the NARA records management handbook, Disposition of Federal Records (http://www.nara.gov/records/pubs/).

(b) *Requirements*. Each item proposed for permanent retention on an SF 115 shall include the following:

(1) Records series title used by agency personnel to identify the records;

(2) Complete description of the records including physical type and information contents;

(3) Inclusive dates;

(4) An arrangement statement;

(5) Statement of restrictions on access which NARA should impose in conformity with the Freedom of Information Act if the records are proposed for immediate transfer;

(6) An estimate of the volume of records accumulated annually if the records are current and continuing;

(7) The total volume to date; and

(8) Disposition instructions, developed using the following guidelines:

(i) If the records series or system is current and continuing, the SF 115 will include a disposition instruction specifying the period of time after which the records will be transferred to the National Archives, normally within 30

years for paper records, 5–10 years for audiovisual or microform records, and as soon as the records become inactive or the agency cannot meet the maintenance requirements found in § 1228.270 of this part for electronic records.

(ii) If the records series or system is nonrecurring, i.e., no additional records will be created or acquired, the agency may propose either immediate or future transfer to the National Archives.

(c) *Determination.* NARA will determine whether or not records are of permanent value and when the transfer of the permanent records will take place.

(1) If NARA determines that records are not permanent, it will notify the agency and negotiate an appropriate disposition. The disposition instruction on the SF 115 will be modified prior to NARA approval.

(2) If NARA determines that records are permanent, but that the transfer instructions are not appropriate, it will negotiate appropriate transfer terms with the agency. The disposition instruction on the SF 115 will be modified prior to NARA approval.

[55 FR 27429, July 2, 1990; 55 FR 31982, Aug. 6, 1990, as amended at 66 FR 27027, May 16, 2001]

§ 1228.30 Scheduling temporary records.

(a) *Initiation.* Federal agencies request authority to dispose of records, either immediately or on a recurring basis. Requests for immediate disposal are limited to records already in existence which no longer accumulate. For recurring records, approved schedules provide continuing authority to destroy the records. The retention periods approved by NARA are mandatory, and the agency shall dispose of the records after expiration of the retention period, except as provided in § 1228.54.

(b) *Requirements.* Each item on an SF 115 proposed for eventual destruction shall include the following:

(1) Records series title used by agency personnel to identify the records;

(2) Description of the records including physical type and informational content;

(3) If the records are contained in a Privacy Act system of records, a citation to the agency's alpha-numeric or numeric code designation for the system of records. If the system of records was added or deleted since the publication of the current Office of the Federal Register compilation of Privacy Act Issuances, the agency shall also cite the date and page of the FEDERAL REGISTER on which the new system notice appears or the deleted system is announced.

(4) Disposition instructions, developed using the following guidelines:

(i) If the records series or system is current and continuing, the SF 115 will include a disposition instruction specifying the period of time after which the records will be destroyed.

(ii) If the records series or system is nonrecurring, i.e., no additional records will be created or acquired, the agency may propose either immediate destruction or destruction on a future date.

(c) *Determination.* NARA may determine that records proposed as temporary merit permanent retention and transfer to the National Archives. In such cases, NARA arranges with the agency to change the disposition instruction prior to approval of the SF 115.

(d) *General Accounting Office concurrence.* Each Federal agency shall obtain the approval of the Comptroller General for the disposal of program records less than 3 years old and for certain classes of records relating to claims and demands by or against the Government, and to accounts in which the Government is concerned in accordance with the GAO ''Policy and Procedures Manual for Guidance of Federal Agencies,'' title 8—Records Management (44 U.S.C. 3309). This approval must be obtained before the approval of the disposal request by NARA, but the request may be submitted concurrently to GAO and NARA.

(e) *Withdrawn items.* Agencies may request that items listed on the SF 115 be withdrawn in order to aid in NARA's processing (appraisal) of the remaining items on the schedule.

(1) If, during the course of the appraisal process, NARA determines that records described by an item(s) on the proposed schedule do not exist or are not arranged as stated on the SF 115,

NARA may request the agency to withdraw the item(s) from consideration, if the agency is unable to offer sufficient clarification.

(2) If NARA and the agency cannot agree on the retention period for an item(s), the items(s) may be withdrawn. In these cases, the agency will submit an SF 115 with a revised proposal for disposition within 6 months of the date of the approval of the original SF 115.

[55 FR 27429, July 2, 1990, as amended at 57 FR 22432, May 28, 1992]

§ 1228.32 Request to change disposition authority.

(a) Agencies desiring to change the approved retention period of a series or system of records shall submit an SF 115. Disposition authorities contained in an approved SF 115 are automatically superseded by approval of a later SF 115 applicable to the same records unless the later SF 115 specified an effective date. Agencies submitting revised schedules shall indicate on the SF 115 the relevant schedule and item numbers to be superseded, the citation to the current printed records disposition schedule, if any, and/or the General Records Schedules and item numbers that cover the records.

(b) Agencies proposing to change the retention period of a series or system of records shall submit with the SF 115 an explanation and justification for the change. The need to retain records longer than the retention period specified in the disposition instructions on an approved SF 115 for purposes of audit, court order, investigation, litigation, study, or any other administrative purpose that justifies the temporary extension of the retention period shall be governed by the procedures set forth in § 1228.54. Agencies shall not submit an SF 115 to change the retention period in such cases.

(c) Agencies must secure NARA approval before changing the provision in a disposition instruction that specifies the period of time that permanent records will remain in agency legal custody prior to transfer to the National Archives of the United States.

[61 FR 19554, May 2, 1996; 61 FR 24702, May 16, 1996, as amended at 64 FR 67665, Dec. 2, 1999]

Subpart C—General Records Schedules

SOURCE: 55 FR 27430, July 2, 1990, unless otherwise noted.

§ 1228.40 Authority.

The Archivist of the United States issues schedules authorizing disposal, after specified periods of time, of temporary records common to several or all agencies of the U.S. Government. General Records Schedules authorize the destruction of records after the stated retention period expires. Application of the disposition instructions in these schedules is mandatory (44 U.S.C. 3303a), provided an agency has not already received disposition authority from NARA.

[67 FR 31962, May 13, 2002]

§ 1228.42 Applicability.

(a) Agencies must apply GRS authorizations except as provided in paragraphs (b) or (c) of this section. Agencies must not include on SFs 115 records covered by the GRS unless a different retention period is requested, as specified in paragraph (c) of this section.

(b) Agencies may apply either the disposition instructions in a new or revised GRS or the disposition instructions previously approved by NARA in an agency schedule for the same series or system of records, unless NARA indicates that the new GRS disposition instruction must be applied without exception. The authority chosen by the agency must be applied on an agency-wide basis. The agency must notify NARA within 90 days of the date of the GRS change if it intends to continue using the agency schedule.

(c) Except as provided in paragraph (b) of this section, agencies that wish a different retention period must request an exception to the GRS by submitting an SF 115 in accordance with § 1228.30 accompanied by a written justification for the different retention period.

(d) Provisions of the General Records Schedules may be applied to records in the custody of the National Archives at

NARA's discretion subject to the provisions of § 1228.200.

[55 FR 27430, July 2, 1990, as amended at 67 FR 31962, May 13, 2002]

§ 1228.44 Current schedules.

The following General Records Schedules governing the disposition of records common to several or all agencies were developed by the National Archives and Records Administration after consultation with other appropriate agencies. They have been approved by the Archivist of the United States.

SCHEDULE NUMBER AND TYPE OF RECORDS GOVERNED

1. Civilian Personnel Records.
2. Payrolling and Pay Administration Records.
3. Procurement, Supply and Grant Records.
4. Property Disposal Records.
5. Budget Preparation, Presentation, and Apportionment Records.
6. Accountable Officers' Accounts Records.
7. Expenditure Accounting Records.
8. Stores, Plant, and Cost Accounting Records.
9. Travel and Transportation Records.
10. Motor Vehicle Maintenance and Operation Records.
11. Space and Maintenance Records.
12. Communications Records.
13. Printing, Binding, Duplication, and Distribution Records.
14. Information Services Records.
15. Housing Records.
16. Administrative Management Records.
17. Cartographic, Aerial Photographic, Architectural, and Engineering Records.
18. Security and Protective Services Records.
19. RESERVED.
20. Electronic Records.
21. Audiovisual Records.
22. Inspector General Records (WITHDRAWN).
23. Records Common to Most Offices Within Agencies.

[55 FR 27430, July 2, 1990, as amended at 66 FR 27027, May 16, 2001]

§ 1228.46 Availability.

The GRS and instructions for their use are available from NARA (NWM). The Archivist of the United States distributes new schedules and schedule revisions under sequentially numbered GRS transmittals.

[55 FR 27430, July 2, 1990, as amended at 63 FR 35829, July 1, 1998]

Subpart D—Implementing Schedules

SOURCE: 55 FR 27431, July 2, 1990, unless otherwise noted.

§ 1228.50 Application of schedules.

The application of approved schedules is mandatory (44 U.S.C. 3303a). The Archivist of the United States will determine whether or not records may be destroyed or transferred to the National Archives. If the Archivist approves the request for disposition authority, NARA will notify the agency by returning one copy of the completed SF 115. This shall constitute mandatory authority for the final disposition of the records (for withdrawal of disposal authority or the extension of retention periods, see §§ 1228.52 and 1228.54). The authorized destruction shall be accomplished as prescribed in § 1228.58. The head of each Federal agency shall direct the application of records schedules to ensure the agency maintains recorded information necessary to conduct Government business, avoid waste, and preserve permanent records for transfer to the National Archives. The agency head shall take the following steps to ensure proper dissemination and application of approved schedules:

(a) Issue an agency directive incorporating the disposition authorities approved by NARA, i.e., SF 115s (except for one-time authorities covering nonrecurring records) and the General Records Schedules. Also include nonrecord materials with disposition instructions developed by the agency. Once all records and nonrecord materials are included, this document is the agency's comprehensive schedule. Agencies may also issue other directives containing instructions relating to agency records disposition procedures.

(1) Published schedules contain disposition authorities granted by NARA for records that the agency continues to create. They include general instructions for transfer of records to a records storage facility, transfer of records to the National Archives of the United States, and other retention and disposition procedures. They do not include nonrecurring records for which

NARA has granted authority for immediate disposal or transfer to the National Archives of the United States.

(2) Comprehensive schedules are formally published manuals or directives that provide for the disposition of all recurring records and nonrecord materials created by an agency. These schedules must cite the GRS or SF 115 and item numbers that provide the legal disposition authority for items covering record material.

(3) Prior to issuance, agencies may consult with NARA concerning directives or other issuances containing approved schedules, instructions for use of NARA records centers, transfer of records to the National Archives of the United States, or other matters covered by NARA procedures or regulations.

(4) Agencies must submit to the National Archives and Records Administration (NWML) copies of published records schedules and all directives and other issuances relating to records disposition, within 30 days of implementation or internal dissemination, as specified below. If an agency both prints copies for distribution and posts an electronic copy, it should follow the instructions in paragraph (a)(4)(ii) of this section.

(i) Agencies that print these materials for internal distribution must forward to NARA (NWML), 8601 Adelphi Rd., College Park, MD 20740–6001, three copies of each final directive or other issuance relating to records disposition and 20 copies of all published records schedules (printed agency manuals) and changes to all manuals as they are issued.

(ii) Agencies that make these materials available via the Internet or internally on an Intranet web site or by other electronic means must submit one printed or electronic copy, in a format specified by NARA, to NARA (NWML) when the directive or manual is posted or distributed. Electronic mail messages transmitting copies of agency schedules as electronic attachments may be sent to *records.mgt@nara.gov*. These submissions must specify the name, title, agency, address, and telephone number of the submitter. If the records schedule is posted on a publicly available web site, the agency must also provide the Internet address (URL).

(b) Establish internal training programs to acquaint appropriate personnel with the requirements and procedures of the records disposition program.

(c) Apply the approved records disposition schedules to the agency's records.

(1) Records described by items marked ''disposition not approved'' or ''withdrawn'' may not be destroyed until a specific disposition has been approved by NARA.

(2) Disposition authorities for items on approved SF 115s that specify an organizational component of the department or independent agency as the creator or custodian of the records may be applied to the same records after internal reorganization, but only if the nature, content, and functional importance of the records remain the same. Authority approved for items described in a functional format may be applied to any organizational component within the department or independent agency that is responsible for the relevant function.

(3) Disposition authorities approved for one department or independent agency may not be applied by another. Departments or agencies that acquire records from another department or agency, and/or continue creating the same series of records previously created by another department or agency through interagency reorganization must submit an SF 115 to NARA for disposition authorization for the records within one year of the reorganization.

(4) Unless otherwise specified, disposition authorities apply retroactively to all existing records as described in the schedule, including records acquired by transfer of function within or between agencies, as long as the nature, content, and functional importance of the records series is unchanged.

(d) Review approved schedules, and, if necessary, update them annually. Additions and changes to the GRS shall be incorporated or otherwise disseminated

within 6 months of issuance from NARA.

[55 FR 27431, July 2, 1990, as amended at 63 FR 35829, July 1, 1998; 64 FR 67665, Dec. 2, 1999; 67 FR 31963, May 13, 2002]

§ 1228.52 Withdrawal of disposal authority.

In an emergency or in the interest of efficiency of Government operations, NARA will withdraw disposal authorizations in approved disposal schedules (44 U.S.C. 2909). This withdrawal may apply to particular items on schedules submitted by agencies or may apply to all existing authorizations for the disposal of a specified type of record obtained by any or all agencies of the Government. If the withdrawal is applicable to only one agency, that agency will be notified of this action by letter signed by the Archivist; if applicable to more than one agency, notification may be by NARA bulletin issued and signed by the Archivist.

§ 1228.54 Temporary extension of retention periods.

(a) Approved agency records schedules and the General Records Schedules are mandatory (44 U.S.C. 3303a). Records series or systems eligible for destruction must not be maintained longer without the prior written approval of the National Archives and Records Administration (NWML) except when:

(1) The agency has requested a change in the retention period for the records series or system in accordance with § 1228.32; or

(2) Records are needed for up to one year beyond the date they are eligible for disposal. When such records are in a records storage facility, the agency must notify the facility of the need for continued retention of the records.

(b) Upon submission of adequate justification, NARA may authorize a Federal agency to extend the retention period of a series or system of records (44 U.S.C. 2909). These extensions of retention periods will be granted for records which are required to conduct Government operations because of special circumstances which alter the normal administrative, legal, or fiscal value of the records.

(c) The head of a Federal agency may request approval of a temporary extension of a retention period by sending a letter to NARA (NWML), 8601 Adelphi Rd., College Park, MD 20740–6001. The request shall include:

(1) A concise description of the records series for which the extension is requested.

(2) A complete citation of the specific provisions of the agency records schedule or the General Records Schedule currently governing disposition of the records;

(3) A statement of the estimated period of time that the records will be required; and

(4) A statement of the current and proposed physical location of the records.

(d) Approval of a request for extension of retention periods may apply to records in the custody of one Federal agency or records common to several or all Federal agencies. If approval of a request is applicable to records in the custody of one agency, that agency will be notified by letter. If approval is applicable to records common to several agencies, notification may be made by NARA bulletin.

(e) Agencies must ensure that affected records storage facilities are notified when NARA approves an extension of the retention period beyond the period authorized in the records control schedule. Agencies must forward to NARA (NWML) two copies of all formally issued instructions which extend the retention periods.

(f) Upon expiration of an approved extension of retention period, NARA will notify all affected agencies to apply normal retention requirements.

[55 FR 27431, July 2, 1990, as amended at 61 FR 19554, May 2, 1996; 61 FR 24702, May 16, 1996; 63 FR 35829, July 1, 1998; 64 FR 67665, Dec. 2, 1999]

§ 1228.56 Transfer of permanent records.

All records scheduled as permanent shall be transferred to the National Archives after the period specified on the SF 115 in accordance with procedures specified under subpart J.

§ 1228.58 Destruction of temporary records.

(a) *Authority*. Federal agencies are required to follow regulations issued by the Archivist of the United States governing the methods of destroying records (44 U.S.C. 3302). Only the methods described in this section shall be used.

(b) *Sale or salvage*. Paper records to be disposed of normally must be sold as wastepaper. If the records are restricted because they are national security classified or exempted from disclosure by statute, including the Privacy Act, or regulation, the wastepaper contractor must be required to pulp, macerate, shred, or otherwise definitively destroy the information contained in the records, and their destruction must be witnessed either by a Federal employee or, if authorized by the agency that created the records, by a contractor employee. The contract for sale must prohibit the resale of all other paper records for use as records or documents. Records other than paper records (audio, visual, and data tapes, disks, and diskettes) may be salvaged and sold in the same manner and under the same conditions as paper records. All sales must be in accordance with the established procedures for the sale of surplus personal property. (See 41 CFR part 101–45, Sale, Abandonment, or Destruction of Personal Property.)

(c) *Destruction*. If the records cannot be sold advantageously or otherwise salvaged, the records may be destroyed by burning, pulping, shredding, macerating, or other suitable means.

§ 1228.60 Donation of temporary records.

(a) When the public interest will be served, a Federal agency may propose the transfer of records eligible for disposal to an appropriate person, organization, institution, corporation, or government (including a foreign government) that has requested them. Records will not be transferred without prior written approval of NARA.

(b) The head of a Federal agency shall request the approval of such a transfer by sending a letter to NARA (NWML), 8601 Adelphi Rd., College Park, MD 20740–6001. The request shall include:

(1) The name of the department or agency, and subdivisions thereof, having custody of the records;

(2) The name and address of the proposed recipient of the records;

(3) A list containing:

(i) An identification by series or system of the records to be transferred,

(ii) The inclusive dates of the records,

(iii) The NARA disposition of job (SF 115) or GRS and item numbers that authorize disposal of the records;

(4) A statement providing evidence:

(i) That the proposed transfer is in the best interests of the Government,

(ii) That the proposed recipient agrees not to sell the records as records or documents, and

(iii) That the transfer will be made without cost to the U.S. Government;

(5) A certification that:

(i) The records contain no information the disclosure of which is prohibited by law or contrary to the public interest, and/or

(ii) That records proposed for transfer to a person or commercial business are directly pertinent to the custody or operations of properties acquired from the Government, and/or

(iii) That a foreign government desiring the records has an official interest in them.

(c) NARA will consider such request and determine whether the donation is in the public interest. Upon approval NARA will notify the requesting agency in writing. If NARA determines such a proposed donation is contrary to the public interest, the request will be denied and the agency will be notified that the records must be destroyed in accordance with the appropriate disposal authority.

[55 FR 27431, July 2, 1990, as amended at 63 FR 35829, July 1, 1998]

Subpart E—Loan of Permanent and Unscheduled Records

SOURCE: 55 FR 27433, July 2, 1990, unless otherwise noted.

§ 1228.70 Authority.

The Archivist of the United States has authority over the placement of permanent records (44 U.S.C. 2107 and 2904). As unscheduled records have not been appraised, they will be deemed permanent for the purposes of this section and are also covered by this authority.

§ 1228.72 Approval.

No permanent or unscheduled records shall be loaned to non-Federal recipients without prior written approval from NARA. This authorization is not required for temporary loan of permanent and unscheduled records between Federal agencies.

§ 1228.74 Agency action.

(a) An agency proposing to loan permanent or unscheduled records shall execute a written loan agreement with the proposed recipient. The agreement shall include:

(1) The name of the department or agency and subdivisions thereof having custody of the records;

(2) The name and address of the proposed recipient of the records;

(3) A list containing:

(i) An identification by series or system of the records to be loaned,

(ii) The inclusive dates for each series,

(iii) The volume and media of the records to be loaned, and

(iv) The NARA disposition job (SF 115) and item numbers covering the records, if any;

(4) A statement of the purpose and duration of the loan;

(5) A statement specifying any restrictions on the use of the records and how these restrictions will be administered by the donee; and

(6) A certification that the records will be stored according to the environmental specifications for archival records.

(b) The Archivist of the United States shall be a signatory on all loan agreements for permanent and unscheduled records. An agreement may not be implemented until the Archivist has signed.

(c) The head of the Federal agency shall request approval for the loan by sending a letter to NARA (NWML), 8601 Adelphi Rd., College Park, MD 20740–6001, transmitting the proposed loan agreement and specifying the name, title, and telephone number of the person NARA should contact about the proposed loan.

[57 FR 22432, May 28, 1992, as amended at 63 FR 35829, July 1, 1998]

§ 1228.76 NARA action on request.

NARA will review the request and, if found acceptable, return the approved agreement to the agency. NARA will deny the request if the records should be transferred to the National Archives in accordance with subpart J of this part or if the loan would endanger the records or otherwise contravene the regulations in 36 CFR chapter XII, subchapter B. If NARA disapproves the loan, the Archivist will notify the agency in writing and provide instructions for the disposition of the records.

[57 FR 22432, May 28, 1992; 57 FR 24308, June 8, 1992]

§ 1228.78 Retrieval of records.

An agency shall contact the recipient of the loan of permanent or unscheduled records 30 days prior to the expiration of the loan period (as stated in the loan agreement) to arrange for the return of the records. If the agency extends the duration of the loan, it shall notify NARA (NWML) in writing, specifying the reason for the extension and providing a new time limit for the loan.

[57 FR 22432, May 28, 1992, as amended at 63 FR 35829, July 1, 1998]

Subpart F—Emergency Authorization to Destroy Records

§ 1228.90 General provisions.

Under certain conditions, records may be destroyed without regard to the provisions of subpart D.

[45 FR 5705, Jan. 24, 1980. Redesignated at 50 FR 15723, Apr. 19, 1985, and 55 FR 27433, July 2, 1990]

§ 1228.92 Menaces to human life or health or to property.

(a) Agencies may destroy records that constitute a continuing menace to human health or life or to property (44

U.S.C. 3310). When such records are identified, the agency head shall notify NARA (NWML), specifying the nature of the records, their location and quantity, and the nature of the menace. If NARA concurs in the determination, the Archivist will direct the immediate destruction of the records or other appropriate means of destroying the recorded information. However, if the records are still or motion picture film on nitrocellulose base that has deteriorated to the extent described in paragraph (b) of this section, the head of the agency may follow the procedure therein provided.

(b) Whenever any radarscope, aerial, or other still or motion picture film on nitrocellulose base has deteriorated to the extent that it is soft and sticky, is emitting a noxious order, contains gas bubbles, or has retrograded into acrid powder, and the head of the agency having custody of it shall determine that it constitutes a menace to human health or life or to property, then the agency shall without prior authorization of the Archivist:

(1) Arrange for its destruction in a manner that will salvage its silver content if the silver content is of sufficient quantity and market value per troy ounce to warrant such salvage;

(2) Authorize burial in approved landfills, in the event the quantity is not sufficiently large to justify the salvaging of its silver content; or

(3) Effect other appropriate methods in the event that the methods provided in paragraph (b)(1) or (2) of this section are not feasible.

(c) These films should be removed from inhabited buildings as soon as possible.

(d) Within 30 days after the destruction of the film as provided in this section, the head of the agency who directed its destruction shall submit a written statement to NARA (NWML), 8601 Adelphi Rd., College Park, MD 20740–6001, describing the film and showing when, where, and how the destruction was accomplished.

(e) This report has been cleared in accordance with GSA regulations in Title 41 of the CFR and assigned Interagency Report Control Number 1095–NAR–AR.

[45 FR 5705, Jan. 24, 1980. Redesignated and amended at 50 FR 15723, 15725, Apr. 19, 1985; 51 FR 23538, June 30, 1986. Redesignated and amended at 55 FR 27433, July 2, 1990; 63 FR 35829, July 1, 1998; 66 FR 27027, May 16, 2001]

§ 1228.94 State of war or threatened war.

(a) Destruction of records outside the territorial limits of the continental United States is authorized whenever, during a state of war between the United States and any other nation or when hostile action by a foreign power appears imminent, the head of the agency that has custody of the records determines that their retention would be prejudicial to the interest of the United States, or that they occupy space urgently needed for military purposes and are without sufficient administrative, legal, research, or other value to warrant their continued preservation (44 U.S.C. 3311).

(b) Within 6 months after the destruction of any records under this authorization, a written statement describing the character of the records and showing when and where the disposal was accomplished shall be submitted to NARA (NWML) by the agency official who directed the disposal.

[55 FR 27433, July 2, 1990, as amended at 63 FR 35829, July 1, 1998]

Subpart G—Damage to, Alienation, and Unauthorized Destruction of Records

§ 1228.100 Responsibilities.

(a) The Archivist of the United States and heads of Federal agencies are responsible for preventing the alienation or unauthorized destruction of records, including all forms of mutilation. Records may not be removed from the legal custody of Federal agencies or destroyed without regard to the provisions of agency records schedules (SF 115 approved by NARA or the General Records issued by NARA).

(b) The heads of Federal agencies are responsible for ensuring that all employees are aware of the provisions of

the law relating to unauthorized destruction, alienation, or mutilation of records, and should direct that any such action be reported to them.

[55 FR 27433, July 2, 1990, as amended at 64 FR 67665, Dec. 2, 1999]

§ 1228.102 Criminal penalties.

The maximum penalty for the willful and unlawful destruction, damage, or alienation of Federal records is a $2,000 fine, 3 years in prison, or both (18 U.S.C. 2071).

[55 FR 27434, July 2, 1990]

§ 1228.104 Reporting.

(a) The head of a Federal agency shall report any unlawful or accidental destruction, defacing, alteration, or removal of records in the custody of that agency to NARA (NWML), 8601 Adelphi Rd., College Park, MD 20740–6001. The report shall include:

(1) A complete description of the records with volume and dates if known;

(2) The office of origin;

(3) A statement of the exact circumstances surrounding the alienation, defacing, or destruction of the records;

(4) A statement of the safeguards established to prevent further loss of documentation; and

(5) When appropriate, details of the actions taken to salvage, retrieve, or reconstruct the records.

(b) This report has been cleared in accordance with GSA regulations in Title 41 of the CFR and assigned Interagency Report Control Number 0285–NAR–AR.

(c) The Archivist of the United States will assist the head of the agency in contacting the Attorney General for the recovery of any unlawfully removed records.

[45 FR 5705, Jan. 24, 1980, as amended at 46 FR 60205, Dec. 9, 1981. Redesignated and amended at 50 FR 15723, 15725, Apr. 19, 1985; 51 FR 23538, June 30, 1986. Redesignated and amended at 55 FR 27434, July 2, 1990; 63 FR 35829, July 1, 1998; 66 FR 27027, May 16, 2001]

§ 1228.106 Exclusions.

Private or personal files are not governed by these provisions. 36 CFR 1222.36 provides the legal definition of personal papers and prescribes standards for their maintenance.

[45 FR 5705, Jan. 24, 1980. Redesignated and amended at 50 FR 15723, 15725, Apr. 19, 1985. Further redesignated at 55 FR 27433, July 2, 1990; 66 FR 27027, May 16, 2001]

Subpart H—Transfer of Records from the Custody of One Executive Agency to Another

SOURCE: 45 FR 5705, Jan. 24, 1980, unless otherwise noted. Redesignated at 50 FR 15723, Apr. 19, 1985, and 55 FR 27433, July 2, 1990.

§ 1228.120 Authority.

The Archivist of the United States will issue regulations governing the transfer of records from the custody of one executive agency to another (44 U.S.C. 2908).

§ 1228.122 Approval.

No records shall be transferred from the custody of one executive agency to another without the prior written approval of the National Archives and Records Administration except as provided in § 1228.136.

§ 1228.124 Agency request.

The head of any executive agency may request the transfer of records to or from his or her agency. Approval shall be requested by letter addressed to the NARA (NWML), in which are included:

(a) A concise description of the records to be transferred, including the volume in cubic feet;

(b) A statement of the restrictions imposed on the use of records;

(c) A statement of the agencies and persons using the records and the purpose of this use;

(d) A statement of the current and proposed physical and organizational locations of the records; and

(e) A justification for the transfer including an explanation of why it is in the best interests of the Government.

[45 FR 5705, Jan. 24, 1980. Redesignated at 50 FR 15723, Apr. 19, 1985, and amended at 50 FR 26934, June 28, 1985. Redesignated and amended at 55 FR 27434, July 2, 1990; 63 FR 35829, July 1, 1998]

§ 1228.126 Agency concurrences.

Copies of the concurrence or nonconcurrence in the transfer by the heads of any agencies concerned shall be attached to the agency request.

§ 1228.128 Records of terminated agencies.

Transfers of records of executive agencies whose functions are terminated or are in process of liquidation are expressly subject to this part 1228 and no such transfers shall be made except in accordance with its provisions.

§ 1228.130 Equipment.

Records storage equipment shall be transferred with the records contained therein in accordance with arrangements previously agreed to by the agencies concerned.

§ 1228.132 Costs of transfers.

Approved transfers shall be made without reimbursement to the agency of original custody for any cost involved, except when this reimbursement is previously agreed to by the agencies concerned.

§ 1228.134 Restrictions on use of records.

Whenever any records that are transferred are subject to restrictions upon their use imposed under a statute, Executive order, or agency determination, these restrictions shall continue in effect after the transfer. Restrictions imposed by agency determination may be removed by agreement between the agencies concerned.

§ 1228.136 Exceptions.

Prior written approval of NARA is not required when:

(a) Records are transferred to Federal records centers or the National Archives in accordance with subparts I and J.

(b) Records are loaned for official use.

(c) The transfer of records or functions or both is required by statute, Executive Order, Presidential reorganization plan, or Treaty, or by specific determinations made thereunder.

(d) The records are transferred between two components of the same Executive department.

(e) Records accessioned by the National Archives, later found to lack sufficient value for continued retention by the National Archives are governed exclusively for further disposition in accordance with § 1228.200.

[55 FR 27434, July 2, 1990]

Subpart I—Transfer of Records to Records Storage Facilities

SOURCE: 64 FR 67665, Dec. 2, 1999, unless otherwise noted.

§ 1228.150 Where can a Federal agency transfer records for storage?

Federal agencies may store records in the following types of records storage facilities, so long as the facilities meet the facility standards in subpart K of this part. Records transferred to a records storage facility remain in the legal custody of the agency.

(a) NARA records centers. NARA owns or operates records centers for the storage, processing, and servicing of records for Federal agencies under the authority of 44 U.S.C. 2907. These NARA records centers include a National Personnel Records Center which contains designated records of the Department of Defense and the Office of Personnel Management and other designated records pertaining to former Federal civilian employees. A list of NARA records centers is available from the NARA web site at *http://www.archives.gov/facilities/index.html* and also in the U.S. Government Manual, which is for sale from the Superintendent of Documents, U.S. Government Printing Office, Mail Stop: SSOP, Washington, DC 20402–9328, and is available on the Internet from *http://www.access.gpo.gov/nara*.

(b) Records centers operated by or on behalf of one or more Federal agencies other than NARA.

(c) Commercial records storage facilities operated by private entities.

[64 FR 67665, Dec. 2, 1999, as amended at 67 FR 43253, June 27, 2002]

§ 1228.152 Under what conditions may Federal records be stored in records storage facilities?

The following chart shows what records can be stored in a records storage facility and the conditions that apply:

Type of Record	Conditions
(1) Permanent records	(i) Any storage facility that meets the provisions of subpart K of this part.
(2) Unscheduled records	(i) Any storage facility that meets the provisions of subpart K of this part. (ii) Also requires submission of SF 115 and its acceptance from NARA under the provisions of subpart B of this part.
(3) Temporary records (excluding Civilian Personnel Records).	(i) Any storage facility that meets the provisions of subpart K of this part.
(4) Vital records	(i) Storage facility must meet the provisions of subpart K of this part and 36 CFR part 1236.
(5) Civilian Personnel Records	(i) May only be transferred to NPRC, St. Louis as required by this part.

§ 1228.154 What requirements must an agency meet when it transfers records to a records storage facility?

An agency must meet the following requirements when it transfers records to a records storage facility:

(a) Ensure that the requirements of subpart K of this part are met. Special attention must be paid to ensuring appropriate storage conditions for records on non-paper based media (e.g., film, audio tape, magnetic tape), especially those that are scheduled for long-term or permanent retention, as those records typically require more stringent environmental controls (see 36 CFR parts 1230 through 1234).

(b) To transfer unscheduled records, submit an SF 115 to NARA (NWML) prior to the transfer. The agency may transfer the records only after NARA has determined that the SF 115 meets the requirements specified in this part.

(c) Create documentation sufficient to identify and locate files.

(1) Such documentation must include for each individual records series spanning one or more consecutive years transferred to storage:

(i) Creating office;

(ii) Series title;

(iii) Description (in the case of permanent or unscheduled records, the description must include a folder title list of the box contents or equivalent detailed records description);

(iv) Date span;

(v) Physical form and medium of records (e.g., paper, motion picture film, sound recordings, photographs or digital images);

(vi) Volume;

(vii) Citation to NARA-approved schedule or agency records disposition manual (unscheduled records must cite the date the SF 115 was submitted to NARA);

(viii) Restrictions on access if applicable;

(ix) Disposition (''permanent,'' ''temporary,'' or ''unscheduled; SF 115 pending'');

(x) Date of disposition action (transfer to the National Archives of the United States or destruction);

(xi) Physical location, including name and address of facility; and

(xii) Control number or identifier used to track records.

(2) In the case of permanent and unscheduled records, provide copies of such documentation to NARA and advise NARA in writing of the new location whenever the records are moved to a new storage facility.

(d) Ensure that NARA-approved retention periods are implemented properly and that records documenting final disposition actions (destruction or transfer to the National Archives of the United States) are created and maintained as required by 36 CFR 1220.36.

(1) Retain temporary records until the expiration of their NARA-approved retention period and no longer, except as provided for in § 1228.54.

(2) Transfer permanent records to the National Archives of the United States in accordance with § 1228.260.

(e) Provide access to appropriate NARA staff to records wherever they are located in order to conduct an evaluation in accordance with 36 CFR 1220.50 or to process a request for records disposition authority.

(f) Move temporary records that are subsequently reappraised as permanent to a facility that meets the environmental control requirements for permanent records in § 1228.232 within one year of their re-appraisal, if not already in such a facility. (Paper-based permanent records in an existing records storage facility that does not meet the environmental control requirements in § 1228.232(b) on October 1, 2009, must be moved from that facility no later than February 28, 2010.)

§ 1228.156 What procedures must an agency follow to transfer records to an agency records center or commercial records storage facility?

Federal agencies must use the following procedures to transfer records to an agency records center or commercial records storage facility:

(a) Agreements with agency records centers or contracts with commercial records storage facilities must incorporate the standards in subpart K of this part and allow for inspections by the agency and NARA to ensure compliance. An agency must remove records promptly from a facility if deficiencies identified during an inspection are not corrected within six months.

(b) For temporary records, the agency must make available to NARA on request the documentation specified in § 1228.154. For permanent records, the agency must transmit this documentation to NARA (NWML) no later than 30 days after records are transferred to the agency records center or commercial records storage facility. For unscheduled records, the agency must transmit the information to NWML with the SF 115 before the records are transferred as required by § 1228.154(b).

(c) Agencies must establish procedures that ensure that temporary records are destroyed in accordance with NARA-approved schedules and that NARA-approved changes to schedules, including the General Records Schedules, are applied to records in agency records centers or commercial records storage facilities in a timely fashion. Procedures must include a requirement that the agency records center or commercial records storage facility notify agency records managers or the creating office prior to the disposal of temporary records unless disposal of temporary records is initiated by the agency.

(d) Agencies must establish procedures to ensure that the agency records centers or commercial records storage facilities transfer permanent records to the National Archives of the United States as individual series spanning one or more years and in accordance with the provisions of § 1228.272.

(e) Agencies must ensure that records that are restricted because they are security classified or exempt from disclosure by statute, including the Privacy Act (5 U.S.C. 552a), or regulation are stored and maintained in accordance with applicable laws, executive orders, or regulations.

(f) Agencies must ensure that disposable records, including restricted records (security classified or exempted from disclosure by statute, including the Privacy Act, or regulation), are destroyed in accordance with the requirements specified in § 1228.58.

(g) Agencies must ensure that emergency operating vital records, as defined in 36 CFR 1236.14, that are transferred to an agency records center or commercial records storage facility are available in accordance with 36 CFR part 1236.

Subpart J—Transfer, Use, and Disposition of Records in a NARA Records Center

SOURCE: 64 FR 67667, Dec. 2, 1999, unless otherwise noted.

§ 1228.160 How does an agency transfer records to a NARA records center?

An agency transfers records to a NARA records center using the following procedures:

(a) *General.* NARA will ensure that its records centers meet the facilities standards in subpart K of this part, which meets the agency's obligation in § 1228.154(a).

(b) NARA records centers will not accept records that pose a threat to other records or to the health and safety of users including hazardous materials such as nitrate film, radioactive or chemically contaminated records, records exhibiting active mold growth, or untreated insect or rodent infiltrated records. Agencies may contact the NARA records center for technical advice on treating such records.

(c) Agencies may use any NARA records center (see § 1228.154(a)) if space is available for the storage of unclassified records. All NARA facilities are equipped to store classified records that have a national security classification up to Confidential, and certain NARA facilities can also accept Secret (or ''Q'') classified records. Only the Washington National Records Center is equipped to store records that have been assigned a national security classification of Top Secret, as defined in Executive Order 12958 (3 CFR, 1995 Comp., p. 333) and predecessor orders. For storage of restricted records requiring vault storage (regardless of the level of classification), agencies must contact the records center(s) they wish to use to find out if the center(s) can properly store the records.

(d) Transfers to NARA records centers must be preceded by the submission of a Standard Form 135, Records Transmittal and Receipt. Preparation and submission of this form will meet the requirements for records description provided in § 1228.154(c), except the folder title list required for permanent and unscheduled records. A folder title list is also required for records that are scheduled for sampling or selection after transfer.

(e) A separate SF 135 is required for each individual records series having the same disposition authority and disposition date.

(f) For further guidance on transfer of records to a NARA records center, consult the NARA Records Center Program web site (*http://www.archives.gov*), or current NARA publications and bulletins by contacting the Office of Regional Records Services (NR), individual NARA regional facilities, or the Washington National Records Center (NWMW).

[64 FR 67667, Dec. 2, 1999, as amended at 66 FR 27027, May 16, 2001; 67 FR 43253, June 27, 2002]

§ 1228.162 How does an agency transfer vital records to a NARA records center?

For assistance on selecting an appropriate site among NARA facilities for storage of vital records, agencies may contact NARA (NR), 8601 Adelphi Rd., College Park, MD 20740–6001. The actual transfers are governed by the general requirements and procedures in this subpart and 36 CFR part 1236.

§ 1228.164 What records must be transferred to the National Personnel Records Center (NPRC)?

General Records Schedules 1 and 2 specify that certain Federal civilian personnel, medical, and pay records must be centrally stored at the National Personnel Records Center (Civilian Personnel Records), 111 Winnebago Street, St. Louis, MO 63118. An agency must transfer the following four types of records to the NPRC:

(a) Official personnel folders of separated Federal civilian employees;

(b) Service record cards of employees who separated or transferred on or before December 31, 1947;

(c) Audited individual earnings and pay cards and comprehensive payrolls; and

(d) Employee medical folders of separated Federal civilian employees.

§ 1228.166 How does an agency transfer records to the National Personnel Records Center (NPRC)?

(a) Agencies must use the following procedures when transferring records to the NPRC:

(1) Forward the official personnel folder (OPF) and the employee medical folder (EMF) to the National Personnel Records Center at the same time.

(2) Transfer EMFs and OPFs in separate folders.

(b) For further guidance consult the NPRC web site *(http://www.archives.gov/facilities/mo/st_louis.html)*.

(c) Consult the Office of Personnel Management web site *(http://www.opm.gov/feddata/html/opf.htm)* for the OPM publication The Guide to Personnel Recordkeeping for procedures on the transfer of OPFs and EMFs. (The Guide is also available from the Superintendent of Documents, U.S. Government Printing Office, Mail Stop: SSOP, Washington, DC 20402–9328.)

[64 FR 67667, Dec. 2, 1999, as amended at 67 FR 43253, June 27, 2002]

§ 1228.168 How can records be used in NARA records centers?

(a) Agency records transferred to a NARA records center remain in the legal custody of the agency. NARA acts as the agency's agent in maintaining the records. NARA will not disclose the record except to the agency which maintains the record, or under rules established by that agency which are not inconsistent with existing laws.

(b) Federal agencies must use Standard Form (SF) 180, Request Pertaining to Military Records, to obtain information from military service records in the National Personnel Records Center (Military Personnel Records). Agencies may furnish copies of that form to the public to aid in inquiries. Members of the public and non-governmental organizations also may obtain copies of SF 180 by submitting a written request to the National Personnel Records Center (Military Personnel Records), 9700 Page Boulevard, St. Louis, MO 63132. OMB Control Number 3095–0029 has been assigned to the SF 180.

(c) Use Standard Form 127, Request for Official Personnel Folder (Separated Employee), to request transmission of personnel folders of separated employees stored at the National Personnel Records Center.

(d) Use Standard Form 184, Request for Employee Medical Folder (Separated Employee), to request medical folders stored at the National Personnel Records Center.

(e) Use Optional Form 11, Reference Request—Federal Records Center to request medical records transferred to other NARA records centers prior to September 1, 1984. The request must include the name and address of the agency's designated medical records manager.

(f) For any other requests, use the Optional Form 11, Reference Request—Federal Records Centers, a form jointly designated by that agency and NARA, or their electronic equivalents.

§ 1228.170 How are disposal clearances managed for records in NARA records centers?

(a) The National Personnel Records Center will destroy records covered by General Records Schedules 1 and 2 in accordance with those schedules without further agency clearance.

(b) NARA records centers will destroy other eligible Federal records only with the written concurrence of the agency having legal custody of the records.

(c) NARA records centers will maintain documentation on the final disposition of records, as required in 36 CFR 1220.36, for the period of time required by General Records Schedule 16.

(d) When NARA approves an extension of retention period beyond the time authorized in the records schedule for records stored in NARA records centers, NARA will notify those affected records centers to suspend disposal of the records (see § 1228.54(e)).

Subpart K—Facility Standards for Records Storage Facilities

SOURCE: 64 FR 67642, Dec. 2, 1999, unless otherwise noted.

GENERAL

1228.220 What authority applies to this subpart?

NARA is authorized to establish, maintain and operate records centers for Federal agencies under 44 U.S.C. 2907. NARA is authorized, under 44 U.S.C. 3103, to approve a records center that is maintained and operated by an agency. NARA is also authorized to promulgate standards, procedures, and guidelines to Federal agencies with respect to the storage of their records in commercial records storage facilities. See 44 U.S.C. 2104(a), 2904 and 3102. The regulations in this subpart apply to all records storage facilities Federal agencies use to store, service, and dispose of their records.

1228.222 What does this subpart cover?

(a) This subpart covers the establishment, maintenance, and operation of records centers, whether Federally-owned and operated by NARA or another Federal agency, or Federally-owned and contractor operated. This subpart also covers an agency's use of commercial records storage facilities. Records centers and commercial records storage facilities are referred to collectively as records storage facilities. This subpart specifies the minimum structural, environmental, property, and life-safety standards that a records storage facility must meet when the facility is used for the storage of Federal records.

(b) Except where specifically noted, this subpart applies to all records storage facilities. Certain noted provisions apply only to new records storage facilities.

1228.224 Publications incorporated by reference.

(a) *General*. The following publications cited in this section are hereby incorporated by reference into this part 1228. They are available from the issuing organizations at the addresses listed in this section. They are also available for inspection at the Office of the Federal Register, 800 North Capitol Street NW., suite 700, Washington, DC. This incorporation by reference was approved by the Director of the Federal Register in accordance with 5 U.S.C. 552(a) and 1 CFR Part 51. These materials are incorporated as they exist on the date of approval, and a document indicating any change in these materials will be published in the FEDERAL REGISTER.

(b) *American Society of Testing and Materials (ASTM) standards*. The following ASTM standard is available from the American Society of Testing and Materials, 100 Barr Harbor Drive, West Conshohocken, PA, 19428–2959, or on-line at *www.astm.org:*

E 119–98, Standard Test Methods for Fire Tests of Building Construction and Materials.

(c) *National Fire Protection Association (NFPA) standards*. The following NFPA standards are available from the National Fire Protection Association, 1 Batterymarch Park, P.O. Box 9109, Quincy, MA 02269–9101, or on-line at *http://catalog.nfpa.org:*

NFPA 10, Standard for Portable Fire Extinguishers (1994 Edition).

NFPA 13, Standard for the Installation of Sprinkler Systems (1996 Edition).

NFPA 20, Standard for the Installation of Centrifugal Fire Pumps (1996 Edition).

NFPA 40, Standard for the Storage and Handling of Cellulose Nitrate Motion Picture Film (1997 Edition).

NFPA 42, Code for the Storage of Pyroxylin Plastic (1997 Edition).

NFPA 72, National Fire Alarm Code (1996 Edition).

NFPA 101, Life Safety Code (1997 Edition).

NFPA 221, Standard for Fire Walls and Fire Barrier Walls (1994 Edition).

NFPA 231, Standard for General Storage (1998 Edition).

NFPA 231C, Standard for Rack Storage of Materials (1998 Edition).

NFPA 232, Standard for the Protection of Records (1995 Edition).

NFPA 232A, Guide for Fire Protection of Archives and Records Centers (1995 Edition).

(d) *Underwriters Laboratory (UL) standards*. The following UL standards are available from the Underwriters Laboratory at *www.ul.com* or from Global Engineering Documents, 15 Inverness Way East, Englewood, CO 80112:

UL 611, Central-Station Burglar-Alarm Systems (February 22, 1996).

UL 827, Central-Station Alarm Services (April 23, 1999).

UL 1076, Proprietary Burglar Alarm Units and Systems (February 1, 1999).

(e) *American Society of Heating, Refrigerating and Air-Conditioning Engineers, Inc. (ASHRAE) standards.* The following ASHRAE standards are available from ASHRAE at ASHRAE Customer Service, 1791 Tullie Circle NE, Atlanta, GA 30329 or online at *www.ASHRAE.org:*

ANSI/ASHRAE 55–1992, Thermal Environmental Conditions for Human Occupancy.

ANSI/ASHRAE 62–1989, Ventilation for Acceptable Indoor Air Quality.

(f) *American National Standards Institute (ANSI) standards.* The following ANSI standards are available from the American National Standards Institute, 11 West 42nd St., New York, NY 10036:

ANSI/NAPM IT9.18–1996, Imaging Materials—Processed Photographic Plates—Storage Practices.

ANSI/NAPM IT9.20–1996, Imaging Materials—Reflection Prints—Storage Practices.

ANSI/NAPM IT9.23–1996, Imaging Materials—Polyester Base Magnetic Tape—Storage.

ANSI/PIMA IT9.11–1998, Imaging Materials—Processed Safety Photographic Films—Storage.

ANSI/PIMA IT9.25–1998, Imaging Materials—Optical Disc Media—Storage.

§ 1228.226 Definitions.

The following definitions apply to this subpart:

Auxiliary spaces mean non-records storage areas such as offices, research rooms, other work and general storage areas but excluding boiler rooms or rooms containing equipment operating with a fuel supply such as generator rooms.

Commercial records storage facility has the meaning specified in § 1220.14 of this chapter.

Existing records storage facility means any records center or commercial records storage facility used to store records on January 2, 2000, and that has stored records continuously since that date.

Fire barrier wall means a wall, other than a fire wall, having a fire resistance rating, constructed in accordance with NFPA 221 (1994), Standard for Fire Walls and Fire Barrier Walls, Chapter 4.

Licensed fire protection engineer means a licensed or registered professional engineer with a recognized specialization in fire protection engineering. For those States that do not separately license or register fire protection engineers, a licensed or registered professional engineer with training and experience in fire protection engineering, operating within the scope of that licensing or registration, who is also a professional member of the Society of Fire Protection Engineers.

Must and *provide* mean that a provision is mandatory.

New records storage facility means any records center or commercial records storage facility established or converted for use as a records center or commercial records storage facility on or after January 3, 2000.

Permanent record has the meaning specified in § 1220.14 of this chapter.

Records center has the meaning specified in § 1220.14 of this chapter.

Records storage area means the area containing records that is enclosed by four fire walls, the floor, and the ceiling.

Records storage facility has the meaning specified in § 1220.14 of this chapter.

Sample/select records means records whose final disposition requires an analytical or statistical sampling prior to final disposition authorization, in which some percentage of the original accession will be retained as permanent records.

Should or *may* means that a provision is recommended or advised but not required.

Temporary record has the meaning specified in § 1220.14 of this chapter.

Unscheduled records has the meaning specified in § 1220.14 of this chapter.

[64 FR 67642, Dec. 2, 1999; 64 FR 68946, Dec. 9, 1999]

FACILITY STANDARDS

§ 1228.228 What are the facility requirements for all records storage facilities?

(a) The facility must be constructed with non-combustible materials and building elements, including walls, columns and floors. An agency may request a waiver of this requirement from NARA for an existing records storage facility with combustible building elements to continue to operate until October 1, 2009. In its request for a waiver, the agency must provide

documentation that the facility has a fire suppression system specifically designed to mitigate this hazard and that the system meets the requirements of § 1228.230(s). Requests must be submitted to the Director, Space and Security Management Division (NAS), National Archives and Records Administration, 8601 Adelphi Road, College Park, MD 20740–6001.

(b) A facility with two or more stories must be designed or certified by a licensed fire protection engineer and civil/structural engineer to avoid catastrophic failure of the structure due to an uncontrolled fire on one of the intermediate floor levels.

(c) The building must be sited a minimum of five feet above and 100 feet from any 100 year flood plain areas, or be protected by an appropriate flood wall that conforms to local or regional building codes.

(d) The facility must be designed in accordance with regional building codes to provide protection from building collapse or failure of essential equipment from earthquake hazards, tornados, hurricanes and other potential natural disasters.

(e) Roads, fire lanes and parking areas must permit unrestricted access for emergency vehicles.

(f) A floor load limit must be established for the records storage area by a licensed structural engineer. The limit must take into consideration the height and type of the shelving or storage equipment, the width of the aisles, the configuration of the space, etc. The allowable load limit must be posted in a conspicuous place and must not be exceeded.

(g) The facility must ensure that the roof membrane does not permit water to penetrate the roof. NARA strongly recommends that this requirement be met by not mounting equipment on the roof and placing nothing else on the roof that may cause damage to the roof membrane. Alternatively, a facility may meet this requirement with stringent design specifications for roof-mounted equipment in conjunction with a periodic roof inspection program performed by appropriately certified professionals.

(1) New records storage facilities must meet the requirements in this paragraph (g) January 3, 2000.

(2) Existing facilities must meet the requirements in this paragraph (g) no later than October 1, 2009.

(h) Piping (with the exception of fire protection sprinkler piping and storm water roof drainage piping) must not be run through records storage areas unless supplemental measures such as gutters or shields are used to prevent water leaks and the piping assembly is inspected for potential leaks regularly. If drainage piping from roof drains must be run though records storage areas, the piping must be run to the nearest vertical riser and must include a continuous gutter sized and installed beneath the lateral runs to prevent leakage into the storage area. Vertical pipe risers required to be installed in records storage areas must be fully enclosed by shaft construction with appropriate maintenance access panels.

(1) New records storage facilities must meet the requirements in this paragraph (h) January 3, 2000.

(2) Existing facilities must meet the requirements in this paragraph (h) no later than October 1, 2009.

(i) The following standards apply to records storage shelving:

(1) All storage shelving must be designed and installed to provide seismic bracing that meets the requirements of the applicable regional building code;

(2) Steel shelving or other open-shelf records storage equipment must be braced to prevent collapse under full load. Each shelving unit must be industrial style shelving rated at least 50 pounds per cubic foot supported by the shelf;

(3) Compact mobile shelving systems (if used) must be designed to permit proper air circulation and fire protection (detailed specifications that meet this requirement can be provided by NARA by writing to Director, Space and Security Management Division (NAS), National Archives and Records Administration, 8601 Adelphi Road, College Park, MD 20740–6001.).

(j) The area occupied by the records storage facility must be equipped with an anti-intrusion alarm system, or equivalent, meeting the requirements of Underwriters Laboratory (UL)

Standard 1076, Proprietary Burglar Alarm Units and Systems (February 1, 1999), level AA, to protect against unlawful entry after hours and to monitor designated interior storage spaces. This intrusion alarm system must be monitored in accordance with UL Standard 611, Central-Station Burglar-Alarm Systems (February 22, 1996).

(k) The facility must comply with the requirements for a Level III facility as defined in the Department of Justice, U. S. Marshals Service report ''Vulnerability Assessment of Federal Facilities'' dated June 28, 1995. These requirements are provided in Appendix A to this Part 1228. Agencies may require compliance with Level IV or Level V facility security requirements if the facility is classified at the higher level.

(l) Records contaminated by hazardous materials, such as radioactive isotopes or toxins, infiltrated by insects, or exhibiting active mold growth must be stored in separate areas having separate air handling systems from other records.

(m) To eliminate damage to records and/or loss of information due to insects, rodents, mold and other pests that are attracted to organic materials under specific environmental conditions, the facility must have an Integrated Pest Management program as defined in the Food Protection Act of 1996 (Section 303, Public Law 104–170, 110 Stat. 1512). This states in part that Integrated Pest Management is a sustainable approach to managing pests by combining biological, cultural, physical, and chemical tools in a way that minimizes economic, health, and environmental risks. The IPM program emphasizes three fundamental elements:

(1) *Prevention*. IPM is a preventive maintenance process that seeks to identify and eliminate potential pest access, shelter, and nourishment. It also continually monitors for pests themselves, so that small infestations do not become large ones;

(2) *Least-toxic methods*. IPM aims to minimize both pesticide use and risk through alternate control techniques and by favoring compounds, formulations, and application methods that present the lowest potential hazard to humans and the environment; and

(3) *Systems approach*. The IPM pest control contract must be effectively coordinated with all other relevant programs that operate in and around a building, including plans and procedures involving design and construction, repairs and alterations, cleaning, waste management, food service, and other activities.

(n) For new records storage facilities only, the additional requirements in this paragraph (n) must be met:

(1) Do not install mechanical equipment containing motors rated in excess of 1 HP within records storage areas (either floor mounted or suspended from roof support structures).

(2) Do not install high-voltage electrical distribution equipment (i.e., 13.2kv or higher switchgear and transformers) within records storage areas (either floor mounted or suspended from roof support structures).

(3) A redundant source of primary electric service such as a second primary service feeder should be provided to ensure continuous, dependable service to the facility especially to the HVAC systems, fire alarm and fire protection systems. Manual switching between sources of service is acceptable.

(4) The facility must be kept under positive air pressure especially in the area of the loading dock. In addition, to prevent fumes from vehicle exhausts from entering the facility, air intake louvers must not be located in the area of the loading dock, adjacent to parking areas or in any location where a vehicle engine may be running for any period of time. Loading docks must have an air supply and exhaust system that is separate from the remainder of the facility.

[64 FR 67642, Dec. 2, 1999; 64 FR 68946, Dec. 9, 1999]

§ 1228.230 What are the fire safety requirements that apply to records storage facilities?

(a) The fire detection and protection systems must be designed or certified by a licensed fire protection engineer.

(b) All walls separating records storage areas from each other and from other storage areas in the building must be 4-hour fire resistant. The

records storage areas must not exceed a total capacity of 250,000 cubic feet of records each and must be constructed to prevent migration of fire and smoke to other spaces of the building. If the facility does not have fire compartmentalization of its records storage area or has compartmentalized records storage areas larger than 250,000 cubic feet, the facility may not store more than 250,000 cubic feet total of Federal records in the records storage area.

(c) Fire barrier walls that meet the following specifications must be provided:

(1) For existing records storage facilities, at least one-hour-rated fire barrier walls must be provided between the records storage areas and other auxiliary spaces.

(2) For new records storage facilities, two-hour-rated fire barrier walls must be provided between the records storage areas and other auxiliary spaces. One exterior wall of each stack area must be designed with a maximum fire resistive rating of one hour, or, if rated more than one hour, there must be at least one knock-out panel in one exterior wall of each stack area.

(d) Penetrations in the walls must not reduce the specified fire resistance ratings. The fire resistance ratings of structural elements and construction assemblies must be in accordance with American Society of Testing and Materials E 119–98, Standard Test Methods for Fire Tests of Building Construction and Materials.

(e) The fire resistive rating of the roof must be a minimum of ½ hour for all records storage facilities. For new records storage facilities, the fire resistive rating of the roof must also be a maximum of 1 hour.

(f) Openings in fire barrier walls separating records storage areas must be avoided to the greatest extent possible. If openings are necessary, they must be protected by self-closing or automatic Class A fire doors, or equivalent doors that maintain the same rating as the wall.

(g) Roof support structures that cross or penetrate fire barrier walls must be cut and supported independently on each side of the fire barrier wall.

(h) If fire barrier walls are erected with expansion joints, the joints must be protected to their full height.

(i) For new records storage facilities, building columns in the records storage areas must be 4-hour fire resistant from the floor to slab above or to the location where they connect to the roof framing system. For existing records storage facilities, the building columns must be at least 2-hour fire resistant.

(j) Automatic roof vents for routine ventilation purposes must not be designed into new records storage facilities. Automatic roof vents, designed solely to vent in the case of a fire, with a temperature rating at least twice that of the sprinkler heads are acceptable.

(k) Where lightweight steel roof or floor supporting members (e.g., bar joists having top chords with angles 2 by 1½ inches or smaller, ¼-inch thick or smaller, and 13/16-inch or smaller web diameters) are present, they must be protected either by applying a 10-minute fire resistive coating to the top chords of the joists, or by retrofitting the sprinkler system with large drop sprinkler heads. If a fire resistive coating is applied, it must be a product that will not release (off gas) harmful fumes into the facility. If fire resistive coating is subject to air erosion or flaking, it must be fully enclosed in a drywall containment constructed of metal studs with fire retardant drywall. Retrofitting may require modifications to the piping system to ensure that adequate water capacity and pressure are provided in the areas to be protected with these large drop sprinkler heads.

(l) No open flame (oil or gas) unit heaters or equipment may be installed or used in any records storage area.

(m) For existing records storage facilities, boiler rooms or rooms containing equipment operating with a fuel supply (such as generator rooms) must be separated from records storage areas by 2-hour-rated fire barrier walls with no openings directly from these rooms to the records storage areas. Such areas must be vented directly to the outside to a location where fumes will not be drawn back into the facility.

(n) For new records storage facilities, boiler rooms or rooms containing equipment operating with a fuel supply (such as generator rooms) must be separated from records storage areas by 4-hour-rated fire barrier walls with no openings directly from these rooms to the records storage areas. Such areas must be vented directly to the outside to a location where fumes will not be drawn back into the facility.

(o) For new records storage facilities, fuel supply lines must not be installed in areas containing records and must be separated from such areas with 4-hour rated construction assemblies.

(p) Equipment rows running perpendicular to the wall must comply with NFPA 101 (1997), Life Safety Code, with respect to egress requirements.

(q) No oil-type electrical transformers, regardless of size, except thermally protected devices included in fluorescent light ballasts, may be installed in the records storage areas. All electrical wiring must be in metal conduit, except that armored cable may be used where flexible wiring connections to light fixtures are required. Battery charging areas for electric forklifts must be separated from records storage areas with at least a 2-hour rated fire barrier wall.

(r) Hazardous materials, including records on cellulose nitrate film, must not be stored in records storage areas. Nitrate motion picture film and nitrate sheet film may be stored in separate areas that meet the requirements of the appropriate NFPA standard, NFPA 40 (1997), Standard for the Storage and Handling of Cellulose Nitrate Motion Picture Film, or NFPA 42 (1997), Code for the Storage of Pyroxylin Plastic.

(s) All records storage and adjoining areas must be protected by a professionally-designed fire-safety detection and suppression system that is designed to limit the maximum anticipated loss in any single fire event to a maximum of 300 cubic feet of records destroyed by fire. Section 1228.242 specifies how to document compliance with this requirement.

§ 1228.232 What are the requirements for environmental controls for records storage facilities?

(a) *Paper-based temporary records.* Paper-based temporary records must be stored under environmental conditions that prevent the active growth of mold. Exposure to moisture through leaks or condensation, relative humidities in excess of 70%, extremes of heat combined with relative humidity in excess of 55%, and poor air circulation during periods of elevated heat and relative humidity are all factors that contribute to mold growth.

(b) *Nontextual temporary records.* Nontextual temporary records, including microforms and audiovisual and electronic records, must be stored in records storage space that will ensure their preservation for their full retention period. New records storage facilities that store nontextual temporary records must meet the requirements in this paragraph (b) January 3, 2000. Existing records storage facilities that store nontextual temporary records must meet the requirements in this paragraph (b) no later than October 1, 2009. At a minimum, nontextual temporary records must be stored in records storage space that meets the requirements for medium term storage set by the appropriate standard in this paragraph (b). In general, medium term conditions as defined by these standards are those that will ensure the preservation of the materials for at least 10 years with little information degradation or loss. Records may continue to be usable for longer than 10 years when stored under these conditions, but with an increasing risk of information loss or degradation with longer times. If temporary records require retention longer than 10 years, better storage conditions (cooler and drier) than those specified for medium term storage will be needed to maintain the usability of these records. The applicable standards are:

(1) ANSI/PIMA IT9.11–1998, Imaging Materials—Processed Safety Photographic Films—Storage;

(2) ANSI/NAPM IT9.23–1996, Imaging Materials—Polyester Base Magnetic Tape—Storage;

(3) ANSI/PIMA IT9.25–1998, Imaging Materials—Optical Disc Media—Storage;

(4) ANSI /NAPM IT9.20–1996, Imaging Materials—Reflection Prints—Storage Practices; and/or

(5) ANSI/NAPM IT9.18–1996, Imaging Materials—Processed Photographic Plates—Storage Practices.

(c) *Paper-based permanent, unscheduled and sample/select records.* Paper-based permanent, unscheduled, and sample/select records must be stored in records storage space that provides 24 hour/365 days per year air conditioning (temperature, humidity, and air exchange) equivalent to that required for office space. See ASHRAE Standard 55–1992, Thermal Environmental Conditions for Human Occupancy, and ASHRAE Standard 62–1989, Ventilation for Acceptable Indoor Air Quality, for specific requirements. New records storage facilities that store paper-based permanent, unscheduled, and/or sample/select records must meet the requirement in this paragraph (c) January 3, 2000. Existing storage facilities that store paper-based permanent, unscheduled, and/or sample/select records must meet the requirement in this paragraph (c) no later than October 1, 2009.

(d) *Nontextual permanent, unscheduled, and/or sample/select records.* All records storage facilities that store microfilm, audiovisual, and/or electronic permanent, unscheduled, and/or sample/select records must comply with the storage standards for permanent and unscheduled records in parts 1230, 1232, and/or 1234 of this chapter, respectively.

HANDLING DEVIATIONS FROM NARA'S FACILITY STANDARDS

§ 1228.234 What rules apply if there is a conflict between NARA standards and other regulatory standards that a facility must follow?

(a) If any provisions of this subpart conflict with local or regional building codes, the following rules of precedence apply:

(1) Between differing levels of fire protection and life safety, the more stringent provision applies; and

(2) Between mandatory provisions that cannot be reconciled with a requirement of this subpart, the local or regional code applies.

(b) If any of the provisions of this subpart conflict with mandatory life safety or ventilation requirements imposed on underground storage facilities by 30 CFR chapter I, 30 CFR chapter I applies.

(c) NARA reserves the right to require documentation of the mandatory nature of the conflicting code and the inability to reconcile that provision with NARA requirements.

§ 1228.236 How does an agency request a waiver from a requirement in this subpart?

(a) *Types of waivers that may be approved.* NARA may approve exceptions to one or more of the standards in this subpart for:

(1) Systems, methods, or devices that are demonstrated to have equivalent or superior quality, strength, fire resistance, effectiveness, durability, and safety to those prescribed by this subpart;

(2) Existing agency records centers that met the previous NARA standards in effect on January 2, 2000, but that do not meet a new standard required to be in place on January 3, 2000; and

(3) The application of roof requirements in §§ 1228.228 and 1228.230 to underground storage facilities.

(b) *Where to submit a waiver request.* The agency submits a waiver request, containing the information specified in paragraphs (c), (d), and/or (e) of this section to the Director, Security and Space Management Division (NAS), National Archives and Records Administration, 8601 Adelphi Rd., College Park, MD 20740–6001.

(c) *Content of request for waivers for equivalent or superior alternatives.* The agency's waiver request must contain:

(1) A statement of the specific provision(s) of this subpart for which a waiver is requested, a description of the proposed alternative, and an explanation how it is equivalent to or superior to the NARA requirement; and

(2) Supporting documentation that the alternative does not provide less protection for Federal records than

that which would be provided by compliance with the corresponding provisions contained in this subpart. Documentation may take the form of certifications from a licensed fire protection engineer or a structural or civil engineer, as appropriate; reports of independent testing; reports of computer modeling; and/or other supporting information.

(d) *Content of request for waiver for previously compliant agency records center*. The agency's waiver request must identify which requirement(s) the agency records center cannot meet and provide a plan with milestones for bringing the center into compliance.

(e) *Content of request for waiver of roof requirements for underground facility*. The agency's waiver request must identify the location of the facility and whether the facility is a drift entrance facility or a vertical access facility.

§ 1228.238 How does NARA process a waiver request?

(a) *Waiver for equivalent or superior alternative*. NARA will review the waiver request and supporting documentation.

(1) If in NARA's judgement the supporting documentation clearly supports the claim that the alternative is equivalent or superior to the NARA requirement, NARA will grant the waiver and notify the requesting agency within 30 calendar days.

(2) If NARA questions whether supporting documentation demonstrates that the proposed alternative offers at least equal protection to Federal records, NARA will consult the appropriate industry standards body or other qualified expert before making a determination. NARA will notify the requesting agency within 30 calendar days of receipt of the request that consultation is necessary and will provide a final determination within 60 calendar days. If NARA does not grant the waiver, NARA will furnish a full explanation of the reasons for its decision.

(b) *Waiver of new requirement for existing agency records center*. NARA will review the agency's waiver request and plan to bring the facility into compliance.

(1) NARA will approve the request and plan within 30 calendar days if NARA judges the planned actions and time frames for bringing the facility into compliance are reasonable.

(2) If NARA questions the feasibility or reasonableness of the plan, NARA will work with the agency to develop a revised plan that NARA can approve and the agency can implement. NARA may grant a short-term temporary waiver, not to exceed 180 calendar days, while the revised plan is under development.

(c) *Waiver of roof requirements for underground storage facilities*. NARA will normally grant the waiver and notify the requesting agency within 10 work days if the agency has not also requested a waiver of a different requirement under § 1228.236. If the agency has another waiver request pending for the same facility, NARA will respond to all of the waiver requests at the same time and within the longest time limits.

FACILITY APPROVAL AND INSPECTION REQUIREMENTS

§ 1228.240 How does an agency request authority to establish or relocate records storage facilities?

(a) *General policy*. Agencies are responsible for ensuring that records in their legal custody are stored in appropriate space as outlined in this subpart. Under § 1228.156(a), agencies are responsible for initiating action to remove records from space that does not meet these standards if deficiencies are not corrected within 6 months after initial discovery of the deficiencies by NARA or the agency and to complete removal of the records within 18 months after initial discovery of the deficiencies.

(1) *Agency records centers*. Agencies must obtain prior written approval from NARA before establishing or relocating an agency records center. Each separate agency records center must be specifically approved by NARA prior to the transfer of any records to that individual facility. If an agency records center has been approved for the storage of Federal records of one agency, any other agency that proposes to store its records in that facility must still obtain NARA approval to do so.

(2) *Commercial records storage facilities*. An agency may contract for commercial records storage services. However,

before any agency records are transferred to a commercial records storage facility, the transferring agency must ensure that the facility meets all of the requirements for an agency records storage facility set forth in this subpart and must submit the documentation required in paragraph (e) of this section.

(b) *Exclusions.* For purposes of this section, the term ''agency records center'' excludes NARA-owned and operated records centers. For purposes of this section and § 1228.244, the term ''agency records center'' also excludes agency records staging and/or holding areas with a capacity for containing less than 25,000 cubic feet of records. However, such records centers and areas, including records centers operated and maintained by NARA, must comply with the facility standards in §§ 1228.228 through 1228.232.

(c) *Content of requests for agency records centers.* Requests for authority to establish or relocate an agency records center, or to use an agency records center operated by another agency, must be submitted in writing to the Director, Space and Security Management Division (NAS), National Archives and Records Administration, 8601 Adelphi Road, College Park, MD 20740–6001.

(1) The request must identify the specific facility and, for requests to establish or relocate the agency's own records center, document compliance with the standards in this subpart. Documentation requirements for § 1228.230(s) are specified in § 1228.242.

(2) If the request is for approval of an existing agency records center that did not comply with the requirements of this subpart in effect on January 2, 2000, the request must also contain the agency's plan to modify the facility to bring it into compliance with current requirements within a three year period. Such requests must be submitted to NARA no later than July 1, 2000.

(d) *Approval of requests for agency records centers.* NARA will review the submitted documentation to ensure the facility demonstrates full compliance with the standards in this subpart. For requests submitted under paragraph (c)(2) of this section, NARA also will review the submitted plan to ensure that the plan is realistic. NARA reserves the right to visit the facility, if necessary, to make the determination of compliance. NARA will inform the agency of its decision within 45 calendar days after the request is received, and will provide the agency information on the areas of noncompliance if the request is denied. Requests will be denied only if NARA determines that the facility does not demonstrate full compliance with the standards in this subpart. Approvals will be valid for a period of 10 years, unless the facility is materially changed before then or an agency or NARA inspection finds that the facility does not meet the standards in this subpart. Material changes require submission of a new request for NARA approval.

(e) *Documentation requirements for storing Federal records in commercial records storage facilities.* At least 45 calendar days before an agency first transfers records to a commercial records storage facility, the agency must submit documentation to NARA that the facility complies with the standards in this subpart. The documentation may take the form of a copy of the agency's contract that incorporates this subpart in its provisions or a statement from the agency records officer that certifies that the facility meets the standards in this subpart. An agency must provide the documentation for each separate commercial records storage facility where its records will be stored. Documentation must be sent to the Director, Space and Security Management Division (NAS), National Archives and Records Administration, 8601 Adelphi Road, College Park, MD 20740–6001. The agency must submit updated documentation to NARA every 10 years if it continues to store records in that commercial records storage facility.

§ 1228.242 What does an agency have to do to certify a fire-safety detection and suppression system?

(a) *Content of documentation.* The agency must submit documentation to the Director, Space and Security Management Division (NAS), National Archives and Records Administration, 8601 Adelphi Road, College Park, MD 20740–6001, that describes the space

being protected (e.g., the type and stacking height of the storage equipment used, or how the space is designed, controlled, and operated) and the characteristics of the fire-safety detection and suppression system used. The documentation must demonstrate how that system meets the requirement in § 1228.230(s) through:

(1) A statement that the facility is using a NARA certified system as described in Appendix B to this part;

(2) A report of the results of independent live fire testing (Factory Mutual, Underwriters Laboratories or equivalent); or

(3) A report of the results of computer modeling, and a certification by a licensed fire protection engineer that the system has been designed to limit the maximum anticipated loss in any single fire event to a maximum of 300 cubic feet of records destroyed by fire. If this method of demonstrating compliance is chosen, the description of the system must include specific references to any industry standards used in the design, such as those issued by the National Fire Protection Association (see NFPA 13, NFPA 231, NFPA 231C, NFPA 232 and NFPA 232A).

(b) *NARA action.* (1) NARA will approve the fire-safety detection and suppression system within 10 work days if NARA has previously approved the system design for similarly configured space or if a report of independent testing of a new system design is furnished as documentation.

(2) If, in NARA's judgment, the supporting documentation provided in accordance with paragraph (a)(3) of this section clearly demonstrates compliance with § 1228.230(s), NARA will approve the fire-safety detection and suppression system within 30 calendar days.

(3) If NARA questions whether supporting documentation demonstrates compliance with § 1228.230(s), NARA will consult the appropriate industry standards body or other qualified expert before making a determination. Before any consultation, NARA may ask the agency for additional clarifying information. NARA will notify the requesting agency within 30 calendar days of receipt of the request that consultation is necessary and will provide a final determination within 60 calendar days. If NARA does not approve the system, NARA will furnish a full explanation of the reasons for its decision.

(4) NARA will maintain a list of approved alternative systems.

§ 1228.244 When may NARA conduct an inspection of a records storage facility?

(a) At the time an agency submits a request to establish an agency records center, pursuant to § 1228.240, NARA may conduct an inspection of the proposed facility to ensure that the facility complies fully with the standards in this subpart. NARA may also conduct periodic inspections of agency records centers so long as such facility is used as an agency records center. NARA will inspect its own records center facilities on a periodic basis to ensure that they are in compliance with the requirements of this subpart.

(b) Agencies must ensure, by contract or otherwise, that agency and NARA officials, or their delegates, have the right to inspect commercial records storage facilities to ensure that such facilities fully comply with the standards in this subpart. NARA may conduct periodic inspections of commercial records storage facilities so long as agencies use such facilities to store agency records. The using agency, not NARA, will be responsible for paying any fee or charge assessed by the commercial records storage facility for NARA's conducting an inspection.

(c) NARA will contact the agency operating the records center or the agency holding a contract with a commercial records storage facility in advance to set a date for the inspection.

Subpart L—Transfer of Records to the National Archives of the United States

SOURCE: 45 FR 5705, Jan. 24, 1980. Redesignated at 50 FR 15723, Apr. 19, 1985. Redesignated further at 64 FR 67667, Dec. 2, 1999.

§ 1228.260 Authority.

(a) *Transfer of records.* The Archivist of the United States is authorized by 44 U.S.C. 2107 to:

(1) Accept for deposit with the National Archives of the United States the records of a Federal agency or of the Congress determined by the Archivist of the United States to have sufficient historical or other value to warrant their continued preservation by the U.S. Government; and

(2) Direct and effect the transfer to the National Archives of the United States of Federal agency records that have been in existence for more than 30 years and that have been determined by the Archivist of the United States to have sufficient historical or other value to warrant their continued preservation by the U.S. Government.

(b) *Custody of records transferred.* Under 44 U.S.C. 2108, the Archivist of the United States is responsible for the custody, use, and withdrawal of records transferred to him.

(c) *Transferred records subject to statutory or other restrictions.* When records, the use of which is subject to statutory limitations and restrictions, are so transferred, permissive and restrictive statutory provisions concerning the examination and use of records applicable to the head of the transferring agency are applicable to the Archivist of the United States and the employees of the National Archives and Records Administration.

[54 FR 2111, Jan. 19, 1989. Redesignated at 55 FR 27433, July 2, 1990, as amended at 57 FR 22432, May 28, 1992]

§ 1228.262 Types of records to be transferred.

(a) *General.* Records that have been determined by the Archivist of the United States to have sufficient historical or other value to warrant preservation; i.e., appraised by NARA and identified as permanent records, are normally transferred to the National Archives of the United States when:

(1) They are 30 years old; or

(2) At any age when:

(i) The originating agency no longer needs to use the records for the purpose for which they were created or in its regular current business; or

(ii) Agency needs will be satisfied by use of the records in NARA research rooms or by copies of the records; and restrictions on the use of records are acceptable to NARA and do not violate the Freedom of Information Act (5 U.S.C. 552). Records appraised as permanent that are not yet eligible for transfer because of agency needs or restrictions may be stored in a Federal records center pending transfer. (See subpart I of this part.)

(b) *Archival depositories.* NARA reserves the right to determine and change the archival depository in which records transferred to the National Archives of the United States are stored. Such determinations are normally made as follows:

(1) *Presidential libraries.* Records appropriate for preservation in a Presidential library because they can most effectively be used in conjunction with materials already in that library.

(2) *Regional Archives.* (i) Records of field offices of Federal agencies, except for records of agency field offices located in the Washington, DC area;

(ii) Records including both headquarters and field office records of regional agencies such as the Tennessee Valley Authority; and

(iii) Other records determined by NARA to be of primarily regional or local interest.

(3) *National Archives Building and other Washington, DC area depositories.* (i) Records of Washington, DC area field offices of Federal agencies and other records relating to the District of Columbia and the Washington, DC area, such as records of the National Capital Planning Commission;

(ii) All other records not deposited in a Presidential library or Regional Archives.

[42 FR 57315, Nov. 2, 1977, as amended at 46 FR 60206, Dec. 9, 1981. Redesignated and amended at 50 FR 15723, 15725, Apr. 19, 1985. Redesignated at 55 FR 27433, July 2, 1990, as amended at 57 FR 22432, May 28, 1992]

§ 1228.264 Certification for retention of records in agency custody.

(a) Permanent records shall be transferred to the National Archives of the United States when the records have been in existence for more than 30 years unless the head of the agency which has custody of the records certifies in writing to the Archivist that the records must be retained in agency custody for use in the conduct of the regular current business of the agency.

Records that are scheduled in a NARA-approved records schedule to be transferred to the National Archives of the United States after a specified period of time are subject to the certification requirement only if the records are not transferred as scheduled.

(b) In order to certify that records must be retained for the conduct of regular current business, an agency should consider the following factors:

(1) Character of use (to be retained by an agency, records should be used for the normal routine business of the agency at the time of certification);

(2) Frequency of use (to be retained by an agency, records should be used more than one time per month per file unit); and,

(3) Preservation of the records (to be retained by an agency, permanently valuable records should be preserved in accordance with NARA guidelines).

(c) The written certification of need of a series of 30-year-old records for current agency business must:

(1) Include a comprehensive description and location of records to be retained;

(2) Cite the NARA approved authority for the disposition of the records if scheduled (SF 115 item number);

(3) Describe the current business for which the records are required;

(4) Estimate the length of time the records will be needed by the agency for current business (if no date is provided by the agency, approved certification requests will be effective for a maximum of five years);

(5) Explain why the current needs of the agency cannot be met by the services NARA provides for records deposited with the National Archives of the United States; and,

(6) If the records are being retained to enable the agency to provide routine public reference, cite the statute authorizing this agency activity.

(d) NARA will not accept an agency certification that a specific body of records over 30 years old, regardless of physical form or characteristics, is being used for the ''conduct of the regular current business,'' if that agency is retaining such records primarily to:

(1) Provide to persons outside the agency access which can be provided by NARA; or

(2) Function as an agency archives, unless specifically authorized by statute or NARA.

[57 FR 22433, May 28, 1992]

§ 1228.266 Audiovisual records.

The following types of audiovisual records appraised as permanent shall be transferred to the National Archives as soon as they become inactive or whenever the agency cannot provide proper care and handling of the records, including adequate storage conditions, to facilitate their preservation by the National Archives (see part 1232 of this chapter). In general the physical types described below constitute the minimum record elements for archival purposes that are required to provide for future preservation, duplication, and reference needs.

(a) *Motion pictures.* (1) Agency-sponsored or produced motion picture films (e.g., public information films) whether for public or internal use:

(i) Original negative or color original plus separate optical sound track;

(ii) Intermediate master positive or duplicate negative plus optical track sound track; and,

(iii) Sound projection print and video recording, if both exist.

(2) Agency-acquired motion picture films: Two projection prints in good condition or one projection print and one videotape.

(3) Unedited footage, outtakes and trims (the discards of film productions) that are properly arranged, labeled, and described and show unstaged, unrehearsed events of historical interest or historically significant phenomena:

(i) Original negative or color original; and

(ii) Matching print or videotape.

(b) *Still pictures.* (1) For black-and-white photographs, an original negative and a captioned print although the captioning information can be maintained in another file such as a data base if the file number correlation is clear. If the original negative is nitrate, unstable acetate, or glass based, a duplicate negative on a polyester base is also needed.

(2) For color photographs, the original color negative, color transparency, or color slide; a captioned print of the

original color negative; and/or captioning information as described above if for an original color transparency or original color slide; and a duplicate negative, or slide, or transparency, if they exist.

(3) For slide sets, the original and a reference set, and the related audio recording and script.

(4) For other pictorial records such as posters, original art work, and filmstrips, the original and a reference copy.

(c) *Sound recordings.* (1) Disc recordings:

(i) For conventional disc recordings, the master tape and two disc pressings of each recording, typically a vinyl copy for playback at 33⅓ revolutions per minute (rpm).

(ii) For compact discs, the origination recording regardless of form and two compact discs.

(2) For analog audio recordings on magnetic tape (open reel, cassette, or cartridge), the original tape, or the earliest available generation of the recording, and a subsequent generation copy for reference. Section 1232.30(d) of this subchapter requires the use of open-reel analog magnetic tape for original audio recordings.

(d) *Video recordings.* (1) For videotape, the original or earliest generation videotape and a copy for reference. Section 1232.30(c) of this subchapter requires the use of industrial-quality or professional videotapes for use as originals, although VHS copies can be transferred as reference copies.

(2) For video discs, the premaster videotape used to manufacture the video disc and two copies of the disc. Video discs that depend on interactive software and nonstandard equipment may not be acceptable for transfer.

(e) *Finding aids and production documentation.* The following records shall be transferred to the National Archives with the audiovisual records to which they pertain.

(1) Existing finding aids such as data sheets, shot lists, continuities, review sheets, catalogs, indexes, list of captions, and other documentation that are helpful or necessary for the proper identification, or retrieval of audiovisual records. Agencies should contact the appropriate Special Media Archives Services Division unit, to determine the type of hardware and software that is currently acceptable for transfer to the National Archives as an agency electronic finding aid that will accompany its audiovisual records. In general, however, agencies must transfer two copies of the electronic finding aid, one in its native format with its field structure documented, and a second copy in a contemporary format available at the time of transfer that NARA will be able to support and import to its database.

(2) Production case files or similar files that include copies of production contracts, scripts, transcripts, and appropriate documentation bearing on the origin, acquisition, release, and ownership of the production.

[61 FR 32336, June 24, 1996, as amended at 66 FR 27027, May 16, 2001]

§ 1228.268 Cartographic and architectural records.

The following classes of cartographic and architectural records appraised as permanent should be transferred to the National Archives as soon as they become inactive or whenever the agency cannot provide the proper care and handling of the materials to guarantee their preservation.

(a) *Maps and charts.* (1) Manuscript maps; printed and processed maps on which manuscript changes, additions, or annotations have been made for record purposes or which bear manuscript signatures to indicate official approval; and single printed or processed maps that have been attached to or interfiled with other documents of a record character or in any way made an integral part of a record.

(2) Master sets of printed or processed maps in the custody of the agency by which they were issued. Such master sets should be kept segregated from the stock of maps held for distribution and from maps received from other agencies. A master set should include one copy of each edition of a printed or processed map issued.

(3) Computer-related and computer-plotted maps that cannot be reproduced by the National Archives because of destruction of the magnetic tapes or other stored data or because of the unavailability of ADP equipment.

(4) Index maps, card indexes, lists, catalogs, or other finding aids that may be helpful in using the maps transferred.

(5) Records related to preparing, compiling, editing, or printing maps, such as manuscript field notebooks of surveys, triangulation and other geodetic computations, and project folders containing specifications to be followed and appraisals of source materials to be used.

(b) *Aerial photography and remote sensing imagery.* (1) Vertical and oblique negative aerial film, conventional aircraft.

(2) Annotated copy negatives, internegatives, rectified negatives, and glass plate negatives from vertical and oblique aerial film, conventional aircraft.

(3) Annotated prints from aerial film, conventional aircraft.

(4) Infrared, ultraviolet, multispectral (multiband), video, imagery radar, and related tapes, converted to a film base.

(5) Indexes and other finding aids in the form of photo mosaics, flight line indexes, coded grids, and coordinate grids.

(c) *Architectural and related engineering drawings.* (1) Design drawings, preliminary and presentation drawings, and models which document the evolution of the design of a building or structure.

(2) Master sets of drawings which document the condition of a building or structure in terms of its initial construction and subsequent alterations. This category includes final working drawings, ''as-built'' drawings, shop drawings, and repair and alteration drawings.

(3) Drawings of repetitive or standard details of one or more buildings or structures.

(4) ''Measured'' drawings of existing buildings and original or photocopies of drawings reviewed for approval.

(5) Related finding aids and specifications to be followed.

[42 FR 57315, Nov. 2, 1977. Redesignated at 50 FR 15723, Apr. 19, 1985, and 55 FR 27433, July 2, 1990, as amended at 57 FR 22433, May 28, 1992]

§ 1228.270 Electronic records.

(a) *Timing of transfers.* Each agency is responsible for the integrity of the records it transfers to the National Archives. To ensure that permanently valuable electronic records are preserved, each Federal agency shall transfer electronic records to NARA promptly in accordance with the agency's records disposition schedule. Furthermore, if the agency cannot provide proper care and handling of the media (see part 1234 of this chapter), or if the media are becoming obsolete and the agency cannot migrate the records to newer media, the agency shall contact NARA to arrange for timely transfer of permanently valuable electronic records, even when sooner than provided in the records schedule.

(b) *Temporary retention of copy.* Each agency shall retain a second copy of any permanently valuable electronic records that it transfers to the National Archives until it receives official notification from NARA that the transfer was successful and that NARA has assumed responsibility for continuing preservation of the records.

(c) *Transfer media.* This paragraph covers the transfer of permanent records to the National Archives; it does not apply to the use or storage of records in agency custody. See 36 CFR 1234.30 for the requirements governing the selection of electronic records storage media. The agency shall use only media that is sound and free from defects for such transfers; the agency shall choose reasonable steps to meet this requirement. The media forms that are approved for transfer are open reel magnetic tape, magnetic tape cartridge, and Compact-Disk, Read Only Memory (CD–ROM), as described in paragraphs (c) (1) and (2) of this section.

(1) *Magnetic tape.* Agencies may transfer electronic records to the National Archives on magnetic tape using either open-reel magnetic tape or tape cartridges. Open-reel magnetic tape shall be on ½ inch 9-track tape reels recorded at 1600 or 6250 bpi that meet ANSI X3.39–1986, American National Standard: Recorded Magnetic Tape for Information Interchange (1600 CPI, PE) or ANSI X3.54–1986, American National Standard: Recorded Magnetic Tape for

Information Interchange (6250 CPI, Group Coded Recording), respectively. Tape cartridges shall be 18-track 3480-class cartridges recorded at 37,871 bpi that meet ANSI X3.180–1990, American National Standard: Magnetic Tape and Cartridge for Information Interchange—18-Track, Parallel, ½ inch (12.65 mm), 37871 cpi (1491 cpmm), Group-Coded—Requirements for Recording. The data shall be blocked at no more than 32,760 bytes per block. The standards cited in this paragraph are available from the American National Standards Institute, (ANSI), Inc., 11 West 42nd Street, New York, NY 10036. They are also available for inspection at the Office of the Federal Register, 800 North Capitol Street, NW., Suite 700, Washington, D.C. This incorporation by reference was approved by the Director of the Federal Register in accordance with 5 U.S.C. 552(a) and 1 CFR part 51. These materials are incorporated by reference as they exist on the date of approval and a notice of any change in these materials will be published in the FEDERAL REGISTER.

(2) *Compact-Disk, Read Only Memory (CD–ROM).* Agencies may use CD–ROMs to transfer electronic records scheduled to be preserved in the National Archives. The files on such a CD–ROM must comply with the format and documentation requirements specified in paragraphs (d) and (e) of this section.

(i) CD–ROMs used for this purpose must conform to ANSI/NISO/ISO 9660–1990, American National Standard for Volume and File Structure of CD–ROM for Information Exchange. The standard is available from the National Information Standards Organization (NISO), Press Fulfillment, P.O. Box 451, Annapolis Junction, MD 20701, or the American National Standards Institute, 11 West 42nd Street, 13th floor, New York NY 10036. It is also available for inspection at the Office of the Federal Register, 800 North Capitol Street, NW, Suite 700, Washington, DC. This incorporation by reference was approved by the Director of the Federal Register in accordance with 5 U.S.C. 552(a) and 1 CFR part 51. These materials are incorporated by reference as they exist on the date of approval and a notice of any change in these materials will be published in the FEDERAL REGISTER.

(ii) Permanently valuable electronic records must be stored in discrete files. The CD–ROMs transferred may contain other files, such as software or temporary records, but all permanently valuable records must be in files that contain only permanent records. Agencies should indicate at the time of transfer if a CD–ROM contains temporary records and, if so, where those records are located on the CD–ROM. The agency must also specify whether NARA should return the CD–ROM to the agency or dispose of it after copying the permanent records to an archival medium.

(iii) In some cases, permanently valuable electronic records that an agency disseminates on CD–ROM exist on other media, such as magnetic tape. In such cases, the agency and NARA will mutually agree on the most appropriate medium for transfer of the records to the National Archives.

(d) *Formats.* The agency may not transfer to the National Archives electronic records that are in a format dependent on specific hardware and/or software. The records shall be written in ASCII or EBCDIC with all control characters and other non-data characters removed (except as specified in paragraphs (d) (1), (2), and (3) of this section). The records must not be compressed unless NARA has approved the transfer in the compressed form in advance. In such cases, NARA may require the agency to provide the software to decompress the records.

(1) *Data files and databases.* Data files and databases shall be transferred to the National Archives as flat files or as rectangular tables; i.e., as two-dimensional arrays, lists, or tables. All ''records'' (within the context of the computer program, as opposed to a Federal record) or ''tuples,'' i.e., ordered collections of data items, within a file or table should have the same logical format. Each data element within a record should contain only one data value. A record should not contain nested repeating groups of data items. The file should not contain extraneous control characters, except record length indicators for variable

length records, or marks delimiting a data element, field, record, or file. If records or data elements in different files need to be linked or combined, then each record must contain one or more data elements that constitute primary and/or foreign keys enabling valid linkages between the related records in separate files.

(2) *Textual documents.* Electronic textual documents shall be transferred as plain ASCII files; however, such files may contain Standard Generalized Markup Language (SGML) tags.

(3) *Digital spatial data files.* Digital spatial data files shall be transferred to NARA in accordance with the Spatial Data Transfer Standard (SDTS) as defined in the Federal Information Processing Standard 173–1 (June 10, 1994) which is incorporated by reference. Digital geospatial data files created on systems procured prior to February 1994 which do not have a SDTS capability are exempt from this requirement. Agencies should consult with NARA for guidance on transferring noncompliant digital geospatial data files created between February 1, 1994 and the effective date of this paragraph. The standard cited in this paragraph is available from the National Technical Information Service, Department of Commerce, Springfield, VA 22161. When ordering, cite FIPSPUB173–1, Spacial Data Transfer Standard (SDTS). This standard is also available for inspection at the Office of the Federal Register, 800 North Capitol Street, NW., Suite 700, Washington, D.C. This incorporation by reference was approved by the Director of the Federal Register in accordance with 5 U.S.C. 552(a) and 1 CFR part 51. These materials are incorporated by reference as they exist on the date of approval and a notice of any change in these materials will be published in the FEDERAL REGISTER.

(4) *Other categories of electronic records.* Agencies should identify any foreseeable problems in the possible transfer of potentially permanent electronic records in accordance with paragraphs (d) (1), (2), and (3) of this section at the time the records are scheduled. Special transfer requirements agreed upon by NARA and the agency shall be included in the disposition instructions.

(5) *NARA consultation.* The agency shall consult with NARA for guidance on the transfer of types of electronic records other than those prescribed in paragraphs (d) (1), (2), and (3) of this section.

(e) *Documentation.* Documentation adequate to identify, service and interpret electronic records that have been designated for preservation by NARA shall be transferred with the records. This documentation shall include completed NARA Form 14097, Technical Description for Transfer of Electronic Records, and a completed NARA Form 14028, Information System Description Form, or their equivalents. Where possible, agencies should submit required documentation in an electronic form that conforms to the provisions of this section.

(1) *Data files.* Documentation for data files and data bases must include record layouts, data element definitions, and code translation tables (codebooks) for coded data. Data element definitions, codes used to represent data values and interpretations of these codes must match the actual format and codes as transferred.

(2) *Digital spatial data files.* Digital spatial data files shall include the documentation specified in paragraph (e)(1) of this section. In addition, documentation for digital spatial data files may include metadata that conforms to the Federal Geographic Data Committee's Content Standards for Digital Geospatial Metadata, as specified in Executive Order 12906 of April 11, 1994 (3 CFR, 1995 Comp., p. 882).

(3) *Documents containing SGML tags.* Documentation for electronic files containing textual documents with SGML tags shall include a table for interpreting the SGML tags, when appropriate.

[62 FR 54584, Oct. 21, 1997, as amended at 66 FR 27027, May 16, 2001]

§ 1228.272 Transfer of records to the National Archives of the United States.

(a) *Policy.* (1) Federal records will be transferred to NARA's legal custody into the National Archives of the United States only if they are listed as

permanent on an SF 115, Request for Records Disposition Authority, approved by NARA since May 14, 1973, or if they are accretions (continuations of series already accessioned) to holdings of the National Archives. Transfers are initiated by submission of an SF 258, Agreement to Transfer Records to the National Archives of the United States.

(2) Each SF 258 must relate to a specific records series, as identified on the SF 115, Request for Records Disposition Authority, in accumulations of one or more consecutive years.

(b) *Initiation of request to transfer*. (1) NARA will provide the SF 258 for records scheduled for immediate transfer on an SF 115 approved after September 30, 1987. NARA will send the SF 258 to the agency with the approved SF 115. The agency will sign and return the SF 258 to the address indicated on the form.

(2) *Future transfers of series in agency space*. Sixty days before the scheduled date of transfer to the National Archives of the United States, the transferring agency must submit an SF 258 to the Office of Records Services—Washington, DC (NWMD), 8601 Adelphi Road, College Park, MD 20740–6001, or to the appropriate Regional Records Services facility if so provided on the SF 115. NARA will determine whether specified restrictions are acceptable and whether adequate space and equipment are available.

(3) *Future transfers of series in Federal Records Centers*. NARA will initiate the SF 258 and send it to the agency 90 days before the scheduled transfer date. The agency shall approve or disapprove the SF 258 and send it to the address indicated on the form 60 days before the scheduled transfer date.

(c) *Physical and legal transfer*. The Office of Records Services—Washington, DC (NWMD), will provide shipping or delivery instructions to the agency or Federal Records Center. Legal custody of the records passes to NARA when the NARA official signs the SF 258 acknowledging receipt of the records.

[52 FR 34134, Sept. 9, 1987. Redesignated at 55 FR 27433, July 2, 1990, as amended at 57 FR 22432, 22434, May 28, 1992; 63 FR 35829, July 1, 1998; 64 FR 67668, Dec. 2, 1999; 66 FR 27027, May 16, 2001]

§ 1228.274 Restrictions on transferred records.

(a) *General*. Before records are transferred to the National Archives, the head of an agency may state in writing restrictions that appear to him or her to be necessary or desirable in the public interest on the use or examination of records. The head of an agency must, however, justify and cite the statute or Freedom of Information Act exemption (5 U.S.C. 552(b)) that authorizes placing restrictions on the use or examination of records being considered for transfer. If the Archivist agrees, restrictions will be placed on the records.

(b) *Records less than 30 years old*. Unless required by law, the Archivist will not remove or relax restrictions placed upon records less than 30 years old without the concurrence in writing of the head of the agency from which the material was transferred or of his or her successor, if any. If the transferring agency has been terminated and there is no successor in function, the Achivist is authorized to relax, remove or impose restrictions in the public interest.

(c) *Records 30 or more years old*. After the records have been in existence for 30 years or more, statutory or other restrictions referred to in this section shall expire unless the Archivist determines, after consulting with the head of the transferring agency, that the restrictions shall remain in force for a longer period. Such restrictions may be extended by the Archivist beyond 30 years only for reasons consistent with standards established in relevant statutory law, including the Freedom of Information Act (5 U.S.C. 552). Restrictions are systematically extended beyond 30 years where agencies advise NARA on the SF 258 that a particular category of records requires such protection. NARA has identified specific categories of records, including classified information and information that would invade the privacy of an individual, which may require extended protection beyond 30 years. See 36 CFR part 1256.

[57 FR 22434, May 28, 1992]

§ 1228.276 Records subject to the Privacy Act of 1974.

For records constituting systems of records subject to the Privacy Act of 1974 (5 U.S.C. 552a), the agency shall attach to the SF 258 the most recent agency Privacy Act system notice covering the records.

[57 FR 22434, May 28, 1992]

§ 1228.278 Release of equipment.

Equipment received with the transfer of records to the National Archives will, when emptied, normally be retained by NARA or disposed of in accordance with applicable excess property regulations, unless the transferring agency requests its return.

[42 FR 57316, Nov. 2, 1977. Redesignated at 50 FR 15723, Apr. 19, 1985, and 55 FR 27433, July 2, 1990]

§ 1228.280 Use of records transferred to the National Archives.

(a) In accordance with 44 U.S.C. 2108, restrictions lawfully imposed on the use of transferred records will be observed and enforced by NARA to the extent to which they do not violate 5 U.S.C. 552. The regulations in subchapters B and C of this title, insofar as they relate to the use of records in the National Archives of the United States apply to official use of the records by Federal agencies as well as to the public.

(b) In instances of demonstrated need, and subject to any restrictions on their use, records deposited in the National Archives may be borrowed for official use outside the building in which they are housed by Federal agencies and the Congress, subject to the following conditions:

(1) Documents of high intrinsic value shall not be removed from the building in which they are housed except with the written approval of the Archivist;

(2) Records will not be loaned to enable agencies to answer routine reference inquiries from other agencies or the public;

(3) Records in fragile condition, or otherwise deteriorated to an extent that further handling will endanger them, will not be loaned;

(4) Each official who borrows records shall provide a receipt for them at the time they are delivered and shall be responsible for their prompt return upon the expiration of the loan period specified by NARA; and

(5) Each official who borrows computer magnetic tapes shall assume responsibility for proper care and handling of the tapes.

[42 FR 57316, Nov. 2, 1977. Redesignated at 50 FR 15723, Apr. 19, 1985, and amended at 50 FR 26935, June 28, 1985. Redesignated at 55 FR 27433, July 2, 1990, as amended at 57 FR 22434, May 28, 1992]

§ 1228.282 Disposal clearances.

No records of a Federal agency still in existence will be disposed of by NARA except with the written concurrence of the agency concerned or as authorized on Standard Form 258, Agreement to Transfer Records to the National Archives of the United States.

[66 FR 27027, May 16, 2001]

APPENDIX A TO PART 1228—MINIMUM SECURITY STANDARDS FOR LEVEL III FEDERAL FACILITIES

Reproduced from Section 2.3 (pp. 2-6 through 2-9) of
U.S. Department of Justice, United States Marshals Service report
Vulnerability Assessment of Federal Facilities

RECOMMENDED STANDARDS CHART

PERIMETER SECURITY	**LEVEL III**
PARKING	
CONTROL OF FACILITY PARKING	●
CONTROL OF ADJACENT PARKING	▲
AVOID LEASES WHERE PARKING CANNOT BE CONTROLLED	▲
LEASES SHOULD PROVIDE SECURITY CONTROL FOR ADJACENT PARKING	▲
POST SIGNS AND ARRANGE FOR TOWING UNAUTHORIZED VEHICLES	●
ID SYSTEM AND PROCEDURES FOR AUTHORIZED PARKING (PLACARD, DECAL, CARD KEY, ETC.)	●
ADEQUATE LIGHTING FOR PARKING AREAS	●
CLOSED CIRCUIT TELEVISION (CCTV) MONITORING	
CCTV SURVEILLANCE CAMERAS WITH TIME LAPSE VIDEO RECORDING	○
POST SIGNS ADVISING OF 24 HOUR VIDEO SURVEILLANCE	○
LIGHTING	
LIGHTING WITH EMERGENCY POWER BACKUP	●
PHYSICAL BARRIERS	
EXTEND PHYSICAL PERIMETER WITH BARRIERS (CONCRETE AND/OR STEEL COMPOSITION)	▲
PARKING BARRIERS	▲
ENTRY SECURITY	**LEVEL III**
RECEIVING/SHIPPING	
REVIEW RECEIVING/SHIPPING PROCEDURES (CURRENT)	●
IMPLEMENT RECEIVING/SHIPPING PROCEDURES (MODIFIED)	●

● REQUIRED ○ RECOMMENDED ▲ DESIRABLE

ENTRY SECURITY, cont.	LEVEL III
ACCESS CONTROL	
EVALUATE FACILITY FOR SECURITY GUARD REQUIREMENTS	●
SECURITY GUARD PATROL	○
INTRUSION DETECTION SYSTEM WITH CENTRAL MONITORING CAPABILITY	●
UPGRADE TO CURRENT LIFE SAFETY STANDARDS (FIRE DETECTION, FIRE SUPPRESSION SYSTEMS, ETC.)	●
ENTRANCES/EXITS	
X-RAY & MAGNETOMETER AT PUBLIC ENTRANCES	○
REQUIRE X-RAY SCREENING OF ALL MAIL/PACKAGES	○
HIGH SECURITY LOCKS	●
INTERIOR SECURITY	**LEVEL III**
EMPLOYEE/VISITOR IDENTIFICATION	
AGENCY PHOTO ID FOR ALL PERSONNEL DISPLAYED AT ALL TIMES	○
VISITOR CONTROL/SCREENING SYSTEM	●
VISITOR IDENTIFICATION ACCOUNTABILITY SYSTEM	○
ESTABLISH ID ISSUING AUTHORITY	○
UTILITIES	
PREVENT UNAUTHORIZED ACCESS TO UTILITY AREAS	●
PROVIDE EMERGENCY POWER TO CRITICAL SYSTEMS (ALARM SYSTEMS, RADIO COMMUNICATIONS, COMPUTER FACILITIES, ETC.)	●
OCCUPANT EMERGENCY PLANS	
EXAMINE OCCUPANT EMERGENCY PLANS (OEP) AND CONTINGENCY PROCEDURES BASED ON THREATS	●
OEPs IN PLACE, UPDATED ANNUALLY, PERIODIC TESTING EXERCISE	●
ASSIGN & TRAIN OEP OFFICIALS (ASSIGNMENT BASED ON LARGEST TENANT IN FACILITY)	●
ANNUAL TENANT TRAINING	●

● REQUIRED ○ RECOMMENDED ▲ DESIRABLE

INTERIOR SECURITY, cont.	LEVEL III
DAYCARE CENTERS	
COMPARE FEASIBILITY OF LOCATING DAYCARE IN OUTSIDE LOCATIONS	●
EVALUATE WHETHER TO LOCATE DAYCARE FACILITIES IN BUILDINGS WITH HIGH THREAT ACTIVITIES	●
SECURITY PLANNING	**LEVEL III**
INTELLIGENCE SHARING	
ESTABLISH LAW ENFORCEMENT AGENCY/SECURITY LIAISONS	●
REVIEW/ESTABLISH PROCEDURE FOR INTELLIGENCE RECEIPT/DISSEMINATION	●
ESTABLISH UNIFORM SECURITY/THREAT NOMENCLATURE	●
TRAINING	
CONDUCT ANNUAL SECURITY AWARENESS TRAINING	●
ESTABLISH STANDARDIZED UNARMED GUARD QUALIFICATIONS/ TRAINING REQUIREMENTS	●
ESTABLISH STANDARDIZED ARMED GUARD QUALIFICATIONS/ TRAINING REQUIREMENTS	●
TENANT ASSIGNMENT	
CO-LOCATE AGENCIES WITH SIMILAR SECURITY NEEDS	▲
DO NOT CO-LOCATE HIGH/LOW RISK AGENCIES	▲
ADMINISTRATIVE PROCEDURES	
ESTABLISH FLEXIBLE WORK SCHEDULE IN HIGH THREAT/ HIGH RISK AREAS TO MINIMIZE EMPLOYEE VULNERABILITY TO CRIMINAL ACTIVITY	▲
ARRANGE FOR EMPLOYEE PARKING IN/NEAR BUILDING AFTER NORMAL WORK HOURS	○
CONDUCT BACKGROUND SECURITY CHECKS AND/OR ESTABLISH SECURITY CONTROL PROCEDURES FOR SERVICE CONTRACT PERSONNEL	●
CONSTRUCTION/RENOVATION	
INSTALL MYLAR FILM ON ALL EXTERIOR WINDOWS (SHATTER PROTECTION)	○
REVIEW CURRENT PROJECTS FOR BLAST STANDARDS	●
REVIEW/ESTABLISH UNIFORM STANDARDS FOR CONSTRUCTION	●
REVIEW/ESTABLISH NEW DESIGN STANDARD FOR BLAST RESISTANCE	●
ESTABLISH STREET SET-BACK FOR NEW CONSTRUCTION	○

● REQUIRED ○ RECOMMENDED ▲ DESIRABLE

Reproduced from Appendix B, *Details of Recommended Security Standards*
U.S. Department of Justice, United States Marshals Service report
Vulnerability Assessment of Federal Facilities

B.1 Perimeter Security

Parking	
Term	**Definition/Description**
CONTROL OF FACILITY PARKING	Access to government parking should be limited where possible to government vehicles and personnel. At a minimum, authorized parking spaces and vehicles should be assigned and identified.
CONTROL OF ADJACENT PARKING	Where feasible, parking areas adjacent to federal space should also be controlled to reduce the potential for threats against Federal facilities and employee exposure to criminal activity.
AVOID LEASES WHERE PARKING CANNOT BE CONTROLLED	Avoid leasing facilities where parking cannot be controlled. If necessary, relocate offices to facilities that do provide added security through regulated parking.
LEASE SHOULD PROVIDE CONTROL FOR ADJACENT PARKING	Endeavor to negotiate guard services as part of lease.
POST SIGNS AND ARRANGE FOR TOWING UNAUTHORIZED VEHICLES	Procedures should be established and implemented to alert the public to towing policies, and the removal of unauthorized vehicles.
ID SYSTEM AND PROCEDURES FOR AUTHORIZED PARKING	Procedures should be established for identifying vehicles and corresponding parking spaces (placard, decal, card key, etc.).
ADEQUATE LIGHTING FOR PARKING AREAS	Effective lighting provides added safety for employees and deters illegal or threatening activities.

Closed Circuit Television (CCTV) Monitoring	
Term	**Definition/Description**
CCTV SURVEILLANCE CAMERAS WITH TIME LAPSE VIDEO RECORDING	Twenty-four hour CCTV surveillance and recording is desirable at all locations as a deterrent. Requirements will depend on assessment of the security level for each facility. Time-lapse video recordings are also highly valuable as a source of evidence and investigative leads
POST SIGNS ADVISING OF 24 HOUR VIDEO SURVEILLANCE	Warning signs advising of twenty-four hour surveillance act as a deterrent in protecting employees and facilities.

Lighting	
Term	**Definition/Description**
LIGHTING WITH EMERGENCY POWER BACKUP	Standard safety code requirement in virtually all areas. Provides for safe evacuation of buildings in case of natural disaster, power outage, or criminal/terrorist activity.

Physical Barriers	
Term	**Definition/Description**
EXTEND PHYSICAL PERIMETER, WITH BARRIERS	This security measure will only be possible in locations where the Government controls the property and where physical constraints are not present. (barriers of concrete and/or steel composition)
PARKING BARRIERS	Desirable to prevent unauthorized vehicle access.

B.2 Entry Security

Receiving/Shipping	
Term	**Definition/Description**
REVIEW RECEIVING/SHIPPING PROCEDURES (CURRENT)	Audit current standards for package entry and suggest ways to enhance security.
IMPLEMENT RECEIVING/SHIPPING PROCEDURES (MODIFIED)	After auditing procedures for receiving/shipping, implement improved procedures for security enhancements.

Access Control	
Term	**Definition/Description**
EVALUATE FACILITY FOR SECURITY GUARD REQUIREMENTS	If security guards are required, the number of guards at any given time will depend on the size of the facility, the hours of operation, and current risk factors, etc.
SECURITY GUARD PATROL	Desirable for level I and II facilities and may be included as lease option. Level III, IV and V facilities will have security guard patrol based on facility evaluation.
INTRUSION DETECTION SYSTEM WITH CENTRAL MONITORING CAPABILITY	Desirable in Level I facilities, based on evaluation for Level II facilities, and required for Levels III, IV and V.
UPGRADE TO CURRENT LIFE SAFETY STANDARDS	Required for all facilities as part of GSA design requirements, (e.g. fire detection, fire suppression systems, etc.)

Entrances/Exits	
Term	**Definition/Description**
X-RAY AND MAGNETOMETER AT PUBLIC ENTRANCES	May be impractical for Level I and II facilities. Level III and IV evaluations would focus on tenant agencies, public interface, and feasibility. Required for Level V.
REQUIRE X-RAY SCREENING OF ALL MAIL/PACKAGES	All packages entering buliding should be subject to x-ray screening and/or visual inspection.
HIGH SECURITY LOCKS	Any exterior entrance should have a high security lock as determined by GSA specifications and/or agency requirements.

B.3 Interior Security

Employee/Visitor Identification	
Term	**Definition/Description**
AGENCY PHOTO ID FOR ALL PERSONNEL DISPLAYED AT ALL TIMES	May not be required in smaller facilities.

Employee/Visitor Identification	
Term	**Definition/Description**
VISITOR CONTROL/SECURITY SYSTEM	Visitors should be readily apparent in Level I facilities. Other facilities may ask visitors to sign-in with a receptionist or guard, or require an escort, or formal identification/badge.
VISITOR ID ACCOUNTABILITY SYSTEM	Stringent methods of control over visitor badges will ensure that visitors wearing badges have been screened and are authorized to be at the facility during the appropriate time frame.
ESTABLISH ID ISSUING AUTHORITY	Develop procedures and establish authority for issuing employee and visitor IDs.

Utilities	
Term	**Definition/Description**
PREVENT UNAUTHORIZED ACCESS TO UTILITY AREAS	Smaller facilities may not have control over utility access, or locations of utility areas. Where possible, assure that utility areas are secure and that only authorized personnel can gain entry.
PROVIDE EMERGENCY POWER TO CRITICAL SYSTEMS	Tenant agency is responsible for determining which computer and communication systems require back-up power. All alarm systems, CCTV monitoring devices, fire detection systems, entry control devices, etc. require emergency power sources. (ALARM SYSTEMS, RADIO COMMUNICATIONS, COMPUTER FACILITIES, ETC.)

Occupant Emergency Plans	
Term	**Definition/Description**
EXAMINE OCCUPANT EMERGENCY PLAN (OEP) AND CONTINGENCY PROCEDURES BASED ON THREATS	Review and update current OEP procedures for thoroughness. OEPs should reflect the current security climate.

Occupant Emergency Plans	
Term	**Definition/Description**
ASSIGN AND TRAIN OEP OFFICIALS	Assignment based on GSA requirement that largest tenant in facility maintain OEP responsibility. Officials should be assigned, trained and a contingency plan established to provide for the possible absence of OEP officials in the event of emergency activation of the OEP.
ANNUAL TENANT TRAINING	All tenants should be aware of their individual responsibilities in an emergency situation.

Day Care Center	
Term	**Definition/Description**
RE-EVALUATE CURRENT SECURITY AND SAFETY STANDARDS	Conduct a thorough review of security and safety standards.
ASSESS FEASIBILITY OF LOCATING DAY CARE WITHIN FEDERAL FACILITY	If a facility is being considered for a day care center, an evaluation should be made based on the risk factors associated with tenants and the location of the facility.

B.4 Security Planning

Intelligence Sharing	
Term	**Definition/Description**
ESTABLISH LAW ENFORCEMENT AGENCY/SECURITY LIAISONS	Intelligence sharing between law enforcement agencies and security organizations should be established in order to facilitate the accurate flow of timely and relevant information between appropriate government agencies. Agencies involved in providing security must be part of the complete intelligence process.
REVIEW/ESTABLISH PROCEDURES FOR INTELLIGENCE RECEIPT/DISSEMINATION	Determine what procedures exist to ensure timely delivery of critical intelligence. Review and improve procedures to alert agencies and specific targets of criminal/terrorist threats. Establish standard administrative procedures for response to incoming alerts. Review flow of information for effectiveness and time critical dissemination.

Intelligence Sharing	
Term	**Definition/Description**
ESTABLISH UNIFORM SECURITY/THREAT NOMENCLATURE	To facilitate communication, standardized terminology for Alert Levels should be implemented. (Normal, Low, Moderate, and High - As recommended by Security Standards Committee)

Training	
Term	**Definition/Description**
CONDUCT ANNUAL SECURITY AWARENESS TRAINING	Provide security awareness training for all tenants. At a minimum, self-study programs utilizing videos, and literature, etc. should be implemented. These materials should provide up-to-date information covering security practices, employee security awareness, and personal safety, etc.
ESTABLISH STANDARDIZED ARMED AND UNARMED GUARD QUALIFICATIONS/ TRAINING REQUIREMENTS	Requirements for these positions should be standardized government wide.

Tenant Assignment	
Term	**Definition/Description**
CO-LOCATE AGENCIES WITH SIMILAR SECURITY NEEDS	To capitalize on efficiencies and economies, agencies with like security requirements should be located in the same facility if possible.
DO NOT CO-LOCATE HIGH/LOW RISK AGENCIES	Low risk agencies should not take on additional risk by being located with high risk agencies.

Administrative Procedures	
Term	**Definition/Description**
ESTABLISH FLEXIBLE WORK SCHEDULE IN HIGH THREAT/ HIGH RISK AREA TO MINIMIZE EMPLOYEE VULNERABLITY TO CRIMINAL ACTIVITY.	Flexible work schedules can enhance employee safety by staggering reporting and departure times. As an example flexible schedules might enable employees to park closer to the facility by reducing the demand for parking at peak times of the day.
ARRANGE FOR EMPLOYEE PARKING IN/NEAR BUILDING AFTER NORMAL WORK HOURS	Minimize exposure to criminal activity by allowing employees to park at or inside the building.
CONDUCT BACKGROUND SECURITY CHECKS AND/OR ESTABLISH SECURITY CONTROL PROCEDURES FOR SERVICE CONTRACT PERSONNEL	Establish procedures to ensure security where private contract personnel are concerned. Procedures may be as simple as observation or could include sign-in/escort. Frequent visitors may necessitate a background check with contractor ID issued.

Construction/Renovation	
Term	**Definition/Description**
INSTALL MYLAR FILM ON ALL EXTERIOR WINDOWS (SHATTER PROTECTION)	Application of shatter resistant material to protect personnnel and citizens from the hazards of flying glass as a result of impact or explosion.
REVIEW CURRENT PROJECTS FOR BLAST STANDARDS	Design and construction projects should be reviewed if possible, to incorporate current technology and blast standards. Immediate review of ongoing projects may generate savings in the implementation of upgrading to higher blast standards prior to completion of construction.
REVIEW/ESTABLISH UNIFORM STANDARDS FOR CONSTRUCTION	Review, establish, and implement uniform construction standards as it relates to security considerations.

Construction/Renovation	
Term	**Definition/Description**
REVIEW/ESTABLISH NEW DESIGN STANDARD FOR BLAST RESISTANCE	In smaller facilities or those that lease space, control over design standards may not be possible. However, future site selections should attempt to locate in facilities that do meet standards. New construction of government controlled facilities should review, establish, and implement new design standards for blast resistance.
ESTABLISH STREET SET-BACK FOR NEW CONSTRUCTION	Every foot between a potential bomb and a building will dramatically reduce damage and increase the survival rate. Street set-back is always desirable, but should be used in conjunction with barriers in Level IV and V facilities.

Excerpted from Appendix C, *Classification Table*
U.S. Department of Justice, United States Marshals Service report
Vulnerability Assessment of Federal Facilities

LEVEL	TYPICAL LOCATION
III	Agency Mix: Government Records

[64 FR 67648, Dec. 2, 1999]

APPENDIX B TO PART 1228—ALTERNATIVE CERTIFIED FIRE-SAFETY DETECTION AND SUPPRESSION SYSTEM(S)

1. *General.* This Appendix B contains information on the Fire-safety Detection and Suppression System(s) tested by NARA through independent live fire testing that are certified to meet the requirement in §1228.230(s) for storage of Federal Records. Use of a system specified in this appendix is optional. A facility may choose to have an alternate fire-safety detection and suppression system approved under §1228.242.

2. *Specifications for NARA facilities using 15 foot high records storage.* NARA fire-safety systems that incorporate all components specified in paragraphs 2.a. through o. of this appendix have been tested and certified to meet the requirements in §1228.230(s) for an acceptable fire-safety detection and suppression system for storage of Federal records.

a. The records storage height must not exceed the nominal 15 feet (+/−3 inches) records storage height.

b. All records storage and adjoining areas must be protected by automatic wet-pipe sprinklers. Automatic sprinklers are specified herein because they provide the most effective fire protection for high piled storage of paper records on open type shelving.

c. The sprinkler system must be rated at no higher than 285 degrees Fahrenheit utilizing quick response (QR) fire sprinkler heads and designed by a licensed fire protection engineer to provide the specified density for the most remote 1,500 square feet of floor area at the most remote sprinkler head in accordance with NFPA 13 (1996), Standard for the Installation of Sprinkler Systems. For facilities with roofs rated at 15 minutes or greater, provide ½″ QR sprinklers rated at no higher than 285 degrees Fahrenheit designed to deliver a density of 0.30 gpm per square foot. For unrated roofs, provide 0.64″ QR "large drop" sprinklers rated at no higher than 285 degrees Fahrenheit. For facilities using 7 or 8 shelf track files, use QR sprinklers rated at no higher than 285 degrees Fahrenheit. For new construction and replacement sprinklers, NARA recommends that the sprinklers be rated at 165 degrees

Fahrenheit. Installation of the sprinkler system must be in accordance with NFPA 13 (1996), Standard for the Installation of Sprinkler Systems.

d. Maximum spacing of the sprinkler heads must be on a 10-foot grid and the positioning of the heads must provide complete, unobstructed coverage, with a clearance of not less than 18 inches from the top of the highest stored materials.

e. The sprinkler system must be equipped with a water-flow alarm connected to an audible alarm within the facility and to a continuously staffed fire department or an Underwriters Laboratory approved central monitoring station (see UL 827, Central-Station Alarm Services (April 23, 1999)) with responsibility for immediate response.

f. A manual fire alarm system must be provided with a Underwriters Laboratory approved (grade A) central monitoring station service or other automatic means of notifying the municipal fire department. A manual alarm pull station must be located adjacent to each exit. Supplemental manual alarm stations are permitted within the records storage areas.

g. All water cutoff valves in the sprinkler system must be equipped with automatic closure alarm (tamper alarm) connected to a continuously staffed station, with responsibility for immediate response. If the sprinkler water cutoff valve is located in an area used by the public, in addition to the tamper alarm, the valves must be provided with frangible (easily broken) padlocks.

h. A dependable water supply free of interruption must be provided including a continuous site fire loop connected to the water main and sized to support the facility with only one portion of the fire loop operational. This normally requires a backup supply system having sufficient pressure and capacity to meet both fire hose and sprinkler requirements for 2-hours. A fire pump connected to an emergency power source must be provided in accordance with NFPA 20 (1996), Standard for the Installation of Centrifugal Fire Pumps, when adequate water pressure is not assured. In the event that public water mains are not able to supply adequate volumes of water to the site, on-site water storage must be provided.

i. Interior fire hose stations equipped with a 1½ inch diameter hose may be provided in the records storage areas if required by the local fire department, enabling any point in the records storage area to be reached by a 50-foot hose stream from a 100-foot hose lay. If provided, these cabinets must be marked ''For Fire Department Use Only.''

j. Where fire hose cabinets are not required, fire department hose outlets must be provided at each floor landing in the building core or stair shaft. Hose outlets must have an easily removable adapter and cap. Threads and valves must be compatible with the local fire department's equipment. Spacing must be so that any point in the record storage area can be reached with a 50-foot hose stream from a 100-foot hose lay.

k. In addition to the designed sprinkler flow demand, 500 gpm must be provided for hose stream demand. The hose stream demand must be calculated into the system at the base of the main sprinkler riser.

l. Fire hydrants must be located within 250 feet of each exterior entrance or other access to the records storage facility that could be used by firefighters. Each required hydrant must provide a minimum flow capacity of 500 gpm at 20 psi. All hydrants must be at least 50 feet away from the building walls and adjacent to a roadway usable by fire apparatus. Fire hydrants must have at least two, 2½ inch hose outlets and a pumper connection. All threads must be compatible with local standards.

m. Portable water-type fire extinguishers (2½ gallon stored pressure type) must be provided at each fire alarm striking station. The minimum number and locations of fire extinguishers must be as required by NFPA 10 (1994), Standard for Portable Fire Extinguishers.

n. Single level catwalks without automatic sprinklers installed underneath may be provided in the service aisles if the edges of all files in the front boxes above the catwalks are stored perpendicular to the aisle (to minimize files exfoliation in a fire). Where provided, the walking surface of the catwalks must be of expanded metal at least .09-inch thickness with a 2-inch mesh length. The surface opening ratio must be equal or greater than 0.75. The sprinkler water demand for protection over bays with catwalks where records above the catwalks are not perpendicular to the aisles must be calculated hydraulically to give .30 gpm per square foot for the most remote 2,000 square feet.

[64 FR 67660, Dec. 2, 1999]

PART 1230—MICROGRAPHIC RECORDS MANAGEMENT

Subpart A—General

Sec.
1230.1 What does this part cover?
1230.2 What is the authority for this part?
1230.3 Publications incorporated by reference.
1230.4 Definitions.

Subpart B—Program Requirements

1230.7 What must agencies do to manage microform records?

Subpart C—Microfilming Standards

1230.10 Do agencies need to request NARA approval for the disposition of all microform and source records?
1230.12 What are the steps to be followed in filming records?
1230.14 What are the filming requirements for permanent and unscheduled records?
1230.16 What are the film and image requirements for temporary records, duplicates, and user copies?

Subpart D—Storage, Use and Disposition Standards of Microform Records

1230.20 How should microform records be stored?
1230.22 What are NARA inspection requirements for permanent and unscheduled microform records?
1230.24 What are NARA inspection requirements for temporary microform records?
1230.26 What are the use restrictions for permanent and unscheduled microform records?
1230.28 What must agencies do to send permanent microform records to a records storage facility?
1230.30 How do agencies transfer permanent microform records to the legal custody of the National Archives?

Subpart E—Centralized Micrographic Services

1230.50 What micrographic services are available from NARA?

AUTHORITY: 44 U.S.C. 2907, 3302 and 3312.

SOURCE: 67 FR 31693, May 9, 2002; 67 FR 39473, June 7, 2002, unless otherwise noted.

Subpart A—General

§ 1230.1 What does this part cover?

This part covers the standards and procedures for using micrographic technology to create, use, store, inspect, retrieve, preserve, and dispose of Federal records.§ 1230.2 What is the authority for this part?

44 U.S.C. chapters 29 and 33, authorize the Archivist of the United States to:

(a) Establish standards for copying records by photographic and microphotographic means;

(b) Establish standards for the creation, storage, use, and disposition of microform records in Federal agencies; and

(c) Provide centralized microfilming services for Federal agencies.

§ 1230.2 What is the authority for this part?

44 U.S.C. chapters 29 and 33, authorize the Archivist of the United States to:

(a) Establish standards for copying records by photographic and microphotographic means;

(b) Establish standards for the creation, storage, use, and disposition of microform records in Federal agencies; and

(c) Provide centralized microfilming services for Federal agencies.

§ 1230.3 Publications incorporated by reference.

(a) *General*. The following publications are hereby incorporated by reference into Part 1230. They are available from the issuing organizations at the addresses listed in this section. They may also be examined at the Office of the Federal Register, 800 North Capitol Street NW, suite 700, Washington, DC. This incorporation by reference was approved by the Director of the Federal Register in accordance with 5 U.S.C. 552(a) and 1 CFR Part 51. These materials are incorporated as they exist on the date of approval, and a notice of any change in these materials will be published in the **Federal Register**.

(b) *American National Standards Institute (ANSI) and International (ISO) standards*. ANSI standards cited in this part are available from the American National Standards Institute, 25 West 43rd St., 4th Floor, New York, NY 10036. The standards can be ordered on line at http://webstore.ansi.org/ansidocstore/default.asp.

ISO 10602:1995(E), February 1, 1995, Second edition, Photography–Processed silver-gelatin type black-and-white film–Specifications for stability.

ANSI/PIMA IT9.2–1998, April 15, 1998, American National Standard for Imaging Materials—Photographic Processed Films, Plates, and Papers—Filing Enclosures and Storage Containers.

ANSI/ISO 5.2-1991, ANSI/NAPM IT2.19–1994, February 20, 1995, American National Standard for Photography—Density Measurements—Part 2: Geometric Conditions for Transmission Density.

ANSI/ISO 5-3-1995, ANSI/NAPM IT2.18–1996, March 8, 1996, American National Standard for Photography—Density Measurements—Part 3: Spectral Conditions.

ISO 18911: 2000(E), First edition, November 1, 2000, Imaging materials–Processed safety photographic films—Storage practices.

(c) *Association of Information and Image Management (AIIM) Standards.* You may obtain the following standards from the Association of Information and Image Management, 1100 Wayne Avenue, suite 1100, Silver Spring, MD 20910. The standards can be ordered on line at http://www.aiim.org/ .

ANSI/AIIM MS1–1996, August 8, 1996, Standard Recommended Practice for Alphanumeric Computer-Output Microforms—Operational Practices for Inspection and Quality Control.

ANSI/AIIM MS5–1992, December 21, 1992, Standard for Information and Image Management–Microfiche.

ANSI/AIIM MS14–1996, August 8, 1996, Standard Recommended Practice–Specifications for 16mm and 35mm Roll Microfilm.

ANSI/AIIM MS19–1993, August 18, 1993, Standard Recommended Practice–Identification of Microforms.

ANSI/AIIM MS23–1998, June 2, 1998, Standard Recommended Practice–Production, Inspection, and Quality Assurance of First-Generation, Silver Microforms of Documents.

ANSI/AIIM MS32–1996, February 16, 1996, Standard Recommended Practice–Microrecording of Engineering Source Documents on 35mm Microfilm.

ANSI/AIIM MS41–1996, July 16, 1996, Dimensions of Unitized Microfilm Carriers and Apertures (Aperture, Camera, Copy and Image Cards).

ANSI/AIIM MS43–1998, June 2, 1998, Standard Recommended Practice–Operational Procedures–Inspection and Quality Control of Duplicate Microforms of Documents and From COM.

ANSI/AIIM MS45–1990, January 22, 1990, Recommended Practice for Inspection of Stored Silver-Gelatin Microforms for Evidence of Deterioration.

ANSI/ISO 3334–1991, ANSI/AIIM MS51–1991, May 10, 1991, Micrographics—ISO Resolution Test Chart No. 2—Description and Use.

§ 1230.4 Definitions.

The following definitions apply to this part:

Archival microfilm. A photographic film that meets the standards described in § 1230.14 and that is suitable for the preservation of permanent records when stored in accordance with § 1230.20(a). Such film must conform to film designated as LE 500 in ANSI/NAPM IT9.1–1996.

Background density. The opacity of the area of the microform not containing information.

Computer-assisted retrieval (CAR) system. A records storage and retrieval system, normally microfilm-based, that uses a computer for indexing, automatic markings such as blips or bar codes for identification, and automatic devices for reading those markings and, in some applications, for transporting the film for viewing.

Computer Output Microfilm (COM). Microfilm containing data converted and recorded from a computer.

Facility. An area used exclusively to make or copy microforms.

Microfilm. (1)Raw (unexposed and unprocessed) fine-grain, high resolution photographic film with characteristics that make it suitable for use in micrographics;

(2) The process of recording microimages on film; or

(3) A fine-grain, high resolution photographic film containing microimages.

Microform. Any form containing microimages.

Microimage. A document such as a page of text or a drawing that is too small to be read without magnification.

Permanent record. Permanent record has the meaning specified in § 1220.14 of this chapter.

Records storage facility. Records storage facility has the meaning specified in § 1220.14 of this chapter.

Temporary record. Temporary record has the meaning specified in § 1220.14 of this chapter.

Unscheduled record. Unscheduled record has the meaning specified in § 1220.14 of this chapter.

Use or work copies. Duplicates of original film made to be used for reference or for duplication on a recurring or large-scale basis. These are not preservation master copies, which must be stored unused as specified in § 1230.20.

Subpart B—Program Requirements

§ 1230.7 What must agencies do to manage microform records?

Federal agencies must manage microform records by taking the following actions:

(a) Assign responsibility for an agencywide program for managing microform records and notify the National Archives and Records Administration (NWM), 8601 Adelphi Rd., College Park, MD 20740-6001 of the name and title of the person assigned the responsibility.

(b) Manage the microform records as part of other records and information resources management programs of the agency.

(c) Include microform records management objectives, responsibilities, and authorities in pertinent agency directives and disseminate them to appropriate officials.

(d) Address records management issues, including disposition, before approving new microform records systems or enhancements to existing systems.

(e) Train the managers and users of microform records.

(f) Develop records schedules covering microform records and finding aids, secure NARA approval, and apply the disposition instructions.

(g) Schedule computerized indexes associated with microform records, such as in a computer-assisted retrieval (CAR) system, in accordance with part 1234 of this chapter.

(h) Review practices used to create and manage microform records periodically to ensure compliance with NARA standards in this part.

Subpart C—Microfilming Standards

§ 1230.10 Do agencies need to request NARA approval for the disposition of all microform and source records?

(a) *Permanent or unscheduled records.* Agencies must schedule both source documents (originals) and microforms. NARA must approve the schedule, Standard Form (SF) 115, Request for Records Disposition Authority, in accordance with part 1228 of this chapter before any records, including source documents, can be destroyed. NARA will not approve the destruction of original records that have intrinsic value, or security classified or otherwise restricted original records that are scheduled as permanent, or original records that are scheduled as permanent and that have other characteristics that would limit the usefulness of microform copies for public reference.

(1) Agencies that comply with the standards in § 1230.14 must include on the SF 115 the following certification: ''This certifies that the records described on this form were (or will be) microfilmed in accordance with the standards set forth in 36 CFR part 1230.''

(2) Agencies using microfilming methods, materials, and procedures that do not meet the standards in § 1230.14(a) must include on the SF 115 a description of the system and standards used.

(3) When an agency intends to retain the silver original microforms of permanent records and destroy the original records, the agency must certify in writing on the SF 115 that the microform will be stored in compliance with the standards of § 1230.20 and inspected as required by § 1230.22.

(b) *Temporary records.* Agencies do not need to obtain additional NARA approval when destroying scheduled temporary records that have been microfilmed. The same approved retention period for temporary records is applied to microform copies of these records.

The original records can be destroyed once microfilm is verified, unless legal requirements prevent their early destruction.

§ 1230.12 What are the steps to be followed in filming records?

(a) Ensure that the microforms contain all information shown on the originals and that they can be used for the purposes the original records served.

(b) Arrange, describe, and index the filmed records to permit retrieval of any particular document or component of the records. Title each microform roll or fiche with a titling target or header. For fiche, place the titling information in frame 1 if the information will not fit on the header. At a minimum, titling information must include:

(1) The title of the records;

(2) The number or identifier for each unit of film;

(3) The security classification, if any; and

(4) The name of the agency and organization the inclusive dates, names, or other data identifying the records to be included on a unit of film.

(c) Add an identification target showing the date of filming. When necessary to give the film copy legal standing, the target must also identify the person who authorized the microfilming. See ANSI/AIIM MS19–1993 for standards for identification targets.

(d) The following formats are mandatory standards for microforms:

(1) *Roll film.* (i)*Source documents.* The formats described in ANSI/AIIM MS14–1996 must be used for microfilming source documents on 16mm and 35mm roll film. A reduction ratio no greater than 1:24 is recommended for typewritten or correspondence types of documents. See ANSI/AIIM MS23–1998 for the appropriate reduction ratio and format for meeting the image quality requirements. When microfilming on 35mm film for aperture card applications, the format dimensions in ANSI/AIIM MS32–1996, Table 1 are mandatory, and the aperture card format ''D Aperture'' shown in ANSI/AIIM MS41–1996, Figure 1, must be used. The components of the aperture card, including the paper and adhesive, must conform to the requirements of ANSI/PIMA IT9.2–1998. The 35mm film used in the aperture card application must conform to film designated as LE 500 in ANSI/NAPM IT9.1–1996.

(ii) *COM.* Computer output microfilm (COM) generated images must be the simplex mode described in ANSI/AIIM MS14–1996 at an effective ratio of 1:24 or 1:48 depending upon the application.

(2) *Microfiche.* For microfilming source documents or computer generated information (COM) on microfiche, the formats and reduction ratios prescribed in ANSI/AIIM MS5–1992 (R1998) must be used as specified for the size and quality of the documents being filmed. See ANSI/AIIM MS23–1998 for determining the appropriate reduction ratio and format for meeting the image quality requirements.

(e) *Index placement.* (1) *Source documents.* When filming original (source) documents, place indexes, registers, or other finding aids, if microfilmed, either in the first frames of the first roll of film or in the last frames of the last roll of film of a series. For microfiche, place them in the last frames of the last microfiche or microfilm jacket of a series.

(2) *COM.* Place indexes on computer-generated microforms following the data on a roll of film or in the last frames of a single microfiche, or the last frames of the last fiche in a series. Other index locations may be used only if dictated by special system constraints.

§ 1230.14 What are the filming requirements for permanent and unscheduled records?

(a) *General requirements.* (1) Apply the standards in this section for microfilming of:

(i) Permanent paper records where the original paper record will be destroyed or otherwise disposed of;

(ii) Unscheduled paper records where the original paper record will be destroyed or otherwise disposed of; and

(iii) Permanent and unscheduled original microform records (no paper originals) produced by automation, such as computer output microfilm (COM).

(2) Do not destroy permanent or unscheduled paper records after microfilming without authorization from NARA on a SF 115 (see § 1230.10(a)).

(b) *Film stock standards.* Polyester-based silver gelatin type film that conforms to ANSI/NAPM IT9.1—1996 for LE 500 film must be used in all applications.

(c) *Processing standards.* Microforms must be processed so that the residual thiosulfate ion concentration will not exceed 0.014 grams per square meter in accordance with ANSI/NAPM IT9.1–1996. Follow processing procedures in ANSI/AIIM MS1–1996 and MS23–1998.

(d) *Quality standards.* (1) *Resolution.* (i) *Source documents.* Determine minimum resolution on microforms of source documents using the method in the Quality Index Method for determining resolution and anticipated losses when duplicating, as described in ANSI/AIIM MS23–1998 and MS43–1998. Perform resolution tests using a ISO 3334-1991 Resolution Test Chart or a commercially available certifiable target manufactured to comply with this standard, and read the patterns following the instructions of ISO 3334–1991. Use the smallest character used to display information to determine the height used in the Quality Index formula. A Quality Index of five is required at the third generation level.

(ii) *COM.* Computer output microforms (COM) must meet the requirements of ANSI/AIIM MS1–1996.

(2) *Background density of images.* The background ISO standard visual diffuse transmission density on microforms must be appropriate to the type of documents being filmed. The procedure for density measurement is described in ANSI/AIIM MS23–1998. The densitometer must meet with ANSI/NAPM IT2.18–1996, for spectral conditions and ANSI/NAPM IT2.19–1994, for geometric conditions for transmission density.

(i) Recommended visual diffuse transmission background densities for images of documents are as follows:

Classification	Description of document	Background density
Group 1	High-quality, high contrast printed book, periodicals, and black typing.	1.3–1.5
Group 2	Fine-line originals, black opaque pencil writing, and documents with small high contrast printing.	1.15–1.4
Group 3	Pencil and ink drawings, faded printing, and very small printing, such as footnotes at the bottom of a printed page.	1.0–1.2

Classification	Description of document	Background density
Group 4	Low-contrast manuscripts and drawing, graph paper with pale, fine-colored lines; letters typed with a worn ribbon; and poorly printed, faint documents.	0.8–1.0
Group 5	Poor-contrast documents (special exception).	0.7–0.85

(ii) Recommended visual diffuse transmission densities for computer generated images are as follows:

Film Type	Process	Density Measurement Method	Min. Dmax[1]	Max. Dmin[1]	Minimum Density Difference
Silver gelatin	Conventional	Printing or diffuse	0.75	0.15	0.60
Silver gelatin	Full reversal	Printing	1.50	0.20	1.30

[1]Character or line density, measured with a microdensitometer or by comparing the film under a microscope with an image of a known density.

(3) *Base plus fog density of films.* The base plus fog density of unexposed, processed films must not exceed 0.10. When a tinted base film is used, the density will be increased. The difference must be added to the values given in the tables in paragraph (d)(2) of this section.

(4) *Line or stroke width.* Due to optical limitations in most photographic systems, film images of thin lines appearing in the original document will tend to fill in as a function of their width and density. Therefore, as the reduction ratio of a given system is increased, reduce the background density as needed to ensure that the copies will be legible.

§ 1230.16 What are the film and image requirements for temporary records, duplicates, and user copies?

(a) *Temporary records with a retention period over 99 years.* Follow the film and image requirements in § 1230.14.

(b) *Temporary records to be kept for less than 100 years.* NARA does not require the use of specific standards. Select a film stock that meets agency needs and ensures the preservation of the

microforms for their full retention period. Consult appropriate ANSI standards, available as noted in § 1230.3, or manufacturer's instructions for processing microfilm of these temporary records. Follow the manufacturer's recommendations for production and maintenance of temporary microfilm to ensure that the image is accessible and usable for the entire retention period.

Subpart D—Storage, Use and Disposition Standards for Microform Records

§ 1230.20 How should microform records be stored?

(a) *Permanent and unscheduled records.* Store permanent and unscheduled microform records under the extended term storage conditions specified in ISO 18911:2000 and ANSI/PIMA IT9.2–1998, except that the relative humidity of the storage area must be a constant 35 percent RH, plus or minus 5 percent. Do not store non-silver copies of microforms in the same storage area as silver gelatin originals or duplicate copies.

(b) *Temporary records.* Store temporary microform records under conditions that will ensure their preservation for their full retention period. Agencies may consult Life Expectance (LE) guidelines in ANSI/AIIM standards (see § 1230.3 for availability) for measures that can be used to meet retention requirements.

§ 1230.22 What are NARA inspection requirements for permanent and unscheduled microform records?

(a) Agencies must inspect, or arrange to pay a contractor or NARA to inspect the following categories of microform records stored at the agency, at a commercial records storage facility, or at a NARA records center following the inspection requirements in paragraph (b) of this section:

(1) Master films of permanent records microfilmed in order to dispose of the original records;

(2) Master films of permanent records originally created on microfilm;

(3) Other master films scheduled for transfer to the National Archives; and

(4) Master films of unscheduled records.

(b) The films listed in paragraph (a) of this section must be inspected initially in accordance with ANSI/AIIM MS45—1990. All films must be inspected when they are 2 years old. After the initial 2-year inspection, unless there is a catastrophic event, the films must be inspected as follows until legal custody is transferred to the National Archives and Records Administration:

(1) For microfilm that is/was produced after 1990, inspect the microfilm every 5 years.

(2) For microfilm that was produced prior to 1990, inspect the microfilm every 2 years.

(c) To facilitate inspection, the agency must maintain an inventory of microfilm listing each microform series/publication by production date, producer, processor, format, and results of previous inspections.

(d) The elements of the inspection shall consist of:

(1) An inspection for aging blemishes following ANSI/AIIM MS45–1990;

(2) A rereading of resolution targets;

(3) A remeasurement of density; and

(4) A certification of the environmental conditions under which the microforms are stored, as specified in § 1230.20(a).

(e) The agency must prepare an inspection report, and send a copy to NARA in accordance with § 1230.28(b). The inspection report must contain:

(1) A summary of the inspection findings, including:

(i) A list of batches by year that includes the identification numbers of microfilm rolls and microfiche in each batch;

(ii) The quantity of microforms inspected;

(iii) An assessment of the overall condition of the microforms;

(iv) A summary of any defects discovered, e.g., redox blemishes or base deformation; and

(v) A summary of corrective action taken.

(2) A detailed inspection log created during the inspection that contains the following information:

(i) A complete description of all records inspected (title; roll or fiche number or other unique identifier for

each unit of film inspected; security classification, if any; and inclusive dates, names, or other data identifying the records on the unit of film);

(ii) The date of inspection;

(iii) The elements of inspection (see paragraph (a)(4) of this section);

(iv) Any defects uncovered; and

(v) The corrective action taken.

(f) If an inspection shows that a master microform is deteriorating, the agency must make a silver duplicate in accordance with § 1230.14 to replace the deteriorating master. The duplicate film will be subject to the inspection requirements (see § 1230.22) before transfer to a record center or to the National Archives.

(g) Inspection must be performed in an environmentally controlled area in accordance with ANSI/AIIM MS45–1990.

§ 1230.24 What are NARA inspection requirements for temporary microform records?

NARA recommends, but does not require, that agencies use the inspection by sampling procedures described in § 1230.22(a) and (b).

§ 1230.26 What are the use restrictions for permanent and unscheduled microform records?

(a) Do not use the silver gelatin original microform or duplicate silver gelatin microform of permanent or unscheduled records created in accordance with § 1230.14 of this part (archival microform) for reference purposes. Agencies must ensure that the archival microform remains clean and undamaged during the process of making a duplicating master.

(b) Use duplicates for:

(1) Reference;

(2) Further duplication on a recurring basis;

(3) Large-scale duplication; and

(4) Distribution of records on microform.

(c) Agencies retaining the original record in accordance with an approved records disposition schedule may apply agency standards for the use of microform records.

§ 1230.28 What must agencies do to send permanent microform records to a records storage facility?

(a) Follow the procedures in part 1228, subpart I, of this chapter and the additional requirements in this section.

(b) Package non-silver copies separately from the silver gelatin original or silver duplicate microform copy and clearly label them as non-silver copies.

(c) Include the following information on the transmittal (SF 135 for NARA records centers), or in an attachment to the transmittal. For records sent to an agency records center or commercial records storage facility, submit this information to NARA as part of the documentation required by § 1228.154(c)(2) of this chapter:

(1) Name of the agency and program component;

(2) The title of the records and the media/format used;

(3) The number or identifier for each unit of film;

(4) The security classification, if any;

(5) The inclusive dates, names, or other data identifying the records to be included on a unit of film;

(6) Finding aids that are not contained in the microform; and

(7) The inspection log forms and inspection reports required by § 1230.22(a)(5) and (6).

(d) Agencies may transfer permanent microform records to a records storage facility meeting the storage requirements in § 1230.20(a) (see § 1228.152(e)(3) of this chapter for NARA centers) only after the first inspection or with certification that the microforms will be inspected by the agency, an agency contractor, or a NARA records center (on a reimbursable basis) when the microforms become 2 years old.

§ 1230.30 How do agencies transfer permanent microform records to the legal custody of the National Archives?

(a) Follow the procedures in part 1228, subpart L, of this chapter and the additional requirements in this section.

(b) Originate the transfer by submitting an SF 258, Agreement to Transfer Records to the National Archives of

the United States, unless otherwise instructed by NARA.

(c) If the records are not in a NARA records center, submit the information specified in § 1230.28(c).

(d) Transfer the silver gelatin original (or duplicate silver gelatin microform created in accordance with § 1230.14) plus one microform copy.

(e) Ensure that the inspection of the microform is up-to-date. If the microform records were recently produced, please note that NARA will not accession permanent microform records until the first inspection (when the microforms are 2 years old) has been performed.

(f) Package non-silver copies separately from the silver gelatin original or silver duplicate microform copy and clearly label them as non-silver copies.

Subpart E—Centralized Micrographic Services

§ 1230.50 What micrographic services are available from NARA?

Some NARA records centers provide reimbursable microfilming services, including preparing, indexing, and filming of records, inspection of film, and labeling of film containers. Agencies desiring microfilming services from NARA should contact the Office of Regional Records Services (NR), 8601 Adelphi Rd., College Park, MD 20740-6001, or the director of the NARA records center serving the agency's records (see § 1228.150(a) of this chapter). The fees for microfilming services will appear in NARA bulletins, which are available on NARA's web site at http://www.nara.gov/records/policy/bulletin.html or from the Modern Records Programs (NWM), 8601 Adelphi Road, College Park, MD 20740-6001.

PART 1232—AUDIOVISUAL RECORDS MANAGEMENT

Subpart A—General

Sec.
1232.1 Applicability and scope.
1232.2 Objectives.
1232.10 Definitions.

Subpart B—Audiovisual Records Management

1232.20 Agency program responsibilities.
1232.22 Nitrocellulose film.
1232.24 Unstable cellulose-acetate film.
1232.26 Storage conditions.
1232.28 Maintenance and operations.
1232.30 Choosing formats.
1232.32 Disposition.

AUTHORITY: 44 U.S.C. 2904 and 3101; and OMB Circular A–130.

SOURCE: 61 FR 32337, June 24, 1996, unless otherwise noted.

Subpart A—General

§ 1232.1 Applicability and scope.

This part prescribes policies and procedures for managing audiovisual records to ensure adequate and proper documentation and authorized, timely, and appropriate disposition.

§ 1232.2 Objectives.

The objectives of audiovisual records management are to achieve the effective creation, maintenance, use, and disposition of audiovisual and related records by establishing standards for maintenance and disposition, physical security, and preservation and by reviewing recordkeeping practices on a continuing basis to improve procedures.

§ 1232.10 Definitions.

For the purposes of this part, the following definitions shall apply (see also § 1220.14 of this chapter for other definitions).

Audiovisual. Any pictorial or aural means of communicating information.

Audiovisual equipment. Equipment used for recording, producing, duplicating, processing, broadcasting, distributing, storing or exhibiting audiovisual materials or for providing any audiovisual services.

Audiovisual production. An organized and unified presentation, developed according to a plan or script, containing visual imagery, sound, or both, and used to convey information. An audiovisual production generally is a self-contained presentation. Audiovisual productions may include motion media with synchronous sound such as motion picture film, videotape or other

video formats, audio recordings, and other media such as synchronized audio and visual presentations such as multimedia productions.

Audiovisual records. Records in pictorial or aural form that include still and motion media, sound recordings, graphic works, mixed media, and related finding aids and production files.

Subpart B—Audiovisual Records Management

§ 1232.20 Agency program responsibilities.

Each Federal agency, in providing for effective controls over the creation of records, shall establish an appropriate program for the management of audiovisual records. This program shall be governed by the following requirements:

(a) Prescribe the types of records to be created and maintained so that audiovisual activities and their products are properly documented. (Regulations on the appropriate types of permanent audiovisual records are located in § 1228.266 of this chapter.)

(b) Ensure that adequate training is provided to:

(1) Agency personnel responsible for the disposition of audiovisual records;

(2) Contractor personnel who have temporary custody of audiovisual records; and,

(3) All users who create, handle, or maintain audiovisual records or operate equipment for their use.

(c) Ensure that contract provisions protect the Government's legal title and control over audiovisual records and related documentation produced or maintained by contract. Ensure that contract provisions identify as deliverables any working papers/files that are needed for adequate and proper documentation. Include a provision that permits the Government to inspect contractor facilities used for the storage and handling of permanent or unscheduled audiovisual records. Agencies shall inspect such facilities at least once each year.

(d) Keep inventories indicating the location of all generations of audiovisual records, whether in agency storage or in another facility such as a laboratory or library distribution center.

(e) Schedule disposition of all audiovisual records as soon as practicable after creation. General Records Schedule 21 provides mandatory disposal authorization for temporary audiovisual records common to most Federal offices. Agencies must submit an SF 115, Request for Records Disposition Authority, to NARA to obtain authorization for the disposition of all other audiovisual records. The schedules covering permanent records must specify the different record elements identified in § 1228.266, and must always include related finding aids.

(f) Periodically review agency audiovisual recordkeeping practices for conformance with requirements and take necessary corrective action.

[61 FR 32337, June 24, 1996, as amended at 66 FR 27027, May 16, 2001]

§ 1232.22 Nitrocellulose film.

Nitrocellulose-base film once used in the manufacture of sheet film and motion pictures may be occasionally found in records storage areas. The nitrocellulose base, a substance akin to gun cotton, is chemically unstable and highly inflammable.

(a) Agencies must remove nitrocellulose film materials from records storage areas.

(b) Agencies must immediately notify NARA about the existence of nitrocellulose film materials because of their age and instability. NARA will determine if they may be destroyed or destroyed after a copy is made for transfer, as appropriate.

(c) If NARA appraises nitrate film materials as disposable, but the agency wishes to retain them, agencies must follow the guidance in NFPA 40–1994, Standard for the Storage and Handling of Cellulose Nitrate Motion Picture Film, which is incorporated by reference. NFPA 40–1994 is available from the National Fire Protection Association, Batterymarch Park, Quincy, MA 02269. This standard is also available for inspection at the Office of the Federal Register, 800 North Capitol Street, NW., suite 700, Washington, D.C. This incorporation by reference was approved by the Director of the Federal Register in accordance with 5 U.S.C. 552(a) and 1 CFR part 51. These materials are incorporated by reference as

they exist on the date of approval and a notice of any change in these materials will be published in the FEDERAL REGISTER.

(d) The packing and shipping of nitrate film are governed by the following Department of Transportation regulations: 49 CFR 172.101, Hazardous materials table; 172.504, Transportation; 173.24, Standard requirements for all packages; and 173.177, Motion picture film and X- ray film—nitrocellulose base.

§ 1232.24 Unstable cellulose-acetate film.

Cellulose-acetate film, also known as safety film, is nonflammable and does not represent the same degree of hazard as nitrate film materials. Nonetheless, cellulose-acetate film also deteriorates over time. Temperature, humidity, harmful storage enclosures, and gaseous products influence the rate of deterioration. Agencies shall inspect cellulose-acetate film periodically for an acetic odor, wrinkling, or the presence of crystalline deposits on the edge or surface of the film that indicate deterioration. Agencies shall notify NARA within 30 days after inspection about deteriorating permanent or unscheduled audiovisual records composed of cellulose acetate so that they can be copied.

§ 1232.26 Storage conditions.

Agencies must:

(a) Provide audiovisual records storage facilities that are secure from unauthorized access and make them safe from fire, water, flood, chemical or gas damage and from other harmful conditions. See NFPA 232A–1995, Guide for Fire Protection for Archives and Records Centers issued by the National Fire Protection Association, which is incorporated by reference. The standard is available from the National Fire Protection Association, Batterymarch Park, Quincy, MA 02269. This standard is also available for inspection at the Office of the Federal Register, 800 North Capitol Street, NW., suite 700, Washington, D.C. This incorporation by reference was approved by the Director of the Federal Register in accordance with 5 U.S.C. 552(a) and 1CFR part 51. These materials are incorporated by reference as they exist on the date of approval and a notice of any change in these materials will be published in the FEDERAL REGISTER.

(b) Maintain good ambient storage conditions for permanent or unscheduled audiovisual records. Generally, the temperature should not exceed 70 degrees Fahrenheit and relative humidity should be maintained between 30–40% and not exceed 50%. Avoid fluctuating temperatures and humidity. Cooler temperatures and lower relative humidity are recommended for the storage of all film, to prolong the useful life of the film base and image. Cold temperatures combined with 30–35% relative humidity are especially recommended to retard the fading of color film. Optimal environmental conditions are stated in ANSI/NAPM IT9.11–1993, Imaging Media— Processed Safety Photographic Films—Storage. If possible store all permanently scheduled records in these conditions, and schedule them to be transferred to the National Archives as soon as possible.

(c) For the storage of permanent or unscheduled records, use audiovisual storage containers or enclosures made of noncorroding metal, inert plastics, paper products and other safe materials recommended and specified in ANSI standards: ANSI/NAPM IT9.11–1993, Imaging Media—Processed Safety Photographic Films—Storage; and ANSI IT9.2–1991, Imaging Media—Photographic Processed Films, Plates, and Papers—Filing Enclosures and Storage Containers. These standards, which are incorporated by reference, are available from the American National Standards Institute (ANSI), Inc., 11 West 42nd Street, New York, NY 10036. These standards are also available for inspection at the Office of the Federal Register, 800 North Capitol Street, NW., suite 700, Washington, D.C. This incorporation by reference was approved by the Director of the Federal Register in accordance with 5 U.S.C. 552(a) and 1 CFR part 51. These materials are incorporated by reference as they exist on the date of approval and a notice of any change in these materials will be published in the FEDERAL REGISTER.

(d) Store originals and use copies (e.g., negatives and prints) separately, whenever practicable.

(e) Store series of permanent and unscheduled x-ray films in accordance with this section, and store series of temporary x-ray films under conditions that will ensure their preservation for their full retention period, in accordance with ANSI/NAPM IT9.11–1993, Imaging Media—Processed Safety Photographic Films—Storage. This requirement does not apply to x-rays that are interspersed among paper records, as in case files.

§ 1232.28 Maintenance and operations.

Agencies must:

(a) Handle audiovisual records in accordance with commonly accepted industry practices because of their extreme vulnerability to damage. For further information, consult the American National Standards Institute (ANSI), Inc., 11 West 42nd Street, New York, NY 10036; and the Society of Motion Picture and Television Engineers, 595 West Hartsdale Avenue, White Plains, NY 10607.

(b) Use only personnel trained to perform their audiovisual duties and responsibilities and ensure that equipment intended for projection or playback is in good working order.

(c) Loan permanent or unscheduled audiovisual records to non-Federal recipients only in conformance with the provisions of part 1228 subpart E of this chapter. Such records may be loaned to other Federal agencies only if a record copy is maintained in the agency's custody.

(d) Take all steps necessary to prevent accidental or deliberate alteration or erasure of audiovisual records.

(e) Ensure that no information recorded on permanent or unscheduled magnetic sound or video media is erased.

(f) If different versions of audiovisual productions (e.g., short and long versions or foreign-language versions) are prepared, keep an unaltered copy of each version for record purposes.

(g) Maintain the association between audiovisual records and the finding aids for them, such as captions and published and unpublished catalogs, and production files and similar documentation created in the course of audiovisual production.

(h) Maintain disposable audiovisual records separate from permanent ones in accordance with General Records Schedule 21 and a records schedule approved by NARA for the agency's other audiovisual records.

§ 1232.30 Choosing formats.

Agencies must:

(a) When ordering photographic materials for permanent or unscheduled records, ensure that still picture negatives and motion picture preprints (negatives, masters, etc.) are composed of polyester bases and are processed in accordance with industry standards as specified in ANSI/ISO 543–1990 (ANSI IT9.6–1991) Photography—Photographic Films—Specifications for Safety Film; and, ANSI/NAPM IT9.1–1992 Imaging Media (Film)—Silver-Gelatin Type—Specifications for Stability, which are incorporated by reference. (Currently, not all motion picture stocks are available on a polyester base.) It is particularly important to ensure that residual sodium thiosulfate (hypo) on newly processed black-and-white photographic film does not exceed .014 grams per square meter. Require laboratories to process film in accordance with this standard. Excessive hypo will shorten the longevity of film and accelerate color fading. Process color film in accordance with the manufacturer's recommendations. If using reversal type processing, request full photographic reversal; i.e., develop, bleach, expose, develop, fix, and wash. The standards cited in this paragraph are available from the American National Standards Institute (ANSI), Inc., 11 West 42nd Street, New York, NY 10036. These standards are also available for inspection at the Office of the Federal Register, 800 North Capitol Street, NW., suite 700, Washington, D.C. This incorporation by reference was approved by the Director of the Federal Register in accordance with 5 U.S.C. 552(a) and 1 CFR part 51. These materials are incorporated by reference as they exist on the date of approval and a notice of any change in these materials be published in the FEDERAL REGISTER.

(b) Refrain from using motion pictures in a final ''A & B'' format (two

precisely matched reels designed to be printed together) for the reproduction of excerpts or stock footage.

(c) Use only industrial or professional recording equipment and videotape, previously unrecorded, for original copies of permanent or unscheduled recordings. Limit the use of consumer formats to distribution or reference copies or to subjects scheduled for disposal. Video cassettes in the VHS format are unsuitable for use as originals of permanent or unscheduled records due to their inability to be copied without significant loss in image quality.

(d) Record permanent or unscheduled audio recordings on ¼-inch open-reel tapes at 3 ¾ or 7 ½ inches per second, full track, using professional unrecorded polyester splice-free tape stock. Audio cassettes, including mini-cassettes, are not sufficiently durable for use as originals in permanent records or unscheduled records although they may be used as reference copies.

§ 1232.32 Disposition.

The disposition of audiovisual records shall be carried out in the same manner as that prescribed for other types of records in part 1228 of this chapter. For further instructions on the transfer of permanent audiovisual records to the National Archives see § 1228.266 of this chapter, Audiovisual Records.

[61 FR 32337, June 24, 1996, as amended at 66 FR 27027, May 16, 2001]

PART 1234—ELECTRONIC RECORDS MANAGEMENT

Subpart A—General

Sec.
1234.1 Scope of part.
1234.2 Definitions.

Subpart B—Program Requirements

1234.10 Agency responsibilities.

Subpart C—Standards for the Creation, Use, Preservation, and Disposition of Electronic Records

1234.20 Creation and use of data files.
1234.22 Creation and use of text documents.
1234.24 Standards for managing electronic mail records.
1234.26 Judicial use of electronic records.
1234.28 Security of electronic records.
1234.30 Selection and maintenance of electronic records storage media.
1234.32 Retention and disposition of electronic records.
1234.34 Destruction of electronic records.

AUTHORITY: 44 U.S.C. 2904, 3101, 3102, and 3105.

SOURCE: 55 FR 19218, May 8, 1990, unless otherwise noted.

Subpart A—General

§ 1234.1 Scope of part.

This part establishes the basic requirements related to the creation, maintenance, use, and disposition of electronic records. Electronic records include numeric, graphic, and text information, which may be recorded on any medium capable of being read by a computer and which satisfies the definition of a record. This includes, but is not limited to, magnetic media, such as tapes and disks, and optical disks. Unless otherwise noted, these requirements apply to all electronic information systems, whether on microcomputers, minicomputers, or mainframe computers, regardless of storage media, in network or stand-alone configurations. This part also covers creation, maintenance and use, and disposition of Federal records created by individuals using electronic mail applications.

[60 FR 44640, Aug. 28, 1995]

§ 1234.2 Definitions.

Basic records management terms are defined in 36 CFR 1220.14. As used in part 1234—

Data base means a set of data, consisting of at least one data file, that is sufficient for a given purpose.

Data base management system means a software system used to access and retrieve data stored in a data base.

Data file means related numeric, textual, or graphic information that is organized in a strictly prescribed form and format.

Electronic information system. A system that contains and provides access to computerized Federal records and other information.

Electronic mail message. A document created or received on an electronic mail system including brief notes,

more formal or substantive narrative documents, and any attachments, such as word processing and other electronic documents, which may be transmitted with the message.

Electronic mail system. A computer application used to create, receive, and transmit messages and other documents. Excluded from this definition are file transfer utilities (software that transmits files between users but does not retain any transmission data), data systems used to collect and process data that have been organized into data files or data bases on either personal computers or mainframe computers, and word processing documents not transmitted on an e-mail system.

Electronic record means any information that is recorded in a form that only a computer can process and that satisfies the definition of a Federal record in 44 U.S.C. 3301.

Electronic recordkeeping system. An electronic system in which records are collected, organized, and categorized to facilitate their preservation, retrieval, use, and disposition.

Text documents means narrative or tabular documents, such as letters, memorandums, and reports, in loosely prescribed form and format.

Transmission and receipt data.

(1) *Transmission data.* Information in electronic mail systems regarding the identities of sender and addressee(s), and the date and time messages were sent.

(2) *Receipt data.* Information in electronic mail systems regarding date and time of receipt of a message, and/or acknowledgment of receipt or access by addressee(s).

[55 FR 19218, May 8, 1990, as amended at 60 FR 44641, Aug. 28, 1995]

Subpart B—Program Requirements

§ 1234.10 Agency responsibilities.

The head of each Federal agency shall ensure that the management of electronic records incorporates the following elements:

(a) Assigning responsibility to develop and implement an agencywide program for the management of all records created, received, maintained, used, or stored on electronic media; and notifying the National Archives and Records Administration, Modern Records Programs (NWM), 8601 Adelphi Rd., College Park, MD 20740–6001 and the General Services Administration, Office of Government Policy (MKB), Washington, DC 20405, of the name and title of the person assigned the responsibility.

(b) Integrating the management of electronic records with other records and information resources management programs of the agency.

(c) Incorporating electronic records management objectives, responsibilities, and authorities in pertinent agency directives and disseminating them throughout the agency as appropriate.

(d) Establishing procedures for addressing records management requirements, including recordkeeping requirements and disposition, before approving new electronic information system or enhancements to existing systems.

(e) Ensuring that adequate training is provided for users of electronic mail systems on recordkeeping requirements, the distinction between Federal records and nonrecord materials, procedures for designating Federal records, and moving or copying records for inclusion in an agency recordkeeping system;

(f) Ensuring that adequate training is provided for users of electronic information system in the operation, care, and handling of the equipment, software, and media used in the system.

(g) Developing and maintaining up-to-date documentation about all electronic information system that is adequate to: Specify all technical characteristics necessary for reading or processing the records; identify all defined inputs and outputs of the system; define the contents of the files and records; determine restrictions on access and use; understand the purpose(s) and function(s) of the system; describe update cycles or conditions and rules for adding information to the system, changing information in it, or deleting information; and ensure the timely, authorized disposition of the records.

(h) Specifying the location, manner, and media in which electronic records will be maintained to meet operational

and archival requirements, and maintaining inventories of electronic information system to facilitate disposition.

(i) Developing and securing NARA approval of records disposition schedules, and ensuring implementation of their provisions.

(j) Specifying the methods of implementing controls over national security-classified, sensitive, proprietary, and Privacy Act records stored and used electronically.

(k) Establishing procedures to ensure that the requirements of this part are applied to those electronic records that are created or maintained by contractors.

(l) Ensuring compliance with applicable Governmentwide policies, procedures, and standards such as those issued by the Office of Management and Budget, the General Accounting Office, the General Services Administration, the National Archives and Records Administration, and the National Institute of Standards and Technology.

(m) Reviewing electronic information system periodically for conformance to established agency procedures, standards, and policies as part of the periodic reviews required by 44 U.S.C. 3506. The review should determine if the records have been properly identified and described, and whether the schedule descriptions and retention periods reflect the current informational content and use. If not, or if substantive changes have been made in the structure, design, codes, purposes, or uses of the system, submit an SF 115, Request for Records Disposition Authority, to NARA.

[55 FR 19218, May 8, 1990, as amended at 60 FR 44641, Aug. 28, 1995; 63 FR 35830, July 1, 1998; 66 FR 27028, May 16, 2001]

Subpart C—Standards for the Creation, Use, Preservation, and Disposition of Electronic Records

§ 1234.20 Creation and use of data files.

(a) For electronic information systems that produce, use, or store data files, disposition instructions for the data shall be incorporated into the system's design.

(b) Agencies shall maintain adequate and up-to-date technical documentation for each electronic information system that produces, uses, or stores data files. Minimum documentation required is a narrative description of the system; physical and technical characteristics of the records, including a record layout that describes each field including its name, size, starting or relative position, and a description of the form of the data (such as alphabetic, zoned decimal, packed decimal, or numeric), or a data dictionary or the equivalent information associated with a data base management system including a description of the relationship between data elements in data bases; and any other technical information needed to read or process the records.

[55 FR 19218, May 8, 1990, as amended at 60 FR 44641, Aug. 28, 1995]

§ 1234.22 Creation and use of text documents.

(a) Electronic recordkeeping systems that maintain the official file copy of text documents on elecronic media shall meet the following minimum requirements:

(1) Provide a method for all authorized users of the system to retrieve desired documents, such as an indexing or text search system;

(2) Provide an appropriate level of security to ensure integrity of the documents;

(3) Provide a standard interchange format when necessary to permit the exchange of documents on electronic media between agency computers using different software/operating systems and the conversion or migration of documents on electronic media from one system to another; and

(4) Provide for the disposition of the documents including, when necessary, the requirements for transferring permanent records to NARA (see § 1228.270 of this chapter).

(b) Before a document is created electronically on electronic recordkeeping systems that will maintain the official file copy on electronic media, each document shall be identified sufficiently

to enable authorized personnel to retrieve, protect, and carry out the disposition of documents in the system. Appropriate identifying information for each document maintained on the electronic media may include: office of origin, file code, key words for retrieval, addressee (if any), signator, author, date, authorized disposition (coded or otherwise), and security classification (if applicable). Agencies shall ensure that records maintained in such systems can be correlated with related records on paper, microform, or other media.

[55 FR 19218, May 8, 1990, as amended at 60 FR 44641, Aug. 28, 1995; 66 FR 27028, May 16, 2001]

§ 1234.24 Standards for managing electronic mail records.

Agencies shall manage records created or received on electronic mail systems in accordance with the provisions of this chapter pertaining to adequacy of documentation, recordkeeping requirements, agency records management responsibilities, and records disposition (36 CFR parts 1220, 1222, and 1228).

(a) Agency instructions on identifying and preserving electronic mail messages will address the following unique aspects of electronic mail:

(1) Some transmission data (names of sender and addressee(s) and date the message was sent) must be preserved for each electronic mail record in order for the context of the message to be understood. Agencies shall determine if any other transmission data is needed for purposes of context.

(2) Agencies that use an electronic mail system that identifies users by codes or nicknames or identifies addressees only by the name of a distribution list shall instruct staff on how to retain names on directories or distributions lists to ensure identification of the sender and addressee(s) of messages that are records.

(3) Agencies that use an electronic mail system that allows users to request acknowledgments or receipts showing that a message reached the mailbox or inbox of each addressee, or that an addressee opened the message, shall issue instructions to e-mail users specifying when to request such receipts or acknowledgments for recordkeeping purposes and how to preserve them.

(4) Agencies with access to external electronic mail systems shall ensure that Federal records sent or received on these systems are preserved in the appropriate recordkeeping system and that reasonable steps are taken to capture available transmission and receipt data needed by the agency for recordkeeping purposes.

(5) Some e-mail systems provide calendars and task lists for users. These may meet the definition of Federal record. Calendars that meet the definition of Federal records are to be managed in accordance with the provisions of General Records Schedule 23, Item 5.

(6) Draft documents that are circulated on electronic mail systems may be records if they meet the criteria specified in 36 CFR 1222.34.

(b) Agencies shall consider the following criteria when developing procedures for the maintenance of electronic mail records in appropriate recordkeeping systems, regardless of format.

(1) Recordkeeping systems that include electronic mail messages must:

(i) Provide for the grouping of related records into classifications according to the nature of the business purposes the records serve;

(ii) Permit easy and timely retrieval of both individual records and files or other groupings of related records;

(iii) Retain the records in a usable format for their required retention period as specified by a NARA-approved records schedule;

(iv) Be accessible by individuals who have a business need for information in the system;

(v) Preserve the transmission and receipt data specified in agency instructions; and

(vi) Permit transfer of permanent records to the National Archives and Records Administration (see 36 CFR 1228.270 and 36 CFR 1234.32(a)).

(2) Agencies shall not store the recordkeeping copy of electronic mail messages that are Federal records only on the electronic mail system, unless the system has all of the features specified in paragraph (b)(1) of this section. If the electronic mail system is not designed to be a recordkeeping system,

agencies shall instruct staff on how to copy Federal records from the electronic mail system to a recordkeeping system.

(c) Agencies that maintain their electronic mail records electronically shall move or copy them to a separate electronic recordkeeping system unless their system has the features specified in paragraph (b)(1) of this section. Because they do not have the features specified in paragraph (b)(1) of this section, backup tapes should not be used for recordkeeping purposes. Agencies may retain records from electronic mail systems in an off-line electronic storage format (such as optical disk or magnetic tape) that meets the requirements described at 36 CFR 1234.30(a). Agencies that retain permanent electronic mail records scheduled for transfer to the National Archives shall either store them in a format and on a medium that conforms to the requirements concerning transfer at 36 CFR 1228.188 or shall maintain the ability to convert the records to the required format and medium at the time transfer is scheduled.

(d) Agencies that maintain paper files as their recordkeeping systems shall print their electronic mail records and the related transmission and receipt data specified by the agency.

[60 FR 44641, Aug. 28, 1995, as amended at 66 FR 27028, May 16, 2001]

§ 1234.26 Judicial use of electronic records.

Electronic records may be admitted in evidence to Federal courts for use in court proceedings (Federal Rules of Evidence 803(8)) if trustworthiness is established by thoroughly documenting the recordkeeping system's operation and the controls imposed upon it. Agencies should implement the following procedures to enhance the legal admissibility of electronic records.

(a) Document that similar kinds of records generated and stored electronically are created by the same processes each time and have a standardized retrieval approach.

(b) Substantiate that security procedures prevent unauthorized addition, modification or deletion of a record and ensure system protection against such problems as power interruptions.

(c) Identify the electronic media on which records are stored throughout their life cycle, the maximum time span that records remain on each storage medium, and the NARA-approved disposition of all records.

(d) Coordinate all of the above with legal counsel and senior IRM and records management staff.

[55 FR 19218, May 8, 1990. Redesignated at 60 FR 44641, Aug. 28, 1995]

§ 1234.28 Security of electronic records.

Agencies shall implement and maintain an effective records security program that incorporates the following:

(a) Ensures that only authorized personnel have access to electronic records.

(b) Provides for backup and recovery of records to protect against information loss.

(c) Ensures that appropriate agency personnel are trained to safeguard sensitive or classified electronic records.

(d) Minimizes the risk of unauthorized alteration or erasure of electronic records.

(e) Ensures that electronic records security is included in computer systems security plans prepared pursuant to the Computer Security Act of 1987 (40 U.S.C. 759 *note*).

[55 FR 19218, May 8, 1990. Redesignated at 60 FR 44641, Aug. 28, 1995]

§ 1234.30 Selection and maintenance of electronic records storage media.

(a) Agencies shall select appropriate media and systems for storing agency records throughout their life, which meet the following requirements:

(1) Permit easy retrieval in a timely fashion;

(2) Facilitate distinction between record and nonrecord material;

(3) Retain the records in a usable format until their authorized disposition date; and

(4) If the media contains permanent records and does not meet the requirements for transferring permanent records to NARA as outlined in § 1228.270 of this chapter, permit the migration of the permanent records at

the time of transfer to a medium which does meet the requirements.

(b) The following factors shall be considered before selecting a storage medium or converting from one medium to another:

(1) The authorized life of the records, as determined during the scheduling process;

(2) The maintenance necessary to retain the records;

(3) The cost of storing and retrieving the records;

(4) The records density;

(5) The access time to retrieve stored records;

(6) The portability of the medium (that is, selecting a medium that will run on equipment offered by multiple manufacturers) and the ability to transfer the information from one medium to another (such as from optical disk to magnetic tape); and

(7) Whether the medium meets current applicable Federal Information Processing Standards.

(c) Agencies should avoid the use of floppy disks for the exclusive long-term storage of permanent or unscheduled electronic records.

(d) Agencies shall ensure that all authorized users can identify and retrieve information stored on diskettes, removable disks, or tapes by establishing or adopting procedures for external labeling.

(e) Agencies shall ensure that information is not lost because of changing technology or deterioration by converting storage media to provide compatibility with the agency's current hardware and software. Before conversion to a different medium, agencies must determine that the authorized disposition of the electronic records can be implemented after conversion.

(f) Agencies shall back up electronic records on a regular basis to safeguard against the loss of information due to equipment malfunctions or human error. Duplicate copies of permanent or unscheduled records shall be maintained in storage areas separate from the location of the records that have been copied.

(g) *Maintenance of magnetic computer tape.* (1) Agencies shall test magnetic computer tapes no more than 6 months prior to using them to store electronic records that are unscheduled or scheduled for permanent retention. This test should verify that the tape is free of permanent errors and in compliance with National Institute of Standards and Technology or industry standards.

(2) Agencies shall maintain the storage and test areas for computer magnetic tapes containing permanent and unscheduled records at the following temperatures and relative humidities:

Constant temperature—62 to 68 °F.
Constant relative humidity—35% to 45%

(3) Agencies shall annually read a statistical sample of all reels of magnetic computer tape containing permanent and unscheduled records to identify any loss of data and to discover and correct the causes of data loss. In tape libraries with 1800 or fewer reels, a 20% sample or a sample size of 50 reels, whichever is larger, should be read. In tape libraries with more than 1800 reels, a sample of 384 reels should be read. Tapes with 10 or more errors should be replaced and, when possible, lost data shall be restored. All other tapes which might have been affected by the same cause (i.e., poor quality tape, high usage, poor environment, improper handling) shall be read and corrected as appropriate.

(4) Agencies shall copy permanent or unscheduled data on magnetic tapes before the tapes are 10 years old onto tested and verified new tapes.

(5) External labels (or the equivalent automated tape management system) for magnetic tapes used to store permanent or unscheduled electronic records shall provide unique identification for each reel, including the name of the organizational unit responsible for the data, system title, and security classification, if applicable. Additionally, the following information shall be maintained for (but not necessarily attached to) each reel used to store permanent or unscheduled electronic records: file title(s); dates of creation; dates of coverage; the recording density; type of internal labels; volume serial number, if applicable; number of tracks; character code/software dependency; information about block size; and reel sequence number, if the file is part of a multi-reel set. For numeric data files, include record format and logical

record length, if applicable; data set name(s) and sequence, if applicable; and number of records for each data set.

(6) Agencies shall prohibit smoking and eating in magnetic computer tape storage libraries and test or evaluation areas that contain permanent or unscheduled records.

(h) *Maintenance of direct access storage media.* (1) Agencies shall issue written procedures for the care and handling of direct access storage media which draw upon the recommendations of the manufacturers.

(2) External labels for diskettes or removable disks used when processing or temporarily storing permanent or unscheduled records shall include the following information: name of the organizational unit responsible for the records, descriptive title of the contents, dates of creation, security classification, if applicable, and identification of the software and hardware used.

[55 FR 19218, May 8, 1990. Redesignated at 60 FR 44641, Aug. 28, 1995; 62 FR 54585, Oct. 21, 1997; 65 FR 24132, Apr. 25, 2000; 66 FR 27028, May 16, 2001]

§ 1234.32 Retention and disposition of electronic records.

Agencies shall establish policies and procedures to ensure that electronic records and their documentation are retained as long as needed by the Government. These retention procedures shall include provisions for:

(a) Scheduling the disposition of all electronic records, as well as related documentation and indexes, by applying General Records Schedules (particularly GRS 20 or GRS 23) as appropriate or submitting an SF 115, Request for Records Disposition Authority, to NARA (see part 1228 of this chapter). The information in electronic information systems, including those operated for the Government by a contractor, shall be scheduled as soon as possible but no later than one year after implementation of the system.

(b) Transferring a copy of the electronic records and any related documentation and indexes to the National Archives at the time specified in the records disposition schedule in accordance with instructions found in § 1228.270 of this chapter. Transfer may take place at an earlier date if convenient for both the agency and the National Archives and Records Administration.

(c) Establishing procedures for regular recopying, reformatting, and other necessary maintenance to ensure the retention and usability of electronic records throughout their authorized life cycle (see § 1234.28).

(d) Electronic mail records may not be deleted or otherwise disposed of without prior disposition authority from NARA (44 U.S.C. 3303a). This applies to the original version of the record that is sent or received on the electronic mail system and any copies that have been transferred to a recordkeeping system. See 36 CFR part 1228 for records disposition requirements.

(1) *Disposition of records on the electronic mail system.* When an agency has taken the necessary steps to retain the record in a recordkeeping system, the identical version that remains on the user's screen or in the user's mailbox has no continuing value. Therefore, NARA has authorized deletion of the version of the record on the electronic mail system under General Records Schedule 20, Item 14, after the record has been preserved in a recordkeeping system along with all appropriate transmission data.

(2) *Records in recordkeeping systems.* The disposition of electronic mail records that have been transferred to an appropriate recordkeeping system is governed by the records schedule or schedules that control the records in that system. If the records in the system are not scheduled, the agency shall follow the procedures at 36 CFR part 1228.

[55 FR 19218, May 8, 1990. Redesignated and amended at 60 FR 44641, 44642, Aug. 28, 1995; 66 FR 27028, May 16, 2001]

§ 1234.34 Destruction of electronic records.

Electronic records may be destroyed only in accordance with a records disposition schedule approved by the Archivist of the United States, including General Records Schedules. At a minimum each agency shall ensure that:

(a) Electronic records scheduled for destruction are disposed of in a manner

that ensures protection of any sensitive, proprietary, or national security information.

(b) Magnetic recording media previously used for electronic records containing sensitive, proprietary, or national security information are not reused if the previously recorded information can be compromised by reuse in any way.

(c) Agencies shall establish and implement procedures that specifically address the destruction of electronic records generated by individuals employing electronic mail.

[55 FR 19218, May 8, 1990. Redesignated and amended at 60 FR 44641, 44642, Aug. 28, 1995]

PART 1236—MANAGEMENT OF VITAL RECORDS

Subpart A—General

Sec.
1236.10 Purpose.
1236.12 Authority.
1236.14 Definitions.

Subpart B—Vital Records

1236.20 Vital records program objectives.
1236.22 Identification of vital records.
1236.24 Use of vital records and copies of vital records.
1236.26 Protection of vital records.
1236.28 Disposition of original vital records.

AUTHORITY: 44 U.S.C. 2104(a), 2904(a), 3101; E. O. 12656, 53 FR 47491, 3 CFR, 1988 Comp., p. 585.

SOURCE: 60 FR 29990, June 7, 1995, unless otherwise noted.

Subpart A—General

§ 1236.10 Purpose.

This part prescribes policies and procedures for establishing a program for the identification and protection of vital records, those records needed by agencies for continuity of operations before, during, and after emergencies, and those records needed to protect the legal and financial rights of the Government and persons affected by Government activities. The records may be maintained on a variety of media including paper, magnetic tape or disk, photographic film, and microfilm. The management of vital records is part of an agency's continuity of operations plan designed to meet emergency management responsibilities.

§ 1236.12 Authority.

Heads of agencies are responsible for the vital records program under the following authorities:

(a) To make and preserve records containing adequate and proper documentation of the agency's organization, functions, policies, procedures, decisions, and essential transactions, and to furnish information to protect the legal and financial rights of the Government and of persons directly affected by the agency's activities (44 U.S.C. 3101).

(b) To perform national security emergency preparedness functions and activities (Executive Order 12656).

§ 1236.14 Definitions.

Basic records management terms are defined in 36 CFR 1220.14. As used in part 1236:

Contingency planning means instituting policies and procedures to mitigate the effects of potential emergencies or disasters on an agency's operations and records. Contingency planning is part of the continuity of operations planning required under Federal Preparedness Circulars and other guidance issued by the Federal Emergency Management Agency (FEMA) and Executive Order 12656.

Cycle means the periodic removal of obsolete copies of vital records and their replacement with copies of current vital records. This may occur daily, weekly, quarterly, annually or at other designated intervals.

Disaster means an unexpected occurrence inflicting widespread destruction and distress and having long-term adverse effects on agency operations. Each agency defines what a long-term adverse effect is in relation to its most critical program activities.

Emergency means a situation or an occurrence of a serious nature, developing suddenly and unexpectedly, and demanding immediate action. This is generally of short duration, for example, an interruption of normal agency operations for a week or less. It may involve electrical failure or minor flooding caused by broken pipes.

Emergency operating records are that type of vital records essential to the continued functioning or reconstitution of an organization during and after an emergency. Included are emergency plans and directive(s), orders of succession, delegations of authority, staffing assignments, selected program records needed to continue the most critical agency operations, as well as related policy or procedural records that assist agency staff in conducting operations under emergency conditions and for resuming normal operations after an emergency.

Legal and financial rights records are that type of vital records essential to protect the legal and financial rights of the Government and of the individuals directly affected by its activities. Examples include accounts receivable records, social security records, payroll records, retirement records, and insurance records. These records were formerly defined as ''rights-and-interests'' records.

National security emergency means any occurrence, including natural disaster, military attack, technological emergency, or other emergency, that seriously degrades or threatens the national security of the United States, as defined in Executive Order 12656.

Off-site storage means a facility other than an agency's normal place of business where vital records are stored for protection. This is to ensure that the vital records are not subject to damage or destruction from an emergency or disaster affecting an agency's normal place of business.

Vital records mean essential agency records that are needed to meet operational responsibilities under national security emergencies or other emergency or disaster conditions (emergency operating records) or to protect the legal and financial rights of the Government and those affected by Government activities (legal and financial rights records).

Vital records program means the policies, plans, and procedures developed and implemented and the resources needed to identify, use, and protect the essential records needed to meet operational responsibilities under national security emergencies or other emergency or disaster conditions or to protect the Government's rights or those of its citizens. This is a program element of an agency's emergency management function.

Subpart B—Vital Records

§ 1236.20 Vital records program objectives.

The vital records program is conducted to identify and protect those records that specify how an agency will operate in case of emergency or disaster, those records vital to the continued operations of the agency during and after an emergency or disaster, and records needed to protect the legal and financial rights of the Government and of the persons affected by its actions. An agency identifies vital records in the course of contingency planning activities carried out in the context of the emergency management function. In carrying out the vital records program agencies shall:

(a) Specify agency staff responsibilities;

(b) Ensure that all concerned staff are appropriately informed about vital records;

(c) Ensure that the designation of vital records is current and complete; and

(d) Ensure that vital records and copies of vital records are adequately protected, accessible, and immediately usable.

§ 1236.22 Identification of vital records.

Vital records include emergency plans and related records that specify how an agency is to respond to an emergency as well as those records that would be needed to continue operations and protect legal and financial rights. Agencies should consider the informational content of records series and electronic records systems when identifying vital records. Only the most recent and complete source of the vital information needs to be treated as vital records.

§ 1236.24 Use of vital records and copies of vital records.

Agencies shall ensure that retrieval procedures for vital records require

only routine effort to locate needed information, especially since individuals unfamiliar with the records may need to use them during an emergency or disaster. Agencies also shall ensure that all equipment needed to read vital records or copies of vital records will be available in case of emergency or disaster. For electronic records systems, agencies also shall ensure that system documentation adequate to operate the system and access the records will be available in case of emergency or disaster.

§ 1236.26 Protection of vital records.

Agencies shall take appropriate measures to ensure the survival of the vital records or copies of vital records in case of emergency or disaster. In the case of electronic records, this requirement is met if the information needed in the event of emergency or disaster is available in a copy made for general security purposes, even when the copy contains other information.

(a) *Duplication.* Computer backup tapes created in the normal course of system maintenance or other electronic copies that may be routinely created in the normal course of business may be used as the vital record copy. For hard copy records, agencies may choose to make microform copies. Standards for the creation, preservation and use of microforms are found in 36 CFR part 1230, Micrographic Records Management. The Clinger-Cohen Act (40 U.S.C. 1401, Pub. L. 104–106, *et seq.*, as amended by Pub. L. 104–208), OMB Circular A–130, and 36 CFR part 1234, Electronic Records Management, and 41 CFR part 201, subchapter B, Management and Use of Information and Records, specify protective measures and standards for electronic records.

(b) *Storage.* When agencies choose duplication as a protection method, the copy of the vital record stored off-site is normally a duplicate of the original record. Designating and using duplicate copies of original records as vital records facilitates destruction or deletion of obsolete duplicates when replaced by updated copies, whereas original vital records must be retained for the period specified in the agency records disposition schedule. The agency may store the original records off-site if protection of original signatures is necessary, or if it does not need to keep the original record at its normal place of business.

(c) *Storage considerations.* Agencies need to consider several factors when deciding where to store copies of vital records. Copies of emergency operating vital records need to be accessible in a very short period of time for use in the event of an emergency or disaster. Copies of legal and financial rights records may not be needed as quickly. In deciding where to store vital records copies, agencies shall treat records that have the properties of both categories, that is, emergency operating and legal and financial rights records, as emergency operating records.

(1) Under certain circumstances, Federal records centers (FRC's) may store copies of emergency operating vital records. FRC's will store small volumes of such records, but may not be able to provide storage for large collections or ones requiring constant recycling of the vital records, except under reimbursable agreement. Prior to preparing the records for shipment, the agency must contact the FRC to determine if the center can accommodate the storage requirements and return copies in an acceptable period of time.

(2) The off-site copy of legal and financial rights vital records may be stored at an off-site agency location or, in accordance with § 1228.162 of this chapter, at an FRC.

(3) When using an FRC for storing vital records that are duplicate copies of original records, the agency must specify on the SF 135, Records Transmittal and Receipt, that they are vital records (duplicate copies) and the medium on which they are maintained. The agency shall also periodically cycle (update) them by removing obsolete items and replacing them with the most recent version, when necessary.

(4) Agencies that transfer permanent, original vital records maintained on electronic or microform media to the custody of the National Archives may designate such records as their off-site copy. That designation may remain in effect until the information in such

transferred records is superseded or becomes obsolete.

[60 FR 29990, June 7, 1995, as amended at 66 FR 27028, May 16, 2001]

§ 1236.28 Disposition of original vital records.

The disposition of original vital records is governed by records schedules approved by NARA (see part 1228, Disposition of Federal Records). Original records that are not scheduled may not be destroyed or deleted.

PART 1238—PROGRAM ASSISTANCE

Sec.
1238.1 Scope of part.
1238.2 Requests for assistance.

AUTHORITY: 44 U.S.C. 2904 and 3101.

§ 1238.1 Scope of part.

The National Archives and Records Administration publishes handbooks, conducts workshops and other training sessions, and furnishes information and guidance to Federal agencies about the creation of records, their maintenance and use, and their disposition.

[50 FR 26940, June 28, 1985]

§ 1238.2 Requests for assistance.

Agencies desiring information or assistance related to any of the areas covered by subchapter B should contact the NARA Life Cycle Management Division (NWML), 8601 Adelphi Rd., College Park, MD 20740–6001. Agency field organizations may contact the appropriate Regional Administrator regarding records in or scheduled for transfer to the records center and/or the archival operations within the region.

[57 FR 19807, May 8, 1992, as amended at 63 FR 35830, July 1, 1998]

SUBCHAPTER C—PUBLIC AVAILABILITY AND USE

PART 1250—PUBLIC AVAILABILITY AND USE OF FEDERAL RECORDS

Subpart A—General Information About Freedom of Information Act (FOIA) Requests

Sec.
1250.1 Scope of this part.
1250.2 Definitions.
1250.4 Who can file a FOIA request?
1250.6 Does FOIA cover all of the records at NARA?
1250.8 Does NARA provide access to all the executive branch records housed at NARA facilities?
1250.10 Do I need to use FOIA to gain access to records at NARA?
1250.12 What types of records are available in NARA's FOIA Reading Room?
1250.14 If I do not use FOIA to request records, will NARA treat my request differently?

Subpart B—How to Access Records Under FOIA

1250.20 What do I include in my FOIA request?
1250.22 Where do I send my FOIA request?
1250.24 Will you accept a FOIA request through email?
1250.26 How quickly will NARA respond to my FOIA request?
1250.28 Will NARA ever expedite the review of the records I requested?
1250.30 How do I request expedited processing?
1250.32 How quickly will NARA process an expedited request?
1250.34 How will I know if NARA is going to release the records I requested?
1250.36 When will NARA deny a FOIA request?
1250.38 In what format will NARA provide copies?

Subpart C—Fees

1250.50 Will I be charged for my FOIA request?
1250.52 How much will I have to pay for a FOIA request for NARA operational records?
1250.54 General information on fees for NARA operational records.
1250.56 Fee schedule for NARA operational records.
1250.58 Does NARA ever waive FOIA fees for NARA operational records?
1250.60 How will NARA determine if I am eligible for a fee waiver for NARA operational records?

Subpart D—Appeals

1250.70 What are my appeal rights under FOIA?
1250.72 How do I file an appeal?
1250.74 Where do I send my appeal?
1250.76 May I email my FOIA appeal?
1250.78 How does NARA handle appeals?

Subpart E—Special Situations

1250.80 How does a submitter identify records containing confidential commercial information?
1250.82 How will NARA handle a FOIA request for confidential commercial information?
1250.84 Service of subpoena or other legal demand for NARA operational records.

AUTHORITY: 44 U.S.C. 2104(a), 2204; 5 U.S.C. 552; E.O. 12600, 52 FR 23781, 3 CFR, 1987 Comp., p. 235.

SOURCE: 66 FR 16376, Mar. 23, 2001, unless otherwise noted.

Subpart A—General Information About Freedom of Information Act (FOIA) Requests

§ 1250.1 Scope of this part.

This part implements the provisions of the Freedom of Information Act (FOIA), 5 U.S.C. 552, as amended, for NARA operational records and archival records that are subject to FOIA. Other NARA regulations in 36 CFR parts 1254 through 1275 provide detailed guidance for conducting research at NARA.

§ 1250.2 Definitions.

The following definitions apply to this part:

(a) *Archival records* means permanently valuable records of the United States Government that have been transferred to the legal custody of the Archivist of the United States.

(b) *Commercial use requester* means a requester seeking information for a use or purpose that furthers the commercial, trade, or profit interests of the requester or the person on whose behalf the request is made.

(c) *Confidential commercial information* means records provided by a submitter that may contain material exempt from release under the FOIA because

disclosure could reasonably be expected to cause the submitter substantial competitive harm.

(d) *Educational institution request* means a preschool, a public or private elementary or secondary school, an institution of undergraduate higher education, an institution of graduate higher education, an institution of professional education, or an institution of vocational education, that operates a program of scholarly research. To be in this category, a requester must show that the request is authorized by and is made under the auspices of a qualifying institution and that the records are not sought for a commercial use but are sought to further scholarly research.

(e) *FOIA request* means a written request for access to records of the executive branch of the Federal Government held by NARA, including NARA operational records, or to Presidential records in the custody of NARA that were created after January 19, 1981, that cites the Freedom of Information Act.

(f) *Freelance journalist* means an individual who qualifies as a representative of the news media because the individual can demonstrate a solid basis for expecting publication through a news organization, even though not actually in its employ. A publication contract would be the clearest proof of a solid basis, but the individual's publication history may also be considered in demonstrating this solid basis.

(g) *News media representative* means a person actively gathering news for an entity that is organized and operated to publish or broadcast news to the public. The term ''news'' means information that is about current events or that would be of current interest to the public. Examples of news media entities include television or radio stations broadcasting to the public at large, and publishers of periodicals (but only in those instances when they can qualify as disseminators of news) who make their products available for purchase or subscription to the general public.

(h) *Non-commercial scientific institution* means an institution that is not operated on a basis that furthers the commercial, trade, or profit interests of any person or organization, and which is operated solely for the purpose of conducting scientific research which produces results that are not intended to promote any particular product or industry.

(i) *Operational records* means those records that NARA creates or receives in carrying out its mission and responsibilities as an executive branch agency. This does not include archival records as defined in paragraph (a) of this section.

(j) *Other requesters* means any individual who is not a commercial-use requester, not a representative of the news media, not a freelance journalist, nor one associated with an educational or non-commercial scientific institution whose research activities conform to the definition in paragraph (h) of this section.

(k) *Submitter* means any person or entity providing potentially confidential commercial information to an agency. The term submitter includes, but is not limited to, corporations, state governments, and foreign governments.

§ 1250.4 Who can file a FOIA request?

Any individual, partnership, corporation, association, or government regardless of nationality may file a FOIA request.

§ 1250.6 Does FOIA cover all of the records at NARA?

No, FOIA applies only to the records of the executive branch of the Federal government and certain Presidential records. Use the following chart to determine how to gain access:

IF YOU WANT ACCESS TO ...	THEN ACCESS IS GOVERNED BY . . .
(A) Records of executive branch agencies	This part and parts 1254 through 1260 of this chapter. FOIA applies to these records.

IF YOU WANT ACCESS TO ...	THEN ACCESS IS GOVERNED BY . . .
(B) Records of the Federal courts	Parts 1254 through 1260 of this chapter. FOIA does not apply to these records.
(C) Records of Congress	Parts 1254 through 1260 of this chapter. FOIA does not apply to these records.
(D) Presidential records (created by Presidents holding office since 1981).	This part and parts 1254 through 1270 of this chapter. FOIA applies to these records 5 years after the President leaves office. However a President may invoke exemptions under the Presidential Records Act which would extend this up to 12 years after the President leaves office.
(E) Documents created by Presidents holding office before 1981 and housed in a NARA Presidential library.	The deed of gift under which they were given to NARA. These documents are not Federal records and FOIA does not apply to these materials.
(F) Nixon Presidential materials	Part 1275 of this chapter. FOIA does not apply to these materials.

§ 1250.8 Does NARA provide access to all the executive branch records housed at NARA facilities?

(a) NARA provides access to the records NARA creates (operational records) and records originating in other Federal agencies that have been transferred to the legal custody of the Archivist of the United States (archival records).

(b) Twentieth-century personnel and medical records of former members of the military and of former civilian employees of the Federal government are held at NARA's National Personnel Records Center (NPRC), located in St. Louis, Missouri. These records remain in the legal custody of the agencies that created them and access to them is governed by the FOIA and other access regulations of the creating agencies. The NPRC processes FOIA requests under authority delegated by the originating agencies, not under the provisions of this part.

(c) In our national and regional records centers, NARA stores records that agencies no longer need for day-to-day business. These records remain in the legal custody of the agencies that created them. Access to these records is through the originating agency. NARA does not process FOIA requests for these records.

§ 1250.10 Do I need to use FOIA to gain access to records at NARA?

(a) Most archival records held by NARA are available to the public for research without filing a FOIA request. You may either visit a NARA facility as a researcher to view and copy records or you may write to request copies of specific records.

(b) If you are seeking access to archival records that are restricted and not available to the public, you may need to file a FOIA request or a mandatory review request (see part 1254 of this chapter for procedures for accessing classified records) to gain access to these materials. If you make a reference request for restricted records, we may ask that you change your reference request to a FOIA request or a mandatory review request. See 36 CFR

1254.46 for information on filing mandatory review requests.

(c) You must file a FOIA request when you request access to NARA operational records that are not already available to the public.

§ 1250.12 What types of records are available in NARA's FOIA Reading Room?

(a) NARA makes available for public inspection and copying the following materials described in subsection (a)(2) of the FOIA:

(1) Final NARA orders;

(2) Written statements of NARA policy that are not published in the Federal Register;

(3) Operational staff manuals and instructions to staff that affect members of the public;

(4) Copies of records requested 3 or more times under FOIA and other records that have been or are likely to become the subject of subsequent FOIA requests for substantially the same records;

(5) An index, updated quarterly, to these materials.

(b) These materials are available during normal working hours at the NARA facility where the records are located. See 36 CFR parts 1253 and 1254 for a fuller description of NARA facilities and research room procedures.

(c) Any of this material that was created after October 31, 1996, will also be placed on NARA's web site at *http://www.archives.gov/research_room/foia_reading_room/foia_reading_room.html*.

(d) For paper copies of the index to these materials write the NARA FOIA Officer at the address listed in § 1250.22(d).

[66 FR 16376, Mar. 23, 2001, as amended at 67 FR 43253, June 27, 2002]

§ 1250.14 If I do not use FOIA to request records, will NARA treat my request differently?

Whether you choose to invoke the FOIA or not, NARA will respond as promptly as possible to your request.

Subpart B—How To Access Records Under FOIA

§ 1250.20 What do I include in my FOIA request?

In your FOIA request, you must:

(a) Describe the records you wish to access in enough detail to allow NARA staff to find them. The more information you provide, the better possibility NARA has of finding the records you are seeking. Information that will help us find the records includes:

(1) The agencies, offices, or individuals involved; and

(2) The approximate date when the records were created.

(b) Include your name and full mailing address. If possible, please include a phone number or email address as well. This information will allow us to reach you faster if we have any questions about your request.

(c) Mark both your letter and envelope with the words ''FOIA Request.''

§ 1250.22 Where do I send my FOIA request?

(a) For requests for archival records in the Washington, DC, area, mail your request to the Chief, Special Access and FOIA Staff (NWCTF), Room 6350, National Archives and Records Administration, 8601 Adelphi Road, College Park, MD 20740-6001.

(b) For archival records in any of NARA's regional records services facilities, send the FOIA request to the director of the facility in which the records are located. The addresses for these facilities are listed in 36 CFR 1253.7.

(c) For Presidential records subject to FOIA, mail your request to the director of the library in which the records are located. The addresses for these facilities are listed in 36 CFR 1253.3.

(d) For the operational records of any NARA unit except the Office of the Inspector General, mail your request to the NARA FOIA Officer (NGC), Room 3110, National Archives and Records Administration, 8601 Adelphi Road, College Park, MD 20740-6001.

(e) For records of the Inspector General write to Office of the Inspector General (OIG), FOIA Request, Room 1300, National Archives and Records

Administration, 8601 Adelphi Road, College Park, MD 20740-6001.

(f) If you are unable to determine where to send your request, send it to the NARA FOIA Officer (NGC), Room 3110, National Archives and Records Administration, 8601 Adelphi Road, College Park, MD 20740-6001. That office will forward your request to the office(s) that have the records you are seeking. Your request will be considered received when it reaches the proper office's FOIA staff.

§ 1250.24 Will you accept a FOIA request through email?

Yes, send email FOIA requests to *http://www.archives.gov/global_pages/inquire_form.html*. You must indicate in the subject line of your email message that you are sending a FOIA request. The body of the message must contain all of the information listed in § 1250.20.

[66 FR 16376, Mar. 23, 2001, as amended at 67 FR 43253, June 27, 2002]

§ 1250.26 How quickly will NARA respond to my FOIA request?

(a) NARA will make an initial response to all FOIA requests within 20 working days. The initial response will inform requesters of any complexity in processing their request, which may lengthen the time required to reach a final decision on the release of the records.

(b) In most cases, NARA will make a decision on the release of the records you requested within the 20 working days. If unusual circumstances prevent us from making a decision within 20 working days, we will inform you in writing how long it will take us to complete your request. Unusual circumstances are the need to:

(1) Search for and collect the records from field facilities;

(2) Search for, collect, and review a voluminous amount of records which are part of a single request; or

(3) Consult with another agency before releasing records.

(c) If we are extending the deadline for more than an additional 10 working days, we will ask you if you wish to modify your request so that we can meet the deadline. If you do not agree to modify your request, we will work with you to arrange an alternative time schedule for review and release.

(d) If you have requested records that we do not have the authority to release without consulting another agency (e.g. security-classified records), we will refer copies of the documents to the appropriate agency. NARA will send you an initial response to your FOIA requests within 20 working days informing you of this referral. However, the final response to your FOIA can only be made when the agency to which we have referred the documents responds to us.

(e) If you have requested Presidential records and NARA decides to grant you access, NARA must inform the incumbent and former Presidents of our intention to disclose information from those records. After receiving the notice, the incumbent and former Presidents have 30 days in which to decide whether or not to invoke Executive privilege to deny access to the information. NARA will send you an initial response to your FOIA request within 20 working days informing you of the status of your request. However, the final response to your FOIA can only be made at the end of the 30-day Presidential notification period.

(f) If you have requested records containing confidential commercial information that is less than 10 years old, we will contact the submitter of the requested information. NARA will send you an initial response to your FOIA request within 20 working days informing you of our actions. See § 1250.82 for the time allowed the submitter to object to the release of confidential commercial information. If the records contain confidential commercial information that is 10 years old or older, NARA staff will not contact the submitter, but will process the request under normal FOIA procedures.

§ 1250.28 Will NARA ever expedite the review of the records I requested?

(a) In certain cases NARA will move your FOIA request or appeal to the head of our FOIA queue. We will do this for any of the following reasons:

(1) A reasonable expectation of an imminent threat to an individual's life or physical safety;

(2) A reasonable expectation of an imminent loss of a substantial due process right; or

(3) An urgent need to inform the public about an actual or alleged Federal government activity (this last criterion applies only to those requests made by a person primarily engaged in disseminating information to the public).

(b) NARA can expedite requests, or segments of requests, only for records over which we have control. If NARA must refer a request to another agency, we will so inform you and suggest that you seek expedited review from that agency. We cannot expedite requests for Presidential records or shorten the 30-day Presidential notification period.

§ 1250.30 How do I request expedited processing?

You must submit a statement, certified to be true and correct to the best of your knowledge, explaining the basis of your need for expedited processing. All such requests must be sent to the appropriate official at the address listed in § 1250.22. You may request expedited processing when you first request records or at any time during our processing of your request.

§ 1250.32 How quickly will NARA process an expedited request?

We will respond to you within 10 days of our receipt of your request for expedited processing. If we grant your request, the NARA office responsible for the review of the requested records will process your request as quickly as possible. If we deny your request for expedited processing and you decide to appeal our denial, we will also expedite our review of your appeal.

§ 1250.34 How will I know if NARA is going to release the records I requested?

Once NARA decides to release the requested records, in whole or in part, we will inform you in writing. Our response will tell you how much responsive material we found, where you may review the records, and the copying or other charges due. If the records you sought were released only in part, we will estimate, if possible, the amount of the withheld information. Also, if we deny any part of your request, our response will explain the reasons for the denial, which FOIA exemptions apply, and your right to appeal our decisions.

§ 1250.36 When will NARA deny a FOIA request?

The FOIA contains nine exemptions under which information may be exempted from release. Given the age and nature of archival records, many of these exemptions apply to only a few of the records in our custody. We will only withhold information where we must (such as information which remains classified, or information which is specifically closed by statute) or we reasonably foresee that disclosure would cause a harm. In addition if only part of a record must be withheld, NARA will provide access to the rest of the information in the record. Categories of information that may be exempt from disclosure under the FOIA are as follows:

SECTION OF THE FOIA:	REASON FOR EXEMPTION:
5 U.S.C. 552(b)(1)	Specifically authorized under criteria established by an Executive order to be kept secret in the interest of national defense or foreign policy and are in fact properly classified under the Executive order.
5 U.S.C. 552(b)(2)	Related solely to the internal personnel rules and practices of an agency.

SECTION OF THE FOIA:	REASON FOR EXEMPTION:
5 U.S.C. 552(b)(3)	Specifically exempted from disclosure by statute (other than section 552b of this title), provided that the statute: (A) Requires that the matters be withheld from the public in such a manner as to leave no discretion on the issue; or (B) Establishes particular criteria for withholding or refers to particular types of matters to be withheld.
5 U.S.C. 552(b)(4)	Trade secrets and commercial or financial information obtained from a person that are privileged or confidential.
5 U.S.C. 552(b)(5)	Inter-agency or intra-agency memorandums or letters which would not be available by law to a party other than an agency in litigation with the agency.
5 U.S.C. 552(b)(6)	Personnel and medical files and similar files the disclosure of which would constitute a clearly unwarranted invasion of personal privacy.
5 U.S.C. 552(b)(7)	Records or information compiled for law enforcement purposes, but only to the extent that the production of such law enforcement records or information: (A) Could reasonably be expected to interfere with enforcement proceedings: (B) Would deprive a person of a right to a fair trial or an impartial adjudication; (C) Could reasonably be expected to constitute an unwarranted invasion of personal privacy; (D) Could reasonably be expected to disclose the identity of a confidential source, including a State, local, or foreign agency or authority or any private institution which furnished information on a confidential basis, and, in the case of a record or information compiled by a criminal law enforcement authority in the course of a criminal investigation, or by an agency conducting lawful national security intelligence investigation, information furnished by a confidential source; (E) Would disclose techniques and procedures for law enforcement investigations or prosecutions, or would disclose guidelines for law enforcement investigations or prosecutions if such disclosure could reasonably be expected to risk circumvention of the law; or (F) Could reasonably be expected to endanger the life or physical safety of any individual.

SECTION OF THE FOIA:	REASON FOR EXEMPTION:
5 U.S.C. 552(b)(8)	Contained in or related to examination, operating, or condition reports prepared by, on behalf of, or for the use of an agency responsible for the regulation or supervision of financial institutions.
5 U.S.C. 552(b)(9)	Geological and geophysical information and data, including maps, concerning wells.

§ 1250.38 In what format will NARA provide copies?

After all applicable fees are paid, NARA will provide you copies of records in the format you request if the records already exist in that format, or if they are readily reproducible in the format you request.

Subpart C—Fees

§ 1250.50 Will I be charged for my FOIA request?

(a) Fees and fee waivers for FOIA requests for NARA operational records are listed in this subpart.

(b) Fees for FOIA requests for NARA archival records are listed in 36 CFR part 1258.

§ 1250.52 How much will I have to pay for a FOIA request for NARA operational records?

(a) If you are a commercial use requester, we will charge you fees for searching, reviewing, and copying.

(b) If you are an educational or scientific institution requester, or a member of the news media, we will charge you fees for copying. However, we will not charge you for copying the first 100 pages.

(c) If you do not fall into either of the categories in paragraphs (a) and (b) of this section, then we will charge you search and copying fees. However, we will not charge you for the first 2 hours of search time or for copying the first 100 pages.

§ 1250.54 General information on fees for NARA operational records.

(a) NARA is able to make most of its records available for examination at the NARA facility where the records are located. Whenever this is possible, you may review the records in a NARA research room at that facility.

(b) If you want NARA to supply you with copies, we will normally require you to pay all applicable fees in accordance with § 1250.52 before we provide you with the copies.

(c) NARA may charge search fees even if the records are not releasable or even if we do not find any responsive records during our search.

(d) If you are entitled to receive 100 free pages, but the records cannot be copied onto standard size (8.5″ by 11″) photocopy paper, we will copy them on larger paper and will reduce your copy fee by the normal charge for 100 standard size photocopies. If the records are not on textual media (e.g., photographs or electronic files) we will provide the equivalent of 100 pages of standard size paper copies for free.

(e) We will not charge you any fee if the total costs are $10 or less.

(f) If estimated search or review fees exceed $50, we will contact you. If you have specified a different limit that you are willing to spend, we will contact you only if we estimate the fees will exceed that amount.

(g) If you have failed to pay FOIA fees in the past, we will require you to pay your past-due bill before we begin processing your request. If we estimate that your fees may be greater than $250, we may require payment or a deposit before we begin processing your request.

(h) If we determine that you (acting either alone or with others) are breaking down a single request into a series of requests in order to avoid or reduce

fees, we may aggregate all these requests in calculating the fees.

§ 1250.56 Fee schedule for NARA operational records.

In responding to FOIA requests for operational records, NARA will charge the following fees, where applicable, unless we have given you a reduction or waiver of fees under § 1250.60.

(a) *Search fees*—(1) *Manual searching of records*. When the search is relatively straightforward and can be performed by a clerical or administrative employee, the search rate is $16 per hour (or fraction thereof). When the request is more complicated and must be done by a professional employee of NARA, the rate is $33 per hour (or fraction thereof)

(2) *Computer searching*. This is the actual cost to NARA of operating the computer and the salary of the operator. When the search is relatively straightforward and can be performed by a clerical or administrative employee, the search rate is $16 per hour (or fraction thereof). When the request is more complicated and must be done by a professional employee of NARA, the rate is $33 per hour (or fraction thereof).

(b) *Review fees*. (1) Review fees are charged for time spent examining all documents that are responsive to a request to determine if any are exempt from release and to determine if NARA will release exempted records.

(2) The review fee is $33 per hour (or fraction thereof).

(3) NARA will not charge review fees for time spent resolving general legal or policy issues regarding the application of exemptions.

(c) *Reproduction fees*—(1) *Self-service photocopying*. At NARA facilities with self-service photocopiers, you may make reproductions of released paper documents for 15 cents per page.

(2) *Photocopying standard size pages*. This charge is 20 cents per page when NARA produces the photocopies.

(3) *Reproductions of electronic records*. The direct costs to NARA for staff time for programming, computer operations, and printouts or electromagnetic media to reproduce the requested information will be charged to requesters. When the work is relatively straightforward and can be performed by a clerical or administrative employee, the rate is $16 per hour (or fraction thereof). When the request is more complicated and must be done by a professional employee of NARA, the rate is $33 per hour (or fraction thereof).

(4) *Copying other media*. This is the direct cost to NARA of the reproduction. Specific charges will be provided upon request.

§ 1250.58 Does NARA ever waive FOIA fees for NARA operational records?

(a) NARA will waive or reduce your fees for NARA operational records only if your request meets both of the following criteria:

(1) The request is in the public interest (i.e., information likely to contribute significantly to public understanding of the operations and activities of the government); and

(2) The request is not primarily in your commercial interest.

(b) All requests for fee waivers or reductions must be made at the time of the initial FOIA request. All requests must include the grounds for requesting the reduction or elimination of fees.

§ 1250.60 How will NARA determine if I am eligible for a fee waiver for NARA operational records?

(a) If you request a fee waiver, NARA will consider the following in reviewing how your request meets the public interest criteria in § 1250.58(a)(1):

(1) How do the records pertain to the operations and activities of the Federal Government?

(2) Will release reveal any meaningful information about Federal Government activities that is not already publicly known?

(3) Will disclosure to you advance the understanding of the general public on the issue?

(4) Do you have expertise in or a thorough understanding of these records?

(5) Will you be able to disseminate this information to a broad spectrum of the public?

(6) Will disclosure lead to a significantly greater understanding of the Government by the public?

(b) After reviewing your request and determining that there is a substantial public interest in release, NARA will also review it to determine if it furthers your commercial interests. If it does, you are not eligible for a fee waiver.

Subpart D—Appeals

§ 1250.70 What are my appeal rights under FOIA?

You may appeal any of the following decisions:

(a) The refusal to release a record, either in whole or in part;

(b) The determination that a record does not exist or cannot be found;

(c) The determination that the record you sought was not subject to the FOIA;

(d) The denial of a request for expedited processing; or

(e) The denial of a fee waiver request.

§ 1250.72 How do I file an appeal?

(a) All appeals must be in writing and received by NARA within 35 calendar days of the date of NARA's denial letter. Mark both your letter and envelope with the words ''FOIA Appeal,'' and include a copy of your initial request and our denial.

(b) In your appeal, explain why we should release the records, grant your fee waiver request, or expedite the processing of your request. If we were not able to find the records you wanted, explain why you believe our search was inadequate. If we denied you access to records and told you that those records were not subject to FOIA, please explain why you believe the records are subject to FOIA.

§ 1250.74 Where do I send my appeal?

(a) If NARA's Inspector General denied your request, send your appeal to the Archivist of the United States, (ATTN: FOIA Appeal Staff), Room 4200, National Archives and Records Administration, 8601 Adelphi Road, College Park, Maryland 20740-6001.

(b) Send all other appeals to the Deputy Archivist of the United States, (ATTN: FOIA Appeal Staff), Room 4200, National Archives and Records Administration, 8601 Adelphi Road, College Park, Maryland 20740-6001.

(c) Denials under FOIA of access to national security information accessioned into the National Archives of the United States are made by designated officials of the originating or responsible agency or by NARA under a written delegation of authority. You must appeal determinations that records remain classified for reasons of national security to the agency with responsibility for protecting and declassifying that information. NARA will provide you with the necessary appeal information in those cases. You can find additional information on access to national security classified records at NARA in 36 CFR part 1254.

§ 1250.76 May I email my FOIA appeal?

Yes, you may submit a FOIA appeal via email to *http://www.archives.gov/global_pages/inquire_form.html*. You must put the words ''FOIA Appeal'' in the subject line of your email message. The body of your message must contain the information in § 1250.72(b).

[66 FR 16376, Mar. 23, 2001, as amended at 67 FR 43253, June 27, 2002]

§ 1250.78 How does NARA handle appeals?

NARA will respond to your appeal within 20 working days after its receipt of the appeal by NARA. If we reverse or modify our initial decision, we will inform you in writing and reprocess your request. If we do not change our initial decision, our response to you will explain the reasons for our decision, any FOIA exemptions that apply, and your right to judicial review of our decision.

Subpart E—Special Situations

§ 1250.80 How does a submitter identify records containing confidential commercial information?

When a person submits records that contain confidential commercial information to NARA, that person may state in writing that all or part of the records are exempt from disclosure under exemption (b)(4) of the FOIA.

§ 1250.82 How will NARA handle a FOIA request for confidential commercial information?

If NARA receives a FOIA request for records containing confidential commercial information or for records that we believe may contain confidential commercial information and if the information is less than 10 years old, we will follow these procedures:

(a) If, after reviewing the records in response to a FOIA request, we believe that the records may be opened, we will make reasonable efforts to inform the submitter of this. When the request is for information from a single or small number of submitters, NARA will send a notice via registered mail to the submitter's last known address. Our notice to the submitter will include a copy of the FOIA request and will tell the submitter the time limits and procedures for objecting to the release of the requested material.

(b) The submitter will have 5 working days from the receipt of our notice to object to the release and to explain the basis for the objection. The NARA FOIA Officer may extend this period for an additional 5 working days.

(c) NARA will review and consider all objections to release that are received within the time limit. If we decide to release the records, we will inform the submitter in writing. This notice will include copies of the records as we intend to release them and our reasons for deciding to release. We will also inform the submitter that we intend to release the records 10 working days after the date of the notice unless a U.S. District Court forbids disclosure.

(d) If the requester files a lawsuit under the FOIA for access to any withheld records, we will inform the submitter.

(e) We will notify the requester whenever we notify the submitter of the opportunity to object or to extend the time for objecting.

§ 1250.84 Service of subpoena or other legal demand for NARA operational records.

(a) A subpoena duces tecum or other legal demand for the production of NARA operational records must be addressed to the Office of the General Counsel (NGC), Room 3110, National Archives and Records Administration, 8601 Adelphi Road, College Park, MD, 20740-6001.

(b) The Archivist of the United States and the General Counsel are the only NARA employees authorized to accept, on behalf of NARA, service of a subpoena duces tecum or other legal demands for NARA operational records.

(c) Regulations concerning service of a subpoena duces tecum or other legal demand for archival records accessioned into the National Archives of the United States, records of other agencies in the custody of the Federal records centers, and donated historical materials are located at 36 CFR 1254.8.

PART 1252—PUBLIC USE OF RECORDS, DONATED HISTORICAL MATERIALS, AND FACILITIES; GENERAL

Sec.
1252.1 Scope.
1252.2 Definitions.

AUTHORITY: 44 U.S.C. 2104(a).

§ 1252.1 Scope.

This subchapter prescribes rules and procedures governing the public use of records and donated historical materials in the custody of the National Archives and Records Administration (NARA). Except for part 1250, this subchapter does not apply to current operating records of NARA. This subchapter also prescribes rules and procedures governing the public use of certain NARA facilities.

[59 FR 29191, June 6, 1994]

§ 1252.2 Definitions.

The following definitions are established for terms used in this subchapter.

Archives or archival records mean Federal records that have been determined by NARA to have sufficient historical or other value to warrant their continued preservation by the U.S. Government, and have been transferred to the National Archives of the United States.

Director means the head of a Presidential library, the head of a Presidential Materials Staff, the head of a

NARA division, branch, archival center, or unit responsible for servicing archival records, the head of a regional archives, or the head of a Federal records center.

Documents mean, for purposes of part 1254 of this chapter, archives, FRC records, donated historical materials, Nixon Presidential historical materials, and Presidential records, regardless of the media on which they are contained. Document form may include paper, microforms, photographs, sound recordings, motion pictures, maps, drawings, and electronic files.

Donated historical materials means books, correspondence, documents, papers, pamphlets, magnetic tapes, pictures, photographs, plats, maps, films, motion pictures, sound recordings, and other documental media having historical or commemorative value accepted by NARA from a source other than an agency of the U.S. Government.

Federal records center includes the Washington National Records Center, the National Personnel Records Center, and the Federal records centers listed in § 1253.6 of this chapter.

Federal records center records (FRC records) mean records which, pending their transfer to the National Archives of the United States or their disposition in any other manner authorized by law, have been transferred to a Federal records center operated by NARA.

Nixon Presidential historical materials has the meaning specified in § 1275.16 of this chapter.

Presidential records has the meaning specified in § 1270.14 of this chapter.

Records mean records or microfilm copies of records transferred to NARA under 44 U.S.C. 2107 and 3103; namely, archives and Federal records center records as the terms are defined in § 1252.2. The term *records* does not include current operating records of NARA, the public availability of which is governed by part 1250 of this chapter, or donated historical materials as defined in this section.

Researcher means a person who has been granted access to original documents or copies of documents.

[33 FR 4885, Mar. 22, 1968, 42 FR 13022, Mar. 8, 1977, and 49 FR 33253, Aug. 22, 1984. Redesignated and amended at 50 FR 15723, 15726, Apr. 19, 1985; 59 FR 29191, June 6, 1994]

PART 1253—LOCATION OF RECORDS AND HOURS OF USE

Sec.

1253.1 National Archives Building.
1253.2 National Archives at College Park.
1253.3 Presidential Libraries.
1253.4 Washington National Records Center.
1253.5 National Personnel Records Center.
1253.6 Records Centers.
1253.7 Regional Archives.
1253.8 Are NARA research room facilities closed on Federal holidays?

AUTHORITY: 44 U.S.C. 2104(a).

SOURCE: 65 FR 38730, June 22, 2000, unless otherwise noted.

§ 1253.1 National Archives Building.

(a) The National Archives Building is located at 700 Pennsylvania Avenue, NW., Washington, DC 20408. Business hours are 8:45 a.m. to 5:15 p.m., Monday through Friday, except Federal holidays when the building is closed. Hours for the Central Research Room and Microfilm Research Room are as follows, except Federal holidays:

(1) Monday and Wednesday, 8:45 a.m. to 5 p.m.;

(2) Tuesday, Thursday, and Friday, 8:45 a.m. to 9 p.m.; and

(3) Saturday, 8:45 a.m. to 4:45 p.m.

(b) The phone number for the research rooms is 800–234–8861.

(c) The location and business hours of the Office of the Federal Register are located in 1 CFR 2.3.

§ 1253.2 National Archives at College Park.

(a) The National Archives at College Park is located at 8601 Adelphi Road, College Park, MD 20740–6001. Business hours are 8:45 a.m. to 5:15 p.m., Monday through Friday, except Federal holidays when the building is closed.

(b) Research complex hours are as follows, except Federal holidays:

(1) Monday and Wednesday, 8:45 a.m. to 5 p.m.;

(2) Tuesday, Thursday, and Friday, 8:45 a.m. to 9 p.m.; and

(3) Saturday, 8:45 a.m. to 4:45 p.m.

(c) The phone number for the research complex is 800–234–8861.

§ 1253.3 Presidential Libraries.

The Presidential libraries are open for research from 9 a.m. to 5 p.m., Monday through Friday, except Federal holidays when they are closed. NARA recommends that researchers contact the library before visiting for research. The Presidential library museums are open every day except Thanksgiving, December 25, and January 1 (with the exception of the Lyndon Baines Johnson Library that is only closed December 25). For more specific information about museum hours, please contact the libraries directly or visit the NARA web site at http://www.nara.gov/nara/president/address.html. Information for each library is as follows:

(a) Herbert Hoover Library is located at 210 Parkside Dr., West Branch, IA (mailing address: PO Box 488, West Branch, IA 52358–0488). The phone number is 319–643–5301 and the fax number is 319–643–5825. The e-mail address is *hoover.library@nara.gov*.

(b) Franklin D. Roosevelt Library is located at 4079 Albany Post Rd., Hyde Park, NY 12538–1999. The phone number is 845–229–8114 and the fax number is 845–229–0872. The e-mail address is *roosevelt.library@nara.gov*.

(c) Harry S. Truman Library is located at 500 W. US Hwy 24, Independence, MO 64050–1798. The phone number is 816–833–1400 and the fax number is 816–833–4368. The e-mail address is *truman.library@nara.gov*.

(d) Dwight D. Eisenhower Library is located at 200 SE Fourth Street, Abilene, KS 67410–2900. The phone number is 785–263–4751 and the fax number is 785–263–4218. The e-mail address is *eisenhower.library@nara.gov*.

(e) John Fitzgerald Kennedy Library is located at Columbia Point, Boston, MA 02125–3398. The phone number is 617–929–4500 and the fax number is 617–929–4538. The e-mail address is *kennedy.library@nara.gov*.

(f) Lyndon Baines Johnson Library is located at 2313 Red River St., Austin, TX 78705–5702. The phone number is 512–916–5137 and the fax number is 512–916–5171. The e-mail address is *johnson.library@nara.gov*.

(g) Gerald R. Ford Museum is located at 303 Pearl St., Grand Rapids, MI 49504–5353. The phone number is 616–451–9263 and the fax number is 616–451–9570. The e-mail address is *ford.museum@nara.gov*. Gerald R. Ford Library is located at 1000 Beal Avenue, Ann Arbor, MI 48109–2114. The phone number is 734–741–2218 and the fax number is 734–741–2341. The e-mail address is *ford.library@nara.gov*.

(h) Jimmy Carter Library is located at 441 Freedom Parkway, Atlanta, GA 30307–1498. The phone number is 404–331–3942 and the fax number is 404–730–2215. The e-mail address is *carter.library@nara.gov*.

(i) Ronald Reagan Library is located at 40 Presidential Dr., Simi Valley, CA 93065–0699. The phone number is 800–410–8354 or 805–522–8444 and the fax number is 805–522–9621. The e-mail address is *reagan.library@nara.gov*.

(j) George Bush Library is located at 1000 George Bush Drive West, College Station, TX 77845. The phone number is 979–260–9554 and the fax number is 979–260–9557. The e-mail address is *bush.library@nara.gov*.

[65 FR 38730, June 22, 2000, as amended at 67 FR 43254, June 27, 2002]

§ 1253.4 Washington National Records Center.

Washington National Records Center is located at 4205 Suitland Road, Suitland, MD (mailing address: Washington National Records Center, 4205 Suitland Road, Suitland, MD, 20746–8001). The hours are 8 a.m. to 4 p.m., Monday through Friday, except Federal holidays. The phone number is 301–457–7000.

§ 1253.5 National Personnel Records Center.

(a) *Military Personnel Records.* NARA—National Personnel Records Center—Military Personnel Records is located at 9700 Page Ave., St. Louis, MO 63132–5100. The hours are 7:30 a.m. to 3:45 p.m., Monday through Friday, except Federal holidays.

(b) *Civilian Personnel Records.* NARA—National Personnel Records Center—Civilian Personnel Records is located at 111 Winnebago St., St. Louis, MO 63118–4199. The hours are 7:30 a.m. to 3:45 p.m., Monday through Friday, except Federal holidays.

[67 FR 43254, June 27, 2002]

§ 1253.6 Records Centers.

All records centers are closed on Federal holidays. Information for each center is as follows:

(a) NARA—Northeast Region (Boston) is located at the Frederick C. Murphy Federal Center, 380 Trapelo Rd., Waltham, MA 02452–6399. The hours are 8 a.m. to 4:30 p.m., Monday through Friday. The telephone number is 781–647–8104.

(b) NARA—Northeast Region (Pittsfield, MA) is located at 10 Conte Drive, Pittsfield, MA 01201–8230. The hours are 8 a.m. to 4:30 p.m., Monday through Friday. The telephone number is 413–445–6885.

(c) NARA—Mid Atlantic Region (Northeast Philadelphia) is located at 14700 Townsend Rd., Philadelphia, PA 19154–1096. The hours are 8 a.m. to 4:30 p.m., Monday through Friday. The telephone number is 215–671–9027.

(d) NARA—Southeast Region (Atlanta) is located at 1557 St. Joseph Ave., East Point, GA 30344–2593. The hours are 7 a.m. to 4 p.m., Monday through Friday. The telephone number is 404–763–7474.

(e) NARA—Great Lakes Region (Dayton) is located at 3150 Springboro Rd., Dayton, OH 45439–1883. The hours are 7 a.m. to 4:30 p.m., Monday through Friday. The telephone number is 937–225–2852.

(f) NARA—Great Lakes Region (Chicago) is located at 7358 S. Pulaski Rd., Chicago, IL 60629–5898. The hours are 8 a.m. to 4:30 p.m., Monday through Friday. The telephone number is 773–581–7816.

(g) NARA—Central Plains Region (Kansas City) is located at 2312 E. Bannister Rd., Kansas City, MO 64131–3011. The hours are 8 a.m. to 4 p.m., Monday through Friday. The telephone number is 816–926–6920.

(h) NARA—Central Plains Region (Lee's Summit, MO) is located at 200 Space Center Drive, Lee's Summit, MO 64064–1182. The hours are 8 a.m. to 4 p.m., Monday through Friday. The telephone number is 816–823–6272.

(i) NARA—Southwest Region (Fort Worth) is located at 501 West Felix St., Bldg. 1, Fort Worth, TX (mailing address: P.O. Box 6216, Fort Worth, TX 76115–0216). The hours are 8 a.m. to 2:00 p.m., Monday through Friday. The telephone number is 817–334–5515.

(j) NARA—Rocky Mountain Region (Denver) is located at Building 48, Denver Federal Center, West 6th Ave. and Kipling Street, Denver, CO (mailing address: PO Box 25307, Denver, CO 80225–0307). The hours are 7:30 a.m. to 4 p.m., Monday through Friday. The telephone number is 303–236–0804.

(k) NARA—Pacific Region (San Francisco) is located at 1000 Commodore Dr., San Bruno, CA 94066–2350. The hours are 7:30 a.m. to 4 p.m., Monday through Friday. The telephone number is 650–876–9001.

(l) NARA—Pacific Region (Laguna Niguel, CA) is located at 24000 Avila Rd., 1st Floor East Entrance, Laguna Niguel, CA (mailing address: PO Box 6719, Laguna Niguel, CA 92607–6719). The hours are 8 a.m. to 4:30 p.m., Monday through Friday. The telephone number is 949–360–2626.

(m) NARA—Pacific Alaska Region (Seattle) is located at 6125 Sand Point Way NE, Seattle, WA 98115–7999. The hours are 7:45 a.m. to 4:15 p.m., Monday through Friday. The telephone number is 206–526–6501.

[65 FR 38730, June 22, 2000, as amended at 67 FR 43255, June 27, 2002]

§ 1253.7 Regional Archives.

Most regional archives offer extended research room hours for microfilm research only. Information on extended hours is available from individual facilities. Regional archives are closed on Federal holidays. Information on each regional archives facility is as follows:

(a) NARA—Northeast Region (Boston) is located in the Frederick C. Murphy Federal Center, 380 Trapelo Rd., Waltham, MA 02452–6399. The hours are 8 a.m. to 4:30 p.m., Monday through Friday. The telephone number is 781–647–8100.

(b) NARA—Northeast Region (Pittsfield, MA) is located at 10 Conte Drive, Pittsfield, MA 01201–8230. The hours are 8 a.m. to 4:30 p.m., Monday through Friday. The telephone number is 413–445–6885.

(c) NARA—Northeast Region (New York City) is located at 201 Varick St., New York, NY 10014–4811. The hours are 8 a.m. to 4:30 p.m., Monday through

Friday. The telephone number is 212–337–1300.

(d) NARA—Mid Atlantic Region (Center City Philadelphia) is located at 900 Market St., Philadelphia, PA 19107–4292. The hours are 8 a.m. to 5 p.m., Monday through Friday. The telephone number is 215–597–3000.

(e) NARA—Southeast Region (Atlanta) is located at 1557 St. Joseph Ave., East Point, GA 30344–2593. The hours are 7 a.m. to 4 p.m., Monday through Friday. The telephone number is 404–763–7474.

(f) NARA—Great Lakes Region (Chicago) is located at 7358 S. Pulaski Rd., Chicago, IL 60629–5898. The hours are 8 a.m. to 4:15 p.m., Monday through Friday. The telephone number is 773–581–7816.

(g) NARA—Central Plains Region (Kansas City) is located at 2312 E. Bannister Rd., Kansas City, MO 64131–3060. The hours are 7:30 a.m. to 4 p.m., Monday through Friday. The telephone number is 816–926–6920.

(h) NARA—Southwest Region (Fort Worth) is located at 501 West Felix St., Bldg. 1, Dock 1, Fort Worth, TX (mailing address: P.O. Box 6216, Fort Worth, TX, 76115–0216). The hours are 6:30 a.m. to 4 p.m., Monday through Friday. The telephone number is 817–334–5525.

(i) NARA—Rocky Mountain Region (Denver) Textual Research room is located at Building 48, Denver Federal Center, West 6th Ave. and Kipling Street, Denver, CO. The Microfilm Research room is located at Building 46, Denver Federal Center, West 6th Ave. and Kipling Street, Denver, CO. (The mailing address: PO Box 25307, Denver, CO 80225–0307). The hours are 7:30 a.m. to 3:45 p.m., Monday through Friday. The telephone number is 303–236–0817.

(j) NARA—Pacific Region (Laguna Niguel, CA) is located at 24000 Avila Rd., 1st Floor East Entrance, Laguna Niguel, CA (mailing address: PO Box 6719, Laguna Niguel, CA 92607–6719). The hours are 8 a.m. to 4:30 p.m., Monday through Friday. The telephone number is 949–360–2641.

(k) NARA—Pacific Region (San Francisco) is located at 1000 Commodore Dr., San Bruno, CA 94066–2350. The hours are 7:30 a.m. to 4 p.m., Monday through Friday. The telephone number is 650–876–9009.

(l) NARA—Pacific Alaska Region (Seattle) is located at 6125 Sand Point Way NE, Seattle, WA 98115–7999. The hours are 7:45 a.m. to 4:15 p.m., Monday through Friday. The telephone number is 206–526–6501.

(m) NARA—Pacific Alaska Region (Anchorage) is located at 654 West Third Avenue, Anchorage, AK 99501–2145. The hours are 8 a.m. to 4 p.m., Monday through Friday. The telephone number is 907–271–2443.

[65 FR 38730, June 22, 2000, as amended at 67 FR 43255, June 27, 2002]

§ 1253.8 Are NARA research room facilities closed on Federal holidays?

(a) NARA research room facilities are closed on all Federal holidays.

(b) When a Federal holiday is on a Saturday but the official observance is on the preceding Friday, the research rooms that are normally open on Saturday will be closed on the Saturday as well as the Friday.

[67 FR 43255, June 27, 2002]

PART 1254—AVAILABILITY OF RECORDS AND DONATED HISTORICAL MATERIALS

Subpart A—General

Sec.
1254.1 General provisions.
1254.2 Location of documents and hours of use.
1254.4 Research procedures.
1254.6 Researcher identification card.
1254.8 Subpoenas and other legal demands for records transferred to the National Archives and Records Administration.

Subpart B—Research Room Rules

1254.10 Registration.
1254.12 Researcher's responsibility for documents.
1254.14 Restrictions on using microfilm readers.
1254.16 Prevention of damage to documents.
1254.17 Keeping documents in order.
1254.18 Removal or mutilation of documents.
1254.20 Conduct.
1254.24 Locker use policy.
1254.25 Rules for public access use of the Internet on NARA-supplied personal computers.
1254.26 Additional rules for use of certain research rooms in NARA facilities in the Washington, DC, area.

1254.27 Additional rules for use of certain research rooms in regional records services facilities and Presidential libraries.

Subpart C—Access to Unclassified Records and Donated Historical Materials

1254.30 Archives.
1254.32 FRC records.
1254.34 Records of defunct agencies.
1254.35 Presidential records and Nixon Presidential materials.
1254.36 Donated historical materials.

Subpart D—Access to National Security Information

1254.40 Access to national security information.
1254.44 Freedom of Information Act (FOIA) requests.
1254.46 Public requests for mandatory review of classified information under Executive Order 12356.
1254.48 Access by historical researchers and former Presidential appointees.
1254.50 Fees.

Subpart E—Information, Reproduction, and Authentication Services

1254.70 NARA copying services.
1254.71 Researcher use of the self-service card-operated copiers in the National Archives Building and the National Archives at College Park.
1254.72 Information about documents.
1254.74 Information from documents.
1254.76 Certification of copies.

Subpart F—Microfilming Archival Records

1254.90 General.
1254.92 Requests to microfilm records and donated historical materials.
1254.94 Criteria for granting the requests.
1254.96 Microfilm preparation.
1254.98 Equipment standards.
1254.100 Microfilming procedures.
1254.102 Rescinding permission.

AUTHORITY: 44 U.S.C. 2101–2118; 5 U.S.C. 552; and E.O. 12600, 52 FR 23781, 3 CFR, 1987 Comp., p. 235.

EDITORIAL NOTE: Nomenclature changes to part 1254 appear at 59 FR 29192, June 6, 1994.

Subpart A—General

§ 1254.1 General provisions.

(a) Researchers will normally use documents in designated research rooms only.

(b) Original documents will not normally be made available when microfilm copies or other alternative copies of the documents are available.

(c) Persons seeking information that is published and readily available will normally be referred to a public library.

(d) A Regional Administrator, a director of a Presidential Library, or a director of a Washington, DC, area research unit may require that researchers under the age of 14 years be accompanied by an adult researcher who agrees in writing to be present when the documents are used and to be responsible for compliance with the research room rules set forth in Subpart B.

(e) Requests received in the normal course of reference service that do not specifically cite the Freedom of Information Act (5 U.S.C. 552) are not considered requests made under the act. Requests under the act must follow the procedure set forth in subpart C or subpart D of this part.

(f) Certain documents in the custody of NARA are available for exhibit, but are loaned only if the exhibitor meets exacting requirements regarding security, insurance coverage and humidity and temperature control of the exhibit area. These requirements may be obtained by writing to National Archives (NE), Washington, DC 20408.

[33 FR 4885, Mar. 22, 1968, as amended at 40 FR 7924, Feb. 24, 1975; 40 FR 28610, July 8, 1975; 42 FR 13022, Mar. 8, 1977. Redesignated and amended at 50 FR 15723, 15726, Apr. 19, 1985; 59 FR 29192, June 6, 1994; 64 FR 19901, Apr. 23, 1999]

§ 1254.2 Location of documents and hours of use.

(a) Researchers should identify the location of the documents needed. Information about the location of records may be obtained by writing to the National Archives and Records Administration (NWCC1), Washington, DC 20408; by sending an e-mail message to *http://www.archives.gov/global_pages/inquire_form.html;* sending a fax request to (301) 837–0483; or calling (202) 501–5400 or (301) 837–2000.

(b) The locations and hours of operation (expressed in local time) of the

depositories administered by the National Archives and Records Administration are shown in part 1253 of this chapter.

(c) Except for Federal holidays and other times specified by the Archivist or other authorized NARA officials, documents will be made available according to the schedule set forth in part 1253.

(d) In addition to the times specified in part 1253, documents may be made available at such other times as are authorized by a director.

[40 FR 7925, Feb. 24, 1975, as amended at 42 FR 13022, Mar. 8, 1977; 49 FR 33253, Aug. 22, 1984. Redesignated at 50 FR 15723, Apr. 19, 1985, and amended at 56 FR 2135, Jan. 22, 1991; 59 FR 29192, June 6, 1994; 64 FR 19901, Apr. 23, 1999; 67 FR 43254, June 27, 2002]

§ 1254.4 Research procedures.

(a) Before applying to use documents, the researcher should ask the depository holding them whether the documents are available, whether there are enough documents to warrant a visit, or whether copies would be more practical.

(b) Researchers must apply in person at the depository that has custody of the documents.

(c) Researchers who wish to use documents not on microfilm in a depository where the microfilm research room is separate from textual research rooms, must complete a researcher identification application form and provide the information needed to decide which documents can be made available. Researchers who wish to use only microfilm documents in a depository where the microfilm research room is not separate from textual research rooms must also comply with this paragraph. Applicants must show identification containing a picture or physical description of the applicant, e.g., a driver's license or school identification card. Exceptions to this requirement must be approved by the director. If applying for access to large quantities of documents or to documents that are especially fragile or valuable, the researcher may be required to furnish additional information about personal or professional qualifications or to furnish additional reasons why access is required. The collection of information contained in this paragraph has been approved by the Office of Management and Budget with the control number 3095–0016.

(d) A researcher will not be issued a researcher identification card if the branch chief or director of the relevant repository determines that:

(1) The documents which the researcher wishes to use are not in the legal custody of NARA; or

(2) The researcher is not interested in documents maintained by NARA but in information contained in secondary sources available at other institutions.

(e) Researchers using only microfilm, where the microfilm research room is separate from textual research rooms, are not issued an identification card but must register as described in § 1254.10.

(f) In addition to the procedures in this section, researchers desiring to use archives that contain national security classified information must follow procedures in subpart D.

(g) The legal custody and control over access to records that are in the physical custody of the records centers, but not yet accessioned into the National Archives of the United States, remains with the agency. NARA informs researchers of the procedures required to obtain access.

[49 FR 33253, Aug. 22, 1984. Redesignated at 50 FR 15723, Apr. 19, 1985, and amended at 56 FR 2135, Jan. 22, 1991; 59 FR 29192, June 6, 1994]

§ 1254.6 Researcher identification card.

(a) An identification card is issued to each person who is approved to use records other than microfilm. Cards are valid for three years, and may be renewed upon application. Cards are valid at each facility, except as described in paragraph (b) of this section. They are not transferable and must be presented if requested by a guard or research room attendant.

(b) At the National Archives in College Park and other NARA facilities that issue and use plastic researcher identification cards as part of their security systems, paper researcher identification cards issued at other NARA facilities are not valid. In facilities that use plastic researcher identification cards, NARA will issue a plastic

card to replace the paper card at no charge.

[67 FR 8200, Feb. 22, 2002; 67 FR 17286, Apr. 10, 2002]

§ 1254.8 Subpoenas and other legal demands for records transferred to the National Archives and Records Administration.

(a) Access to records transferred to a Federal records center is controlled by the instructions and restrictions imposed on NARA by the Federal agency that transferred the records to the Federal records center. NARA will honor a subpoena duces tecum or other legal demand for the production of these records, to the extent required by law, if the transferring agency has imposed no restrictions. When the transferring agency has imposed restrictions, NARA will notify the authority issuing the subpoena or other legal demand that NARA must abide by the agency-imposed restrictions and will request the authority to pursue the matter directly with the transferring agency.

(b) The Archivist of the United States, the General Counsel (NGC) or his/her designee, and the Director of the Federal Records Center in which the records are stored are the only NARA officials authorized to accept a subpoena or other legal demand for records transferred to a Federal records center.

(c) A subpoena duces tecum or other legal demand for the production of documents designated as *archives* or *donated historical materials* administered by NARA may be served only on the Archivist of the United States, the General Counsel (NGC) or his/her designee, the appropriate Assistant Archivist, Director of a Regional Archives, or Director of a Presidential Library.

[50 FR 15727, Apr. 19, 1985, as amended at 59 FR 29192, June 6, 1994; 64 FR 19901, Apr. 23, 1999]

Subpart B—Research Room Rules

§ 1254.10 Registration.

Researchers must register each day they enter a research facility, furnishing the information on the registration sheet or scanning a bar-coded researcher identification card, and may be asked to provide additional personal identification.

[64 FR 19901, Apr. 23, 1999]

§ 1254.12 Researcher's responsibility for documents.

(a) The research room attendant may limit the quantity of documents delivered to a researcher at one time. The researcher must sign for the documents received and may be required to show his/her researcher identification card. The researcher is responsible for the proper handling of and prevention of damage to all documents delivered to him/her until he/she returns them. When the researcher is finished using the documents, the documents must be returned to the research room attendant. The reference service slip that accompanies the documents to the research room must not be removed. If asked to do so, the researcher must return documents as much as 15 minutes before closing time. Before leaving a research room, even for a short time, a researcher must notify the research room attendant and place all documents in their proper containers.

(b) When microfilm is available on a self-service basis, research room attendants will assist researchers in identifying research sources on microfilm and provide information concerning how to locate and retrieve the roll(s) of film containing the information of interest. The researcher is responsible for retrieving and examining the roll(s). Unless a researcher requires assistance in learning how to operate microfilm reading equipment, the researcher is expected to install the microfilm on the reader. Unless otherwise permitted, a researcher is limited to one roll of microfilm at a time. After using each roll, the researcher is responsible for refiling the roll of microfilm in the location from which it was removed, unless instructed otherwise.

(c) Researchers are responsible for complying with provisions of the Copyright Act (Title 17, United States Code) which governs the making and use of electrostatic copies or other reproductions of copyrighted materials.

[59 FR 29192, June 6, 1994, as amended at 64 FR 19901, Apr. 23, 1999]

§ 1254.14 Restrictions on using microfilm readers.

(a) Use of the microfilm readers in the National Archives Building will be on a first-come, first-served basis. When other researchers are waiting to use a microfilm reader, a 3-hour limit may be placed on using a reader. After 3 hours of machine use, the researcher may sign the waiting list for an additional 3-hour period.

(b) The number of researchers in the microfilm research room in the National Archives Building may be limited, for fire safety reasons, to those researchers assigned a microfilm reader.

(c) Directors of regional archives may permit reservations for use of microfilm readers and set time limits on use to meet local circumstances. Rules for use will be posted in the research room.

[59 FR 29193, June 6, 1994, as amended at 64 FR 19901, Apr. 23, 1999]

§ 1254.16 Prevention of damage to documents.

(a) Researchers must exercise all possible care to prevent damage to documents.

(b) Documents may not be used at a desk where there is food or liquid or where an ink pen is being used. Only pencils may be used in research rooms where original documents are used.

(c) Documents must not be leaned on, written on, folded anew, traced, or handled in any way likely to cause damage.

(d) Documents must be identified for reproduction only with a paper tab provided by NARA. Documents may not be identified with paper clips, rubber bands, self-stick notes or similar devices.

(e) Microfilm must be carefully removed from and returned, rewound, to the proper microfilm boxes. Care must be taken loading and unloading microfilm from microfilm readers. Damaged microfilm must be reported to the research room attendant as soon as it is discovered.

(f) Exceptionally valuable or fragile documents may be used only under the conditions specified by the research room attendant.

[59 FR 29193, June 6, 1994, as amended at 64 FR 19901, Apr. 23, 1999]

§ 1254.17 Keeping documents in order.

A researcher must keep unbound documents in the order in which they are delivered to him/her. Documents that appear to be in disorder must not be rearranged by the researcher, but must be referred to the research room attendant. Researchers may use only one folder at a time. Researchers are not allowed to remove documents from more than one container at a time. Researchers should bring to the attention of the research room attendant microfilm put in the wrong box or file cabinet.

[Redesignated and revised at 59 FR 29193, June 6, 1994]

§ 1254.18 Removal or mutilation of documents.

Researchers may not remove documents from a research room. Removing or mutilating documents is forbidden by law and is punishable by fine or imprisonment or both (18 U.S.C. 2071). Researchers must check personal belongings, including briefcases, folders, coats, newspapers, or containers of any kind before entering a research room. Upon leaving, researchers must present for examination any article that could contain documents. To ensure that documents are not unlawfully removed or mutilated, the director may issue and post at the entrance to the research room instructions supplementing the rules in subpart B.

[49 FR 33254, Aug. 22, 1984. Redesignated at 50 FR 15723, Apr. 19, 1985]

§ 1254.20 Conduct.

(a) *Regulations*. Researchers are subject to the provisions of part 1280 of this chapter and to all rules and regulations issued and posted or distributed by a facility director supplementing Subpart B of this part, including rules on the use of NARA equipment. Eating, drinking, chewing gum, or using smokeless tobacco products in a research room are prohibited. Smoking is prohibited in all NARA facilities. Loud talking and other activities likely to

disturb other researchers are also prohibited. Persons desiring to use typewriters, computers, sound recording devices, or similar equipment must work in areas designated by the research room attendant, when so required.

(b) *Revocation of research privileges.* Researchers who refuse to comply with the rules and regulations of a NARA facility, or by their actions or language demonstrate that they present a danger to documents or NARA property, or present a danger to or verbally or physically harass or annoy other researchers, NARA or contractor employees, or volunteers may have their research privileges revoked by NARA for up to 180 days. The revocation of research privileges means that a researcher loses research privileges at all NARA research rooms nationwide and, if the researcher holds a valid researcher identification card, the loss of the card. All NARA facilities will be notified of the revocation of research privileges. A researcher whose research privileges have been revoked will be sent a written notice of the reasons for the revocation within 3 work days of the action.

(c) *Reinstatement of research privileges.* The researcher has 30 calendar days after the date of revocation to appeal the action in writing and seek reinstatement of research privileges. Appeals should be mailed to the Archivist of the United States (address: National Archives and Records Administration (N), 8601 Adelphi Road, College Park, MD 20740–6001). The Archivist has 30 calendar days from receipt of an appeal to decide whether to reinstate research privileges. The response will be made in writing and sent to the researcher whose research privileges have been revoked. If the revocation of privileges is upheld or if no appeal is made, the researcher may request reinstatement of research privileges no earlier than 180 calendar days from the date the privileges were revoked. This request may include application for a new researcher identification card. The reinstatement of research privileges applies to all research rooms, except that in the case of a new researcher identification card, the researcher will be issued a card for a probationary period of 60 days. At the end of the probationary period, the researcher may apply for a new, unrestricted identification card, which will be issued if the researcher's conduct during the probationary period has been in accordance with the rules of conduct set forth in this part and in 36 CFR part 1280.

(d) *Extending the revocation period.* If the reinstatement of research privileges would pose a threat to the safety of persons, property, or NARA holdings, or if, in the case of a probationary identification card, the researcher has failed to comply with the rules of conduct for NARA facilities, NARA may extend the revocation of privileges for 180-day periods. Researchers will be sent a written notice all such extensions within 3 work days of NARA's decision to continue the revocation of research privileges. The researcher has 30 calendar days after the decision to extend the revocation of research privileges to appeal the action in writing. Appeals should be mailed to the Archivist at the address given above. The Archivist has 30 calendar days from receipt of an appeal to decide whether to reinstate research privileges. The response will be made in writing and sent to the researcher.

[64 FR 19901, Apr. 23, 1999]

§ 1254.24 Locker use policy.

(a) The National Archives and Records Administration (NARA) prohibits researchers from carrying boxes, briefcases, satchels, valises, purses, or other large containers into the research rooms or authorized stack areas. To accommodate researchers who have these items, lockers or other storage facilities are conveniently located near research rooms. These lockers or other storage facilities are available on a first-come-first-served basis.

(b) Researchers' personal belongings must be removed each night from the lockers or other storage facilities provided to hold them unless special permission is obtained in advance from designated research room staff. If personal belongings are not removed from the facilities by the researcher, they will be removed by NARA personnel. Directions for reclaiming confiscated items will be posted near the lockers or other storage facilities.

(c) The National Archives and Records Administration is not responsible for the loss or theft of articles stored in the lockers.

(d) NARA may charge a replacement fee for lost locker keys.

[45 FR 8603, Feb. 8, 1980. Redesignated at 50 FR 15723, Apr. 19, 1985, as amended at 64 FR 19902, Apr. 23, 1999]

§ 1254.25 Rules for public access use of the Internet on NARA-supplied personal computers.

(a) Public access personal computers (workstations) are available for Internet use in all NARA research rooms. The number of workstations varies per location. These workstations are intended for research purposes and are provided on a first-come-first-served basis. When others are waiting to use the workstation, a 30-minute time limit may be imposed on the use of the equipment.

(b) Researchers should not expect privacy while using these workstations. These workstations are operated and maintained on a United States Government system, and activity may be monitored to protect the system from unauthorized use. By using this system, researchers expressly consent to such monitoring and the reporting of unauthorized use to the proper authorities.

(c) At least one Internet access workstation will be provided in each facility that complies with the Workforce Investment Act of 1998, ensuring comparable accessibility to individuals with disabilities.

(d) Researchers may download information to a diskette and print materials, but the research room staff will furnish the diskettes and paper. Researchers may not use personally owned diskettes on NARA personal computers.

(e) Researchers may not load files or any type of software on these workstations.

[67 FR 8200, Feb. 22, 2002]

§ 1254.26 Additional rules for use of certain research rooms in NARA facilities in the Washington, DC, area.

(a) Admission to research rooms in the National Archives Building and the National Archives at College Park facility is limited to individuals examining and/or copying documents and other materials in the custody of the National Archives and Records Administration. Children under the age of 14 will not be admitted to these research rooms unless they have been granted research privileges or are granted an exception to this provision to view specific documents that a parent or other accompanying adult researcher is using. The exception will be granted by the Chief of the Archives I or Archives II Research Room Services Branch for a child who is able to read and who will be closely supervised by the adult researcher while in the research room. Normally, such a child will be admitted only for the short period required to view the documents. Unless otherwise permitted, persons without a researcher card may not actively participate in research activities, e.g., removing, copying, or refiling documents. Students under the age of 14 who wish to perform research on original documents must apply in person to the Chief of the Research Room Services Branch where the documents are located and present a letter of reference from a teacher. Such students may contact NARA by phone or letter in advance of their visit to discuss their eligibility for research privileges. Students under the age of 14 who have been granted research privileges will be required to be accompanied in the research room by an adult with similar privileges, unless the Chief of the Archives I or Archives II Research Room Services Branch specifically waives this requirement with respect to individual researchers.

(b) The procedures in paragraphs (d) through (g) of this section apply to all research rooms in the National Archives Building (except the Microfilm Research Room) and in the National Archives at College Park facility. These procedures are in addition to the procedures specified elsewhere in this part.

(c) Researchers bringing personal computers, tape recorders, cameras, and other equipment into the National Archives Building must complete the Equipment Log at the guard's desk. The log will evidence personal ownership and will be checked by the guard

when such equipment is removed from the building.

(d) Researchers must present a valid researcher identification card to the guard or research room attendant on entering the research room. All researchers are required to register their attendance each day. Researchers will also register the time they leave the research area at the end of the visit for that day. Researchers are not required to sign in or out when leaving the area temporarily.

(e) Researchers may not bring into the research rooms overcoats, raincoats, hats, or similar apparel; personal paper-to-paper copiers, unless permitted in accordance with §1254.71(e) of this part; briefcases, suitcases, day packs, purses, or similar containers of personal property; notebooks, notepaper, note cards, folders or other containers for paper. These items may be stored at no cost in lockers available for researchers. The following exceptions may be granted:

(1) Hand-held wallets and coin purses for the carrying of currency, coins, credit cards, keys, drivers licenses and other identification cards may be brought into research rooms, but are subject to inspection when the researcher enters or leaves the room. The guard or research room attendant shall judge whether the wallet or purse may be considered small for purposes of this section;

(2) Notes, references, lists of documents to be consulted, and other materials may be admitted if the chief of the branch administering the research room or the senior staff member on duty in the research room determines they are essential to a researcher's work requirements. Materials approved for admission will be stamped, initialed, and dated by a NARA or contractor employee, to indicate that they are the personal property of the researcher;

(3) Personal computers, tape recorders, scanners, cameras, and similar equipment may be admitted by the research room attendant provided such equipment meet the approved standards for preservation set by the NARA Preservation Programs unit. Use of researcher owned equipment may be limited to designated areas within the research rooms. If demand to use equipment exceeds the space available for equipment use, time limits may be imposed. Equipment that could potentially damage documents will not be approved. Scanners and other copying equipment must meet these minimum standards:

(i) Equipment platens or copy boards must be the same size or larger than the records. No part of a record may overhang the platen or copy board.

(ii) No part of the equipment may come in contact with records in a manner that causes friction, abrasion, or that otherwise crushes or damages records.

(iii) Drum scanners are prohibited.

(iv) Automatic feeder devices on flatbed scanners are prohibited. When using a slide scanner, slides must be checked after scanning to ensure that no damage occurs while the slide is inside the scanner.

(v) Light sources must not raise the surface temperature of the record being copied. Light sources that generate ultraviolet light must be filtered.

(vi) All equipment surfaces must be clean and dry before being used with records. Cleaning and equipment maintenance activities, such as replacing toner cartridges, may not take place when records are present. Aerosols or ammonia-containing cleaning solutions are not permitted. A 50% water and 50% isopropyl alcohol solution is permitted for cleaning.

The chief of the branch administering the research room or the senior staff member on duty in the research room will review the determination made by the research room attendant if requested to do so by the researcher; and

(4) Notepaper and notecards provided by the National Archives and electrostatic copies made on copying machines in NARA research rooms which are marked with the statement ''Reproduced at the National Archives'' may be brought back into the research room on subsequent visits but must be presented on entry to the research room attendant for inspection.

(f) NARA will furnish to researchers, without charge, pencils and specially marked lined and unlined notepaper and notecards, for use in the research rooms. Pencils and unused notepaper

and notecards should be returned to the research room attendant at the end of the day.

(g) The personal property of all researchers, including notes, electrostatic copies, equipment cases, tape recorders, cameras, personal computers, and other property, will be inspected before removal from the research room. Guards and research room attendants may request that a member of the research room staff examine such personal items prior to their removal from the research room.

(h) In addition to the procedures in paragraphs (c) through (g) of this section, the following procedures apply to the Motion Picture, Sound, and Video Research Room (hereinafter, the ''research room'') in the College Park facility:

(1) Use of NARA viewing and listening equipment in the research room is provided on a first-come-first-served basis. When others are waiting to use the equipment, a three-hour limit may be imposed on the use of the equipment.

(2) The following procedures shall be followed when personal recording equipment and accessories are brought into the unrestricted viewing and copying area in the research room:

(i) Personal recording equipment brought into the unrestricted viewing and copying area in the research room may be inspected and tagged by the research room attendant prior to admittance. All equipment and accessory devices must be placed on the carts provided by NARA, except that a tripod holding a video camera may be placed on the floor in front of a film-viewing station. NARA is not responsible for damage to or loss of personal equipment and accessories.

(ii) Researchers shall remain in the research room while their personal equipment is in use at an audio or video viewing station. The film viewing stations must be attended at all times while in use. Researchers shall remove their personal equipment from the research room when they leave the room for the day.

(iii) NARA will not be responsible for assisting with ''hook-up'' to NARA viewing equipment; for providing compatibility between the personal recording equipment and NARA viewing equipment; or for the quality of the copies made by researchers. NARA will provide the researcher information on the types of NARA equipment being used in the research room and on the cables necessary for hook up to the NARA viewing equipment.

(3) When a researcher brings audio or video recording tapes or cassettes into the unrestricted area of the research room, the research room attendant will mark the recording media ''NARA-approved personal property'' for identification purposes. Such media shall be inspected upon exit from the research room, as well as upon exit from the National Archives Building.

(4) A NARA-furnished video copying station and 120-minute blank video cassette may be reserved, for a fee, on a first-come, first-served basis for a 90-minute period of time. If no other individual is waiting to use the station, an additional time period may be reserved at the end of the current period. Personal recording devices may not be connected to NARA equipment at the video copying station. Only NARA-provided tapes may be used at the video copying station. Fees for use of the station and blank cassette are specified in § 1258.12 of this chapter.

(5) The NARA-furnished recorder or personal recording device and media may be used to make a copy of unrestricted archival materials in the research room.

(6) Each researcher will be provided a copy of the Motion Picture, Sound, and Video Research Room rules and a warning notice on potential copyright claims in unrestricted titles. The individual making and/or using the copy is responsible for obtaining any needed permission or release from a copyright owner for other than personal use of the copy.

(7) No personal recording device or media is permitted in the restricted viewing area in the research room.

[51 FR 17187, May 9, 1986, as amended at 56 FR 2135, Jan. 22, 1991; 56 FR 58312, Nov. 19, 1991; 57 FR 46306, Oct. 8, 1992; 59 FR 29193, June 6, 1994; 64 FR 19903, Apr. 23, 1999]

§ 1254.27 Additional rules for use of certain research rooms in regional records services facilities and Presidential libraries.

(a) When directed by the appropriate regional administrator or library director, the following procedures shall be observed in regional records services facility and Presidential library archival research rooms where original documents are used. These procedures are in addition to the procedures specified elsewhere in this part.

(b) Researchers must present a valid researcher identification card to the guard or research room attendant on entering the room. All researchers are required to sign each day the research room registration sheet at the entrance to the research room. Where instructed to do so, researchers also sign out when leaving the research room for the day. Researchers are not required to sign in or out when leaving the area temporarily or at the end of the day.

(c) Researchers may not bring into the research room overcoats, raincoats, hats, and similar apparel, and briefcases, suitcases, daypacks, purses, or similar containers of personal property. In facilities where NARA provides notepaper and notecards, researchers also may not bring into the research room notebooks, notepaper, notecards, folders or other containers for papers. In facilities where NARA provides a self-service copier, researchers may not bring into the research room personal copying equipment including personal paper-to-paper copiers. These items may be stored at no cost in lockers or other storage facilities in the NARA facility. The following exceptions may be granted:

(1) Hand-held wallets and coin purses for carrying currency, coins, credit cards, keys, drivers licenses and other identification cards may be brought into research rooms, but are subject to inspection when the researcher enters or leaves the room. The guard or research room attendant shall judge whether the wallet or purse may be considered small for purposes of this section;

(2) Notes, references, lists of documents to be consulted, and other materials may be admitted if the director, or the senior attendant on duty in the research room determines they are essential to a researcher's work requirements. Materials will be presented to the attendant when the researcher enters the research room. If the materials are approved for admission, they may be stamped to indicate that they are the researcher's property;

(3) Typewriters, personal computers, tape recorders, and hand-held cameras may be admitted by the guard or research room attendant provided that they are inspected, approved, and tagged prior to admittance. For a regional records services facility, the regional administrator, the director or other supervisor having responsibility for research room operations in a facility, or the senior attendant on duty will review the determination made by the guard or research room attendant if requested to do so by the researcher. In a Presidential library, the director, or the senior attendant on duty in the research room will review the determination made by the guard or research room attendant if requested to do so by the researcher. In facilities where personal paper-to-paper copiers and scanners are permitted, the researcher must obtain prior written approval from the facility director to bring in the copier or scanner. The request to bring a personal copier or scanner should state the space and power consumption requirements and the intended period of use; and

(4) Notepaper and notecards provided by the National Archives and electrostatic copies made on copying machines in NARA research rooms which are marked with the statement ''Reproduced at the National Archives'' may be brought back into the research room on subsequent visits but must be presented on entry to the guard or research room attendant for inspection.

(d) NARA may furnish specially marked lined and unlined notepaper and notecards, without charge, to researchers for use in the research rooms. Unused notepaper and notecards should be returned to the research room attendant at the end of the day.

(e) The personal property of all researchers, including notes, electrostatic copies, typewriter cases, tape recorders, cameras, personal computers,

and other personal property, will be inspected before removal from the research room. Guards and research room attendants may request that a member of the research room staff examine such personal items prior to their removal from the research room.

(f) Researchers may use NARA self-service copiers or authorized personal paper-to-paper copiers to copy documents in accordance with NARA document handling instructions and after review of the documents by the research room attendant to determine their suitability for copying. The director or the senior archivist on duty in the research room will review the determination of suitability if requested by the researcher. The following types of documents are not suitable for copying on a self-service or personal copier:

(1) Bound archival volumes;

(2) Documents fastened together by staples, clips, acco fasteners, rivets, or similar fasteners, where folding or bending the document may cause damage;

(3) Documents larger than the glass copy plate of the copier;

(4) Documents with uncancelled security classification markings;

(5) Documents with legal restrictions on copying; and

(6) Documents which, in the judgement of the research room attendant, are in poor physical condition or which may be subject to possible damage if copied.

[51 FR 31617, Sept. 4, 1986, as amended at 59 FR 29192, 29194, June 6, 1994; 64 FR 19903, Apr. 23, 1999]

Subpart C—Access to Unclassified Records and Donated Historical Materials

§ 1254.30 Archives.

The use of archives is subject to the restrictions prescribed by statute or Executive order or by the restrictions specified in writting in accordance with 44 U.S.C. 2108 by the agency from which the records were transferred. NARA will make available any reasonably segregable portion of a record after the restricted portion has been deleted. The restrictions are published in the ''Guide to the National Archives of the United States,'' and supplemented by restriction statements approved by the Archivist of the United States and set forth in part 1256 of this chapter. The Guide is available from the Superintendent of Documents, Government Printing Office, Washington, DC 20402. The Guide may also be consulted at the NARA research facilities listed in part 1253 of this chapter.

[54 FR 32069, Aug. 4, 1989]

§ 1254.32 FRC records.

Requests for access to records on deposit in Federal records centers shall be addressed directly to the appropriate agency or to the FRC director at the address shown in part 1253. The use of FRC records is subject to access rules prescribed by the agency from which the records were transferred. When the agency's rules permit, NARA makes FRC records available to requesters. When access is precluded by these rules and restrictions, the FRC director will refer to the responsible agency the requests and any appeals for access, including those made under the Freedom of Information Act.

[40 FR 7925, Feb. 24, 1975. Redesignated at 50 FR 15723, Apr. 19, 1985]

§ 1254.34 Records of defunct agencies.

Access to archives and FRC records received from agencies which have ceased to exist without a successor in function are handled in accordance with §§ 1254.30 and 1254.50.

[44 FR 18496, Mar. 28, 1979. Redesignated at 50 FR 15723, Apr. 19, 1985]

§ 1254.35 Presidential records and Nixon Presidential materials.

Access to Presidential records transferred to NARA is governed by 36 CFR part 1270. Access to the Nixon Presidential materials is governed by 36 CFR part 1275.

[59 FR 29194, June 6, 1994]

§ 1254.36 Donated historical materials.

The public use of donated historical materials is subject to restrictions on their use and availability as stated in writing by the donors or depositors of such materials and other restrictions imposed by statute. (Researchers are

encouraged to confer with the appropriate director or reference staff member on any question of copyright.) In addition, use is subject to all conditions specified by the Archivist of the United States for purposes of archival preservation.

[59 FR 29194, June 6, 1994]

Subpart D—Access to National Security Information

§ 1254.40 Access to national security information.

(a) Declassification of and public access to national security information and material, hereinafter referred to as ''classified information'' or collectively termed ''information'' is governed by Executive Order 12356 of April 2, 1982 (3 CFR, 1982 Comp., p. 166), the implementing Information Security Oversight Office Directive Number 1 of June 22, 1982 (47 FR 27836, June 25, 1982) and the Freedom of Information Act (5 U.S.C. 552).

(b) Public access to documents declassified in accordance with this regulation may be restricted or denied for other reasons under the provisions of 5 U.S.C. 552(b) for accessioned agency records; 36 CFR 1254.36 for donated historical materials; 44 U.S.C. 2201 *et seq.* and 36 CFR part 1270 for Presidential records; and 44 U.S.C. 2111 note and 36 CFR part 1275 for Nixon Presidential materials.

[59 FR 29194, June 6, 1994]

§ 1254.44 Freedom of Information Act (FOIA) requests.

(a) *Requests for access to national security information under the Freedom of Information Act.* Requests for access to national security information under the FOIA are processed in accordance with the provisions of 36 CFR part 1250. Time limits for responses to FOIA requests for national security information are those provided in the FOIA, rather than the longer time limits provided for responses to mandatory review requests specified by Executive Order 12958, Classified National Security Information (3 CFR, 1995 Comp., p. 333).

(b) *Agency action.* Upon receipt of a request forwarded by NARA for a determination regarding declassification, the agency with declassification responsibility shall:

(1) Advise whether the information should be declassified in whole or in part or should continue to be exempt from declassification;

(2) Provide a brief statement of the reason any requested information should not be declassified; and

(3) Return all reproductions referred for determination, including a copy of each document which should be released only in part, marked to indicate the portions which remain classified.

(c) *Denials and appeals.* Denials under FOIA of access to national security information accessioned into the National Archives of the United States are made by designated officials of the originating or responsible agency or by NARA under a written delegation of authority. You must appeal determinations that records remain classified for reasons of national security to the agency with responsibility for protecting and declassifying that information. NARA will provide you with the necessary appeal information in those cases.

[49 FR 1349, Jan. 11, 1984. Redesignated at 50 FR 15723, Apr. 19, 1985; further redesignated and amended at 51 FR 22076, June 18, 1986; 54 FR 32070, Aug. 4, 1989; 66 FR 16382, Mar. 23, 2001]

§ 1254.46 Public requests for mandatory review of classified information under Executive Order 12356.

United States citizens or permanent resident aliens, Federal agencies, or State or local governments wishing to request mandatory review of classified information that has been accessioned into the National Archives or donated to the Government may do so by describing the document or material containing the information with sufficient specificity to enable NARA to locate it with a reasonable amount of effort. When practicable, a request shall include the name of the originator and recipient of the information, as well as its date, subject, and file designation. If the information sought cannot be identified from the description provided or if the information sought is so voluminous that processing it would interfere with NARA's capacity to

serve all requestors on an equitable basis, NARA shall notify the requestor that, unless additional information is provided or the scope of the request is narrowed, no further action will be taken. NARA shall review for declassification and release the requested information or those declassified portions of the request that constitute a coherent segment unless withholding is otherwise warranted under applicable law. Requests for mandatory review should be addressed to the appropriate NARA depository listed in part 1253.

[49 FR 1350, Jan. 11, 1984. Redesignated at 50 FR 15723, Apr. 19, 1985]

§ 1254.48 Access by historical researchers and former Presidential appointees.

(a) Access to classified information may be granted to U.S. citizens who are engaged in historical research projects or who previously occupied policy-making positions to which they were appointed by the President. Persons desiring permission to examine material under this special historical researcher/Presidential appointees access program should contact NARA at least 4 months before they desire access to the materials to permit time for the responsible agencies to process the requests for access. NARA will inform requesters of the agencies to which they will have to apply for permission to examine classified information, including classified information originated by the White House or classified information in the custody of the National Archives which was originated by a defunct agency.

(b) Requestors may examine records under this program only after the originating or responsible agency:

(1) Determines in writing that access is consistent with the interest of national security;

(2) Takes appropriate steps to protect classified information from unauthorized disclosure or compromise, and ensures that the information is safeguarded in a manner consistent with Executive Order 12356; and

(3) Limits the access granted to former presidential appointees to items that the person originated, reviewed, signed, or received while serving as a presidential appointee.

(c) To protect against the possibility of unauthorized access to restricted documents, a director may issue instructions supplementing the research room rules provided in subpart B.

[49 FR 1352, Jan. 11, 1984. Redesignated at 50 FR 15723, Apr. 19, 1985 and 51 FR 22076, June 18, 1986; 59 FR 29194, June 6, 1994]

§ 1254.50 Fees.

NARA will charge requesters for copies of declassified documents according to the fees listed in § 1258.12 of this chapter.

[59 FR 29194, June 6, 1994]

Subpart E—Information, Reproduction, and Authentication Services

§ 1254.70 NARA copying services.

(a) The copying of documents will be done by a contractor or NARA staff with equipment belonging to NARA. NARA reserves the right to make a duplicate, at NARA expense, of any material copied. Such duplicates may be used by NARA to make additional copies for others.

(b) In order to preserve the original documents, documents which are available on microfilm or other alternate copy will not be copied by other means as long as a legible copy (electrostatic, photographic, or microfilm) can be made from the microfilm.

[52 FR 20080, May 29, 1987; 59 FR 29194, June 6, 1994, as amended at 64 FR 19903, Apr. 23, 1999]

§ 1254.71 Researcher use of the self-service card-operated copiers in the National Archives Building and the National Archives at College Park.

(a) *General.* Self-service card-operated copiers are located in research rooms in the National Archives Building and the National Archives at College Park. Other copiers set aside for use by reservation are located in designated research areas. Procedures for use are outlined in paragraphs (b) through (h) of this section.

(b) *Limitations and hours of use.* (1) There is a 3-minute time limit on copiers in research rooms when others are waiting to use the copier. Researchers using microfilm reader-printers may be

limited to three copies when others are waiting to use the machine. Researchers wishing to copy large quantities of documents should see a staff member in the research room to reserve a copier for an extended time period.

(2) If an appointment must be canceled due to copier failure, NARA will make every effort to schedule a new mutually agreed-upon time. However, NARA will not displace researchers whose appointments are not affected by the copier failure.

(c) *Copying procedures*. (1) Individual documents to be copied shall be tabbed in accordance with the procedures governing the tabbing of documents and; brought to the research room attendant for inspection in the file unit. The research room attendant will examine the documents to determine whether they can be copied on the self-service copier. The chief of the branch administering the research room will review the determination of suitability if asked to do so by the researcher. After reproduction is completed, documents removed from files for copying must be returned to their original position in the file container, any fasteners removed to facilitate copying must be refastened, and any tabs placed on the documents to identify items to be copied must be removed.

(2) Researchers using the reserved copier must submit the containers of documents to the attendant for review prior to the appointment. The review time required is specified in each research room. Research room attendants may inspect documents after copying.

(3) Researchers may copy from only one box and one folder at a time. After copying the documents, the researcher must show the original documents and the copies to a research room attendant.

(d) *Documents not suitable for self-service copying*. The following types of documents may not be copied on the self-service copiers:

(1) Bound archival volumes (except when specialized copiers are provided);

(2) Documents fastened together by staples, clips, acco fasteners, rivets, or similar fasteners, where folding or bending documents may cause damage;

(3) Documents larger than the glass copy plate of the copier;

(4) Documents with uncanceled security classification markings;

(5) Documents with legal restrictions on copying; and

(6) Documents which, in the judgement of the research room attendant, are in poor physical condition or which may be subject to possible damage if copied.

(e) *Use of personal paper-to-paper copiers at the National Archives at College Park facility*. (1) NARA will approve a limited number of researchers to bring in and use personal paper-to-paper copying equipment in the Textual Research Room (Room 2000). Requests must be made in writing to the Chief, Archives II Research Room Services Branch (NWCCR2), National Archives and Records Administration, 8601 Adelphi Rd., College Park, MD 20740–6001. Requests must identify the records to be copied, the expected duration of the project, and the make and model of the equipment.

(2) NARA will evaluate requests using the following criteria:

(i) A minimum of 3,000 pages must be copied;

(ii) The project is expected to take at least 4 weeks, with the copier in use a minimum of 6 hours per day or 30 hours per week;

(iii) The copying equipment must meet the standards for preservation set by NARA's Preservation Programs unit (see § 1254.26(e)(3) of this part); and

(iv) Space is available for the personal copying project. NARA will allow no more than 3 personal copying projects in the research room at one time, with Federal agencies given priority over other users.

(3) Researchers must coordinate with research room management and oversee the installation and removal of copying equipment and are responsible for the cost and supervision of all service calls and repairs. Copying equipment and supplies must be removed within two business days after the personal copying project is completed.

(4) NARA will not be responsible for any personal equipment or consumable supplies.

(5) Each operator must obtain a valid researcher identification card and be

trained by NARA staff on the proper methods for handling and copying archival documents.

(6) Operators must abide by all regulations on copying stated in paragraphs (c), (d) and (f) of this section.

(7) NARA reserves the right to discontinue the privilege of using a personal copier at any time without notice. Conditions under which NARA would discontinue the privilege include: violation of one of the conditions in paragraphs (c), (d), (e), or (f) of this section; a need to provide space for a Federal agency; or a lack of NARA staff to supervise the area.

(f) *Cancellation of security classification markings.*

(1) Security classification markings (RESTRICTED, CONFIDENTIAL, SECRET, TOP SECRET, and others) on declassified records must be properly canceled before documents are copied. Only a NARA staff member can cancel security markings. Properly declassified documents will bear the declassification authority.

(2) Researchers may not remove from the research room copies of documents bearing uncanceled classification markings. Copies of documents with uncanceled markings will be confiscated.

(3) When individual documents are being copied, the research room staff will cancel the classification markings on each page and will place the declassification authority on the first page of each document. If the researcher is copying only selected pages from a document, the researcher must make a copy of the first page bearing the declassification authority and attach that page to any subsequent page(s) copied from the document. This declassification authority must be presented to the guard when copies of documents are removed from the research room and/or the building.

(4) Researchers using the reserved copiers are provided with a declassification strip which is attached to the copier. The strip, which is reproduced on each page copied, cancels the security markings.

(g) *Purchasing debit cards for copiers.* Researchers may use cash to purchase a debit card from a vending machine during the hours that self-service copiers are in operation. Additionally, debit cards may be purchased with cash, check, money order, credit card, or funds from an active deposit account from the Cashier's Office located in room G–1 of the National Archives Building, and the researcher lobby of the College Park facility, during posted hours. The debit card will, when inserted into the copier, enable the user to make copies, for the appropriate fee, up to the value on the debit card. Researchers may add value to the debit card by using the vending machine. No refunds will be made. The fee for self-service copiers is found in § 1258.12 of this chapter.

[56 FR 2136, Jan. 22, 1991; 56 FR 5731, Feb. 12, 1991, as amended at 59 FR 29194, June 6, 1994; 64 FR 19903, Apr. 23, 1999]

§ 1254.72 Information about documents.

(a) Upon request, overall information pertaining to holdings or about specific documents will be furnished, provided that the time required to furnish the information is not excessive, and provided that the information is not restricted (see subpart C and subpart D).

(b) When so specified by a director, requests must be made on prescribed forms. Such forms will be approved by OMB as information collections and will bear the approved control number.

[59 FR 29195, June 6, 1994]

§ 1254.74 Information from documents.

Normally, information contained in the documents will be furnished in the form of photocopies of the documents, subject to the provisions of § 1254.70. NARA will certify facts and make administrative determinations on the basis of archives, or of FRC records when appropriate officials of other agencies have authorized NARA to do so. Such certifications and determinations will be authenticated by the seal of NARA, the National Archives of the United States, or the transferring agency, as appropriate.

[59 FR 29195, June 6, 1994]

§ 1254.76 Certification of copies.

The responsible director, or any of his or her superiors, the Director of the Federal Register, and their designees

are authorized to certify copies of documents as true copies.

[59 FR 29195, June 6, 1994]

Subpart F—Microfilming Archival Records

SOURCE: 52 FR 20081, May 29, 1987, unless otherwise noted.

§ 1254.90 General.

(a) This subpart establishes rules and procedures governing the use of privately owned microfilm equipment to film accessioned archival records and donated historical materials in the legal and physical custody of the National Archives and Records Administration (NARA) by foreign and domestic government agencies, private commercial firms, academic research groups, and other entities or individuals who request exemption from obtaining copies through the regular fee schedule reproduction ordering system of NARA.

(b) Persons or organizations wishing to microfilm Federal agency records in the physical custody of the Washington National Records Center (WNRC) contact the director, WNRC, about procedures for obtaining permission from the originating agency to film those records. For information about procedures for obtaining permission from the originating agency to film records in the records center operation of one of NARA's regional records services facilities or in the physical custody of the National Personnel Records Center (NPRC), contact the Regional Administrator of the region in which the records are located, or the director, NPRC, for records in NPRC.

(c) Federal agencies needing to microfilm archival records in support of the agency's mission must contact the appropriate office as specified in § 1254.92 of this part, as soon as possible after the need is identified, for information concerning standards and procedures for microfilming archival records.

[64 FR 19904, Apr. 23, 1999]

§ 1254.92 Requests to microfilm records and donated historical materials.

(a) Requests to microfilm archival records or donated historical materials (except donated historical materials under the control of the Office of Presidential Libraries) in the Washington, DC area must be made in writing to the Assistant Archivist for Records Services—Washington, DC (NW), 8601 Adelphi Rd., College Park, MD 20740–6001. Requests to microfilm archival records or donated historical materials held in a NARA regional records service facility must be made in writing to the Assistant Archivist for Regional Records Services (NR), 8601 Adelphi Rd., College Park, MD 20740–6001. Requests to microfilm records or donated historical materials in a Presidential library or donated historical materials in the Washington area under the control of the Office of Presidential Libraries must be made in writing to the Assistant Archivist for Presidential Libraries (NL), 8601 Adelphi Rd., College Park, MD 20740–6001. OMB control number 3095–0017 has been assigned to the information collection contained in this section.

(b) Requests to use privately owned microfilm equipment should be submitted four months in advance of the proposed starting date of the microfilming project. Requests submitted with less advance notice will be considered and may be approved if adequate NARA space and staff are available and if all training, records preparation and other NARA requirements can be completed in a shorter time frame. Only one project to microfilm a complete body of documents, such as an entire series, a major continuous segment of a very large series which is reasonably divisible, or a limited number of separate series related by provenance or subject, may be included in a request. NARA will not accept additional requests from an individual or organization to microfilm records in a NARA facility while NARA is evaluating an earlier request from that individual or organization to microfilm records at that facility. NARA will establish the number of camera spaces available to a single project based upon the total

number of projects approved for filming at that time.

(c) The request must include:

(1) A description of the documents to be copied which includes the following elements:

(i) Agency of origin or, for donated historical materials, title of the collection,

(ii) Title of series or file segment;

(iii) Date span; and

(iv) Estimated volume in number of pages or cubic feet.

(2) The estimated amount of time (work-days) that the microfilm copying project will take; the date that the requester would like to begin the project; and the number of persons who would require training (see § 1254.100(b)).

(3) The number and a description of the equipment that will be used for copying including:

(i) The name of the manufacturer and model number; and

(ii) The type of light source to be employed (fluorescent, tungsten, or electronic flash) and if electronic flash (i.e., strobe) or fluorescent, whether the light source is filtered to omit ultraviolet radiation.

(4) A statement of the procedures which will be followed to ensure that all pages are copied, that the images on the microfilm are legible, and that the microfilm is properly processed. At a minimum, the procedures should meet the requirements specified in part 1230 of this chapter regarding the microfilming of permanent records.

(d) The requester must agree to credit the National Archives or the particular Presidential Library having custody of the original documents. The credit must appear at the beginning of a microfilm publication and in any publicity material or descriptions of the publication.

(1) If the original documents are Federal records, the requester must agree to include on the film this statement: ''The documents reproduced in this publication are among the records of the (name of agency) in the custody of the National Archives of the United States. No copyright is claimed in these official U.S. Government records.''

(2) If the original documents are donated historical materials, the requester must agree to include on the film this statement: ''The documents reproduced in this publication are donated historical materials from (name of donor) in the custody of the (name of Presidential library or National Archives). The National Archives administers them in accordance with the requirements of the donor's deed of gift and the U.S. Copyright Law, Title 17, U.S.C.''.

(3) If the original documents are presidential or vice-presidential records as specified in 44 U.S.C. 2201, the requester must agree to include on the film this statement: ''The documents reproduced in this publication are presidential records in the custody of the (name of Presidential library or National Archives of the United States). NARA administers them in accordance with the requirements of Title 44, U.S.C. No copyright is claimed in these official presidential records.''

(4) If the original documents are records of Congress, the requester must agree to include on the film this statement: ''The documents reproduced in this publication are among the records of the (House of Representatives/Senate) in the physical custody of National Archives and Records Administration (NARA). NARA administers them in accordance with the requirements of the (House/Senate).

(e) If the person or organization producing the film plans to copyright the microfilm publication, the National Archives and Records Administration must be given a royalty-free worldwide license to sell the publication seven years after filming at the NARA facility is completed, or earlier if there is no commercial distributor.

[52 FR 20081, May 29, 1987; 52 FR 22415, June 11, 1987, as amended at 59 FR 29195, June 6, 1994; 64 FR 19904, Apr. 23, 1999]

§ 1254.94 Criteria for granting the requests.

(a) NARA will evaluate the requests on the basis of the extent to which completion of a proposed project would further NARA's efforts to preserve and to make available to the public the historically valuable records of the Government.

(1) In considering multiple requests to film at the same time, NARA will give priority to microfilming records that have research value for a variety of studies or that contain basic information for fields of research in which researchers have demonstrated substantial interest.

(2) The records to be filmed should be reasonably complete and not subject to future additions, especially of appreciable volumes, within the original body of records. Records with pending or future end-of-series additions are appropriate for filming.

(3) The records to be filmed should not have substantial numbers of documents withdrawn because of continuing security classification or privacy or other restriction.

(b) NARA will approve only requests to microfilm a complete body of documents, such as an entire series or a major continous segment of a very large series which is reasonably divisible. Microfilming a complete body of documents means that all documents within the file unit(s) to be microfilmed will be consecutively copied, from the first to the last page, not skipping any pages in between except for pages that are exact duplicates or blank pages that are not included in a pagination scheme.

(c) NARA will normally approve only requests which include assurances that the project will adhere to the specifications in part 1230 of this chapter which concern microfilm stock standards, index placement, and microfilm processing for permanent records.

(d) NARA will approve only requests which specify that NARA will receive a first generation silver halide duplicate negative containing no splices made from the original camera negative of the microform record created in accordance with part 1230 of this chapter. NARA may waive any of the requirements of this paragraph at its discretion.

(1) NARA may use this duplicate negative microform to make duplicate preservation and reference copies. The copies may be made available for NARA and public use in NARA facilities and programs immediately upon receipt, subject to the limitation in paragraph (d)(2) of this section.

(2) NARA may also sell copies of the microform seven years after filming at the NARA facility is completed, or earlier if there is no commerical distributor. NARA may choose to add its own editorial material to the microform copies which NARA distributes or sells.

(3) Detailed roll lists must be delivered with the microfilm. The lists must give the full range of file titles and a complete list of all file numbers on each roll of microfilm. NARA prefers that the list be provided in a fielded, electronic format to facilitate its use by staff and researchers. If the electronic format is a data file with defined or delimited fields, the records layout identifying the fields, any coded values for fields, and explanations of any delimiters should be transferred with the list.

(4) Microfilm projects may donate to NARA additional indexes and/or finding aids. NARA and the microfilm project will execute a deed of gift that will specify restrictions on NARA's use and dissemination of these products under mutually acceptable terms.

(e) NARA will not approve any request that does not include all of the information required by § 1254.92.

(f) NARA will normally not approve requests to microfilm documents:

(1) Which have previously been microfilmed and made available to the public;

(2) Which have been approved for microfilming by another party; or

(3) Which NARA plans to film as a NARA microfilm publication or which relate closely to other documents previously microfilmed or approved for microfilming by NARA. Exceptions to this provision may be granted at the discretion of NARA.

(g) NARA will normally not approve requests to microfilm the following categories of documents:

(1) Documents which include documents with general or specific restrictions on access that preclude their reproduction;

(2) Documents which include documents which are known to be protected by copyright;

(3) Documents of high intrinsic value which may be handled only by authorized NARA personnel;

(4) Documents in vulnerable physical condition;

(5) Documents having a high research demand and which would have to be denied to others for an extended period of time during the microfilming process. Where possible, NARA will assist requesters in developing filming schedules that avoid the need to close documents for a lengthy period of time; and

(6) Oversize documents, bound volumes, and other formats that would be subject to excessive stress and possible damage from special equipment planned to be used by the requester, as well as documents fastened with grommets, heavy duty staples, miscellaneous fasteners, or wafers and other adhesives that cannot be removed without tearing or breaking documents.

(h) NARA will normally not approve requests from persons or organizations who have failed to produce usable microfilm or to honor commitments made in previous requests, or who have had a previous permission to microfilm documents rescinded because of their conduct.

(i) NARA will not approve requests to microfilm records in NARA facilities in which there is insufficient space available for private microfilming. NARA also will not approve requests where the only space available for filming is in the facility's research room, and such work would disturb researchers. NARA will not move records from a facility lacking space for private microfilming to another NARA facility for that purpose. When a NARA facility does not have enough space to accommodate all the requests made, NARA may schedule separate projects by limiting the time allowed for each particular project or by requiring projects to alternate in the use of the space.

(j) Federal agencies microfilming records in support of the agency's mission may use the space set aside for private microfilming. Agency microfilming takes precedence over private microfilming when there is insufficient space to accommodate both at the same time.

(k) NARA will not approve requests to microfilm records when there is not enough staff to provide the necessary support services, including document preparation, training of private microfilmers, and monitoring the filming.

(l) NARA will not approve the start of a project to microfilm records until the requestor has agreed in writing to the amount and schedule of fees for any training, microfilm preparation, and monitoring by NARA staff that is necessary to support that specific project. NARA's letter of tentative approval for the project will include an agreement detailing the records in the project and the detailed schedule of fees for NARA services for the project. NARA will give final approval when NARA receives the requestor's signed copy of the agreement.

[52 FR 20081, May 29, 1987, as amended at 64 FR 19905, Apr. 23, 1999]

§ 1254.96 Microfilm preparation.

(a) As part of its evaluation of a request to microfilm documents, NARA will determine the amount of microfilm preparation that NARA must do before the documents can be microfilmed and the estimated cost of such preparation. The fees for microfilm preparation will be based on direct salary costs (including benefits) and supply costs when NARA staff performs the work. When the work is performed by a NARA contractor, the fees will be the cost to NARA. Microfilm preparation includes:

(1) Removing document fasteners from documents when the fasteners can be removed without damage to the documents; and

(2) Taking any document conservation actions that must be accomplished in order to film the documents, such as document flattening or mending.

(b) NARA will provide the requester detailed information on the fees for microfilm preparation in the letter of approval. Payment of fees will be made in accordance with § 1258.14 of this chapter. When a body of documents will require extensive microfilm preparation, a different payment schedule may be established at the discretion of NARA.

[52 FR 20081, May 29, 1987; 52 FR 22415, June 11, 1987, as amended at 59 FR 29195, June 6, 1994; 64 FR 19905, Apr. 23, 1999]

§ 1254.98 Equipment standards.

(a) Because space in many NARA facilities is limited, microfilm/fiche equipment should be operable from a table top unless NARA has given written permission to use free standing/floor model cameras. Only planetary type camera equipment may be used. Automatic rotary cameras and other equipment with automatic feed devices may not be used. Book cradles or other specialized equipment designed for use with bound volumes, oversized documents, or other formats may be approved by NARA on a case-by-case basis. Other camera types not specified in this section may be approved for use on a case-by-case basis.

(b) The power consumption of the equipment normally must not exceed 1.2 kilowatts. Power normally available is 115 volts, 60 hz. Requests for electricity exceeding that normally available must be made at least 90 days in advance.

(c) Equipment having clamps or other devices to exert pressure upon or to affix the document to any surface in a way that might damage the document may not be used.

(d) The equipment must not use a heat generating light source in close enough proximity to the documents to result in their physicial distortion or degradation. All sources of ultraviolet light must be filtered.

[52 FR 20081, May 29, 1987; 52 FR 22415, June 11, 1987; as amended at 64 FR 19905, Apr. 23, 1999]

§ 1254.100 Microfilming procedures.

(a) Equipment used must conform to the equipment standards in § 1254.98.

(b) Documents must be handled in accordance with the training and instructions provided by NARA personnel so that documents are not damaged during copying and so that their original order is maintained. Only persons who have attended NARA training will be permitted to handle the documents or supervise microfilming operations. Training will be offered only in Washington, DC. NARA will charge the requester fees for training services and these fees will be based on direct salary costs (including benefits) and any related supply costs. Such fees will be specified in the written agreement required for project approval in § 1254.94(l).

(c) Documents from only one file unit may be microfilmed at a time. After reproduction is completed, documents removed from files for microfilming must be returned to their original position in the file container, any fasteners removed to facilitate copying must be refastened, and any tabs placed on the documents to identify items to be copied must be removed.

(d) Documents may not be left unattended on the copying equipment or elsewhere.

(e) Under normal microfilming conditions, actual copying time per sheet must not exceed 30 seconds.

(f) Any lights used with the camera must be turned off when the camera is not in actual operation.

(g) Microfilm equipment may be operated only in the presence of the research room attendant or a designated NARA employee. If NARA places microfilm projects in a common research area with other researchers, the project will not be required to pay for monitoring that is ordinarily provided. If the microfilm project is performed in a research room set aside for copying and filming, NARA will charge the project fees for these monitoring services and these fees will be based on direct salary costs (including benefits). When more than one project share the same space, monitoring costs will be divided equally among the projects. The monitoring service fees will be specified in the written agreement required for project approval in § 1254.94(l).

(h) The equipment normally should be in use each working day that it is in a NARA facility. The director of the NARA facility (as defined in § 1252.2 of this chapter) will decide when equipment must be removed because of lack of regular use. The equipment must be promptly removed upon request of the facility director.

(i) NARA assumes no responsibility for loss or damage to microfilm equipment or supplies left unattended.

(j) NARA will inspect the microform output at scheduled intervals during the project to verify that the processed film meets the microfilm preparation

and filming standards required by part 1230 of this chapter. To enable NARA to properly inspect the film, NARA must receive the film within 5 days after it has been processed. The person or organization producing the microfilm will provide NARA with a silver halide duplicate negative of the filmed records (see § 1254.94(d)) according to the schedule shown in (k). If the processed film does not meet the standards, NARA may require that the records be refilmed.

(k) When 10,000 or fewer images are filmed, the person or organization producing the microfilm will provide NARA with a silver halide duplicate negative upon completion of the project. When the project involves more than 10,000 images, a silver halide duplicate negative of the first completed roll or segment of the project reproducing this image count will be provided to NARA for evaluation; subsequent completed segments of the project, in quantities approximating 100,000 or fewer images, will be provided to NARA within 30 days after filming unless NARA approved other arrangements.

[52 FR 20081, May 29, 1987, as amended at 64 FR 19905, Apr. 23, 1999]

§ 1254.102 Rescinding permission.

NARA may, at any time, rescind permission to microfilm records:

(a) If the person or organization fails to comply with the microfilming procedures in § 1254.100;

(b) If inspection of the processed microfilm reveals persistent problems with the quality of the filming or processing;

(c) If the person or organization fails to proceed with the microfilming or project as indicated in the request, or

(d) If the microfilming project is having an unanticipated adverse effect on the condition of the documents or the space set aside in the NARA facility for microfilming.

(e) If the person or organization fails to pay NARA fees in the agreed to amount or on the agreed to payment schedule.

[52 FR 20081, May 29, 1987, as amended at 64 FR 19906, Apr. 23, 1999]

PART 1256—RESTRICTIONS ON THE USE OF RECORDS

Sec.
1256.1 Scope of part.
1256.2 Restrictions on access.
1256.4 Access to records containing personal information.

Subpart A—General Restrictions

1256.10 National security information.
1256.12 Information exempted from disclosure by statute.
1256.14 Trade secrets and commercial or financial information.
1256.16 Information which would invade the privacy of an individual.
1256.18 Information related to law enforcement investigations.

Subpart B—Specific Restrictions

1256.40 Agency-imposed restrictions.

Subpart C—Domestic Distribution of United States Information Agency Materials in the National Archives of the United States

1256.50 Scope of subpart.
1256.52 Purpose.
1256.54 Definition.
1256.56 Transfer of USIA audiovisual records to NARA.
1256.58 Domestic distribution of USIA audiovisual records transferred to NARA.
1256.60 Fees.

AUTHORITY: 44 U.S.C. 2101–2118; 22 U.S.C. 1461(b).

§ 1256.1 Scope of part.

This part contains material referred to in § 1254.30.

[40 FR 56892, Dec. 5, 1975. Redesignated and amended at 50 FR 15723, 15727, Apr. 19, 1985]

§ 1256.2 Restrictions on access.

The use of some archives and donated historical materials transferred to the National Archives of the United States, especially those of recent date, is subject to restrictions prescribed in statute or Executive order, or restrictions specified by the donor or agency from which the records were transferred and imposed by the Archivist of the United States. Restrictions on access to particular records that have been specified by the donor or transferring agency are known as ''specific restrictions.'' Restrictions on access that may apply to

more than one record group are termed ''general restrictions,'' and apply to the kinds of information or classes of records designated, regardless of the record group to which such records have been allocated. Both specific and general restrictions have been published in the ''Guide to the National Archives of the United States.'' (See § 1254.30.) Subparts A and B contain restrictions that have been added or revised since the publication of the latest edition of the Guide.

[40 FR 56892, Dec. 5, 1975. Redesignated at 50 FR 15723, Apr. 19, 1985]

§ 1256.4 Access to records containing personal information.

(a) *NARA policy*. Access to archival records containing information access to which would invade the privacy of an individual is restricted by § 1256.16.

(1) NARA may authorize access to such records for the purpose of statistical or quantitative research to qualified persons doing biomedical research under the conditions outlined in this section.

(2) If NARA is able to make a copy of such records with all personal identifiers masked or deleted, NARA will make such a ''sanitized'' copy of the record available to all researchers in accordance with part 1254 of this chapter.

(3) NARA will not grant access to restricted census and survey records of the Bureau of the Census less than 72 years old containing data identifying individuals enumerated in population censuses in accordance with 44 U.S.C. 2108(b).

(4) NARA will not grant access contrary to a specific restriction to records which have specific restrictions on access imposed by the agency of origin in accordance with § 1256.40.

(b) *Request for access*. Researchers who wish to have access to records the use of which is restricted by § 1256.16 to conduct biomedical research must submit a written request to the Assistant Archivist for the National Archives (NN), National Archives and Records Administration, Washington, DC 20408. OMB control number 3095–0002 has been assigned to this collection of information requirement. Researchers are encouraged to consult informally NARA prior to submitting the formal request. The request must include the following information:

(1) Name and mailing address;

(2) Institutional affiliation and position, if applicable;

(3) List of published research;

(4) References from two persons who have first-hand knowledge of the requester's qualifications to perform the research;

(5) A statement of the nature of the research to be conducted and any plans for publication or presentation of the research findings;

(6) A listing of all sources of great funds supporting the research project or its publication;

(7) A statement of the methodology to be used;

(8) A statement of the administrative, technical, and physical safeguards to be employed by the researcher to prevent unauthorized use or disclosure of the records;

(9) A listing of the record groups and series titles to be used; and

(10) A statement that the researcher will abide by the conditions of access to be prescribed by NARA and that the researcher will assume responsibility for the action of all persons working with the researcher on the project.

(c) *Access Review Committee*. Requests made under paragraph (b) of this section will be reviewed by NARA's Access Review Committee, which is composed of the Deputy Archivist of the United States, the Assistant Archivist for the National Archives, and the director(s) of the NARA division(s) which has custody of the requested records. The Committee may consult other persons within and outside the Federal Government who are knowledgeable in the research field for assistance in evaluating a request.

(1) The Committee will examine the request to determine:

(i) Whether the requested information is of such a highly sensitive personal nature that disclosure should not be permitted even for biomedical statistical or quantitative research;

(ii) Whether the methodology proposed by the requester will permit the researcher to obtain the projected research results without revealing personally identifying information;

(iii) Whether the research results will be published or presented at an academic or research conference;

(iv) Whether the requester is a *bona-fide* biomedical researcher who has previous experience in conducting statistical research projects and publishing articles or books on such research;

(v) Whether the safeguards proposed by the requester will adequately protect the personal information; and

(vi) Whether NARA has sufficient staff and space available to safeguard privacy interests necessary to accommodate the research project.

(2) The decision of the Committee will be made in writing to the requester within 15 workdays after receipt of a completed request. At the discretion of the Committee, the researcher may meet with the Committee to discuss the project or to discuss revising the research proposal to meet possible objections of the Committee.

(d) *Conditions of access.* Researchers who are granted access to restricted records, all others associated with the research project who will have access to personally identifiable information from the records, and the manager of any ADP facility handling the records or data elements containing personal identifiers shall agree in writing to maintain the confidentiality of the information and to adhere to the conditions of access imposed by NARA. NARA may impose some or all of the following conditions of access on any project; additional conditions may be imposed on the use of specific records or on specific projects:

(1) The records may be used only for the purpose of the statistical research and for the statistical reporting of research findings as described in the approved research project. The records may not be used for any other purpose without NARA approval;

(2) The records and copies of any data elements which permit the identification of an individual or which can be identified with an individual may not be transferred to any person or institution not directly involved with the approved research project;

(3) Reasonable administrative, technical, and physical safeguards, as approved by NARA, to prevent unauthorized use or disclosure of the records shall be established by the researcher and followed by all persons associated with the research project;

(4) When required by NARA, the records shall be consulted at the NARA facility where the records are located;

(5) Any individually identifiable information in the researcher's notes or in authorized copies of the records shall be rendered anonymous by the researcher at the earliest possible time consistent with the purpose of the research project;

(6) Persons who are identified in the records may not be contacted by or on behalf of the researcher;

(7) Prior to publication or public presentation of the data, the final research product(s) shall be provided to the Assistant Archivist for the National Archives for review. NARA's review shall be limited to ensuring that there is no possible identification of individuals in the research findings. NARA will not evaluate the validity of the research findings;

(8) All research notes containing personally identifiable information from privacy-restricted records and/or copies of such records shall, upon completion of the project, be destroyed or returned to NARA, whichever condition NARA has imposed as a condition of access. If the notes and/or copies are destroyed, the researcher shall verify in writing to the Assistant Archivist for the National Archives that the research notes and/or copies have been destroyed.

(e) *Noncompliance with conditions of access.* If NARA discovers that a researcher has violated any of the conditions of access imposed by NARA, NARA shall take steps to revoke the NARA research privileges of that person and shall consult with the NARA legal counsel to determine any other steps to be taken to prevent any further disclosure of the personal information concerned. NARA may also inform the following persons and organizations of the researcher's failure to follow the conditions of use:

(1) The institution with which the researcher is affiliated, if applicable;

(2) Persons who served as references in the application for access;

(3) Organizations which provided grant funds for the project;

(4) The sponsor of the publication or public presentation; and/or

(5) Appropriate professional organizations.

[53 FR 6821, Mar. 3, 1988]

Subpart A—General Restrictions

§ 1256.10 National security information.

(a) *Records*. Records containing information regarding national defense or foreign policy and properly classified under an Executive order.

(b) *Restrictions*. Such records may be disclosed only in accordance with the provisions of such Executive order and its implementing directive.

(c) *Imposed by*. Archivist of the United States in accordance with 5 U.S.C. 552 and 44 U.S.C. 2108.

[48 FR 6540, Feb. 14, 1983. Redesignated at 50 FR 15723, Apr. 19, 1985]

§ 1256.12 Information exempted from disclosure by statute.

(a) *Records*. Records containing information which is specifically exempted from disclosure by statute.

(b) *Restrictions*. Such records may be disclosed only in accordance with the provisions of 44 U.S.C. 2108.

(c) *Imposed by*. Archivist of the United States in accordance with 5 U.S.C. 552 and 44 U.S.C. 2108.

[48 FR 6541, Feb. 14, 1983, as amended at 48 FR 45393, Oct. 5, 1983. Redesignated at 50 FR 15723, Apr. 19, 1985]

§ 1256.14 Trade secrets and commercial or financial information.

(a) *Records*. Records not restricted by statute but which contain trade secrets and commercial or financial information submitted to the government with an expressed or implied understanding of confidentiality.

(b) *Restrictions*. Such records may be disclosed only if:

(1) The party that provided the information agrees to its release; or

(2) In the judgment of the Archivist of the United States, the passage of time is such that release of the information would not result in substantial competitive harm.

(c) *Imposed by*. Archivist of the United States in accordance with 5 U.S.C. 552 and 44 U.S.C. 2108.

[48 FR 6541, Feb. 14, 1983. Redesignated at 50 FR 15723, Apr. 19, 1985]

§ 1256.16 Information which would invade the privacy of an individual.

(a) *Records*. Records containing information about a living individual which reveal details of a highly personal nature that the individual could reasonably assert a claim to withhold from the public to avoid a clearly unwarranted invasion of privacy, including but not limited to information about the physical or mental health or the medical or psychiatric care or treatment of the individual, and that—

(1) Contain personal information not known to have been previously made public, and

(2) Relate to events less than 75 years old.

(b) *Restrictions*. Such records may be disclosed only:

(1) To those officers and employees of the agency that transferred the records to the National Archives who have a need for the record in the performance of their official duties;

(2) To those officers and employees of the agency that originated the information in the records who have a need for the records in the performance of their official duties;

(3) To researchers for the purpose of statistical or quantitative research when such researchers have provided the National Archives with adequate written assurance that the record will be used solely as a statistical research or reporting record and that no individually identifiable information will be disclosed; or

(4) To the subject individual or his duly authorized representative (the individual requesting access will be required to furnish reasonable and appropriate identification). Access will not be granted, however, to records containing the following categories of information:

(i) Investigatory material compiled for law enforcement purposes or for the purpose of determining suitability, eligibility, or qualifications for Federal civilian employment, military service, or Federal contracts if the identity of

the source who furnished the information to the Government under an expressed or implied promise of confidentiality is revealed;

(ii) Evaluation material used to determine potential for promotion in the armed services if the identity of the source who furnished the information to the government under an expressed or implied promise of confidentiality is revealed; and

(iii) Security classified material.

(c) *Imposed by*. Archivist of the United States in accordance with 5 U.S.C. 552 and 44 U.S.C. 2108.

[48 FR 6541, Feb. 14, 1983. Redesignated at 50 FR 15723, Apr. 19, 1985]

§ 1256.18 Information related to law enforcement investigations.

(a) *Records*. Records compiled for law enforcement purposes.

(b) *Restrictions*. Such records may be disclosed only:

(1) If the release of the information does not interfere with enforcement proceedings, and

(2) If confidential sources and/or confidential information are not revealed, and

(3) If the release of the information would not constitute an unwarranted invasion of personal privacy, and

(4) If confidential investigation techniques are not described, and

(5) If the release of the information would not endanger the safety of law enforcement personnel, or

(6) If, in the judgment of the Archivist of the United States the passage of time is such that:

(i) The safety of persons is not endangered, and

(ii) The public interest in disclosure outweighs the continued need for confidentiality.

(c) *Imposed by*. Archivist of the United States in accordance with 5 U.S.C. 552 and 44 U.S.C. 2108.

[48 FR 6541, Feb. 14, 1983, as amended at 48 FR 45393, Oct. 5, 1983. Redesignated at 50 FR 15723, Apr. 19, 1985]

Subpart B—Specific Restrictions

§ 1256.40 Agency-imposed restrictions.

Some records in NARA legal custody are covered by restrictions imposed by the agency of origin that are in conformance with the Freedom of Information Act.

[50 FR 15727, Apr. 19, 1985]

Subpart C—Domestic Distribution of United States Information Agency Materials in the National Archives of the United States

SOURCE: 62 FR 31725, June 11, 1997, unless otherwise noted.

§ 1256.50 Scope of subpart.

This subpart prescribes procedures governing the public availability of audiovisual records and other materials subject to 22 U.S.C. 1461(b) that have been transferred to the National Archives of the United States by the United States Information Agency (USIA).

§ 1256.52 Purpose.

This subpart implements section 501 of the United States Information and Educational Exchange Act of 1948 (22 U.S.C. 1461), as amended by section 202 of Public Law 101–246 (104 Stat. 49, Feb. 16, 1990). This subpart prescribes procedures by which the public may inspect and obtain copies of USIA audiovisual records and other materials prepared for dissemination abroad that have been transferred to NARA for preservation and domestic distribution.

§ 1256.54 Definition.

For the purposes of this subpart—*Audiovisual records* mean motion picture films, videotapes, and sound recordings, and other materials regardless of physical form or characteristics that were prepared for dissemination abroad.

§ 1256.56 Transfer of USIA audiovisual records to NARA.

The provisions of 44 U.S.C. 2107 and 36 CFR part 1228 apply to the transfer of USIA audiovisual records to NARA, and to their deposit with the National Archives of the United States. At the time the audiovisual records are transferred to NARA, the Director of USIA, in accordance with § 1228.184(e) of this

chapter, will also transfer any production or title files bearing on the ownership of rights in the productions in connection with USIA's official overseas programming.

§ 1256.58 Domestic distribution of USIA audiovisual records transferred to NARA.

No USIA audiovisual records in the National Archives of the United States that were prepared for dissemination abroad will be available for copying until it has been at least 12 years since such materials were first disseminated abroad, or, in the case of materials prepared for foreign dissemination but not disseminated abroad, until it has been at least 12 years since the preparation of the materials.

(a) *Access to USIA audiovisual records that neither have copyright protection nor contain copyright material.* USIA audiovisual records prepared for dissemination abroad that NARA determines neither have copyright protection nor contain copyrighted material are available for examination and copying in accordance with the regulations set forth in parts 1252, 1253, 1254, 1256, and 1258 of this chapter. In determining whether materials have copyright protection or contain copyrighted material, NARA will rely on information contained within or affixed to individual records (e.g., copyright notices); information contained within relevant USIA production, title, or other files that have been transferred to NARA by USIA; information provided by requesters pursuant to paragraph (b)(2) of this section (e.g., evidence from the Copyright Office that copyright has lapsed or expired); and information provided by copyright or license holders.

(b) *Reproduction of USIA audiovisual records that either have copyright protection or contain copyrighted material.*

(1) USIA audiovisual records prepared for dissemination abroad that NARA determines may have copyright protection or may contain copyrighted material will be made available for examination in NARA research facilities in accordance with the regulations set forth in this Title.

(2) Copies of USIA audiovisual records prepared for dissemination abroad that NARA determines may have copyright protection or may contain copyrighted material will be provided to persons seeking the release of such materials in the United States once NARA has:

(i) Ensured, in accordance with paragraph (b)(3) of this section, that the persons seeking copies have secured and paid for necessary United States rights and licenses;

(ii) Been provided with evidence from the Copyright Office sufficient to determine that copyright protection in the materials sought, or relevant portions therein, has lapsed or expired; or

(iii) Received a requester's signed certification in accordance with paragraph (b)(4) of this section that the materials sought will be used only for purposes permitted by the Copyright Act of 1976, as amended, including the fair use provisions of 17 U.S.C. 107. No copies of USIA audiovisual records will be provided until the fees authorized under part 1258 of this chapter have been paid to NARA.

(3) If NARA has determined that a USIA audiovisual record prepared for dissemination abroad may have copyright protection or may contain copyrighted material, persons seeking the release of such material in the United States may obtain copies of the material by submitting to NARA written evidence from all copyright and/or license owner(s) that any necessary fees have been paid or waived and any necessary licenses have been secured.

(4) If NARA has determined that a USIA audiovisual record prepared for dissemination abroad may have copyright protection or may contain copyrighted material, persons seeking the release of such material in the United States may obtain copies of the material by submitting to NARA the following certification statement:

I, (printed name of individual), certify that my use of the copyrighted portions of the (name or title and NARA identifier of work involved) provided to me by the National Archives and Records Administration (NARA), will be limited to private study, scholarship, or research purposes, or for other purposes permitted by the Copyright Act of 1976, as amended. I understand that I am solely responsible for the subsequent use of the copyrighted portions of the work identified above.

(c) In every instance where a copy of an audiovisual record is provided under this subpart, and NARA has determined that the work being reproduced may have copyright protection or may contain copyrighted material, NARA shall provide a warning notice of copyright.

(d) Nothing in this section shall limit NARA's ability to make copies of USIA audiovisual records for preservation, arrangement, repair and rehabilitation, description, exhibition, security, or reference purposes.

§ 1256.60 Fees.

Copies or reproductions of audiovisual records will only be provided under this subpart upon payment of fees in accordance with 44 U.S.C. 2116(c) and 22 U.S.C. 1461(b)(3).

PART 1258—FEES

Sec.

1258.1 What is the authority for this part?
1258.2 What does the NARA reproduction fee schedule cover?
1258.4 What reproductions are not covered by the NARA fee schedule?
1258.6 When does NARA provide reproductions without charge?
1258.8 Who pays to have a copy negative made?
1258.10 What is NARA's mail order policy?
1258.12 NARA reproduction fee schedule.
1258.14 What is NARA's payment policy?
1258.16 Effective date.

AUTHORITY: 44 U.S.C. 2116(c) and 2307.

SOURCE: 65 FR 60866, Oct. 13, 2000, unless otherwise noted.

§ 1258.1 What is the authority for this part?

(a) 44 U.S.C. 2116(c) authorizes NARA to charge a fee for making or authenticating copies or reproductions of materials transferred to the Archivist's custody. This fee is to be ''fixed by the Archivist at a level which will recover, so far as practicable, all elements of such costs and may, in the Archivist's discretion, include increments for the estimated replacement costs of equipment.'' The fees collected for reproductions are to be paid into and expended as part of the National Archives Trust Fund.

(b) 44 U.S.C. 2307 authorizes the Archivist of the United States, as Chairman of the National Archives Trust Fund Board, to sell copies of microfilm publications at a price that will cover their cost, plus 10 percent.

§ 1258.2 What does the NARA reproduction fee schedule cover?

The NARA reproduction fee schedule in § 1258.12 covers reproduction of:

(a) NARA archival records, donated historical materials, Presidential records, and Nixon Presidential historical materials except as otherwise provided in §§ 1258.4 and 1258.6. Some reproduction services listed in § 1258.12 may not be available at all NARA facilities;

(b) Other Federal records stored in NARA Federal records centers, except when NARA and the agency that transferred the records have agreed to apply that agency's fee schedule; and

(c) Records filed with the Office of the Federal Register.

§ 1258.4 What reproductions are not covered by the NARA fee schedule?

The following categories are not covered by the NARA fee schedule in § 1258.12.

(a) Still photography, including aerial film, and oversize maps and drawings. Information on the availability and prices of reproductions of records held in the Special Media Archives Services Division (NWCS), 8601 Adelphi Rd., College Park, MD 20740–6001, and in the Presidential libraries and regional archives (see 36 CFR 1253.3 and 36 CFR 1253.7 for addresses) may be obtained from the unit which has the original records.

(b) Motion picture, sound recording, and video holdings of the National Archives and Presidential libraries. Information on the availability of and prices for reproduction of these materials are available from the Special Media Archives Services Division (NWCS), 8601 Adelphi Rd., Room 3340, College Park, MD 20740–6001, or from the Presidential library which has such materials (see 36 CFR 1253.3 for addresses).

(c) Electronic records. Information on the availability of and prices for duplication are available from the Electronic and Special Media Records Services Division (NWME), 8601 Adelphi Rd., Room 5320, College Park, MD

20740–6001, or from the Presidential library which has such materials (see 36 CFR 1253.3 for addresses).

(d) Reproduction of the following types of records using the specified order form:

Type of record and order form	Price
(1) Passenger arrival lists (order form NATF Form 81)	$17.25
(2) Federal Census requests (order form NATF Form 82)	17.50
(3) Eastern Cherokee applications to the Court of Claims (order form NATF Form 83)	17.50
(4) Land entry records (order form NATF 84)	17.75
(5) Bounty land warrant application files (order form NATF Form 85)	17.25
(6) Pension files more than 75 years old (order form NATF Form 85)—complete file	37.00
(7) Pension documents packet (order form NATF Form 85)	14.75
(8) Military service files more than 75 years old (order form NATF Form 86)	17.00

(e) National Archives Trust Fund Board publications, including microfilm publications. Prices are available from the Customer Service Center (NWCC2), 8601 Adelphi Rd., Room 1000, College Park, MD 20740–6001.

(f) Reproductions of NARA operational records made in response to FOIA requests under part 1250 of this chapter.

(g) Orders for expedited service (''rush'' orders) for reproduction of still pictures and motion picture and video recordings among the holdings of a Presidential library. Orders may be accepted on an expedited basis by the library when the library determines that sufficient personnel are available to handle such orders or that the NARA contractor making the reproduction can provide the service. Rush orders are subject to a surcharge to cover the additional cost of providing expedited service.

(h) Orders requiring additional expense to meet unusual customer specifications such as the use of special techniques to make a photographic copy more legible than the original document, or unusual format or background requirement for negative microfilm. Fees for these orders are computed for each order.

§ 1258.6 When does NARA provide reproductions without charge?

NARA does not charge a fee for reproduction or certification in the instances described in this section, if the reproduction is not a color reproduction. Color reproductions are furnished to the public and the Government only on a fee basis.

(a) When NARA furnishes copies of documents to other elements of the Federal Government. However, a fee may be charged if the appropriate director determines that the service cannot be performed without reimbursement;

(b) When NARA wishes to disseminate information about its activities to the general public through press, radio, television, and newsreel representatives;

(c) When the reproduction is to furnish the donor of a document or other gift with a copy of the original;

(d) When the reproduction is for individuals or associations having official voluntary or cooperative relations with NARA in its work;

(e) When the reproduction is for a foreign, State, or local government or an international agency and furnishing it without charge is an appropriate courtesy;

(f) For records of other Federal agencies in NARA Federal records centers only:

(1) When furnishing the service free conforms to generally established business custom, such as furnishing personal reference data to prospective employers of former Government employees;

(2) When the reproduction of not more than one copy of the document is required to obtain from the Government financial benefits to which the

requesting person may be entitled (*e.g.*, veterans or their dependents, employees with workmen's compensation claims, or persons insured by the Government);

(3) When the reproduction of not more than one copy of a hearing or other formal proceeding involving security requirements for Federal employment is requested by a person directly concerned in the hearing or proceeding; and

(4) When the reproduction of not more than one copy of a document is for a person who has been required to furnish a personal document to the Government (*e.g.*, a birth certificate required to be given to an agency where the original cannot be returned to the individual).

§ 1258.8 Who pays to have a copy negative made?

Requests for photographs of materials for which no copy negative is on file are handled as follows:

(a) The customer is charged to make the copy negative, except in cases where NARA wishes to retain the negative for its own use.

(b) When no fee is charged the negative becomes the property of NARA. When a fee is charged the negative becomes the property of the customer.

§ 1258.10 What is NARA's mail order policy?

(a) There is a minimum fee of $10.00 per order for reproductions that are sent by mail to the customer.

(b) Orders to addresses in the United States are sent either first class or UPS depending on the weight of the order and availability of UPS service. When a customer requests special mailing services (such as Express Mail or registered mail) and/or shipment to a foreign address, the cost of the special service and/or additional postage for foreign mail is added to the cost of the reproductions.

§ 1258.12 NARA reproduction fee schedule.

(a) Certification: $6.

(b) Electrostatic copying (in order to preserve certain records which are in poor physical condition, NARA may restrict customers to photographic or microfilm copies instead of electrostatic copies):

Service	Fee
(1) Paper-to-paper copies (up to and including 11 in. by 17 in.) made by the customer on a NARA self-service copier	[1]$0.15
(2) Paper-to-paper copies (up to and including 11 in. by 17 in.) made by NARA staff	[1]0.50
(3) Oversized electrostatic copies	[2]2.70
(4) Electrostatic copies (22 in. by 34 in.)	[1]2.70
(5) Microfilm or microfiche to paper copies made by the customer on a NARA self-service copier	[1]0.30
(6) Microfilm or microfiche to paper copies made by NARA staff	[1]1.90

[1] Per copy.
[2] Per linear foot.

(c) Original negative microfilm (paper-to-microfilm): $0.70 per image.

(d) Self-service video copying in the Motion Picture, Sound and Video Research Room:

Service	Fee
(1) Initial 90-min use of video copying station with 120-minute videocassette	$9.75
(2) Additional 90-minute use of video copying station with no videocassette	6.25
(3) Blank 120-minute VHS videocassette	3.50

(e) Self-service Polaroid prints: $5.75 per print.

(f) Unlisted processes: For reproductions not covered by this fee schedule, see also § 1258.4. Fees for other reproduction processes are computed upon request.

§ 1258.14 What is NARA's payment policy?

(a) *Form of payment.* Fees may be paid in cash, by check or money order made payable to the National Archives Trust Fund, or by selected credit cards. Payments from outside the United States must be made by international money order payable in U.S. dollars or a check drawn on a U.S. bank.

(b) *Timing.* Fees must be paid in advance except when the appropriate director approves a request for handling them on an account receivable basis. Purchasers with special billing requirements must state them when placing orders and must complete any special forms for NARA approval in advance.

§ 1258.16 Effective date.

The fees in this part are effective on November 13, 2000. If your order was received by NARA before this effective date, we will charge the fees in effect at the time the order was received.

SUBCHAPTER D—DECLASSIFICATION

PART 1260—DECLASSIFICATION OF NATIONAL SECURITY INFORMATION

Subpart A—General Information

Sec.
1260.1 What is the purpose of this regulation?
1260.2 Definitions.
1260.4 What NARA holdings are covered by this regulation?
1260.6 What is the authority for this regulation?

Subpart B—Responsibilities

1260.20 Who is responsible for the declassification of national security-classified Executive Branch information that has been accessioned by NARA?
1260.22 Who is responsible for the declassification of national security-classified White House originated information in NARA's holdings?
1260.24 Who is responsible for declassification of foreign government information in NARA's holdings?
1260.26 Who is responsible for issuing special procedures for declassification of information concerning intelligence or cryptography in NARA's holdings?
1260.28 Who is responsible for declassifying records that contain nuclear-related information classified under the Atomic Energy Act of 1954, as amended, commonly referred to as Restricted Data and Formerly Restricted Data?

Subpart C—Systematic Review

1260.40 How will records at NARA be reviewed for declassification?
1260.42 What are the procedures for agency personnel to review records at a NARA facility?
1260.44 Will NARA loan accessioned records back to the agencies to conduct declassification review?

Subpart D—Mandatory Review

EXECUTIVE BRANCH RECORDS

1260.50 What procedures does NARA follow when it receives a request for Executive Branch records under mandatory review?
1260.52 What are agency responsibilities when it receives a mandatory review request forwarded by NARA?
1260.54 What is the appeal process when a mandatory review request for Executive Branch information is denied?

WHITE HOUSE ORIGINATED INFORMATION

1260.56 Is White House originated information subject to mandatory review?
1260.58 What are the procedures for requesting a mandatory review of White House originated information?
1260.60 What are agency responsibilities with regard to mandatory review requests for White House originated information?
1260.62 What is the appeal process when a mandatory review request for White House originated information is denied?

Subpart E—Reclassification

1260.70 Can Executive Branch information be reclassified?
1260.72 Can White House information be reclassified?
1260.74 Can NARA appeal a request to reclassify information?

AUTHORITY: 44 U.S.C. 2101 to 2118; 5 U.S.C. 552; E.O. 12958, 60 FR 19825, 3 CFR, 1995 Comp., p.333; E.O. 13142, 64 FR 66089, 3 CFR, 1999 Comp., p. 236.

SOURCE: 65 FR 34974, June 1, 2000, unless otherwise noted.

Subpart A—General Information

§ 1260.1 What is the purpose of this regulation?

This regulation defines the responsibilities of NARA and other Federal agencies for declassification of national security classified information in the holdings of NARA. This part also provides procedures for conducting systematic reviews of NARA holdings and for processing mandatory review requests for NARA holdings. Regulations for researchers wishing to request Federal records under the Freedom of Information Act (FOIA) or under mandatory review can be found in 36 CFR 1254.38.

§ 1260.2 Definitions.

(a) *Systematic declassification review* means the review for declassification of national security-classified information contained in records that have been determined by the Archivist of the United States to have permanent value in accordance with 44 U.S.C. 2107.

(b) *Mandatory declassification review* means the review for declassification

of national security-classified information in response to a request for declassification that meets the requirements under section 3.6 of Executive Order 12958.

§ 1260.4 What NARA holdings are covered by this regulation?

The NARA holdings covered by this regulation are records legally transferred to the National Archives and Records Administration (NARA), including Federal records accessioned into the National Archives of the United States; Presidential records; Nixon Presidential materials; and donated historical materials in Presidential Libraries and in the National Archives of the United States.

§ 1260.6 What is the authority for this regulation?

Declassification of and public access to national security information is governed by Executive Order 12958 of April 17, 1995 (3 CFR 1995 Comp., p. 333), Executive Order 13142 of November 19, 1999 (3 CFR 1999 Comp., p. 236), and by the Information Security Oversight Office Implementing Directive for Executive Order 12958 (32 CFR Part 2001).

Subpart B—Responsibilities

§ 1260.20 Who is responsible for the declassification of national security-classified Executive Branch information that has been accessioned by NARA?

(a) Consistent with the requirements of section 3.4 of Executive Order 12958 and Executive Order 13142 on automatic declassification, the originating agency is responsible for its declassification, but may delegate declassification authority to NARA in the form of declassification guidance.

(b) If an agency does not delegate declassification authority to NARA, the agency is responsible for reviewing the records prior to the date that the records become eligible for automatic declassification.

(c) NARA is responsible for the declassification of records of a defunct agency that has no successor in function. NARA will consult with agencies having primary subject matter interest before making declassification determinations.

§ 1260.22 Who is responsible for the declassification of national security-classified White House originated information in NARA's holdings?

(a) NARA is responsible for declassification of information from a previous administration that was originated by:

(1) The President;

(2) The White House staff;

(3) Committees, commissions, or boards appointed by the President; or

(4) Others specifically providing advice and counsel to the President or acting on behalf of the President.

(b) NARA will consult with agencies having primary subject matter interest before making declassification determinations.

§ 1260.24 Who is responsible for declassification of foreign government information in NARA's holdings?

(a) The agency that received or classified the information is responsible for its declassification.

(b) In the case of a defunct agency, NARA is responsible for declassification of foreign government information in its holdings and will consult with the agencies having primary subject matter interest before making declassification determinations.

§ 1260.26 Who is responsible for issuing special procedures for declassification of information concerning intelligence or cryptography in NARA's holdings?

(a) The Director of Central Intelligence is responsible for issuing special procedures for declassification of information concerning intelligence activities and intelligence sources and methods.

(b) The Secretary of Defense is responsible for issuing special procedures for declassification of information concerning cryptography.

§ 1260.28 Who is responsible for declassifying records that contain nuclear-related information classified under the Atomic Energy Act of 1954, as amended, commonly referred to as Restricted Data and Formerly Restricted Data?

Only designated officials within the Department of Energy may declassify records containing Restricted Data. Records containing Formerly Restricted Data may only be declassified by designated individuals within the Department of Energy or by appropriate individuals in the Department of Defense.

Subpart C—Systematic Review

§ 1260.40 How will records at NARA be reviewed for declassification?

(a) Consistent with the requirements of section 3.4 of Executive Order 12958 and Executive Order 13142 on automatic declassification, NARA staff will systematically review for declassification records for which the originating agencies have provided declassification guidance. The originating agency must review records for which it has not provided declassification guidance.

(b) Agencies may choose to review their own records that have been accessioned by NARA by sending personnel to the NARA facility where the records are located to conduct the declassification review.

§ 1260.42 What are the procedures for agency personnel to review records at a NARA facility?

(a) NARA will make the records available to properly cleared agency reviewers. NARA will provide space for agency reviewers in the facility in which the records are located as space is available. NARA will also provide training and guidance for agency reviewers on the proper handling of archival materials.

(b) Agency reviewers must:

(1) Follow NARA security regulations and abide by NARA procedures for handling archival materials;

(2) Follow NARA procedures for identifying and marking documents that cannot be declassified; and

(3) Obtain permission from NARA before bringing into a NARA facility computers, scanners, tape recorders, microfilm readers and other equipment necessary to view or copy records. NARA will not allow the use of any equipment that poses an unacceptable risk of damage to archival materials. See 36 CFR 1254.26 and 1254.27 for more information on acceptable equipment.

§ 1260.44 Will NARA loan accessioned records back to the agencies to conduct declassification review?

In rare cases, when agency reviewers cannot be accommodated at a NARA facility, NARA will consider a request to loan records back to an originating agency in the Washington, DC, metropolitan area for declassification review. Each request will be judged on a case-by-case basis. The requesting agency must:

(a) Ensure that the facility in which the documents will be stored and reviewed passes a NARA inspection to ensure that the facility maintains:

(1) The correct archival environment for the storage of permanent records; and

(2) The correct security conditions for the storage and handling of national security-classified materials.

(b) Meet NARA requirements for ensuring the safety of the records;

(c) Abide by NARA procedures for handling of archival materials;

(d) Identify and mark documents that cannot be declassified in accordance with NARA procedures; and

(e) Obtain NARA approval of any equipment such as scanners, copiers, or cameras to ensure that they do not pose an unacceptable risk of damage to archival materials.

Subpart D—Mandatory Review

EXECUTIVE BRANCH RECORDS

§ 1260.50 What procedures does NARA follow when it receives a request for Executive Branch records under mandatory review?

(a) If the requested records are less than 25 years old, NARA refers copies of the records to the originating agency and to agencies that have equities in the information for declassification review. Agencies may also send personnel to a NARA facility where the

records are located to conduct a declassification review, or may delegate declassification authority to NARA in the form of declassification guidance.

(b) If the requested records are more than 25 years old, NARA will review the records using systematic declassification guidance provided by the originating agency and agencies having equities in the information. If the originating agency, or agencies having equities in the information have not provided systematic declassification guidance, or if there is a question regarding the guidance, NARA will refer any requested documents it is unable to declassify to the appropriate agency or agencies for declassification determinations.

(c) When the records were originated by a defunct agency that has no successor agency, NARA is responsible for making the declassification determinations, but will consult with agencies having primary subject matter interest.

(d) In every case, NARA will acknowledge receipt of the request and inform the requester of the action taken. If additional time is necessary to make a declassification determination on material for which NARA has delegated authority, NARA will tell the requester how long it will take to process the request. NARA will also tell the requester if part or all of the requested information is referred to other agencies for declassification review, subject to section 3.7(a) of Executive Order 12958.

§ 1260.52 What are agency responsibilities when it receives a mandatory review request forwarded by NARA?

(a) The agency must make a determination within 180 calendar days after receiving the request or inform NARA of the additional time needed to process the request. If an initial decision has not been made on the request within 1 year after the original date of the request, the requester may appeal to the Interagency Security Classification Appeals Panel (ISCAP).

(b) The agency must notify NARA of any other agency to which it forwards the request in those cases requiring the declassification determination of another agency.

(c) The agency must return to NARA a complete copy of each declassified document with the agency determination. If documents cannot be declassified in their entirety, the agency must return to NARA a copy of the documents with those portions that must be withheld clearly marked.

(d) The agency must also furnish, for transmission to the requester, a brief statement of the reasons the requested information cannot be declassified and a statement of the requester's right to appeal the decision, along with the procedures for filing an appeal. The agency must also supply for transmission to the requester a contact name and title and the address where the appeal must be sent.

§ 1260.54 What is the appeal process when a mandatory review request for Executive Branch information is denied?

(a) If an agency denies a declassification request under mandatory review, the requester may appeal directly to the appeal authority at that agency.

(b) If requested by the agency, NARA will supply the agency with:

(1) Copies of NARA's letter to the requester transmitting the agency denial; and

(2) Copies of any documents denied in part that were furnished to the requester.

(c) The agency appeal authority must notify NARA in writing of the final determination and of the reasons for any denial.

(d) The agency must furnish to NARA a complete copy of any document they released to the requester only in part, clearly marked to indicate the portions that remain classified. NARA will give the requester a copy of any notifications from the agencies that describe what information has been denied and what the requesters appeal rights are.

(e) In the case of an appeal for information originated by a defunct agency, NARA will notify the requester of the results and furnish copies of documents declassified in full and in part. If the request cannot be declassified in its entirety, NARA will send the requester a brief statement of why the requested

information cannot be declassified and a notice of the right to appeal the determination within 60 calendar days to the Deputy Archivist of the United States, National Archives and Records Administration, 8601 Adelphi Road, College Park, MD 20740–6001.

WHITE HOUSE ORIGINATED INFORMATION

§ 1260.56 Is White House originated information subject to mandatory review?

White House originated information of former Presidents is subject to mandatory review consistent with the Presidential Records Act, 44 U.S.C. 2203, the Presidential Recordings and Materials Preservation Act, 44 U.S.C. 2111 note, and any deeds of gift that pertain to the materials or the respective Presidential administrations pursuant to 44 U.S.C. 2107 and 2111. Unless precluded by such laws or agreements, White House originated information is subject to mandatory or an equivalent agency review for current classification when the materials have been archivally processed or can be identified with specificity. However, records covered by the Presidential Records Act are closed for 5 years after the end of the Presidential administration, or until an integral file segment has been archivally processed, whichever occurs first, pursuant to 44 U.S.C. 2204.

§ 1260.58 What are the procedures for requesting a mandatory review of White House originated information?

(a) NARA will promptly acknowledge to the requester the receipt of a request for White House originated information.

(b) If the requested information is less than 25 years old, NARA will consult with agencies having primary subject matter interest. NARA will forward copies of the requested materials to the agencies and request their recommendations regarding declassification.

(c) If the requested records are more than 25 years old, NARA will review the records using systematic declassification guidance provided by the originating agency and agencies having equities in the information. If the originating agency, or agencies having equities in the information have not provided systematic declassification guidance, or if there is a question regarding the guidance, NARA will refer any requested documents it is unable to declassify to the appropriate agency or agencies for their recommendations regarding declassification.

(d) NARA will notify the requester of the results and furnish copies of the documents declassified in full and in part. If the requested records are not declassified in their entirety, NARA will send the requester a brief statement of the reasons the information cannot be declassified and a notice of the right to appeal the determination within 60 calendar days to the Deputy Archivist of the United States, National Archives and Records Administration, 8601 Adelphi Road, College Park, MD 20740–6001.

§ 1260.60 What are agency responsibilities with regard to mandatory review requests for White House originated information?

When an agency receives a mandatory review request from NARA for consultation on declassification of White House originated material, whether it is an initial request or an appeal, the agency must:

(a) Advise the Archivist whether the information should be declassified in whole or in part or should continue to be exempt from declassification;

(b) Provide NARA a brief statement of the reasons for any denial of declassification; and

(c) Return all reproductions referred for consultation, including a complete copy of each document that should be released only in part, clearly marked to indicate the portions that remain classified.

§ 1260.62 What is the appeal process when a mandatory review request for White House originated information is denied?

(a) When the Deputy Archivist of the United States receives an appeal, he/she will review the decision to deny the information and consult with the appellate authorities in the agencies having primary subject matter interest in the information.

(b) NARA will notify the requester of the determination and make available

any additional information that has been declassified as a result of the requester's appeal.

(c) NARA will also notify the requester of the right to appeal denials of access to the Executive Secretary of the Interagency Security Classification Appeals Panel, Attn: Mandatory Review Appeals, c/o Information Security Oversight Office, National Archives and Records Administration, 700 Pennsylvania Avenue, NW, Room 18N, Washington, DC 20408.

Subpart E—Reclassification

§ 1260.70 Can Executive Branch information be reclassified?

(a) An agency may ask NARA to temporarily close, re-review, and possibly reclassify records and donated historical materials originated by the agency. Records that were declassified in accordance with E.O. 12958 (or predecessor orders) may be reclassified only if the information is less than 25 years old and has not been previously disclosed to the public. Agencies must submit in writing requests to reclassify Executive Branch records to the Assistant Archivist for Records Services—Washington, DC, National Archives and Records Administration, 8601 Adelphi Road, College Park, MD 20740–6001. Requests to reclassify information in Presidential libraries must be submitted in writing to the Assistant Archivist for Presidential Libraries, National Archives and Records Administration, 8601 Adelphi Road, College Park, MD 20740–6001. In the request, the agency must:

(1) Identify the records or donated materials involved as specifically as possible;

(2) Explain the reason the re-review and possible reclassification may be necessary; and

(3) Provide any information the agency may have concerning any previous public disclosure of the information.

(b) If the urgency of the request precludes a written request, an authorized agency official may make a preliminary request by telephone and follow up with a written request within 5 workdays.

§ 1260.72 Can White House originated information be reclassified?

An agency may ask NARA to temporarily close, re-review, and possibly reclassify White House originated information that has been declassified in accordance with E.O. 12958 (or predecessor orders) only if it has not been previously disclosed to the public. The agency must follow the same procedures as a request for reclassification of agency originated information in 36 CFR 1260.70, but it must submit the request to the Assistant Archivist for Presidential Libraries, National Archives and Records Administration, 8601 Adelphi Road, College Park, MD 20740–6001.

§ 1260.74 Can NARA appeal a request to reclassify information?

NARA may appeal to the Director of the Information Security Oversight Office any re-review or reclassification request from an agency when, in the Archivist's opinion, the facts of previous disclosure suggest that such action is unwarranted or unjustified. NARA will notify the requesting agency that it is appealing the request at the same time that it initiates the appeal.

SUBCHAPTER E—PRESIDENTIAL RECORDS

PART 1270—PRESIDENTIAL RECORDS

Subpart A—General Provisions

Sec.
1270.10 Scope of part.
1270.12 Application.
1270.14 Definitions.

Subpart B—Actions Taken on Behalf of Former Presidents

1270.20 Designation of person or persons to act for former President.
1270.22 When Archivist may act for former President.

Subpart C—Disposal of Presidential Records

1270.30 Disposal of Presidential Records by incumbent President.
1270.32 Disposal of Presidential Records in the custody of the Archivist.

Subpart D—Access to Presidential Records

1270.40 Identification of restricted records.
1270.42 Denial of access to public; right to appeal.
1270.44 Exceptions to restricted access.
1270.46 Notice of intent to disclose Presidential records.

Subpart E—Presidential Records Compiled for Law Enforcement Purposes

1270.50 Consultation with law enforcement agencies.

AUTHORITY: The Presidential Records Act of 1978, Pub. L. 95–591, 92 Stat. 2523–27, as amended by the National Archives and Records Administration Act of 1984, Pub. L. 98–497, sec. 107(b)(7), 98 Stat. 2287 (1984) (codified at 44 U.S.C. 2201–07).

SOURCE: 53 FR 50404, Dec. 15, 1988, unless otherwise noted.

Subpart A—General Provisions

§ 1270.10 Scope of part.

These regulations implement the provisions of the Presidential Records Act of 1978, Pub. L. No. 95–591, 92 Stat. 2523–27, as amended by Pub. L. No. 98–497, sec. 107(b)(7), 98 Stat. 2287 (1984) (codified at 44 U.S.C. 2201–07), by setting forth the policies and procedures governing preservation, protection, and disposal of, and access to Presidential and Vice-Presidential records created during a term of office of the President or Vice President beginning on or after January 20, 1981. Nothing in these regulations is intended to govern procedures for assertion of, or response to, any constitutionally based privilege which may be available to an incumbent or former President.

§ 1270.12 Application.

(a) These regulations apply to all Presidential records created during a term of office of the President beginning on or after January 20, 1981.

(b) Vice-Presidential records shall be subject to the provisions of this part in the same manner as Presidential records. The Vice President's duties and responsibilities, with respect to Vice-Presidential records, shall be the same as the President's duties and responsibilities with respect to Presidential records. The Archivist's authority with respect to Vice-Presidential records shall be the same as the Archivist's authority with respect to Presidential records, except that the Archivist may, when he determines it to be in the public interest, enter into an agreement with a non-Federal archival repository for the deposit of Vice-Presidential records.

§ 1270.14 Definitions.

For the purposes of this part—

(a) The terms *documentary material*, *Presidential records*, *personal records*, *Archivist*, and *former President* have the meanings given them by 44 U.S.C. 2201 (1)–(5), respectively.

(b) The term *agency* has the meaning given it by 5 U.S.C. 551(1) (A)–(D) and 552(f).

(c) The term *Presidential archival depository* has the meaning given it by 44 U.S.C. 2101(1).

(d) The term *Vice-Presidential records* means documentary materials, or any reasonably segregable portion thereof, created or received by the Vice President, his immediate staff, or a unit or individual of the Office of the Vice President whose function is to advise and assist the Vice President, in the

course of conducting activities which relate to or have an effect upon the carrying out of the constitutional, statutory, or other official or ceremonial duties of the Vice President. The term includes documentary materials of the kind included under the term *Presidential records*.

(e) The term *filed* means the date something is received in the office of the official to whom it is addressed.

Subpart B—Actions Taken on Behalf of Former Presidents

§ 1270.20 Designation of person or persons to act for former President.

(a) A President or former President may designate some person or persons to exercise, upon death or disability of the President or former President, any or all of the discretion or authority granted to the President or former President by chapter 22 of title 44 U.S.C.

(b) When a President or former President designates a person or persons to act for him pursuant to paragraph (a) of this section, this designation shall be effective only if the Archivist has received notice of the designation before the President or former President dies or is disabled.

(c) The notice required by paragraph (b) of this section shall be in writing, and shall include the following information:

(1) Name(s) of the person or persons designated to act for the President or former President;

(2) The current addresses of the person or persons designated; and

(3) The records, identified with reasonable specificity, over which the designee(s) will exercise discretion or authority.

§ 1270.22 When Archivist may act for former President.

In those instances where a President has specified, in accordance with 44 U.S.C. 2204(a), restrictions on access to Presidential records, but has not made a designation under § 1270.20 of this subpart, the Archivist shall, upon the death or disability of a President or former President, exercise the discretion or authority granted to a President or former President by 44 U.S.C. 2204.

Subpart C—Disposal of Presidential Records

§ 1270.30 Disposal of Presidential records by incumbent President.

A President may, while in office, dispose of any Presidential records which in his opinion lack administrative, historical, informational, or evidentiary value if one of the following two sets of requirements is satisfied:

(a)(1) The President has obtained the written views of the Archivist concerning the proposed disposal; and

(2) The Archivist states in his written views to the President that he does not intend to request, with respect to the President's proposed disposal of Presidential records, the advice of the Committees on Rules and Administration and Governmental Affairs of the Senate, and the Committees on House Administration and Government Operations of the House of Representatives because he does not consider—

(i) The records proposed for disposal to be of special interest to the Congress; or

(ii) Consultation with the Congress concerning the proposed disposal to be in the public interest; or

(b)(1) The President has obtained the written views of the Archivist concerning the proposed disposal;

(2) The Archivist states in his written views either—

(i) That the records proposed for disposal may be of special interest to the Congress; or

(ii) That consultation with the Congress concerning the proposed disposal is in the public interest; and

(3) The President submits copies of the proposed disposal schedule to the Committees on Rules and Administration and Governmental Affairs of the Senate and the Committees on House Administration and Government Operations of the House of Representatives at least 60 calendar days of continuous session of Congress in advance of the proposed disposal date. For the purpose of this section, continuity of session is broken only by an adjournment of Congress *sine die*, and the days on which either House is not in session because of

an adjournment of more than 3 days to a day certain are excluded in the computation of the days in which Congress is in continuous session.

§ 1270.32 Disposal of Presidential Records in the custody of the Archivist.

(a) The Archivist may dispose of Presidential records which he has appraised and determined to have insufficient administrative, historical, informational, or evidentiary value to warrant their continued preservation.

(b) When Presidential records are scheduled for disposal pursuant to paragraph (a) of this section, the Archivist shall publish a notice of this disposal in the FEDERAL REGISTER at least 60 days before the proposed disposal date.

(c) The notice required by paragraph (b) of this section, shall include the following:

(1) A reasonably specific description of the records scheduled for disposal; and

(2) A concise statement of the reason for disposal of the records.

(d) Publication in the FEDERAL REGISTER of the notice required by paragraph (b) of this section shall constitute a final agency action for purposes of review under chapter 7 of title 5 U.S.C. (5 U.S.C. 701–706).

Subpart D—Access to Presidential Records

§ 1270.40 Identification of restricted records.

(a) If a President, prior to the conclusion of his term of office or last consecutive term of office, as the case may be, specifies durations, not to exceed 12 years, for which access to certain information contained in Presidential records shall be restricted, in accordance with 44 U.S.C. 2204, the Archivist or his designee shall identify the Presidential records affected, or any reasonably segregable portion thereof, in consultation with that President or his designated representative(s).

(b) The Archivist shall restrict public access to the information contained in those records identified as affected until—

(1) The date on which the former President waives the restriction on disclosure of the record or information contained within;

(2) The expiration of the period of restriction specified under 44 U.S.C. 2204(a) for the category of information under which a certain record, or a portion thereof, was restricted; or

(3) The Archivist has determined that the former President or an agent of the former President has placed in the public domain through publication a restricted record or a reasonably segregable portion thereof, if this date is earlier than either of the dates specified in paragraph (b)(1) or (2) of this section.

§ 1270.42 Denial of access to public; right to appeal.

(a) Any person denied access to a Presidential record (hereinafter *the requester*) because of a determination that the record or a reasonably segregable portion thereof was (1) properly restricted under 44 U.S.C. 2204(a), and (2) not placed in the public domain by the former President or his agent, may file an administrative appeal with the Assistant Archivist for Presidential Libraries (NL), Washington, DC 20408.

(b) Appeals shall be filed no later than 10 working days after the requester receives written notification that access to Presidential records has been denied.

(c) Appeals shall be in writing and shall set forth the reason(s) why the requester believes access to the records sought should be allowed. The requester shall identify the specific records sought.

(d) Upon receipt of an appeal, the Assistant Archivist for Presidential Libraries shall have 30 working days from the date an appeal is filed to consider the appeal and to respond in writing to the requester. The Assistant Archivist's response shall state whether or not the Presidential records requested are to be released and the basis for this determination. The decision of the Assistant Archivist to withhold release of Presidential records is final and not subject to judicial review.

§ 1270.44 Exceptions to restricted access.

(a) Notwithstanding any restrictions on access imposed pursuant to section 2204 or these regulations, and subject to any rights, defenses, or privileges which the United States or any agency or person may invoke, Presidential records shall be made available in the following instances:

(1) Pursuant to subpoena or other judicial process properly issued by a court of competent jurisdiction for the purposes of any civil or criminal investigation or proceeding;

(2) To an incumbent President if the records sought contain information which is needed for the conduct of current business of his office and is not otherwise available;

(3) To either House of Congress, or, to the extent of matter within its jurisdiction, to a Congressional committee or subcommittee if the records sought contain information which is needed for the conduct of business within its jurisdiction and is not otherwise available.

(b) Requests by an incumbent President, a House of Congress, or a Congressional committee or subcommittee pursuant to paragraph (a) of this section shall be addressed to the Archivist. All requests shall be in writing and, where practicable, identify the records sought with reasonable specificity.

(c) Presidential records of a former President shall be available to the former President or his designated representative upon request.

§ 1270.46 Notice of intent to disclose Presidential records.

(a) The Archivist or his designee shall notify a former President or his designated representative(s) before any Presidential records of his Administration are disclosed.

(b)(1) The notice given by the Archivist or his designee shall:

(i) Be in writing;

(ii) Identify the particular records with reasonable specificity;

(iii) State the reason for the disclosure; and

(iv) Specify the date on which the record will be disclosed.

(2) In the case of records to be disclosed in accordance with § 1270.44, the notice shall also:

(i) Identify the requester and the nature of the request;

(ii) Specify whether the requested records contain materials to which access would otherwise be restricted pursuant to 44 U.S.C. 2204(a) and identify the category of restriction within which the record to be disclosed falls; and

(iii) Specify the date of the request.

(c) If, after receiving the notice required by paragraph (a) of this section, a former President raises rights or privileges which he believes should preclude the disclosure of a Presidential record, and the Archivist nevertheless determines that the record in question should be disclosed, in whole or in part, the Archivist shall notify the former President or his representative of this determination. The notice given by the Archivist or his designee shall:

(1) Be in writing;

(2) State the basis upon which the determination to disclose the record is made; and

(3) Specify the date on which the record will be disclosed.

(d) The Archivist shall not disclose any records covered by any notice required by paragraph (a) or (c) of this section for at least 30 calendar days from receipt of the notice by the former President, unless a shorter time period is required by a demand for Presidential records under § 1270.44.

(e) Copies of all notices provided to former Presidents under this section shall be provided at the same time to the incumbent President.

Subpart E—Presidential Records Compiled for Law Enforcement Purposes

§ 1270.50 Consultation with law enforcement agencies.

(a) For the processing of Presidential records compiled for law enforcement purposes that may be subject to 5 U.S.C. 552(b)(7), the Archivist shall request specific guidance from the appropriate Federal agency on the proper treatment of a record if there is no general guidance applicable, if the record is particularly sensitive, or if

the type of record or information is widespread throughout the files.

(b) When specific agency guidance is requested under paragraph (a) of this section, the Archivist shall notify the appropriate Federal agency of the decision regarding disclosure of the specific documents. Notice shall include the following:

(1) A description of the records in question;

(2) Statements that the records described contain information compiled for law enforcement purposes and may be subject to the exemption provided by 5 U.S.C. 552(b)(7) for records of this type; and,

(3) The name of a contact person at NARA.

(c) Agency guidance under this section is not binding on the Archivist. The final determination on whether Presidential records may be subject to the exemption in 5 U.S.C. 552(b)(7) is the Archivist's responsibility.

SUBCHAPTER F—NIXON PRESIDENTIAL MATERIALS

PART 1275—PRESERVATION AND PROTECTION OF AND ACCESS TO THE PRESIDENTIAL HISTORICAL MATERIALS OF THE NIXON ADMINISTRATION

Sec.
1275.1 Scope of part.

Subpart A—General Provisions

1275.10 Purpose.
1275.12 Application.
1275.14 Legal custody.
1275.16 Definitions.
1275.18 Requests or demands for access.

Subpart B—Preservation and Protection

1275.20 Responsibility.
1275.22 Security.
1275.24 Archival processing.
1275.26 Access procedures.
1275.28 Extraordinary authority during emergencies.

Subpart C—Access to Materials by Former President Nixon, Federal Agencies, and for Use in Any Judicial Proceeding

1275.30 Access by former President Nixon.
1275.32 Access by Federal agencies.
1275.34 Access for use in judicial proceedings.

Subpart D—Access by the Public

1275.40 Scope of subpart.
1275.42 Processing period; notice of proposed opening.
1275.44 Rights and privileges; right to a fair trial.
1275.46 Segregation and review; Senior Archival Panel; Presidential Materials Review Board.
1275.48 Transfer of materials.
1275.50 Restriction of materials related to abuses of governmental power.
1275.52 Restriction of materials of general historical significance unrelated to abuses of governmental power.
1275.54 Periodic review of restrictions.
1275.56 Appeal of restrictions.
1275.58 Deletion of restricted portions.
1275.60 Requests for declassification.
1275.62 Reference room locations, hours, and rules.
1275.64 Reproduction of tape recordings of Presidential conversations.
1275.66 Reproduction and authentication of other materials.
1275.68 Amendment of regulations.
1275.70 Freedom of information requests.

APPENDIX A TO PART 1275—SETTLEMENT AGREEMENT

AUTHORITY: Sec. 102(a) of the National Archives and Records Administration Act of 1984, Pub. L. 98–497; 44 U.S.C. 2104; and secs. 103 and 104 of the Presidential Recordings and Materials Preservation Act 88 Stat. 1695; 44 U.S.C. 2111 note.

SOURCE: 51 FR 7230, Feb. 28, 1986, unless otherwise noted.

§ 1275.1 Scope of part.

This part sets forth policies and procedures concerning the preservation and protection of and access to the tape recordings, papers, documents, memorandums, transcripts, and other objects and materials which constitute the Presidential historical materials of Richard M. Nixon, covering the period beginning January 20, 1969, and ending August 9, 1974.

Subpart A—General Provisions

§ 1275.10 Purpose.

This part 1275 implements the provisions of title I of the Presidential Recordings and Materials Preservation Act (Pub. L. 93–526; 88 Stat. 1695). It prescribes policies and procedures by which the National Archives and Records Administration will preserve, protect, and provide access to the Presidential historical materials of the Nixon Administration.

§ 1275.12 Application.

This part 1275 applies to all of the Presidential historical materials of the Nixon Administration in the custody of the Archivist of the United States pursuant to the provisions of title I of the Presidential Recordings and Materials Preservation Act (Pub. L. 93–526; 88 Stat. 1695).

§ 1275.14 Legal custody.

The Archivist of the United States has or will obtain exclusive legal custody and control of all Presidential historical materials of the Nixon Administration held pursuant to the provisions of title I of the Presidential Recordings and Materials Preservation Act (Pub. L. 93–526; 88 Stat. 1695).

§ 1275.16 Definitions.

For the purposes of this part 1275, the following terms have the meaning ascribed to them in this § 1275.16.

(a) *Presidential historical materials*. The term *Presidential historical materials* (also referred to as *historical materials* and *materials*) shall mean all papers, correspondence, documents, pamphlets, books, photographs, films, motion pictures, sound and video recordings, machine-readable media, plats, maps, models, pictures, works of art, and other objects or materials made or received by former President Richard M. Nixon or by members of his staff in connection with his constitutional or statutory powers or duties as President and retained or appropriate for retention as evidence of or information about these powers or duties. Included in this definition are materials relating to the political activities of former President Nixon or members of his staff, but only when those activities directly relate to or have a direct effect upon the carrying out of constitutional or statutory powers or duties. Excluded from this definition are documentary materials of any type that are determined to be the official records of an agency of the Government; private or personal materials; stocks of publications, processed documents, and stationery; and extra copies of documents produced only for convenience or reference when they are clearly so identified.

(b) *Private or personal materials*. The term *private or personal materials* shall mean those papers and other documentary or commemorative materials in any physical form relating solely to a person's family or other non-governmental activities, including private political associations, and having no connection with his constitutional or statutory powers or duties as President or as a member of the President's staff.

(c) *Abuses of governmental power popularly identifed under the generic term ''Watergate.''* The term *abuses of governmental power popularly identified under the generic term ''Watergate''* (also referred to as *abuses of governmental power*), shall mean those alleged acts, whether or not corroborated by judicial, administrative or legislative proceedings, which allegedly were conducted, directed or approved by Richard M. Nixon, his staff or persons associated with him in his constitutional or statutory functions as President, or as political activities directly relating to or having a direct effect upon those functions, and which—

(1) Were within the purview of the charters of the Senate Select Committee on Presidential Campaign Activities or the Watergate Special Prosecution Force; or

(2) Are circumscribed in the Articles of Impeachment adopted by the House Committee on the Judiciary and reported to the House of Representatives for consideration in House Report No. 93–1305.

(d) *General historical significance*. The term *general historical significance* shall mean having administrative, legal, research or other historical value as evidence of or information about the constitutional or statutory powers or duties of the President, which an archivist has determined is of a quality sufficient to warrant the retention by the United States of materials so designated.

(e) *Archivist*. The term *Archivist* shall mean the Archivist of the United States or his designated agent. The term *archivist* shall mean an employee of the National Archives and Records Administration who, by education or experience, is specially trained in archival science.

(f) *Agency*. The term *agency* shall mean an executive department, military department, independent regulatory or nonregulatory agency, Government corporation, Government-controlled corporation, or other establishment in the executive branch of the Government including the Executive Office of the President. For purposes of § 1275.32 only, the term *agency* shall also include the White House Office.

(g) *Archival processing*. The term *archival processing* may include the following general acts performed by archivists with respect to the Presidential historical materials: Shelving boxes of documents in chronological, alphabetical, numerical or other sequence; surveying and developing a location register and cross-index of the boxes; arranging materials; refoldering and reboxing the documents and affixing labels; producing finding aids such as folder title lists, scope and content notes, biographical data, and series descriptions; rewinding, duplicating and preserving the original tape recordings; enhancing the tape recordings on which the conversations are wholly or partially unintelligible so that extraneous noises may be filtered out; producing general subject matter logs of the tape recordings; reproducing and transcribing tape recordings; reviewing the materials to identify items that appear subject to restriction; identifying items in poor physical condition and assuring their preservation; identifying materials requiring further processing; and preparation for public access of all materials which are not subject to restriction.

(h) *Staff*. The term *staff* shall mean those persons whose salaries were paid fully or partially from appropriations to the White House Office or Domestic Council, or who were detailed on a nonreimbursable basis to the White House Office or Domestic Council from any other Federal activity; or those pesons who otherwise were designated as assistants to the President, in connection with their service in that capacity; or any persons whose files were sent to the White House Central Files Unit or Special Files Unit, for purposes of those files.

(i) *National security classified information*. The term *national security classified information* shall mean any matter which is security classified under existing law, and has been or should be designated as such.

[51 FR 7230, Feb. 28, 1986, as amended at 61 FR 17844, Apr. 23, 1996]

§ 1275.18 Requests or demands for access.

Each agency which receives a request or legal demand for access to Presidential historical materials of the Nixon Administration shall immediately forward the request or demand to the Archivist of the United States, National Archives and Records Administration (NARA), Washington, DC 20408.

Subpart B—Preservation and Protection

§ 1275.20 Responsibility.

The Archivist is responsible for the preservation and protection of the Nixon Presidential historical materials.

[61 FR 17845, Apr. 23, 1996]

§ 1275.22 Security.

The Archivist is responsible for providing adequate security for the Presidential historical materials.

§ 1275.24 Archival processing.

When authorized by the Archivist and until the commencement of archival processing in accordance with subpart D of this part, archivists may process the Presidential historical materials to the extent necessary for protecting and preserving the materials, and for providing authorized access to the materials pursuant to subpart C of this part.

§ 1275.26 Access procedures.

(a) The Archivist will receive and/or prepare appropriate documentation of each access authorized under this part 1275.

(b) Entry to the records storage areas will be provided by the Archivist only to archival, maintenance, security, or other necessary personnel or to Mr. Nixon or his agent. Two persons, at least one of whom represents the Archivist, will be present at all times that records storage areas are occupied.

(c) The Archivist will determine that each individual having access to the Presidental historical materials has a security clearance equivalent to the highest degree of national security classification that may be applicable to any of the material examined.

(d) The Archivist will provide former President Nixon or his designated attorney or agent (hereinafter Mr. Nixon), prior notice of, and allow him to be present during, each search necessary to comply with an authorized access under § 1275.32 or § 1275.34.

(e) Only NARA archivists shall conduct searches necessary to comply with authorized accesses under §§ 1275.32 and 1275.34.

(f) Prior to releasing Presidential historical materials in accordance with an access authorized under § 1275.32 or § 1275.34, the Archivist will give Mr. Nixon notice of the nature and identity of, and at his request allow him access to, those Presidential historical materials which the archivists have determined are covered by the subpoena, or other lawful process, or request. The notice will also inform Mr. Nixon that he may file a claim with the Archivist objecting to the release of all or portions of the described materials within 5 workdays of his receiving the notice described herein. The claim should detail the alleged rights and privileges of Mr. Nixon which would be violated by the release of the materials. The Archivist will refrain from releasing any of the materials to the requester during this period, and while any claim of right or privilege is pending before him, will refrain from releasing the materials subject to the claim.

(g) The Archivist will notify Mr. Nixon in writing of the administrative determination on any claims filed in accordance with paragraph (f) of this section. In the event the determination is wholly or partially adverse to the claim, the Archivist will refrain from releasing the materials to the requester for an additional 5 workdays from Mr. Nixon's receipt of the determination.

(h) Whenever possible, a copy, which shall be certified upon request, instead of the original documentary Presidential historical materials shall be provided to comply with a subpoena or other lawful process or request. Whenever the original documentary material is removed, a certified copy of the material shall be inserted in the proper file until the return of the original.

§ 1275.28 Extraordinary authority during emergencies.

In the event of an emergency that threatens the physical preservation of the Presidential historical materials or their environs, the Archivist will take such steps as may be necessary, including removal of the materials to temporary locations outside the metropolitan area of the District of Columbia, to preserve and protect the materials.

Subpart C—Access to Materials by Former President Nixon, Federal Agencies, and For Use in Any Judicial Proceeding

§ 1275.30 Access by former President Nixon.

In accordance with the provisions of subpart B of this part, former President Richard M. Nixon or his designated agent shall at all times have access to Presidential historical materials in the custody and control of the Archivist.

§ 1275.32 Access by Federal agencies.

In accordance with the provisions of subpart B of this part, any Federal agency or department in the executive branch shall have access for lawful Government use to the Presidential historical materials in the custody and control of the Archivist to the extent necessary for ongoing Government business. The Archivist will only consider written requests from heads of agencies or departments, deputy heads of agencies or departments, or heads of major organizational components or functions within agencies or departments.

§ 1275.34 Access for use in judicial proceedings.

In accordance with the provisions of subpart B of this part, and subject to any rights, defenses, or privileges which the Federal Government or any person may invoke, the Presidential historical materials in the custody and control of the Archivist will be made available for use in any judicial proceeding and are subject to subpoena or other lawful process.

Subpart D—Access by the Public

§ 1275.40 Scope of subpart.

This subpart sets forth policies and procedures concerning public access to the Presidential historical materials of Richard M. Nixon.

§ 1275.42 Processing period; notice of proposed opening.

(a)(1) The archivists will conduct archival processing of those materials other than tape recordings to prepare them for public access. In processing the materials, the archivists will give priority to segregating private or personal materials and transferring them to their proprietary or commemorative owner in accordance with § 1275.48. In conducting such archival processing, the archivists will restrict portions of the materials pursuant to §§ 1275.50 and 1275.52. All materials other than tape recordings to which reference is made in § 1275.64 will be prepared for public access and released subject to restrictions or outstanding claims or petitions seeking such restrictions. The Archivist will open for public access each integral file segment of materials upon completion of archival processing of that segment.

(2) The archivists will conduct archival processing of the tape recordings to prepare them for public access in accordance with the provisions set forth in the Settlement Agreement (see Appendix A to this part). In conducting the archival processing of the tape recordings, the archivists will restrict segments of the tape recordings pursuant to §§ 1275.50 and 1275.52. The tape segments which consist of abuses of governmental power information, as defined in § 1275.16(c), will be given priority processing by the archivists and will be prepared for public access and released following review and resolution of objections from the Nixon estate and other interested parties as set forth in the Settlement Agreement (see Appendix A to this Part). After the tape segments which consist of abuses of governmental power information have been released, the archivists will conduct archival processing of those tape recordings which were taped in the Cabinet Room, as set forth in the Settlement Agreement, Appendix A to this Part. Following release of the Cabinet Room tape recordings, the remaining tape recordings will be prepared for public access and released in five segments in accordance with the schedule set forth in the Settlement Agreement. In addition, NARA will identify and return any additional private or personal segments to the Nixon estate, at approximately the time that NARA proposes each segment for public release.

(b) At least 30 calendar days prior to the opening to public access of any integral file segment of the materials, the Archivist will publish notice in the FEDERAL REGISTER of the proposed opening. The notice will reasonably identify the material to be opened and will include a reference to the right of any interested person to file a claim or petition in accordance with § 1275.44. Copies of the notice will be sent to the incumbent President of the United States or his designated agent and by first-class mail to the last known address of: Mr. Nixon, or his designated agent or heirs; any former staff member reasonably identifiable as the individual responsible for creating or maintaining the file segment proposed to be opened; any individual named in the material which the Archivist may not restrict in accordance with § 1275.50(b) because the material is essential to an understanding of any abuse of governmental power; and any persons named in the materials who are registered with the National Archives and Records Administration in accordance with paragraph (c) of this section.

(c) The Archivist will maintain a registry which shall contain the names and mailing addresses of persons who wish to receive personal notice of the proposed opening of integral file segments of the materials when those segments contain references about them. To be included in the registry, a person must submit his/her name and mailing address to the National Archives and Records Administration (NLN), Washington, DC 20408. Both the envelope and letter should be prominently marked, ''Nixon Materials Registry.'' By submitting his/her name for inclusion in the registry, a person agrees to reimburse the United States for the cost of

first-class postage for each instance of personal notice received.

[51 FR 7230, Feb. 28, 1986, as amended at 61 FR 17845, Apr. 23, 1996]

§ 1275.44 Rights and privileges; right to a fair trial.

(a) Within 30 days following publication of the notice prescribed in § 1275.42(b), any person claiming a legal or constitutional right or privilege which would prevent or limit public access to any of the materials shall notify the Archivist in writing of the claimed right or privilege and the specific materials to which it relates. Unless the claim states that particular materials are private or personal (see paragraph (d) of this section), the Archivist will notify the claimant by certified mail, return receipt requested, of his decision regarding public access to the pertinent materials. If that decision is adverse to the claimant, the Archivist will refrain from providing public access to the pertinent materials for at least 30 calendar days from receipt by the claimant of such notice.

(b) Within 30 days following publication of the notice prescribed in § 1275.42(b), officers of any Federal, State, or local court and other persons who believe that public access to any of the materials may jeopardize an individual's right to a fair and impartial trial should petition the Archivist setting forth the relevant circumstances that warrant withholding specified materials. The Archivist will notify the petitioner by certified mail, return receipt requested, of his decision regarding public access to the pertinent materials. If that decision is adverse to the petitioner, the Archivist will refrain from providing public access to the pertinent materials for at least 30 calendar days from receipt by the petitioner of such notice.

(c) In reaching decisions required by paragraphs (a) and (b) of this section, the Archivist may consult with other appropriate Federal agencies. If these consultations require the transfer of copies of the materials to Federal officials in agencies other than the National Archives and Records Administration, the Archivist will transfer these copies in accordance with the procedures prescribed in §§ 1275.26 and 1275.32.

(d) Within 30 days following publication of notice prescribed in § 1275.42(b), any person claiming that materials proposed for public access are in fact private or personal, as defined in § 1275.16(b), and that he or she is the proprietary or commemorative owner of those materials shall notify the Archivist in writing. The claim shall describe the specific materials to which it refers, and the claimant's basis for concluding that these materials are private or personal. Upon receipt of such a claim, the Archivist will transmit it to the Presidential Materials Review Board for its consideration and determination in accordance with § 1275.46(i). The Archivist will refrain from providing public access to the pertinent materials or from returning them to the claimant for at least 30 calendar days from receipt by the claimant or any intervening parties of the Board's determination.

(e)(1) In place of the right to make all other objections with respect to the tape segments that NARA has designated as abuses of governmental power materials, the Nixon estate may object to their release only on the ground that such designation by NARA is clearly inconsistent with the term ''abuses of governmental power'' as used in § 104(a)(1) of the Presidential Recordings and Materials Preservation Act (PRMPA) and defined in § 1275.16(c), as qualified by § 1275.50(b). Any such objection may not be based on isolated instances of alleged failure by NARA to apply the appropriate review standard, but only on a pattern of misapplication of the requirements of the PRMPA and its implementing regulations. Further, any such objection must be accompanied by specific examples of alleged review errors and contain sufficient information to enable the review panel of three Presidential Library archivists appointed by the Archivist, as described in the Settlement Agreement, Appendix A to this Part, to locate those examples readily.

(2) If an objection is made by the Nixon estate to the abuses of governmental power tape segments, the matter shall be immediately referred to a

panel of three Presidential Library archivists appointed by the Archivist as set forth in the Settlement Agreement, Appendix A to this Part. The decision of the panel shall be either that the Nixon estate's objection is sustained or that it is rejected. The decision shall include a brief statement of the panel's reasons, but it need not include an item-by-item determination. In deciding whether the designation by NARA of the material proposed to be released is clearly inconsistent with the definition of ''abuses of governmental power'', the panel shall consider whether the release would seriously injure legitimate interests of identifiable individuals, whether the errors suggest a pattern of misinterpretation, and any other factor that bears on the issue of whether NARA's designation of material as relating to ''abuses of governmental power'' was reasonable, considered as a whole. The panel's decision shall be final and binding on all parties to the *Kutler* litigation, and no party may exercise any right to appeal to any person, board, or court that might otherwise be available.

(3) The Nixon estate may, at any time, elect to use the procedures outlined in paragraphs (e)(1) and (e)(2) of this section for the tape recordings other than the abuses of governmental power segments, except that the standard under which objections shall be made by the Nixon estate, and under which the review panel shall decide their merits, is whether the release taken as a whole is plainly inconsistent with the requirements of the Presidential Recordings and Materials Preservation Act of 1974 and these regulations. If the Nixon estate elects to use the procedures in paragraph 1 of the Settlement Agreement (Appendix A to this Part) in place of the provisions in paragraphs 4 (b) and (d) and 5(c) of the Settlement Agreement for a tape segment, the estate cannot subsequently revert back to the formal objection process set forth in this section for that tape segment.

[51 FR 7230, Feb. 28, 1986; 51 FR 8671, Mar. 13, 1986, as amended at 61 FR 17845, Apr. 23, 1996]

§ 1275.46 Segregation and review; Senior Archival Panel; Presidential Materials Review Board.

(a) During the processing period described in § 1275.42(a), the Archivist will assign archivists to segregate private or personal materials, as defined in § 1275.16(b). The archivists shall have sole responsibility for the initial review and determination of private or personal materials. At all times when the archivists or other authorized officials have access to the materials in accordance with these regulations, they shall take all reasonable steps to minimize the degree of intrusion into private or personal materials. Except as provided in these regulations, the archivists or other authorized officials shall not disclose to any person private or personal or otherwise restricted information learned as a result of their activities under these regulations.

(b) During the processing period described in § 1275.42(a), the Archivist will assign archivists to segregate materials neither relating to abuses of governmental power, as defined in § 1275.16(c), nor otherwise having general historical significance, as defined in § 1275.16(d). The archivists shall have sole responsibility for the initial review and determination of those materials which are not related to abuses of governmental power and do not otherwise have general historical significance.

(c) During the processing period described in § 1275.42(a), the Archivist will assign archivists to segregate materials subject to restriction, as prescribed in §§ 1275.50 and 1275.52. The archivists shall have sole responsibility for the initial review and determination of materials that should be restricted. The archivists shall insert a notification of withdrawal at the front of the file folder or container affected by the removal of restricted material. The notification shall include a brief description of the restricted material and the basis for the restriction as prescribed in §§ 1275.50 and 1275.52.

(d) If the archivists are unable to make a determination required in paragraphs (a), (b), or (c) of this section, or if the archivists conclude that

the required determination raises significant issues involving interpretation of these regulations or will have far-reaching precedential value, the archivists shall submit the pertinent materials, or representative examples of them, to a panel of senior archivists selected by the Archivist. The Panel shall then have the sole responsibility for the initial determination required in paragraphs (a), (b), or (c) of this section.

(e) If the Senior Archival Panel is unable to make a determination required in paragraph (d) of this section, or if the panel concludes that the required determination raises significant issues involving interpretation of these regulations or will have far-reaching precedential value, the Panel shall certify the matter and submit the pertinent materials, or representative examples of them, to the Presidential Materials Review Board.

(f) The Presidential Materials Review Board (Board) shall consist of the Archivist, who shall serve as Chairman, and the following additional members:

(1) The Assistant Archivist for the Office of the National Archives;

(2) The Assistant Archivist for the Office of the Presidential Libraries;

(3) The Director of the Legal Counsel Staff of the National Archives and Records Administration; and

(4) The Historian of a Federal agency who shall be selected by the Archivist in his capacity as Chairman.

The Board shall meet at the call of the Chairman. Three members of the Board shall constitute a quorum for the conduct of the Board's business, although each member of the Board may participate in all of the Board's decisions. Members of the Board may be represented by their delegates on those occasions when they are unable to attend the meetings of the Board. The Board may consult with officials of interested Federal agencies in formulating its decisions. To the extent these consultations require the transfer of copies of materials to Federal officials outside the National Archives and Records Administration, the Board shall comply with the requirements of §§ 1275.26 and 1275.32.

(g) When the matter certified to the Board by the Senior Archival Panel involves a determination required in paragraphs (a) or (b) of this section, the Board shall prepare a final written decision, together with dissenting and concurring opinions, of the proper categorization and disposition of the pertinent materials. The Board's decision will be the final administrative determination.

(h) When the matter certified to the Board by the Senior Archival Panel involves a determination required in paragraph (c) of this section, the Board shall recommend an initial determination to the Senior Archival Panel, which shall retain the sole responsibility for the initial determination.

(i) When the Board considers a matter referred to it by the Archivist as provided in § 1275.44(d), it shall follow these procedures:

(1) The Board shall notify the claimant of its consideration of the claim, and invite the claimant to supplement at his discretion the basis for the claim.

(2) The Board will publish notice in the FEDERAL REGISTER, advising the public of its consideration of the claim, and describing the materials in question as fully as reasonably possible without disclosing arguably private or personal information. The notice will further advise that any member of the public may petition the Board within 15 calendar days of the publication of notice, setting forth the intervenor's views concerning the public or private nature of the materials.

(3) The Board shall take into account the positions maintained by the claimant and any intervenors in reaching its decision. The Board shall issue its decision, including dissenting and concurring opinions, no sooner than 20 days nor later than 60 days from the publication of notice in the FEDERAL REGISTER provided in paragraph (h)(2), of this section. The Board's decision shall be the final administrative determination. The Archivist will notify the claimant and any intervenors of the Board's decision by certified mail, return receipt requested, and shall refrain from acting upon that decision for 30 calendar days as provided in § 1275.44(d).

[51 FR 7230, Feb. 28, 1986, as amended at 61 FR 17845, Apr. 23, 1996]

§ 1275.48 Transfer of materials.

(a) The Archivist will transfer sole custody and use of those materials determined to be private or personal, or to be neither related to abuses of governmental power nor otherwise of general historical significance, to former President Nixon's estate, or, when appropriate and after notifying the Nixon estate, to the former staff member having primary proprietary or commemorative interest in the materials. Such materials to be transferred include all segments of the original tape recordings that have been or will be identified as private or personal.

(b) Materials determined to be neither related to abuses of governmental power nor otherwise of general historical significance, and transferred pursuant to paragraph (a) of this section, shall upon such transfer no longer be deemed Presidential historical materials as defined in § 1275.16(a).

[51 FR 7230, Feb. 28, 1986, as amended at 61 FR 17845, Apr. 23, 1996; 64 FR 56678, Oct. 21, 1999]

§ 1275.50 Restriction of materials related to abuses of governmental power.

(a) The Archivist will restrict access to materials determined during the processing period to relate to abuses of governmental power, as defined in § 1275.16(c), when:

(1) The Archivist, in accordance with § 1275.44, is in the process of reviewing or has determined the validity of a claim by any person of a legal or constitutional right or privilege; or

(2) The Archivist, in accordance with § 1275.44, is in the process of reviewing or has determined the validity of a petition by any person of the need to protect an individual's right to a fair and impartial trial; or

(3) The release of the materials would violate a Federal statute; or

(4) The materials are authorized under criteria established by Executive order to be kept secret in the interest of national defense or foreign policy, provided that any question as to whether materials are in fact properly classified or are properly subject to classification shall be resolved in accordance with the applicable Executive order or as otherwise provided by law. However, the Archivist may waive this restriction when:

(i)(A) The requester is engaged in a historical research project; or

(B) The requester is a former Federal official who had been appointed by the President to a policymaking position and who seeks access only to those classified materials which he originated, reviewed, signed or received while in public office; and

(ii) The requester has a security clearance equivalent to the highest degree of national security classification that may be applicable to any of the materials to be examined; and

(iii) The Archivist has determined that the heads of agencies having subject matter interest in the material do not object to the granting of access to the materials; and

(iv) The requester has signed a statement, which declares that the requester will not publish, disclose, or otherwise compromise the classified material to be examined and that the requester has been made aware of Federal criminal statutes which prohibit the compromise or disclosure of this information.

(b) The Archivist will restrict access to any portion of materials determined to relate to abuses of governmental power when the release of those portions would constitute a clearly unwarranted invasion of personal privacy or constitute libel of a living person: *Provided,* That if material related to an abuse of governmental power refers to, involves or incorporates such personal information, the Archivist will make available such personal information, or portions thereof, if such personal information, or portions thereof, is essential to an understanding of the abuses of governmental power.

§ 1275.52 Restriction of materials of general historical significance unrelated to abuses of governmental power.

(a) The Archivist will restrict access to materials determined during the processing period to be of general historical significance, but not related to abuses of governmental power, under one or more of the circumstances specified in § 1275.50(a).

(b) The Archivist will restrict access to materials of general historical significance, but not related to abuses of governmental power, when the release of these materials would:

(1) Disclose trade secrets and commercial or financial information obtained from a person and privileged or confidential; or

(2) Constitute a clearly unwarranted invasion of personal privacy or constitute libel of a living person; or

(3) Disclose investigatory materials compiled for law enforcement purposes, but only when the disclosure of such records would:

(i) Interfere with enforcement proceedings;

(ii) Deprive a person of a right to a fair trial or an impartial adjudication;

(iii) Constitute an unwarranted invasion of personal privacy;

(iv) Disclose the identity of a confidential source, and in the case of a record compiled by a criminal law enforcement authority in the course of a criminal investigation or by an agency conducting a lawful national security intelligence investigation, confidential information furnished only by the confidential source;

(v) Disclose investigative techniques and procedures; or

(vi) Endanger the life or physical safety of law enforcement personnel.

§ 1275.54 Periodic review of restrictions.

The Archivist periodically will assign archivists to review materials placed under restriction by § 1275.50 or § 1275.52 and to make available for public access those materials which, with the passage of time or other circumstances, no longer require restriction. If the archivists are unable to determine whether certain materials should remain restricted, the archivists shall submit the pertinent materials, or representative examples of them, to the Senior Archival Panel described in § 1275.44(d), which shall then have the responsibility for determining if the materials should remain restricted. The Senior Archival Panel may seek the recommendations of the Presidential Materials Review Board, in the manner prescribed in paragraph (e) and (h) of § 1275.46, in making its determination. Before opening previously restricted materials, the Archivist will comply with the notice requirements of § 1275.42(b).

[51 FR 7230, Feb. 28, 1986; 51 FR 8671, Mar. 13, 1986]

§ 1275.56 Appeal of restrictions.

Upon petition of any researcher who claims in writing to the Archivist that the restriction of specified materials is inappropriate and should be removed, the archivists shall submit the pertinent materials, or representative examples of them, to the Presidential Materials Review Board described in § 1275.46(f). The Board shall review the restricted materials, and consult with interested Federal agencies as necessary. To the extent these consultations require the transfer of copies of materials to Federal officials outside the National Archives and Records Administration, the Board shall comply with the requirements of §§ 1275.26 and 1275.32. As necessary and practicable, the Board shall also seek the views of any person, including former President Nixon, whose rights or privileges might be adversely affected by a decision to open the materials. The Board shall prepare a final written decision, including dissenting and concurring opinions, as to the continued restriction of all or part of the pertinent materials. The Board's decision shall be the final administrative determination. The Archivist will notify the petitioner and other interested persons of the final administrative determination within 60 calendar days following receipt of such petition. If the Board's decision is to open previously restricted materials, the Archivist will comply with the notice requirements of § 1275.42(b).

[51 FR 7230, Feb. 28, 1986, as amended at 61 FR 17846, Apr. 23, 1996]

§ 1275.58 Deletion of restricted portions.

The Archivist will provide a requester any reasonably segregable portions of otherwise restricted materials after the deletion of the portions which are restricted under this § 1275.50 or § 1275.52.

§ 1275.60 Requests for declassification.

Challenges to the classification and requests for the declassification of national security classified materials shall be governed by the provisions of 36 CFR part 1254 of this chapter, as that may be amended from time to time.

§ 1275.62 Reference room locations, hours, and rules.

The Archivist shall, from time to time, separately prescribe the precise location or locations where the materials shall be available for public reference, and the hours of operation and rules governing the conduct of researchers using such facilities. This information may be obtained by writing to: Office of Presidential Libraries (NL), The National Archives, Washington, DC 20408.

§ 1275.64 Reproduction of tape recordings of Presidential conversations.

(a) To ensure the preservation of original tape recordings of conversations which were recorded or caused to be recorded by any officer or employee of the Federal Government and which:

(1) Involve former President Richard M. Nixon or other individuals who, at the time of the conversation, were employed by the Federal Government; and

(2) Were recorded in the White House or in the office of the President in the Executive Office Buildings located in Washington, DC; Camp David, MD; Key Biscayne, FL; or San Clemente, CA; and

(3) Were recorded during the period beginning January 20, 1969, and ending August 9, 1974, the Archivist will produce duplicate copies of such tape recordings in his custody for public and official reference use. The original tape recordings shall not be available for public access.

(b) Since the original tape recordings may contain information which is subject to restriction in accordance with § 1275.50 or § 1275.52, the archivists shall review the tapes and delete restricted portions from copies for public and official reference use.

(c) Researchers may listen to reference copies of the tape recordings described in paragraph (a) of this section in a National Archives building in the Washington, DC area and at other reference locations established by the Archivist in accordance with § 1275.62.

(d) The reproduction for members of the public of the reference copies of the available tape recordings described in paragraph (a) of this section will be permitted as follows: Copies of tape recordings will be made available following the public release of the last of the tape segments contemplated in § 1275.42(a). If the releases contemplated in § 1275.42(a) are not completed by December 31, 1999, NARA will, beginning January 1, 2000, allow members of the public to obtain copies only of the abuses of governmental power tapes, together with any other tapes publicly released as of the effective date of the Settlement Agreement. If the releases contemplated in § 1275.42(a) are not completed by December 31, 2002, NARA will, beginning January 1, 2003, allow members of the public to obtain copies of all tapes that have been made available to the public by that date and tapes that subsequently become available as they are released. Such copying will be controlled by NARA or its designated contractor. The fees for the reproduction of the tape recordings under this section shall be those prescribed in the schedule set forth in part 1258 of this chapter or pertinent successor regulation, as that schedule is amended from time to time.

(e) The Archivist shall produce and maintain a master preservation copy of the original tape recordings for preservation purposes. The Archivist shall ensure that the master preservation copy, like the portions of the original tape recordings retained by the Archivist, does not contain those segments of the tape recordings which have been identified as private or personal and which have been transferred to the Nixon estate in accordance with § 1275.48.

[51 FR 7230, Feb. 28, 1986, as amended at 61 FR 17846, Apr. 23, 1996; 64 FR 56678, Oct. 21, 1999]

§ 1275.66 Reproduction and authentication of other materials.

(a) Copying of materials other than tape recordings described in § 1275.64 may be done by NARA, by a contractor designated by NARA, or by researchers

using self-service copiers. Such self-service copying shall be done in accordance with the NARA policy on self-service copying set forth at 36 CFR 1254.71, to ensure that such copying will not harm the materials or disrupt reference activities.

(b) The Archivist may authenticate and attest copies of materials when necessary for the purpose of the research.

(c) The fees for reproduction and authentication of materials under this section shall be those prescribed in the schedule set forth in part 1258 of this chapter or pertinent successor regulation, as that schedule is amended from time to time.

[51 FR 7230, Feb. 28, 1986, as amended at 61 FR 17846, Apr. 23, 1996]

§ 1275.68 Amendment of regulations.

The Archivist may from time to time amend the regulations of this subpart D in accordance with the applicable law concerning such amendments.

§ 1275.70 Freedom of information requests.

(a) The Archivist will process Freedom of Information Act requests for access to only those materials within the Presidential historical materials which are identifiable by an archivist as records of an agency as defined in § 1275.16(f). The Archivist will process these requests in accordance with the Freedom of Information regulations set forth in § 1254.30 of this chapter or pertinent successor regulations.

(b) In order to allow NARA archivists to devote as much time and effort as possible to the processing of materials for general public access, the Archivist will not process those Freedom of Information requests where the requester can reasonably obtain the same materials through a request directed to an agency (as defined in § 1275.16(f)), unless the requester demonstrates that he or she has unsuccessfully sought access from that agency or its successor in law or function.

[51 FR 7230, Feb. 28, 1986, as amended at 61 FR 17846, Apr. 23, 1996]

APPENDIX A TO PART 1275—SETTLEMENT AGREEMENT

Settlement Agreement filed April 12, 1996, in *Stanley I. Kutler and Public Citizen* v. *John W. Carlin, Archivist of the United States, and William E. Griffin and John H. Taylor, Co-executors of Richard M. Nixon's Estate*, Civil Action No. 92–0662–NHJ (D.D.C.) (Johnson, J.)

Settlement Agreement

This Settlement Agreement (''Agreement'') is made by and entered into among plaintiffs Stanley I. Kutler and Public Citizen; defendant/cross-claim defendant John W. Carlin, in his official capacity as Archivist of the United States; and defendant-intervenors/cross-claimants John H. Taylor and William E. Griffin, co-executors of the estate of Richard M. Nixon (''the Nixon estate''), in the above-entitled action by and through the parties' undersigned attorneys.

It is hereby agreed, by and among the parties, appearing through their undersigned attorneys, that this action is partially settled on the following terms:

TERMS OF AGREEMENT

1(a). As soon as practicable, the National Archives and Records Administration (''the Archives'') will publicly release the segments of tape recordings made during the Presidency of Richard M. Nixon (''tape recordings'' or ''tapes'') identified by the Archives as relating to ''abuses of governmental power,'' as defined by 36 C.F.R. Part 1275, along with the corresponding portions of the tape log and any other finding aid. The date of that release, which is expected to be on or about November 15, 1996, shall be determined in the following manner.

(b). No later than April 15, 1996, the Archives shall deliver to an agent of the Nixon estate a copy of the approximately 201 hours of abuses of governmental power tape segments that it proposes to release, together with the corresponding portions of the tape log and any other finding aid, for review by the Nixon estate to determine whether it intends to object to the release. The Archives agrees to provide a period of orientation to the designated Nixon estate agent with respect to the review of the abuses of governmental power tape segments and to be available to respond to questions thereafter.

(c). In place of the right to make all other objections with respect to the tape recordings that the Archives has designated as abuses of governmental power materials, the Nixon estate agrees that it may object to their release only on the ground that such designation by the Archives is clearly inconsistent with the term ''abuses of governmental power'' as used in section 104(a)(1) of the Presidential Recordings and Materials Preservation Act of 1974 (''the Act''), 44

U.S.C. §2111 note, and defined in 36 C.F.R. 1275.16(c), as qualified by 36 C.F.R. 1275.50(b). Any such objection shall be in writing and may not be based on isolated instances of alleged failure by the Archives to apply the appropriate review standard, but only on a pattern of misapplication of the requirements of the Act and its implementing regulations. Further, any such objection must be accompanied by specific examples of alleged review errors and contain sufficient information to enable the review panel described in subparagraph 1(e) below to locate those examples readily. Nothing in this paragraph shall preclude the Nixon estate and the Archives from having informal discussions regarding the appropriate treatment of any of the abuses of governmental power tape segments.

(d). The Nixon estate shall have until October 1, 1996, to submit any objection in accordance with subparagraph 1(c) above. If no such objection is filed, the Archives shall proceed to issue a notice of proposed release pursuant to 36 C.F.R. 1275.42 as soon as possible, but no later than October 15, 1996.

(e). If an objection is made, the matter shall be immediately referred to a panel of the following three Presidential Library archivists: David Alsobrook, Frances Seeber, and Claudia Anderson. If any of these three persons is unable to serve, the Archivist shall appoint a substitute who is acceptable to the other parties.

(f). The panel shall have such access to the tapes as it deems necessary to make its decision. The decision of the panel shall be either that the Nixon estate's objection is sustained or that it is rejected. The decision shall include a brief statement of the panel's reasons, but it need not include an item-by-item determination. In deciding whether the designation by the Archives of the material proposed to be released is clearly inconsistent with the definition of ''abuses of governmental power,'' the panel shall consider whether the release would seriously injure legitimate interests of identifiable individuals, whether the errors suggest a pattern of misinterpretation, and any other factor that bears on the issue of whether the Archives' designation of material as relating to abuses of governmental power was reasonable, considered as a whole. The decision of the panel shall be made within sixty (60) days of the date of the objection. However, if the panel determines that exceptional circumstances interfere with its ability to meet this deadline, the panel shall have up to an additional sixty (60) days to make its decision. The Archives shall notify the other parties of the need for an extension and briefly describe the reasons therefor. The panel's decision shall be final and binding on all parties, and no party may exercise any right to appeal to any person, board, or court that might otherwise be available. Nothing contained in this Agreement shall preclude the panel from advising the Archives of any particular processing errors that it believes may have been made, but the Archivist shall make the final determination as to whether to accept such advice.

(g). If the objection of the Nixon estate is sustained, the Archives shall re-review the tapes sufficiently to address the concerns raised by whatever aspect of the objection is sustained. At the conclusion of such re-review, the same process of review, first by the Nixon estate and then by the panel in the event of further objection, shall be repeated for those tape segments concerning the subject matter of the sustained objection prior to any release of tape recordings designated as relating to abuses of governmental power.

(h). The Nixon estate agrees to inform the Archives and plaintiffs whether it intends to file objections as soon as it has made its decision. If there is an objection by the Nixon estate and it is overruled, the FEDERAL REGISTER notice shall be published within ten (10) days of the date of the panel's decision.

(i). If, following the FEDERAL REGISTER notice, no objection by other individuals to a release is received within the time provided by law, the Archives shall release the tape recordings within ten (10) days after such time has expired. If objections are received, they shall be promptly considered by the Archives and shall be decided as soon thereafter as practical. Any materials as to which an objection to release has been timely filed shall not be released until such objection has been resolved pursuant to 36 C.F.R. 1275.44. All materials not objected to shall be released no later than thirty (30) days after the time for objections has expired, provided that the Archives may withhold any additional conversation to which no objection has been made, pending final resolution of an objection to another conversation, if (i) such additional conversation is in close proximity on the tapes to the objected-to conversation and it would be burdensome for the Archives to separate out the releasable and objected-to portions, or (ii) the subjects of the releasable and the objected-to conversations are closely related to one another and the Archives determines that it might be misleading or might unfairly prejudice a living individual to release only one conversation. Any release under this Agreement shall include the corresponding portions of the tape log and any other finding aid.

(j). The Archives shall send to plaintiff Kutler, to arrive no later than the day that the release of the tapes occurs, a copy of the portions of the tape log and any other finding aid that correspond to the tapes being released. The Archives shall also make suitable arrangements for plaintiff Kutler to listen to such tapes on the date of their release, and/or on such other subsequent business days as plaintiff Kutler shall designate.

2(a). Although the Agreement provides that the Archives will identify and return to the Nixon estate a copy of any private or personal materials identified on the tapes, the parties have been unable to reach agreement regarding the Archivist's retention and maintenance of the original tape recordings in their entirety, including those segments deemed to be private or personal, along with a master preservation copy. The government's position is that it is complying with the Act by retaining the original tapes and a master preservation copy, including those portions containing private or personal conversations. The Nixon estate's position, with which plaintiffs agree, is that the family has statutory, constitutional, and other rights that prevent the Archives from retaining private or personal materials, on both the original tapes and all copies.

(b). The parties have agreed to litigate the issue described in subparagraph 2(a) above, including the validity of 36 C.F.R. 1275.48(a) and 1275.64(e) as proposed for amendment. The parties further agree that the Court shall retain jurisdiction of that issue, as provided in paragraph 14 below, and that the right to litigate this issue includes the right to seek review in the United States Court of Appeals for the District of Columbia Circuit and the United States Supreme Court. If there is litigation between the Nixon estate and the Archivist over the issue described in subparagraph 2(a) above, the plaintiffs shall support the Nixon estate in any such litigation by filing a brief supporting the estate's position in District Court. The parties agree to make all reasonable efforts to expedite resolution of this issue.

(c). This Agreement and all discussions, negotiations and exchanges of information leading to it shall be entirely without prejudice to any positions the parties may take in the event of such litigation. Nothing in this Agreement, in any discussions leading to it, or in any information or materials exchanged by the parties as part of the mediation may be relied on or disclosed by any party to support or rebut the position of any party with respect to the treatment of private or personal materials on the original tapes. Nothing in this subparagraph prevents any party from expressing its understanding as to the meaning and effect of the legal position of another party.

3. The Archives will provide to the Nixon estate any additional private or personal materials at approximately the time that the Archives proposes each segment identified in paragraphs 4 and 5 below for public release. Any additional copies of that material (other than on a master preservation copy, the status of which will be determined in accordance with the resolution of the issue as described in subparagraph 2(a) above), will be destroyed by appropriate method, with appropriate means of verification.

4(a). The second group of tapes to be processed for release is the approximately 278 hours recorded in the Cabinet Room. The projected date for publishing a notice of proposed opening of tapes in that group is August 1, 1997. The Archives will make the Cabinet Room tapes proposed for release available to the Nixon estate in no fewer than four (4) segments. The process by which those tapes will be reviewed by the Nixon estate, and the objections handled by the Archives, is set forth in the following subparagraphs of this paragraph 4.

(b). The Nixon estate agrees to review each segment as it is received and promptly to call to the attention of the Archives any concerns that it may have. The Archives and the Nixon estate agree to attempt to work out their differences informally in order to minimize any objections to a proposed release. To facilitate informal consultation between the Nixon estate and the Archives concerning the tape review, the Archivist shall designate a panel member identified in subparagraph 1(e) above who will serve as a contact with the Nixon estate and assure access to information relating to Presidential libraries practices and procedures that may arise in the course of the tape review. The designated individual will be responsible for assuring that the Nixon estate has access to the appropriate person to answer its concerns. The Nixon estate may communicate with the designated individual orally or in writing. If the Archives agrees with the Nixon estate that any portion of a segment that has been sent to the Nixon estate as a proposed release should not be released, the Archives shall assure that there is appropriate documentation to reflect that change.

(c). The Nixon estate will have a period of at least six (6) months in which to review all of the Cabinet Room tapes, beginning on the date the Archives makes the first installment of such tapes available to the estate for review (but in no event will the six (6) months begin earlier than November 15, 1996). During the review of the Cabinet Room tapes, the Nixon estate will employ an agent or agents who will spend an average of at least thirty two (32) hours a week (total) in actual review of the tapes. The Nixon estate may request from the Archives an extension of the six-month review period, which the Archives shall grant if good cause is shown.

(d). If, during its review, the Nixon estate becomes aware that there are materials proposed for release that it believes should not be heard even by individuals on the registry list, it will promptly advise the Archives of any such materials so that they can be reviewed and/or segregated by the Archives before any other individual is permitted to listen to them. The Nixon estate will cooperate with the Archives so that the required FEDERAL REGISTER notice is published as soon as possible, but in no event shall such notice be

provided later than ten (10) days after the time the Nixon estate completes its review. Final objections from the Nixon estate to the release of portions of the tapes shall be filed in accordance with 36 C.F.R. Part 1275 no later than the date for filing objections by other persons. Thereafter, subject to paragraph 7 below, the provisions of subparagraphs 1(i) and 1(j) above will apply.

5(a). The remaining tapes, consisting of approximately 2338 hours, shall be processed for release in five (5) segments. Because the precise number of hours of tapes for each month cannot readily be determined, the parties have agreed to divide the releases into the segments set forth below. The Archives will begin processing (which includes, but is not limited to, tape review, preparing tapes for declassification review, tape editing and production of finding aids) each segment before processing of the preceding segment is concluded. Processing of the tapes in each segment is projected to take from about fifteen (15) to about twenty three (23) months. The approximate number of hours of tapes to be reviewed in each segment is set forth in parentheses in the following listing of the segments. The projected number of months between the completion of the Archives' processing of the immediately preceding segment and the completion of the Archives' processing of each listed segment is set forth in brackets.

1. February 1971–July 1971 (437 hours) [8 months]
2. August 1971–December 1971 (405 hours) [7 months]
3. January 1972–June 1972 (440 hours) [7 months]
4. July 1972–October 1972 (410 hours) [6 months]
5. November 1972–July 1973 (646 hours) [10 months]

(b). The time estimates in this Agreement are not enforceable as such, but the parties agree to have the Court retain jurisdiction to consider requests that it enter a binding order setting a schedule for the Archives to complete the processing of the tapes. No party may seek such an order unless that party first provides twenty (20) days' written notice to the other parties of that party's intention to seek such an order. Further, no party may seek such an order except on the ground that the Archives has unreasonably failed to meet the estimates contained herein by a substantial amount. The type of proof that will demonstrate reasonableness on the part of the Archives in this regard may include, but will not necessarily be limited to, a showing that the Archives is reasonably allocating its resources among its various programs and activities in the event that it experiences a shortage of resources, including any occasioned by court order.

(c). Portions of each segment processed by the Archives shall be provided to the Nixon estate when the processing of each month of tape recorded material is completed, unless there are a very few hours for two (2) or more months, which may then be combined into a single unit. During its review of the chronological tape segments, the Nixon estate will employ an agent or agents who will spend an average of at least thirty two (32) hours a week (total) in actual review of the tapes, forty eight (48) weeks of the year. As its review of the tapes proceeds, the Nixon estate shall provide a written report of its progress to the Archives and the plaintiffs on a bimonthly basis. The report shall include the number of hours worked in each week, the number of hours of tapes reviewed in each week, and the Nixon estate's projected completion date for review of the segment currently under review. The provisions of subparagraphs 4(b) and 4(d) above shall apply to the review, objections, and releases with respect to the chronological tape segments, subject to paragraph 7 below.

(d). If one of the other parties to this Agreement determines that the Nixon estate's review is not being conducted diligently or in good faith, or that the estate's estimated completion date(s) of one or more segments is unreasonable, that party may petition the Archivist to establish an earlier date(s) for the completion of the review of that segment and/or of future segments. Any such date(s) established by the Archivist shall provide the Nixon estate with a reasonable opportunity to protect and assert its interests without unduly delaying the release of the tapes, and shall be based upon consideration of the progress of the Archives' review and its scheduled completion date(s); the progress to date of the estate's review; and the time reasonably necessary to complete the estate's review and to formulate and present any objections. The Archives may also propose earlier dates for the completion of the review by the Nixon estate on the basis provided for in this subparagraph. If a proposal for an earlier date is made, the Nixon estate will have a reasonable opportunity to respond.

6. Once the Archives has completed processing the approximately 2338 hours of tapes discussed in paragraph 5 above, and has made corresponding releases, the Archives shall identify any additional copies of partial tape segments in its possession. If the Archives determines that some or all of such additional partial tape segments are duplicative of any tape recordings that it has already processed, the Archives may dispose of the duplicative tape segments, following notification to the parties, subject to paragraph 3 above. To the extent that such partial tape segments are not duplicative of the tape recordings already processed, the Archives shall promptly process such non-duplicative

portions and shall treat any portions determined to be private or personal consistently with the resolution of the issue to be litigated as described in paragraph 2 above.

7(a). After completion of the procedures described in paragraph 4 above, the Cabinet Room tapes that are found to be releasable under paragraph 4 above may be released if either there has been a final decision by the district court on the issue to be litigated as described in subparagraph 2(a) above, or the release is scheduled after April 1, 1998, whichever of these two events happens sooner.

(b). After completion of the procedures described in paragraph 5 above, the tapes described in paragraph 5(a) above that are found to be releasable may be released if either there has been a final judgment by the district court, which is not subject to further review by appeal or certiorari, with regard to the issue to be litigated as described in subparagraph 2(a) above, or there has been a final decision by the United States Court of Appeals for the District of Columbia Circuit on this issue, or the release is scheduled to take place after November 1, 1999, whichever of these three events happens sooner.

(c). As used in subparagraphs 7(a) and (b) above, the term ''final decision'' means a decision not subject to reconsideration under Rule 59 of the Federal Rules of Civil Procedure, or Rules 35 or 40 of the Federal Rules of Appellate Procedure, respectively.

8. The Nixon estate may, at any time, elect to use the procedures in paragraph 1 above with respect to any tape segment in place of the provisions of paragraphs 4(b) and (d) and 5(c) above, with the following substitution: The standard under which objections shall be made, and under which the panel shall decide their merits, is whether the release taken as a whole is plainly inconsistent with the requirements of the Act and its implementing regulations. Provided, however, that once the Nixon estate elects to use the procedures in paragraph 1 above in place of the provisions in paragraphs 4(b) and (d) and 5(c) above, it cannot subsequently revert back to the formal objection process set forth in 36 C.F.R. Part 1275 for that tape segment.

9. Within thirty (30) days of the Court's entry of an order as described in paragraph 14 below, the Archivist shall designate a particular person who shall be responsible for responding to reasonable inquiries from the plaintiffs on the status of the releases and objections. Such designation may be changed at any time at the Archivist's discretion by a notice to plaintiffs through their counsel.

10. If the Archives appoints a Senior Archival Panel as defined in 36 C.F.R. 1275.46(d) and (e), no party to the Agreement may object to the appointment of such a panel on the ground that the suggestion to appoint such a panel was originated by an individual other than the processing archivists assigned to the Archives' Nixon Presidential Materials Staff.

11. The Archives will allow members of the public to obtain copies of publicly accessible portions of the tapes after the releases described in paragraph 5 above, are completed; provided, however, that if the releases described in paragraph 5 above are not completed by December 31, 1999, the Archives will allow members of the public to obtain copies only of the abuses of governmental power tapes, together with any other tapes publicly released as of the date of the filing of this Agreement with the Court, beginning January 1, 2000. Further provided, that if the releases described in paragraph 5 above are not completed by December 31, 2002, the Archives will, beginning January 1, 2003, allow members of the public to obtain copies of all tapes that have been made available to the public by that date and tapes that subsequently become available, as they are released.

12(a). Promptly after the Court enters the Order provided for in paragraph 14 below, plaintiff Kutler will withdraw his request under the Freedom of Information Act, 5 U.S.C. 552, for any and all tape logs and other finding aids, which is pending in *Kutler* v. *Carlin, et al.*, Civ. A. No. 92–0661–NHJ (D.D.C.). In all other respects, plaintiff Kutler's request in that action shall be unaffected by this Agreement.

(b). Nothing in this Agreement shall affect the processing by the Archives of any dictabelts, which are a collection of recordings of former President Nixon and other White House staff members dictating memoranda, correspondence and speech drafts, that are included in the materials that are subject to the Act.

13. Pursuant to Rule 315 of this Court, the plaintiffs and the defendant shall attempt to resolve the plaintiffs' claim for attorneys' fees and expenses and shall advise the Court no later than forty-five (45) days after this Court has entered the Order provided for in paragraph 14 below on whether they have been able to resolve the issue of attorneys' fees and expenses. If no resolution has been reached, they will, at that time, recommend a schedule to the Court to resolve such claim.

14. The parties agree to the dissolution of the preliminary injunction entered on August 9, 1993, and dismissal with prejudice of this action, including all claims and cross-claims, except for the issue to be litigated as described in subparagraph 2(a) above, and any fees and expenses claimed pursuant to paragraph 13 above, by filing the attached Joint Motion to Vacate Preliminary Injunction and to Dismiss Claims, and the attached Consent Order. The parties agree that the Court shall retain jurisdiction to: (a) Consider the entry of an order in accordance

with the terms of paragraph 5 above; (b) resolve the issue to be litigated as described in subparagraph 2(a) above; (c) determine any fees and expenses claimed pursuant to paragraph 13 above; and (d) for the purpose of enforcing the terms of this Agreement. The parties further agree that such jurisdiction, except with respect to the issue described in paragraph 2 above, will be retained only until the later of the implementation of paragraph 11 above or the completion of the releases called for in paragraph 5 above. Plaintiffs and the Nixon estate further agree that they will not challenge any regulations issued by the Archives which implement and are consistent with this Agreement.

15. The terms of this Agreement may not be altered except with the written consent of the parties. Nothing in this Agreement constitutes an admission of liability or wrongdoing on the part of any party.

Executed this 12th day of April, 1996.

For Plaintiffs Stanley I. Kutler and Public Citizen:

Alan B. Morrison,

(D.C. Bar No. 073114), Public Citizen Litigation Group, 1600 20th Street NW., Washington, DC 20009, (202) 588–1000.

For Defendant John W. Carlin:

Anne L. Weismann,

(D.C. Bar No. 298190)

Judry L. Subar,

(D.C. Bar No. 347518)

Alina S. Kofsky,

(D.C. Bar No. 419093), Department of Justice, Federal Programs Branch, Civil Division, 901 E Street NW., Room 1010, Washington, DC 20530, (202) 514–4523.

For Defendant-Intervenors John H. Taylor and William E. Griffin:

Herbert J. Miller,

(D.C. Bar No. 026120)

R. Stan Mortenson,

(D.C. Bar No. 114678)

Scott L. Nelson,

(D.C. Bar No. 413548)

Ellen Fels Berkman,

(D.C. Bar No. 433310)

Miller, Cassidy, Larroca & Lewin,

2555 M Street, NW., Washington, DC 20037, (202) 293–6400.

[61 FR 17846, Apr. 23, 1996]

SUBCHAPTER G—NARA FACILITIES

PART 1280—PUBLIC USE OF NARA FACILITIES

Subpart A—What Are the General Rules of Conduct on NARA Property?

General Information on Using NARA Facilities

Sec.
1280.1 What is the purpose of this part?
1280.2 What property is under the control of the Archivist of the United States?
1280.4 Can children under the age of 14 use NARA facilities?
1280.6 May I bring a seeing-eye dog or other assistance animal?
1280.8 Will my belongings be searched?
1280.10 Are there special rules for driving on NARA property?
1280.12 Is parking available?
1280.14 May I use the shuttle bus to travel to the National Archives at College Park or to the National Archives Building in Washington, DC?
1280.16 Are there additional rules posted?

Prohibited Activities

1280.18 May I bring guns or other weapons onto NARA property?
1280.20 What is your policy on illegal drugs and alcohol?
1280.22 Is gambling allowed on NARA property?
1280.24 Is smoking allowed on NARA property?
1280.26 May I pass out fliers on NARA property?
1280.28 Where can I eat and drink on NARA property?
1280.30 Are soliciting, vending, and debt collection allowed on NARA property?
1280.32 What other behavior is not permitted?

Subpart B—What Are the Rules for Filming, Photographing, or Videotaping on NARA Property?

1280.40 Definitions.
1280.42 When do the rules in this subpart apply?
1280.44 May I film, photograph, or videotape on NARA property for commercial purposes?
1280.46 What are the rules for filming, photographing, or videotaping on NARA property for personal use?
1280.48 How do I apply to film, photograph, or videotape on NARA property for news purposes?
1280.50 What will I be allowed to film, photograph, or videotape for news purposes?
1280.52 What are the rules for filming, photographing, or videotaping on NARA property for news purposes?

Subpart C—What Are the Additional Rules for Using NARA Facilities in the Washington, DC, Area?

1280.60 Where do I enter the National Archives Building in Washington, DC?
1280.62 When is the Exhibition Hall open?
1280.64 What entrance should I use to enter the National Archives at College Park?
1280.66 May I use the National Archives Library?
1280.68 May I use the cafeteria at the National Archives at College Park?

Subpart D—How Do I Request to Use Washington, DC, Area NARA Facilities for an Event?

1280.70 When does NARA allow other groups to use its public areas for events?
1280.72 What are the general rules for using NARA public areas?
1280.74 How do I apply to use NARA public areas in Washington, DC, area facilities?
1280.76 What will I have to pay to use a NARA public area for an event?
1280.78 How will NARA handle my request to use a lecture room, the auditorium, the Theater, or the Archivist's Reception Room?
1280.80 May I ask to use the Exhibition Hall?

Subpart E—What Additional Rules Apply for Use of Facilities in Presidential Libraries?

1280.90 What are the rules of conduct while visiting the Presidential libraries?
1280.92 When are the Presidential library museums open to the public?
1280.94 When do Presidential libraries allow other groups to use their public areas for events?
1280.96 Supplemental rules.

Subpart F—What Additional Rules Apply for Use of Public Areas at Regional Records Services Facilities?

1280.100 What are the rules of conduct at NARA regional records services facilities?
1280.102 When do NARA regional records services facilities allow other groups to use their public areas for events?

AUTHORITY: 44 U.S.C. 2104(a).

SOURCE: 65 FR 34978, June 1, 2000, unless otherwise noted.

Subpart A—What Are the General Rules of Conduct on NARA Property?

GENERAL INFORMATION ON USING NARA FACILITIES

§ 1280.1 What is the purpose of this part?

(a) This part tells you what rules you must follow when you use property under the control of the Archivist of the United States (the National Archives Building, the National Archives at College Park, and the Presidential libraries).

(b) When you are using other NARA facilities, the General Services Administration (GSA) regulations, Conduct on Federal Property, at 41 CFR subpart 101–20.3 apply to you. These facilities are the NARA regional records services facilities, the Washington National Records Center in Suitland, MD, and the National Personnel Records Center in St. Louis, MO. The rules in Subpart B of this part also apply to you if you wish to film, take photographs, or make videotapes. The rules in Subpart F of this part also apply to you if you wish to use the NARA-assigned conference rooms in those facilities.

(c) If you are using records in a NARA research room in a NARA facility, you must also follow the rules in 36 CFR part 1254.

§ 1280.2 What property is under the control of the Archivist of the United States?

The following property is under the control of the Archivist of the United States and is defined as ''NARA property'' in this part 1280:

(a) *The National Archives Building*. Property under the control of the Archivist includes:

(1) The Pennsylvania Avenue, NW, entrance between 7th and 9th Streets including the area within the retaining walls on either side of the entrance, inclusive of the statues, and the steps and ramps leading up to the entrance of the building;

(2) On the 7th Street, 9th Street, and Constitution Avenue, NW, sides of the building, all property between the National Archives Building and the curb line of the street, including the sidewalks and other grounds, the steps leading up to the Constitution Avenue entrance, the Constitution Avenue entrance, and the portico area between the steps and the Constitution Avenue entrance.

(3) The National Park Service controls the areas on the Pennsylvania Avenue side of the National Archives Building that are not under the control of the Archivist of the United States.

(b) *The National Archives at College Park*. Property under control of the Archivist includes approximately 37 acres bounded:

(1) On the west by Adelphi Road;

(2) On the north by the Potomac Electric Power Company right-of-way;

(3) On the east by Metzerott Road; and

(4) On the south by the University of Maryland.

(c) *The Presidential Libraries*. Property under control of the Archivist includes the Presidential Libraries and Museums that are listed in 36 CFR 1253.3.

§ 1280.4 Can children under the age of 14 use NARA facilities?

Children under the age of 14 will be admitted to NARA facilities only if they are accompanied by an adult who will supervise them at all times while on NARA property. The director of a NARA facility may authorize a lower age limit for admission of unaccompanied children to meet special circumstances (e.g., students who have been given permission to conduct research without adult supervision).

§ 1280.6 May I bring a seeing-eye dog or other assistance animal?

Yes, persons with disabilities may bring guide dogs or other animals used for guidance and assistance onto NARA property. You may not bring any other animals into a NARA facility except for official purposes.

§ 1280.8 Will my belongings be searched?

Yes, at any time NARA may inspect all packages, briefcases, and other containers that you bring onto NARA property, including when you are entering or exiting NARA property.

§ 1280.10 Are there special rules for driving on NARA property?

(a) You must obey speed limits, posted signs, and other traffic laws, and park only in designated spaces.

(b) NARA will tow, at the owner's expense, any vehicle that is parked illegally. Except in emergencies, you may not park in spaces reserved for holders of NARA parking permits. If an emergency forces you to leave your vehicle in an illegal area, you must notify the security guards at that NARA facility as soon as possible. We will not tow your illegally parked car if you have notified a security guard of an emergency unless it is creating a hazard or blocking an entrance or an exit.

(c) We may deny any vehicle access to NARA property for public safety or security reasons.

§ 1280.12 Is parking available?

(a) *The National Archives Building.* There is no parking available for researchers or visitors to the National Archives Building. However, this building is easily accessible by bus or subway and there are several commercial parking lots located near the building.

(b) *The National Archives at College Park.* The National Archives at College Park has limited public parking space. The garage is open to the public on a first-come, first-served basis during the hours the research rooms are open. There is public bus service to this building. Individuals and groups visiting the National Archives at College Park are encouraged to use public transportation or car pool to get to the building as the parking lot is often full during our busiest hours.

(c) *Regional records services facilities.* Most regional records services facilities have onsite parking available for researchers. Parking at these facilities and at the Washington National Records Center is governed by GSA regulations, Management of Buildings and Grounds, found at 41 CFR part 101–20. The regional archives on Market Street in Philadelphia and the regional archives in New York City do not have onsite parking. However, there is ample parking in commercial parking garages near these facilities.

(d) *Presidential Libraries.* All of the Presidential Libraries have onsite parking for researchers and museum visitors. Some of the spaces are reserved for staff and for security reasons.

§ 1280.14 May I use the shuttle bus to travel to the National Archives at College Park or to the National Archives Building in Washington, DC?

The NARA shuttle, which travels concurrently each hour between the National Archives Building and the National Archives at College Park, is intended for NARA employees' use for official purposes. Other Government employees on official business or researchers may also use the shuttle if space is available. The shuttle operates Monday through Friday, excluding Federal holidays, 8:00 a.m. to 5:00 p.m.

[65 FR 34978, June 1, 2000; 65 FR 35840, June 6, 2000]

§ 1280.16 Are there additional rules posted?

Yes, there are additional rules posted on NARA property. You must, at all times while on NARA property, comply with official NARA signs and with the directions of the guards and NARA staff.

PROHIBITED ACTIVITIES

§ 1280.18 May I bring guns or other weapons onto NARA property?

No, you may not bring firearms or other dangerous or deadly weapons either openly or concealed onto NARA property except for official business. You also may not bring explosives, or items intended to be used to fabricate an explosive or incendiary device, onto NARA property. State-issued concealed-carry permits are not valid on NARA property.

§ 1280.20 What is your policy on illegal drugs and alcohol?

You may not use or be in possession of illegal drugs on NARA property. You also may not enter NARA property while under the influence of illegal drugs or alcohol. Using alcoholic beverages on NARA property is prohibited except for occasions when the Archivist of the United States or his/her designee has granted an exemption in writing.

§ 1280.22 Is gambling allowed on NARA property?

(a) No, you may not participate in any type of gambling while on NARA property. This includes:

(1) Participating in games for money or other personal property;

(2) Operating gambling devices;

(3) Conducting a lottery or pool; or

(4) Selling or purchasing numbers tickets.

(b) This rule does not apply to licensed blind operators of vending facilities who are selling chances for any lottery set forth in a State law and conducted by an agency of a State as authorized by section 2(a)(5) of the Randolph-Sheppard Act (20 U.S.C. 107, *et seq.*)

§ 1280.24 Is smoking allowed on NARA property?

Smoking is not allowed inside any NARA facility.

§ 1280.26 May I pass out fliers on NARA property?

No, you may not distribute or post handbills, fliers, pamphlets or other materials on bulletin boards or elsewhere on NARA property, except in those spaces designated by NARA as public forums. This prohibition does not apply to displays or notices distributed as part of authorized Government activities or bulletin boards used by employees to post personal notices.

§ 1280.28 Where can I eat and drink on NARA property?

You may only eat and drink in designated areas in NARA facilities. Eating and drinking is prohibited in the research, records storage, and museum areas unless specifically authorized by the Archivist or designee.

§ 1280.30 Are soliciting, vending, and debt collection allowed on NARA property?

(a) No, on NARA property you may not:

(1) Solicit for personal, charitable, or commercial causes;

(2) Sell any products;

(3) Display or distribute commercial advertising; or

(4) Collect private debts.

(b) If you are a NARA employee or contractor, you may participate in national or local drives for funds for welfare, health or other purposes that are authorized by the Office of Personnel Management and/or approved by NARA (e.g. the Combined Federal Campaign). Also, nothing in this section prohibits employees from activities permitted under the Standards of Ethical Conduct and Office of Government Ethics rules.

§ 1280.32 What other behavior is not permitted?

We reserve the right to remove anyone from NARA property who is:

(a) Stealing NARA property;

(b) Willfully damaging or destroying NARA property;

(c) Creating any hazard to persons or things;

(d) Throwing anything from or at a NARA building;

(e) Improperly disposing of rubbish.

(f) Acting in a disorderly fashion;

(g) Acting in a manner that creates a loud or unusual noise or a nuisance;

(h) Acting in a manner that unreasonably obstructs the usual use of NARA facilities:

(i) Acting in a manner that otherwise impedes or disrupts the performance of official duties by Government and contract employees;

(j) Acting in a manner that prevents the general public from obtaining NARA-provided services in a timely manner; or

(k) Loitering.

Subpart B—What Are the Rules for Filming, Photographing, or Videotaping on NARA Property?

§ 1280.40 Definitions.

(a) *Filming, photographing, or videotaping for commercial purposes.* Any filming, photographing, or videotaping to promote commercial enterprises or commodities.

(b) *News filming, photographing, or videotaping.* Any filming, photographing, or videotaping done by a commercial or non-profit news organization that is intended for use in a television or radio news broadcast, newspaper, or periodical.

(c) *Personal use filming, photographing, or videotaping.* Any filming, photographing, or videotaping intended solely for personal use that will not be commercially distributed.

§ 1280.42 When do the rules in this subpart apply?

(a) These rules apply to anyone who is filming, photographing, or videotaping inside any NARA-run facility and while on NARA property.

(b) Filming, photographing, and videotaping on the grounds of any NARA regional records services facility, or on the grounds surrounding the Washington National Records Center are governed by GSA regulations, Management of Buildings and Grounds, found at 41 CFR part 101–20, and must be approved by a GSA official.

§ 1280.44 May I film, photograph, or videotape on NARA property for commercial purposes?

No, filming, photographing, and videotaping on NARA property for commercial purposes is prohibited.

§ 1280.46 What are the rules for filming, photographing, or videotaping on NARA property for personal use?

(a) You may film, photograph, or videotape outside a NARA facility so long as you do not impede vehicular or pedestrian traffic.

(b) You may film, photograph, or videotape inside a NARA facility during regular business hours in public areas, including research rooms and exhibition areas, under the following conditions:

(1) You may not use a flash or other supplemental lighting;

(2) You may not use a tripod or similar equipment; and

(3) You may not film, photograph, or videotape while on the interior steps or ramp leading to the Declaration of Independence, the Constitution, and the Bill of Rights in the Exhibition Hall of the National Archives Building.

§ 1280.48 How do I apply to film, photograph, or videotape on NARA property for news purposes?

(a) If you wish to film, photograph, or videotape for news purposes at the National Archives Building, the National Archives at College Park, or the Washington National Records Center, you must request permission from the NARA Public Affairs Officer, 8601 Adelphi Road, College Park, Maryland, 20740–6001.

(b) If you wish to film, photograph, or videotape for news purposes at a Presidential library or at a regional records services facility, you must contact the director of the library (see 36 CFR 1253.3 for contact information) or regional records services facility (see 36 CFR 1253.6 for contact information) to request permission.

(c) Your request for permission to film, photograph, or videotape for news purposes must contain the following information:

(1) The name of the organization you are working for;

(2) Areas you wish to film, photograph, or videotape;

(3) Documents, if any, you wish to film;

(4) The purpose of the project you are working on;

(5) What you intend to do with the film, photograph, or videotape; and

(6) How long you will need to complete your work on NARA property.

(d) You must request permission at least one week in advance of your desired filming date. If you make a request within a shorter time period, we may not be able to accommodate your request.

(e) OMB control number 3095—0040 has been assigned to the information collection contained in this section.

(f) This section does not apply to you if you have permission to use your own microfilming equipment to film archival records and donated historical materials under the provisions of 36 CFR 1254.90 through 1254.102. You must follow the procedures in 36 CFR part 1254 for permission to film archival records and donated materials for research purposes or for microfilm publications.

§ 1280.50 What will I be allowed to film, photograph, or videotape for news purposes?

(a) NARA will permit you to film, photograph, or videotape sections of the interior or exterior of any NARA facility only for stories about:

(1) NARA programs;

(2) NARA exhibits;

(3) NARA holdings;

(4) NARA services;

(5) A former President;

(6) A researcher who has made or is making use of NARA holdings (provided that the researcher also approves your request); or

(7) Any other NARA-related activity approved by the appropriate NARA representative.

(b) NARA reserves the right to reject any request that does not meet the criteria set forth in 36 CFR 1280.50(a) and (c) or because of scheduling or staffing constraints.

(c) We will not grant you permission to film, photograph, or videotape if you intend to use the film, photographs, or videotape for commercial, partisan political, sectarian, or similar activities.

§ 1280.52 What are the rules for filming, photographing, or videotaping on NARA property for news purposes?

The following conditions and restrictions apply to anyone that has been granted permission to film, photograph, or videotape for news purposes under Subpart B:

(a) NARA may limit or prohibit use of artificial light in connection with the filming, photographing, or videotaping of documents for news purposes. You may not use any supplemental lighting devices while filming, photographing, or videotaping inside a NARA facility in the Washington, DC, area without the prior permission of the NARA Public Affairs Officer. If the Public Affairs Officer approves your use of artificial lighting in the Exhibition Hall, NARA will use facsimiles in place of the Declaration of Independence, the Constitution, and the Bill of Rights. If NARA approves your use of high intensity lighting, NARA will cover or replace with facsimiles all other exhibited documents that fall within the boundaries of such illumination. You may not use any supplemental lighting devices at the Presidential Libraries and the regional records services facilities without permission from a NARA representative at that facility.

(b) On a case-by-case basis, the Public Affairs Officer or other appropriate NARA representative may grant you permission to film, photograph, or videotape in stack areas containing unclassified records.

(c) While filming, photographing, or videotaping, you are liable for injuries to people or property that result from your activities on NARA property.

(d) At all times while on NARA property, you must conduct your activities in accordance with all applicable NARA regulations contained in this part.

(e) Your filming, photographing, or videotaping activity may not impede people who are entering or exiting any NARA facility unless otherwise authorized by the facility's director, or by the NARA Public Affairs Officer for Washington, DC, area facilities.

(f) You must be accompanied by a NARA staff member when filming, photographing, or videotaping the interior of any NARA facility.

(g) NARA will approve your request to do press interviews of NARA personnel on NARA property only when such employees are being interviewed in connection with official business. Interviews with NARA staff and researchers may take place only in areas designated by the NARA Public Affairs Officer for Washington, DC, area facilities, or by the appropriate NARA representative at other NARA facilities.

(h) You may film and photograph documents only in those areas which the NARA Public Affairs Staff designates in the National Archives Building, the National Archives at College Park, or the Washington National Records Center or in those areas designated as appropriate by the staff liaison at other NARA facilities.

(i) We will limit your film and photography sessions to two hours.

(j) You may not state or imply that NARA approves of or will sponsor:

(1) Your activities or views; or

(2) The uses to which you put images depicting any NARA facility.

Subpart C—What Are the Additional Rules for Using NARA Facilities in the Washington, DC, Area?

§ 1280.60 Where do I enter the National Archives Building in Washington, DC?

(a) To conduct research or official business, you must enter the Pennsylvania Avenue entrance of the National Archives Building.

(b) To visit the Exhibition Hall of the National Archives Building, you must enter through the Constitution Avenue entrance. However, the guards are authorized to admit through the Pennsylvania Avenue entrance and the Main Floor gates visitors who:

(1) Are using wheelchairs or other medical appliances;

(2) Are pushing strollers; or

(3) Have other medical or physical conditions that preclude using the steps at the Constitution Avenue entrance.

§ 1280.62 When is the Exhibition Hall open?

You may enter the Exhibition Hall from 10 a.m. to 9 p.m. except during winter months (the day after Labor Day through March 31) when the Exhibition Hall closes at 5:30 p.m. The Archivist of the United States reserves the authority to close the Exhibition Hall to the public at any time for special events or other purposes. The building is closed on December 25.

§ 1280.64 What entrance should I use to enter the National Archives at College Park?

You may enter the National Archives at College Park facility only through the main entrance on Adelphi Road. This entrance will be open to visitors during normal business hours described in 36 CFR 1253.2. Commercial deliveries must be made at the loading dock which is accessible only from Metzerott Road.

§ 1280.66 May I use the National Archives Library?

The National Archives Library facilities in the National Archives Building and in the National Archives at College Park are operated to meet the needs of researchers and NARA staff members. If you are not conducting research in archival materials at NARA, NARA Library staff will refer you to public libraries and other possible sources for such published materials.

§ 1280.68 May I use the cafeteria at the National Archives at College Park?

Yes, the cafeteria at the National Archives at College Park is open to the public during normal business hours.

Subpart D—How Do I Request to Use Washington, DC, Area NARA Facilities for an Event?

§ 1280.70 When does NARA allow other groups to use its public areas for events?

(a) All public areas in NARA facilities are intended for official NARA functions. However, if NARA does not have an event scheduled in a particular area, we may allow the use of that area for an event sponsored by another Federal agency or private group. The event must comply with the conditions in this subpart.

(b) In the National Archives Building, you may request to use the following areas:

Area	Capacity
Theater	216 persons.
Archivist's reception room	70 to 150 persons.
Conference rooms	30 to 70 persons.

(c) In the National Archives at College Park, you may request to use the following areas:

Area	Capacity
Auditorium	332 persons.
Lecture rooms	30 to 70 persons (or up to 300 with all dividers removed).

§ 1280.72 What are the general rules for using NARA public areas?

You must adhere to the following rules when using any NARA facility for an event:

(a) Any use of NARA public areas for an event must be for the benefit of or in connection with the archival and records activities administered by NARA and must be consistent with the

public perception of NARA as a research and cultural institution as articulated in our Strategic Plan.

(b) The event must be sponsored, co-sponsored, or authorized by NARA.

(c) You are not allowed to charge an admission fee or make any indirect assessment for admission, and you may not otherwise collect money at the event unless specifically authorized by the Archivist of the United States for special not-for-profit events which are held by organizations sponsored by NARA. Commercial advertising or the sale of any items is not permitted.

(d) No areas on NARA property may be used to promote commercial enterprises or products or for partisan political, sectarian, or similar purposes.

(e) Use of NARA public areas will not be authorized for any organization or group that engages in discriminatory practices proscribed by the Civil Rights Act of 1964, as amended.

(f) You must not misrepresent your identity to the public nor conduct any activities in a misleading or fraudulent manner.

(g) You must ensure that no Government property is destroyed, displaced, or damaged during your use of NARA public areas. You must take prompt action to replace, return, restore, repair or repay NARA for any damage caused to Government property during the use of NARA facilities.

(h) Most areas are available from 8 a.m. until 9:30 p.m., Monday through Friday, and from 9:00 a.m. until 4:30 p.m. on Saturday. A NARA staff member must be present at all times when the NARA facility is in use. If the facilities and staff are available, NARA may approve requests for events that would be held before or after these hours.

(i) You must provide support people as needed to register guests, distribute approved literature, name tags, and other material; and

(j) NARA must approve any item that you plan to distribute or display at the event, and any notice or advertisement that mentions NARA, the National Archives Trust Fund Board, or incorporates any of the seals described in 36 CFR 1200.2.

§ 1280.74 How do I apply to use NARA public areas in Washington, DC, area facilities?

(a) *How do I request to use a NARA public space for an event?* To request the use of a NARA public space in the Washington, DC, area, you must complete NA Form 16008, Application for Use of Space. OMB control number 3095–0043 has been assigned to the information collection contained in this section. Copies of the form are available from the Facilities and Materiel Management Services Division, National Archives and Records Administration, 8601 Adelphi Road, College Park, Maryland, 20740–6001. Completed forms must be sent to this address.

(b) *When do I need to submit my request?* You must submit requests for use of NARA public areas at least 30 calendar days before the proposed event is to occur.

§ 1280.76 What will I have to pay to use a NARA public area for an event?

(a) Non-Federal organizations will be required to make a contribution to the National Archives Trust Fund to maintain the public area and to cover the cost of additional cleaning, guard and other required services. NARA will determine how much your contribution will be, based upon the level of NARA-provided services for your event.

(b) Federal agencies using these spaces for official government functions must reimburse NARA only for the cost of additional cleaning, security, and other staff services.

(c) An estimate of the costs can be obtained by contacting the Facilities and Materiel Management Services Division, National Archives and Records Administration, 8601 Adelphi Road, College Park, Maryland, 20740–6001.

§ 1280.78 How will NARA handle my request to use a lecture room, the auditorium, the Theater, or the Archivist's Reception Room?

(a) When you request use of a NARA lecture room, auditorium, the Theater, or the Archivist's Reception Room, the Facilities and Materiel Management Services Division will review your request:

(1) To ensure that it meets all of the provisions in this subpart;

(2) To determine if the room you have requested is available on the date and time you have requested; and

(3) To determine the cost of the event.

(b) When the Facilities and Materiel Management Services Division has completed this review, they will notify you of their decision. They may ask for additional information before deciding whether or not to approve your event.

(c) NARA reserves the right to reject or require changes in any material, activity, or caterer you intend to use for the event.

§ 1280.80 May I ask to use the Exhibition Hall?

(a) The Exhibition Hall is primarily used for the public exhibition of the Charters of Freedom and other documents from NARA's holdings. NARA also uses the Exhibition Hall for activities that further its Strategic Plan. Therefore, the use of the Exhibition Hall for private events is not permitted. In rare circumstances, NARA does, upon application, permit other Federal agencies, quasi-Federal agencies, and State and local governments to use the Exhibition Hall for official functions, with NARA as a co-sponsor. Governmental groups that use the Exhibition Hall for official functions must reimburse NARA for the cost of additional cleaning, security, and other staff services.

(b) [Reserved]

Subpart E—What Additional Rules Apply for Use of Facilities in Presidential Libraries?

§ 1280.90 What are the rules of conduct while visiting the Presidential libraries?

In addition to the rules in Subpart A, when visiting the museums of the Presidential Libraries, you may be required to check all of your parcels and luggage in areas designated by Library staff.

§ 1280.92 When are the Presidential library museums open to the public?

(a) The hours of operation at Presidential Library museums vary. Please contact the individual facility you wish to visit for the hours of operation. See 36 CFR 1253.3 for Presidential Library contact information. All Presidential Library museums are closed on Thanksgiving, December 25, and January 1, with the exception of the Lyndon Baines Johnson Library Museum, which is closed only on December 25.

(b) See 36 CFR 1253.3 for the operating hours of the research rooms of the Presidential Libraries.

§ 1280.94 When do Presidential libraries allow other groups to use their public areas for events?

(a) Although Presidential Library buildings and grounds are intended primarily for the libraries' use in carrying out their programs, you may request the use of Presidential Library facilities when the proposed activity is:

(1) Sponsored, cosponsored, or authorized by the library;

(2) Conducted to further the library's interests; and

(3) Scheduled so as not to interfere with the normal operation of the library.

(b) Your event at the library must be for the benefit of or in connection with the mission and programs of the library and must be consistent with the public perception of the library as a research and cultural institution.

(c) To request the use of a library area, you must apply in writing to the library director (see 36 CFR 1253.3 for the address) and complete NA Form 16011, Application for Use of Space in Presidential Libraries. OMB control number 3095–0024 has been assigned to the information collection contained in this section.

(d) You may not use library facilities for any activities that involve:

(1) Profit making;

(2) Commercial advertising and sales;

(3) Partisan political activities;

(4) Sectarian activities, or other similar activities; or

(5) Any use inconsistent with those authorized in this section.

(e) You may not charge admission fees, indirect assessment, or take any other kind of monetary collection at the event. NARA will charge normal admission fees to the museum if that area is used for the event.

(f) You will be assessed additional charges by the library director to reimburse the Government for expenses incurred as a result of your use of the library facility.

§ 1280.96 Supplemental rules.

Library directors may establish appropriate supplemental rules governing use of Presidential libraries and adjacent buildings and areas under NARA control.

Subpart F—What Additional Rules Apply for Use of Public Areas at Regional Records Services Facilities?

§ 1280.100 What are the rules of conduct at NARA regional records services facilities?

While at any NARA regional records services facility, you are subject to the GSA regulations, Conduct on Federal Property (41 CFR subpart 101–20.3).

§ 1280.102 When do NARA regional records services facilities allow other groups to use their public areas for events?

(a) Although NARA regional records services facility auditoriums and other public spaces in the facility buildings and the facility grounds are intended primarily for the use of the NARA regional records services facility in carrying out its programs, you may request to use one of these areas for lectures, seminars, meetings, and similar activities when these activities are:

(1) Sponsored, cosponsored, or authorized by the NARA regional records services facility;

(2) To further NARA's interests; and

(3) Scheduled so as not to interfere with the normal operation of the NARA regional records services facility.

(b) Your event at the NARA regional records services facility must be for the benefit of or in connection with the mission and programs of NARA.

(c) You must ask permission to use a public area at a NARA regional records services facility from the director of that facility (see 36 CFR 1253.6 for a list of addresses).

(d) NARA regional records services facilities will not allow use of any auditoriums or other public spaces for any activities that involve:

(1) Profit making;

(2) Commercial advertising and sales;

(3) Partisan political activities;

(4) Sectarian activities, or other similar activities; or

(5) Any use inconsistent with those authorized in this section.

(e) You may not charge admission fees, indirect assessment, or take any other kind of monetary collection at the event.

(f) You will be assessed a charge by the facility director to reimburse the Government for expenses incurred as a result of the your use of the facility.

PART 1284—EXHIBITS

Sec.
1284.1 Scope of part.
1284.20 Temporary exhibition of privately-owned material.

AUTHORITY: 44 U.S.C. 2104(a).

§ 1284.1 Scope of part.

This part sets forth policies and procedures concerning the exhibition of materials at the National Archives Building.

[55 FR 25307, June 21, 1990]

§ 1284.20 Temporary exhibition of privately-owned material.

(a) Documents, paintings, or other objects belonging to private individuals or organizations normally will not be accepted for display at the National Archives Building except as part of a NARA-produced exhibit.

(b) NARA may accept for temporary special exhibit at the National Archives Building privately-owned documents or other objects under the following conditions:

(1) The material to be displayed relates to the institutional history of the National Archives and Records Administration or its predecessor organizations, the National Archives Establishment and the National Archives and Records Service;

(2) Exhibition space is available in the building that the NARA Office of Public Programs and the Document Conservation Branch judge to be appropriate in terms of security, light level,

climate control, and available exhibition cases or other necessary fixtures; and

(3) NARA has resources (such as exhibit and security staff) available to produce the special exhibit.

(c) The Assistant Archivist for Public Programs (NE), in conjunction with the NARA General Counsel when appropriate, shall review all offers to display privately-owned material and shall negotiate the terms of exhibition for offers that can be accepted. The lender shall provide evidence of title to and authenticity of the item(s) to be displayed before any loan agreement is executed.

(d) The Assistant Archivist shall inform the offeror of NARA's decision within 60 days.

[55 FR 25307, June 21, 1990]

SUBCHAPTER H—JFK ASSASSINATION RECORDS

PART 1290—GUIDANCE FOR INTERPRETATION AND IMPLEMENTATION OF THE PRESIDENT JOHN F. KENNEDY ASSASSINATION RECORDS COLLECTION ACT OF 1992 (JFK ACT)

Sec.
1290.1 Scope of assassination record.
1290.2 Scope of additional records and information.
1290.3 Sources of assassination records and additional records and information.
1290.4 Types of materials included in scope of assassination record and additional records and information.
1290.5 Requirement that assassination records be released in their entirety.
1290.6 Originals and copies.
1290.7 Additional guidance.
1290.8 Implementing the JFK Act—Notice of Assassination Record Designation.

AUTHORITY: 44 U.S.C. 2107.

SOURCE: 60 FR 33349, June 28, 1995, unless otherwise noted. Redesignated at 65 FR 39550, June 27, 2000.

§ 1290.1 Scope of assassination record.

(a) An *assassination record* includes, but is not limited to, all records, public and private, regardless of how labeled or identified, that document, describe, report on, analyze or interpret activities, persons, or events reasonably related to the assassination of President John F. Kennedy and investigations of or inquiries into the assassination.

(b) An *assassination record* further includes, without limitation:

(1) All records as defined in Section 3(2) of the JFK Act;

(2) All records collected by or segregated by all Federal, state, and local government agencies in conjunction with any investigation or analysis of or inquiry into the assassination of President Kennedy (for example, any intra-agency investigation or analysis of or inquiry into the assassination; any interagency communication regarding the assassination; any request by the House Select Committee on Assassinations to collect documents and other materials; or any inter- or intra-agency collection or segregation of documents and other materials);

(3) Other records or groups of records listed in the Notice of Assassination Record Designation, as described in § 1290.8 of this chapter.

[60 FR 33349, June 28, 1995. Redesignated at 65 FR 39550, June 27, 2000, as amended at 66 FR 18873, Apr. 12, 2001]

§ 1290.2 Scope of additional records and information.

The term *additional records and information* includes:

(a) All documents used by government offices and agencies during their declassification review of assassination records as well as all other documents, indices, and other material (including but not limited to those that disclose cryptonyms, code names, or other identifiers that appear in assassination records) that the Assassination Records Review Board (Review Board) has a reasonable basis to believe may constitute an assassination record or would assist in the identification, evaluation or interpretation of an assassination record. The Review Board will identify in writing those records and other materials it intends to seek under this section.

(b) All training manuals, instructional materials, and guidelines created or used by the agencies in furtherance of their review of assassination records.

(c) All records, lists, and documents describing the procedure by which the agencies identified or selected assassination records for review.

(d) Organizational charts of government agencies.

(e) Records necessary and sufficient to describe the agency's:

(1) Records policies and schedules;

(2) Filing systems and organization;

(3) Storage facilities and locations;

(4) Indexing symbols, marks, codes, instructions, guidelines, methods, and procedures;

(5) Search methods and procedures used in the performance of the agencies' duties under the JFK Act; and

(6) Reclassification to a higher level, transfer, destruction, or other information (*e.g.*, theft) regarding the status of assassination records.

(f) Any other record that does not fall within the scope of assassination record as described in § 1290.1, but which has the potential to enhance, enrich, and broaden the historical record of the assassination.

[60 FR 33349, June 28, 1995, unless otherwise noted. Redesignated at 65 FR 39550, June 27, 2000, as amended at 66 FR 18873, Apr. 12, 2001]

§ 1290.3 Sources of assassination records and additional records and information.

Assassination records and additional records and information may be located at, or under the control of, without limitation:

(a) Agencies, offices, and entities of the executing, legislative, and judicial branches of the Federal Government;

(b) Agencies, offices, and entities of the executive, legislative, and judicial branches of state and local governments;

(c) Record repositories and archives of Federal, state, and local governments, including presidential libraries;

(d) Record repositories and archives of universities, libraries, historical societies, and other similar organizations;

(e) Individuals who possess such records by virtue of service with a government agency, office, or entity;

(f) Persons, including individuals and corporations, who have obtained such records from sources identified in paragraphs (a) through (e) of this section;

(g) Persons, including individuals and corporations, who have themselves created or have obtained such records from sources other than those identified in paragraphs (a) through (e) of this section;

(h) Federal, state, and local courts where such records are being held under seal; or

(i) Foreign governments.

§ 1290.4 Types of materials included in scope of assassination record and additional records and information.

The term *record* in *assassination record* and *additional records and information* includes, for purposes of interpreting and implementing the JFK Act:

(a) Papers, maps, and other documentary material;

(b) Photographs;

(c) Motion pictures;

(d) Sound and video recordings;

(e) Machine readable information in any form; and

(f) Artifacts.

§ 1290.5 Requirement that assassination records be released in their entirety.

An assassination record shall be released in its entirety except for portions specifically postponed pursuant to the grounds for postponement of public disclosure of records established in § 2107.6 of the JFK Act, and no portion of any assassination record shall be withheld from public disclosure solely on grounds of non-relevance unless, in the Review Board's sole discretion, release of part of a record is sufficient to comply with the intent and purposes of the JFK Act.

§ 1290.6 Originals and copies.

(a) For purposes of determining whether originals or copies of assassination records will be made part of the President John F. Kennedy Assassination Records Collection (JFK Assassination Records Collection) established under the JFK Act, the following shall apply:

(1) In the case of papers, maps, and other documentary materials, the Review Board may determine that record copies of government records, either the signed original, original production or a reproduction that has been treated as the official record maintained to chronicle government functions or activities, may be placed in the JFK Assassination Records Collection;

(2) In the case of other papers, maps, and other documentary material, the Review Board may determine that a true and accurate copy of a record in lieu of the original may be placed in the JFK Assassination Records Collection;

(3) In the case of photographs, the original negative, whenever available (otherwise, the earliest generation print that is a true and accurate copy), may be placed in the JFK Assassination Records Collection;

(4) In the case of motion pictures, the camera original, whenever available (otherwise, the earliest generation

print that is a true and accurate copy), may be placed in the JFK Assassination Records Collection;

(5) In the case of sound and video recordings, the original recording, whenever available (otherwise, the earliest generation copy that is a true and accurate copy), may be placed in the JFK Assassination Records Collection;

(6) In the case of machine-readable information, a true and accurate copy of the original (duplicating all information contained in the original and in a format that permits retrieval of the information), may be placed in the JFK Assassination Records Collection; and

(7) In the case of artifacts, the original objects themselves may be placed in the JFK Assassination Records Collection.

(b) To the extent records from foreign governments are included in the JFK Assassination Records Collection, copies of the original records shall be sufficient for inclusion in the collection.

(c) In cases where a copy, as defined in paragraph (a) of this section, is authorized by the Review Board to be included in the JFK Assassination Records Collection, the Review Board may require that a copy be certified if, in its discretion, it determines a certification to be necessary to ensure the integrity of the JFK Assassination Records Collection. In cases where an original, as defined in paragraph (a) of this section, is required for inclusion in the JFK Assassination Records Collection, the Review Board may, at its discretion, accept the best available copy. In such cases that records included in the JFK Assassination Records Collection, whether originals or copies, contain illegible portions, such records shall have attached thereto a certified transcription of the illegible language to the extent practicable.

(d) For purposes of implementing the JFK Act, the term *copy* means a true and accurate photocopy duplication by a means appropriate to the medium of the original record that preserves and displays the integrity of the record and the information contained in it.

(e) Nothing in this section shall be interpreted to suggest that additional copies of any assassination records contained in the JFK Assassination Records Collection are not also assassination records that, at the Review Board's discretion, may also be placed in the JFK Assassination Records Collection.

(f) Nothing in this section shall be interpreted to prevent or to preclude copies of any electronic assassination records from being reformatted electronically in order to conform to different hardward and/or software requirements of audiovisual or machine readable formats if such is the professional judgment of the National Archives and Records Administration.

§ 1290.7 Additional guidance.

(a) A government agency, office, or entity includes, for purposes of interpreting and implementing the JFK Act, all current, past, and former departments, agencies, offices, divisions, foreign offices, bureaus, and deliberative bodies of any Federal, state, or local government and includes all inter- or intra-agency working groups, committees, and meetings that possess or created records relating to the assassination of President John F. Kennedy.

(b) The inclusion of artifacts in the scope of the term assassination record is understood to apply solely to the JFK Assassination Records Collection and to implement fully the terms of the JFK Act and has no direct or indirect bearing on the interpretation or implementation of any other statute or regulation.

(c) Whenever artifacts are included in the JFK Assassination Records Collection, it shall be sufficient to comply with the JFK Act if the public is provided access to photographs, drawings, or similar materials depicting the artifacts. Additional display of or examination by the public of artifacts in the JFK Assassination Records Collection shall occur under the terms and conditions established by the National Archives and Records Administration to ensure their preservation and protection for posterity.

(d) The terms and, or, any, all, and the plural and singular forms of nouns shall be understood in their broadest and most inclusive sense and shall not be understood to be terms of limitation.

(e) Unless the Review Board in its sole discretion directs otherwise, records that are identified with respect to a particular person shall include all records ralating to that person that use or reflect the true name or any other name, pseudonym, codeword, symbol number, cryptonym, or alias used to identify that person.

(f) Unless the Review Board in its sole discretion directs otherwise, records that are identified by the Review Board with respect to a particular operation or program shall include all records, pertaining to that program by any other name, pseudonym, codeword, symbol, number, or cryptonym.

§ 1290.8 Implementing the JFK Act—Notice of Assassination Record Designation.

(a) A Notice of Assassination Record Designation (NARD) shall be the mechanism for the Review Board to announce publicly its determination that a record or group of records meets the definition of assassination records.

(b) Notice of all NARDs will be published in the FEDERAL REGISTER within 30 days of the decision to designate such records as assassination records.

(c) In determining to designate such records as assassination records, the Review Board must determine that the record or group of record will more likely than not enhance, enrich, and broaden the historical record of the assassination.

PARTS 1291–1299 [RESERVED]