AUTHENTICATED
U.S. GOVERNMENT
INFORMATION
GPO

SUBCHAPTER C—AIR PROGRAMS (CONTINUED)

PART 63—NATIONAL EMISSION STANDARDS FOR HAZARDOUS AIR POLLUTANTS FOR SOURCE CATEGORIES

Subpart EEE—National Emission Standards for Hazardous Air Pollutants from Hazardous Waste Combustors

GENERAL

Sec.
63.1200 Who is subject to these regulations?
63.1201 Definitions and acronyms used in this subpart.
63.1202 [Reserved]

EMISSIONS STANDARDS AND OPERATING LIMITS

63.1203 What are the standards for hazardous waste incinerators?
63.1204 What are the standards for hazardous waste burning cement kilns?
63.1205 What are the standards for hazardous waste burning lightweight aggregate kilns?

MONITORING AND COMPLIANCE PROVISIONS

63.1206 When and how must you comply with the standards and operating requirements?
63.1207 What are the performance testing requirements?
63.1208 What are the test methods?
63.1209 What are the monitoring requirements?

NOTIFICATION, REPORTING AND RECORDKEEPING

63.1210 What are the notification requirements?
63.1211 What are the recordkeeping and reporting requirements?

OTHER

63.1213 How can the compliance date be extended to install pollution prevention or waste minimization controls?

TABLE 1 TO SUBPART EEE OF PART 63—GENERAL PROVISIONS APPLICABLE TO SUBPART EEE

APPENDIX A TO SUBPART EEE—QUALITY ASSURANCE PROCEDURES FOR CONTINUOUS EMISSIONS MONITORS USED FOR HAZARDOUS WASTE COMBUSTORS

Subpart FFF [Reserved]

Subpart GGG—National Emission Standards for Pharmaceuticals Production

63.1250 Applicability.
63.1251 Definitions.
63.1252 Standards: General.
63.1253 Standards: Storage tanks.
63.1254 Standards: Process vents.
63.1255 Standards: Equipment leaks.
63.1256 Standards: Wastewater.
63.1257 Test methods and compliance procedures.
63.1258 Monitoring requirements.
63.1259 Recordkeeping requirements.
63.1260 Reporting requirements.
63.1261 Delegation of authority.

TABLE 1 TO SUBPART GGG—GENERAL PROVISIONS APPLICABILITY TO SUBPART GGG

TABLE 2 TO SUBPART GGG—PARTIALLY SOLUBLE HAP

TABLE 3 TO SUBPART GGG—SOLUBLE HAP

TABLE 4 TO SUBPART GGG—MONITORING REQUIREMENTS FOR CONTROL DEVICES

TABLE 5 TO SUBPART GGG—CONTROL REQUIREMENTS FOR ITEMS OF EQUIPMENT THAT MEET THE CRITERIA OF § 63.1252(F)

TABLE 6 TO SUBPART GGG—WASTEWATER—COMPLIANCE OPTIONS FOR WASTEWATER TANKS

TABLE 7 TO SUBPART GGG—WASTEWATER—INSPECTION AND MONITORING REQUIREMENTS FOR WASTE MANAGEMENT UNITS

TABLE 8 TO SUBPART GGG—FRACTION MEASURED (F_m) FOR HAP COMPOUNDS IN WASTEWATER STREAMS

TABLE 9 TO SUBPART GGG—DEFAULT BIORATES FOR LIST 1 COMPOUNDS

Subpart HHH—National Emission Standards for Hazardous Air Pollutants From Natural Gas Transmission and Storage Facilities

63.1270 Applicability and designation of affected source.
63.1271 Definitions.
63.1272 Startups, shutdowns, and malfunctions.
63.1273 [Reserved]
63.1274 General standards.
63.1275 Glycol dehydration unit process vent standards.
63.1276–63.1280 [Reserved]
63.1281 Control equipment requirements.
63.1282 Test methods, compliance procedures, and compliance demonstrations.
63.1283 Inspection and monitoring requirements.
63.1284 Recordkeeping requirements.
63.1285 Reporting requirements.
63.1286 Delegation of authority.
63.1287 Alternative means of emission limitation.
63.1288–63.1289 [Reserved]

APPENDIX TO SUBPART HHH—TABLES

Subpart III—National Emission Standards for Hazardous Air Pollutants for Flexible Polyurethane Foam Production

63.1290 Applicability.
63.1291 Compliance schedule.
63.1292 Definitions.
63.1293 Standards for slabstock flexible polyurethane foam production.
63.1294 Standards for slabstock flexible polyurethane foam production—diisocyanate emissions.
63.1295 Standards for slabstock flexible polyurethane foam production—HAP ABA storage vessels.
63.1296 Standards for slabstock flexible polyurethane foam production—HAP ABA equipment leaks.
63.1297 Standards for slabstock flexible polyurethane foam production—HAP ABA emissions from the production line.
63.1298 Standards for slabstock flexible polyurethane foam production—HAP emissions from equipment cleaning.
63.1299 Standards for slabstock flexible polyurethane foam production—source-wide emission limitation.
63.1300 Standards for molded flexible polyurethane foam production.
63.1301 Standards for rebond foam production.
63.1302 Applicability of subpart A requirements.
63.1303 Monitoring requirements.
63.1304 Testing requirements.
63.1305 Alternative means of emission limitation.
63.1306 Reporting requirements.
63.1307 Recordkeeping requirements.
63.1308 Compliance demonstrations.
63.1309 Delegation of authority.
APPENDIX TO SUBPART III—TABLES

Subpart JJJ—National Emission Standards for Hazardous Air Pollutant Emissions: Group IV Polymers and Resins

63.1310 Applicability and designation of affected sources.
63.1311 Compliance dates and relationship of this supbart to existing applicable rules.
63.1312 Definitions.
63.1313 Emission standards.
63.1314 Storage vessel provisions.
63.1315 Continuous process vents provisions.
63.1316 PET and polystyrene affected sources—emissions control provisions.
63.1317 PET and polystyrene affected sources—monitoring provisions.
63.1318 PET and polystyrene affected sources—testing and compliance demonstration provisions.
63.1319 PET and polystyrene affected sources—recordkeeping provisions.
63.1320 PET and polystyrene affected sources—reporting provisions.
63.1321 Batch process vents provisions.
63.1322 Batch process vents—reference control technology.
63.1323 Batch process vents—methods and procedures for group determination.
63.1324 Batch process vents—monitoring equipment.
63.1325 Batch process vents—performance test methods and procedures to determine compliance.
63.1326 Batch process vents—recordkeeping provisions.
63.1327 Batch process vents—reporting requirements.
63.1328 Heat exchange systems provisions.
63.1329 Process contact cooling towers provisions.
63.1330 Wastewater provisions.
63.1331 Equipment leak provisions.
63.1332 Emissions averaging provisions.
63.1333 Additional requirements for performance testing.
63.1334 Parameter monitoring levels and excursions.
63.1335 General recordkeeping and reporting provisions.
TABLE 1 TO SUBPART JJJ OF PART 63—APPLICABILITY OF GENERAL PROVISIONS TO SUBPART JJJ AFFECTED SOURCES
TABLE 2 TO SUBPART JJJ OF PART 63—GROUP 1 STORAGE VESSELS AT EXISTING AFFECTED SOURCES
TABLE 3 TO SUBPART JJJ OF PART 63—GROUP 1 STORAGE VESSELS AT EXISTING AFFECTED SOURCES PRODUCING THE LISTED THERMOPLASTICS
TABLE 4 TO SUBPART JJJ OF PART 63—GROUP 1 STORAGE VESSELS AT NEW AFFECTED SOURCES
TABLE 5 TO SUBPART JJJ OF PART 63—GROUP 1 STORAGE VESSELS AT NEW AFFECTED SOURCES PRODUCING THE LISTED THERMOPLASTICS
TABLE 6 TO SUBPART JJJ OF PART 63—KNOWN ORGANIC HAP EMITTED FROM THE PRODUCTION OF THERMOPLASTIC PRODUCTS
TABLE 7 TO SUBPART JJJ OF PART 63—GROUP 1 BATCH PROCESS VENTS AND AGGREGATE BATCH VENT STREAMS—MONITORING, RECORDKEEPING, AND REPORTING REQUIREMENTS
TABLE 8 TO SUBPART JJJ OF PART 63—OPERATING PARAMETERS FOR WHICH LEVELS ARE REQUIRED TO BE ESTABLISHED FOR CONTINUOUS AND BATCH PROCESS VENTS AND AGGREGATE BATCH VENT STREAMS
TABLE 9 TO SUBPART JJJ OF PART 63—ROUTINE REPORTS REQUIRED BY THIS SUBPART

Subpart KKK [Reserved]

Subpart LLL—National Emission Standards for Hazardous Air Pollutants From the Portland Cement Manufacturing Industry

GENERAL

63.1340 Applicability and designation of affected sources.
63.1341 Definitions.

EMISSION STANDARDS AND OPERATING LIMITS

63.1342 Standards: General.
63.1343 Standards for kilns and in-line kiln/raw mills.
63.1344 Operating limits for kilns and in-line kiln/raw mills.
63.1345 Standards for clinker coolers.
63.1346 Standards for new and reconstructed raw material dryers.
63.1347 Standards for raw and finish mills.
63.1348 Standards for affected sources other than kilns; in-line kiln raw mills; clinker coolers; new and reconstructed raw material dryers; and raw and finish mills.

MONITORING AND COMPLIANCE PROVISIONS

63.1349 Performance testing requirements.
63.1350 Monitoring requirements.
63.1351 Compliance dates.
63.1352 Additional test methods.

NOTIFICATION, REPORTING AND RECORDKEEPING

63.1353 Notification requirements.
63.1354 Reporting requirements.
63.1355 Recordkeeping requirements.

OTHER

63.1356 Exemption from new source performance standards.
63.1357 Temporary, conditioned exemption from particulate and opacity standards.
63.1358 Delegation of authority.
63.1359 [Reserved]

TABLE 1 TO SUBPART LLL OF PART 63—APPLICABILITY OF GENERAL PROVISIONS

Subpart MMM—National Emission Standards for Hazardous Air Pollutants for Pesticide Active Ingredient Production

63.1360 Applicability.
63.1361 Definitions.
63.1362 Standards.
63.1363 Standards for equipment leaks.
63.1364 Compliance dates.
63.1365 Test methods and initial compliance procedures.
63.1366 Monitoring and inspection requirements.
63.1367 Recordkeeping requirements.
63.1368 Reporting requirements.
63.1369 Delegation of authority.

TABLE 1 TO SUBPART MMM OF PART 63—GENERAL PROVISIONS APPLICABILITY TO SUBPART MMM.
TABLE 2 TO SUBPART MMM OF PART 63—STANDARDS FOR NEW AND EXISTING PAI SOURCES.
TABLE 3 TO SUBPART MMM OF PART 63—MONITORING REQUIREMENTS FOR CONTROL DEVICES.
TABLE 4 TO SUBPART MMM OF PART 63—CONTROL REQUIREMENTS FOR ITEMS OF EQUIPMENT THAT MEET THE CRITERIA OF § 63.1362(K).

Subpart NNN—National Emission Standards for Hazardous Air Pollutants for Wool Fiberglass Manufacturing

63.1380 Applicability.
63.1381 Definitions.
63.1382 Emission standards.
63.1383 Monitoring requirements.
63.1384 Performance test requirements.
63.1385 Test methods and procedures.
63.1386 Notification, recordkeeping, and reporting requirements.
63.1387 Compliance dates.
63.1388–63.1399 [Reserved]

TABLE 1 TO SUBPART NNN OF PART 63—APPLICABILITY OF GENERAL PROVISIONS (40 CFR PART 63, SUBPART A) TO SUBPART NNN.
APPENDIX A TO SUBPART NNN OF PART 63—METHOD FOR THE DETERMINATION OF LOI
APPENDIX B TO SUBPART NNN OF PART 63—FREE FORMALDEHYDE ANALYSIS OF INSULATION RESINS BY HYDROXYLAMINE HYDROCHLORIDE
APPENDIX C TO SUBPART NNN OF PART 63—METHOD FOR THE DETERMINATION OF PRODUCT DENSITY

Subpart OOO—National Emission Standards for Hazardous Air Pollutant Emissions: Manufacture of Amino/Phenolic Resins

63.1400 Applicability and designation of affected sources.
63.1401 Compliance schedule.
63.1402 Definitions.
63.1403 Emission standards.
63.1404 Storage vessel provisions.
63.1405 Continuous process vent provisions.
63.1406 Reactor batch process vent provisions.
63.1407 Non-reactor batch process vent provisions.
63.1408 Aggregate batch vent stream provisions.
63.1409 Heat exchange system provisions.
63.1410 Equipment leak provisions.
63.1411 [Reserved]
63.1412 Continuous process vent applicability assessment procedures and methods.
63.1413 Compliance demonstration procedures.

63.1414 Test methods and emission estimation equations.
63.1415 Monitoring requirements.
63.1416 Recordkeeping requirements.
63.1417 Reporting requirements.
63.1418 [Reserved]
63.1419 Delegation of authority.
TABLE 1 TO SUBPART OOO OF PART 63-APPLICABILITY OF GENERAL PROVISIONS TO SUBPART OOO AFFECTED SOURCES
TABLE 2 TO SUBPART OOO OF PART 63—KNOWN ORGANIC HAZARDOUS AIR POLLUTANTS (HAP) FROM THE MANUFACTURE OF AMINO/PHENOLIC RESINS
TABLE 3 TO SUBPART OOO OF PART 63—BATCH PROCESS VENT MONITORING REQUIREMENTS
TABLE 4 TO SUBPART OOO OF PART 63—OPERATING PARAMETER LEVELS
TABLE 5 TO SUBPART OOO OF PART 63—REPORTS REQUIRED BY THIS SUBPART
TABLE 6 TO SUBPART OOO OF PART 63—COEFFICIENTS FOR TOTAL RESOURCE EFFECTIVENESS

Subpart PPP—National Emission Standards for Hazardous Air Pollutant Emissions for Polyether Polyols Production

63.1420 Applicability and designation of affected sources.
63.1421 Delegation of authority.
63.1422 Compliance dates and relationship of this rule to existing applicable rules.
63.1423 Definitions.
63.1424 Emission standards.
63.1425 Process vent control requirements.
63.1426 Process vent requirements for determining organic HAP concentration, control efficiency, and aggregated organic HAP emission reduction for a PMPU.
63.1427 Process vent requirements for processes using extended cookout as an epoxide emission reduction technique.
63.1428 Process vent requirements for group determination of PMPUs using a non-epoxide organic HAP to make or modify the product.
63.1429 Process vent monitoring requirements.
63.1430 Process vent reporting and recordkeeping requirements.
63.1431 Process vent annual epoxides emission factor plan requirements.
63.1432 Storage vessel provisions.
63.1433 Wastewater provisions.
63.1434 Equipment leak provisions.
63.1435 Heat exchanger provisions.
63.1436 [Reserved]
63.1437 Additional requirements for performance testing.
63.1438 Parameter monitoring levels and excursions.
63.1439 General recordkeeping and reporting provisions.
TABLE 1 TO SUBPART PPP OF PART 63—APPLICABILITY OF GENERAL PROVISIONS TO SUBPART PPP AFFECTED SOURCES
TABLE 2 TO SUBPART PPP OF PART 63—APPLICABILITY OF SUBPARTS F, G, H, AND U TO SUBPART PPP AFFECTED SOURCES
TABLE 3 TO SUBPART PPP OF PART 63—GROUP 1 STORAGE VESSELS AT EXISTING AND NEW AFFECTED SOURCES
TABLE 4 TO SUBPART PPP OF PART 63—KNOWN ORGANIC HAP FROM POLYETHER POLYOL PRODUCTS
TABLE 5 TO SUBPART PPP OF PART 63—PROCESS VENTS FROM BATCH UNIT OPERATIONS—MONITORING, RECORDKEEPING, AND REPORTING REQUIREMENTS
TABLE 6 TO SUBPART PPP OF PART 63—PROCESS VENTS FROM CONTINUOUS UNIT OPERATIONS—MONITORING, RECORDKEEPING, AND REPORTING REQUIREMENTS
TABLE 7 TO SUBPART PPP OF PART 63—OPERATING PARAMETERS FOR WHICH MONITORING LEVELS ARE REQUIRED TO BE ESTABLISHED FOR PROCESS VENTS STREAMS
TABLE 8 TO SUBPART PPP OF PART 63—ROUTINE REPORTS REQUIRED BY THIS SUBPART

Subpart QQQ—National Emission Standards for Hazardous Air Pollutants for Primary Copper Smelting

WHAT THIS SUBPART COVERS

Sec.
63.1440 What is the purpose of this subpart?
63.1441 Am I subject to this subpart?
63.1442 What parts of my plant does this subpart cover?
63.1443 When do I have to comply with this subpart?

EMISSION LIMITATIONS AND WORK PRACTICE STANDARDS

63.1444 What emissions limitations and work practice standards must I meet for my copper concentrate dryers, smelting furnaces, slag cleaning vessels, and copper converter departments?
63.1445 What work practice standards must I meet for my fugitive dust sources?
63.1446 What alternative emission limitation may I meet for my combined gas streams?

OPERATION AND MAINTENANCE REQUIREMENTS

63.1447 What are my operation and maintenance requirements?

GENERAL COMPLIANCE REQUIREMENTS

63.1448 What are my general requirements for complying with this subpart?

INITIAL COMPLIANCE REQUIREMENTS

63.1449 By what date must I conduct performance tests or other initial compliance demonstrations?

63.1450 What test methods and other procedures must I use to demonstrate initial compliance with the emission limitations?
63.1451 How do I demonstrate initial compliance with the emission limitations, work practice standards, and operation and maintenance requirements that apply to me?

CONTINUOUS COMPLIANCE REQUIREMENTS

63.1452 What are my monitoring requirements?
63.1453 How do I demonstrate continuous compliance with the emission limitations, work practice standards, and operations and maintenance requirements that apply to me?

NOTIFICATIONS, REPORTS AND RECORDS

63.1454 What notifications must I submit and when?
63.1455 What reports must I submit and when?
63.1456 What records must I keep and how long must I keep my records?

OTHER REQUIREMENTS AND INFORMATION

63.1457 What part of the General Provisions apply to me?
63.1458 Who implements and enforces this subpart?
63.1459 What definitions apply to this subpart?
TABLE 1 TO SUBPART QQQ OF PART 63—APPLICABILITY OF GENERAL PROVISIONS TO SUBPART QQQ.
FIGURE 1 TO SUBPART QQQ OF PART 63—DATA SUMMARY SHEET FOR DETERMINATION OF AVERAGE OPACITY.

Subpart RRR—National Emission Standards for Hazardous Air Pollutants for Secondary Aluminum Production

GENERAL

63.1500 Applicability.
63.1501 Dates.
63.1502 Incorporation by reference.
63.1503 Definitions.
63.1504 [Reserved]

EMISSION STANDARDS AND OPERATING REQUIREMENTS

63.1505 Emission standards for affected sources and emission nits.
63.1506 Operating requirements.
63.1507–63.1509 [Reserved]

MONITORING AND COMPLIANCE PROVISIONS

63.1510 Monitoring requirements.
63.1511 Performance test/compliance demonstration general requirements.
63.1512 Performance test/compliance demonstration requirements and procedures.
63.1513 Equations for determining compliance.
63.1514 [Reserved]

NOTIFICATIONS, REPORTS, AND RECORDS

63.1515 Notifications.
63.1516 Reports.
63.1517 Records.

OTHER

63.1518 Applicability of general provisions.
63.1519 Delegation of authority.
63.1520 [Reserved]
TABLE 1 TO SUBPART RRR—EMISSION STANDARDS FOR NEW AND EXISTING AFFECTED SOURCES
TABLE 2 TO SUBPART RRR—SUMMARY OF OPERATING REQUIREMENTS FOR NEW AND EXISTING AFFECTED SOURCES AND EMISSION UNITS
TABLE 3 TO SUBPART RRR—SUMMARY OF MONITORING REQUIREMENTS FOR NEW AND EXISTING AFFECTED SOURCES AND EMISSION UNITS APPENDIX A TO SUBPART RRR—GENERAL PROVISIONS APPLICABILITY TO SUBPART RRR

Subpart SSS [Reserved]

Subpart TTT—National Emission Standards for Hazardous Air Pollutants for Primary Lead Smelting

63.1541 Applicability.
63.1542 Definitions.
63.1543 Standards for process and process fugitive sources.
63.1544 Standards for fugitive dust sources.
63.1545 Compliance dates.
63.1546 Test methods.
63.1547 Monitoring requirements.
63.1548 Notification requirements.
63.1549 Recordkeeping and reporting requirements.
63.1550 Delegation of authority.

Subpart UUU—National Emission Standards for Hazardous Air Pollutants for Petroleum Refineries: Catalytic Cracking Units, Catalytic Reforming Units, and Sulfur Recovery Units

WHAT THIS SUBPART COVERS

Sec.
63.1560 What is the purpose of this subpart?
63.1561 Am I subject to this subpart?
63.1562 What parts of my plant are covered by this subpart?
63.1563 When do I have to comply with this subpart?

CATALYTIC CRACKING UNITS, CATALYTIC REFORMING UNITS, SULFUR RECOVERY UNITS, AND BYPASS LINES

63.1564 What are my requirements for metal HAP emissions from catalytic cracking units?
63.1565 What are my requirements for organic HAP emissions from catalytic cracking units?
63.1566 What are my requirements for organic HAP emissions from catalytic reforming units?
63.1567 What are my requirements for inorganic HAP emissions from catalytic reforming units?
63.1568 What are my requirements for HAP emissions from sulfur recovery units?
63.1569 What are my requirements for HAP emissions from bypass lines?

General Compliance Requirements

63.1570 What are my general requirements for complying with this subpart?
63.1571 How and when must I conduct a performance test or other initial compliance demonstration?
63.1572 What are my monitoring installation, operation, and maintenance requirements?
63.1573 What are my monitoring alternatives?

NOTIFICATIONS, REPORTS, AND RECORDS

63.1574 What notifications must I submit and when?
63.1575 What reports must I submit and when?
63.1576 What records must I keep, in what form, and for how long?

OTHER REQUIREMENTS AND INFORMATION

63.1577 What parts of the General Provisions apply to me?
63.1578 Who implements and enforces this subpart?
63.1579 What definitions apply to this subpart?

TABLES

TABLE 1 TO SUBPART UUU OF PART 63—METAL HAP EMISSION LIMITS FOR CATALYTIC CRACKING UNITS
TABLE 2 TO SUBPART UUU OF PART 63—OPERATING LIMITS FOR METAL HAP EMISSIONS FROM CATALYTIC CRACKING UNITS
TABLE 3 TO SUBPART UUU OF PART 63—CONTINUOUS MONITORING SYSTEMS FOR METAL HAP EMISSIONS FROM CATALYTIC CRACKING UNITS
TABLE 4 TO SUBPART UUU OF PART 63—REQUIREMENTS FOR PERFORMANCE TESTS FOR METAL HAP EMISSIONS FROM CATALYTIC CRACKING UNITS NOT SUBJECT TO THE NEW SOURCE PERFORMANCE STANDARD (NSPS) FOR PARTICULATE MATTER (PM)
TABLE 5 TO SUBPART UUU OF PART 63—INITIAL COMPLIANCE WITH METAL HAP EMISSION LIMITS FOR CATALYTIC CRACKING UNITS
TABLE 6 TO SUBPART UUU OF PART 63—CONTINUOUS COMPLIANCE WITH METAL HAP EMISSION LIMITS FOR CATALYTIC CRACKING UNITS
TABLE 7 TO SUBPART UUU OF PART 63—CONTINUOUS COMPLIANCE WITH OPERATING LIMITS FOR METAL HAP EMISSIONS FROM CATALYTIC CRACKING UNITS
TABLE 8 TO SUBPART UUU OF PART 63—ORGANIC HAP EMISSION LIMITS FOR CATALYTIC CRACKING UNITS
TABLE 9 TO SUBPART UUU OF PART 63—OPERATING LIMITS FOR ORGANIC HAP EMISSIONS FROM CATALYTIC CRACKING UNITS
TABLE 10 TO SUBPART UUU OF PART 63—CONTINUOUS MONITORING SYSTEMS FOR ORGANIC HAP EMISSIONS FROM CATALYTIC CRACKING UNITS
TABLE 11 TO SUBPART UUU OF PART 63—REQUIREMENTS FOR PERFORMANCE TESTS FOR ORGANIC HAP EMISSIONS FROM CATALYTIC CRACKING UNITS NOT SUBJECT TO THE NEW SOURCE PERFORMANCE STANDARD (NSPS) FOR CARBON MONOXIDE (CO)
TABLE 12 TO SUBPART UUU OF PART 63—INITIAL COMPLIANCE WITH ORGANIC HAP EMISSION LIMITS FOR CATALYTIC CRACKING UNITS
TABLE 13 TO SUBPART UUU OF PART 63—CONTINUOUS COMPLIANCE WITH ORGANIC HAP EMISSION LIMITS FOR CATALYTIC CRACKING UNITS
TABLE 14 TO SUBPART UUU OF PART 63—CONTINUOUS COMPLIANCE WITH OPERATING LIMITS FOR ORGANIC HAP EMISSIONS FROM CATALYTIC CRACKING UNITS
TABLE 15 TO SUBPART UUU OF PART 63—ORGANIC HAP EMISSION LIMITS FOR CATALYTIC REFORMING UNITS
TABLE 16 TO SUBPART UUU OF PART 63—OPERATING LIMITS FOR ORGANIC HAP EMISSIONS FROM CATALYTIC REFORMING UNITS
TABLE 17 TO SUBPART UUU OF PART 63—CONTINUOUS MONITORING SYSTEMS FOR ORGANIC HAP EMISSIONS FROM CATALYTIC REFORMING UNITS
TABLE 18 TO SUBPART UUU OF PART 63—REQUIREMENTS FOR PERFORMANCE TESTS FOR ORGANIC HAP EMISSIONS FROM CATALYTIC REFORMING UNITS
TABLE 19 TO SUBPART UUU OF PART 63—INITIAL COMPLIANCE WITH ORGANIC HAP EMISSION LIMITS FOR CATALYTIC REFORMING UNITS
TABLE 20 TO SUBPART UUU OF PART 63—CONTINUOUS COMPLIANCE WITH ORGANIC HAP EMISSION LIMITS FOR CATALYTIC REFORMING UNITS
TABLE 21 TO SUBPART UUU OF PART 63—CONTINUOUS COMPLIANCE WITH OPERATING LIMITS FOR ORGANIC HAP EMISSIONS FROM CATALYTIC REFORMING UNITS

TABLE 22 TO SUBPART UUU OF PART 63—INORGANIC HAP EMISSION LIMITS FOR CATALYTIC REFORMING UNITS
TABLE 23 TO SUBPART UUU OF PART 63—OPERATING LIMITS FOR INORGANIC HAP EMISSION LIMITATIONS FOR CATALYTIC REFORMING UNITS
TABLE 24 TO SUBPART UUU OF PART 63—CONTINUOUS MONITORING SYSTEMS FOR INORGANIC HAP EMISSIONS FROM CATALYTIC REFORMING UNITS
TABLE 25 TO SUBPART UUU OF PART 63—REQUIREMENTS FOR PERFORMANCE TESTS FOR INORGANIC HAP EMISSIONS FROM CATALYTIC REFORMING UNITS
TABLE 26 TO SUBPART UUU OF PART 63—INITIAL COMPLIANCE WITH INORGANIC HAP EMISSION LIMITS FOR CATALYTIC REFORMING UNITS
TABLE 27 TO SUBPART UUU OF PART 63—CONTINUOUS COMPLIANCE WITH INORGANIC HAP EMISSION LIMITS FOR CATALYTIC REFORMING UNITS
TABLE 28 TO SUBPART UUU OF PART 63—CONTINUOUS COMPLIANCE WITH OPERATING LIMITS FOR INORGANIC HAP EMISSIONS FROM CATALYTIC REFORMING UNITS
TABLE 29 TO SUBPART UUU OF PART 63—HAP EMISSION LIMITS FOR SULFUR RECOVERY UNITS
TABLE 30 TO SUBPART UUU OF PART 63—OPERATING LIMITS FOR HAP EMISSIONS FROM SULFUR RECOVERY UNITS
TABLE 31 TO SUBPART UUU OF PART 63—CONTINUOUS MONITORING SYSTEMS FOR HAP EMISSIONS FROM SULFUR RECOVERY UNITS
TABLE 32 TO SUBPART UUU OF PART 63—REQUIREMENTS FOR PERFORMANCE TESTS FOR HAP EMISSIONS FROM SULFUR RECOVERY UNITS NOT SUBJECT TO THE NEW SOURCE PERFORMANCE STANDARDS (NSPS) FOR SULFUR OXIDES
TABLE 33 TO SUBPART UUU OF PART 63—INITIAL COMPLIANCE WITH HAP EMISSION LIMITS FOR SULFUR RECOVERY UNITS
TABLE 34 TO SUBPART UUU OF PART 63—CONTINUOUS COMPLIANCE WITH HAP EMISSION LIMITS FOR SULFUR RECOVERY UNITS
TABLE 35 TO SUBPART UUU OF PART 63—CONTINUOUS COMPLIANCE WITH OPERATING LIMITS FOR HAP EMISSIONS FROM SULFUR RECOVERY UNITS
TABLE 36 TO SUBPART UUU OF PART 63—WORK PRACTICE STANDARDS FOR HAP EMISSIONS FROM BYPASS LINES
TABLE 37 TO SUBPART UUU OF PART 63—REQUIREMENTS FOR PERFORMANCE TESTS FOR BYPASS LINES
TABLE 38 TO SUBPART UUU OF PART 63—INITIAL COMPLIANCE WITH WORK PRACTICE STANDARDS FOR HAP EMISSIONS FROM BYPASS LINES
TABLE 39 TO SUBPART UUU OF PART 63—CONTINUOUS COMPLIANCE WITH WORK PRACTICE STANDARDS FOR HAP EMISSIONS FROM BYPASS LINES
TABLE 40 TO SUBPART UUU OF PART 63—REQUIREMENTS FOR INSTALLATION, OPERATION, AND MAINTENANCE OF CONTINUOUS OPACITY MONITORING SYSTEMS AND CONTINUOUS EMISSION MONITORING SYSTEMS
TABLE 41 TO SUBPART UUU OF PART 63—REQUIREMENTS FOR INSTALLATION, OPERATION, AND MAINTENANCE OF CONTINUOUS PARAMETER MONITORING SYSTEMS
TABLE 42 TO SUBPART UUU OF PART 63—ADDITIONAL INFORMATION FOR INITIAL NOTIFICATION OF COMPLIANCE STATUS
TABLE 43 TO SUBPART UUU OF PART 63—REQUIREMENTS FOR REPORTS
TABLE 44 TO SUBPART UUU OF PART 63—APPLICABILITY OF NESHAP GENERAL PROVISIONS TO SUBPART UUU

Subpart VVV—National Emission Standards for Hazardous Air Pollutants: Publicly Owned Treatment Works

APPLICABILITY

63.1580 Am I subject to this subpart?
63.1581 Does the subpart distinguish between different types of POTW treatment plants?

INDUSTRIAL POTW TREATMENT PLANT DESCRIPTION AND REQUIREMENTS

63.1582 What are the characteristics of an industrial POTW treatment plant?
63.1583 What are the emission points and control requirements for an industrial POTW treatment plant?
63.1584 When do I have to comply?
63.1585 How does an industrial POTW treatment plant demonstrate compliance?

NON-INDUSTRIAL POTW TREATMENT PLANT REQUIREMENTS

63.1586 What are the emission points and control requirements for a non-industrial POTW treatment plant?
63.1587 When do I have to comply?
63.1588 What inspections must I conduct?
63.1589 What records must I keep?
63.1590 What reports must I submit?

GENERAL REQUIREMENTS

63.1591 What are my notification requirements?
63.1592 Which General Provisions apply to my POTW treatment plant?
63.1593 How will the EPA determine if I am in compliance with this subpart?
63.1594 Who enforces this subpart?
63.1595 List of definitions.

TABLE 1 TO SUBPART VVV—APPLICABILITY OF 40 CFR PART 63 GENERAL PROVISIONS TO SUBPART VVV

Subpart WWW [Reserved]

Subpart XXX—National Emission Standards for Hazardous Air Pollutants for Ferroalloys Production: Ferromanganese and Silicomanganese

63.1620–63.1649 [Reserved]
63.1650 Applicability and compliance dates.
63.1651 Definitions.
63.1652 Emission standards.
63.1653 Opacity standards.
63.1654 Operational and work practice standards.
63.1655 Maintenance requirements.
63.1656 Performance testing, test methods, and compliance demonstrations.
63.1657 Monitoring requirements.
63.1658 Notification requirements.
63.1659 Reporting requirements.
63.1660 Recordkeeping requirements.
63.1661 Delegation of authorities.
63.1662–63.1679 [Reserved]

Subpart CCCC—National Emission Standards for Hazardous Air Pollutants: Manufacturing of Nutritional Yeast

WHAT THIS SUBPART COVERS

Sec.
63.2130 What is the purpose of this subpart?
63.2131 Am I subject to this subpart?
63.2132 What parts of my plant does this subpart cover?
63.2133 When do I have to comply with this subpart?

EMISSION LIMITATIONS

63.2140 What emission limitations must I meet?

GENERAL COMPLIANCE REQUIREMENTS

63.2150 What are my general requirements for complying with this subpart?

TESTING AND INITIAL COMPLIANCE REQUIREMENTS

63.2160 By what date must I conduct an initial compliance demonstration?
63.2161 What performance tests and other procedures must I use if I monitor brew ethanol?
63.2162 When must I conduct subsequent performance tests?
63.2163 If I monitor fermenter exhaust, what are my monitoring installation, operation, and maintenance requirements?
63.2164 If I monitor brew ethanol, what are my monitoring installation, operation, and maintenance requirements?
63.2165 How do I demonstrate initial compliance with the emission limitations if I monitor fermenter exhaust?
63.2166 How do I demonstrate initial compliance with the emission limitations if I monitor brew ethanol?

CONTINUOUS COMPLIANCE REQUIREMENTS

63.2170 How do I monitor and collect data to demonstrate continuous compliance?
63.2171 How do I demonstrate continuous compliance with the emission limitations?

NOTIFICATIONS, REPORTS, AND RECORDS

63.2180 What notifications must I submit and when?
63.2181 What reports must I submit and when?
63.2182 What records must I keep?
63.2183 In what form and how long must I keep my records?

OTHER REQUIREMENTS AND INFORMATION

63.2190 What parts of the General Provisions apply to me?
63.2191 Who implements and enforces this subpart?
63.2192 What definitions apply to this subpart?
TABLE 1 TO SUBPART CCCC—EMISSION LIMITATIONS
TABLE 2 TO SUBPART CCCC—REQUIREMENTS FOR PERFORMANCE TESTS (BREW ETHANOL MONITORING ONLY)
TABLE 3 TO SUBPART CCCC—INITIAL COMPLIANCE WITH EMISSION LIMITATIONS
TABLE 4 TO SUBPART CCCC—CONTINUOUS COMPLIANCE WITH EMISSION LIMITATIONS
TABLE 5 TO SUBPART CCCC—REQUIREMENTS FOR REPORTS
TABLE 6 TO SUBPART CCCC—APPLICABILITY OF GENERAL PROVISIONS TO SUBPART CCCC

Subpart GGGG—National Emission Standards for Hazardous Air Pollutants: Solvent Extraction for Vegetable Oil Production

WHAT THIS SUBPART COVERS

63.2830 What is the purpose of this subpart?
63.2831 Where can I find definitions of key words used in this subpart?
63.2832 Am I subject to this subpart?
63.2833 Is my source categorized as existing or new?
63.2834 When do I have to comply with the standards in this subpart?

STANDARDS

63.2840 What emission requirements must I meet?

COMPLIANCE REQUIREMENTS

63.2850 How do I comply with the hazardous air pollutant emission standards?
63.2851 What is a plan for demonstrating compliance?

63.2852 What is a startup, shutdown, and malfunction plan?
63.2853 How do I determine the actual solvent loss?
63.2854 How do I determine the weighted average volume fraction of HAP in the actual solvent loss?
63.2855 How do I determine the quantity of oilseed processed?

NOTIFICATIONS, REPORTS, AND RECORDS

63.2860 What notifications must I submit and when?
63.2861 What reports must I submit and when?
63.2862 What records must I keep?
63.2863 In what form and how long must I keep my records?

OTHER REQUIREMENTS AND INFORMATION

63.2870 What parts of the General Provisions apply to me?
63.2871 Who implements and enforces this subpart?
63.2872 What definitions apply to this subpart?

Subpart HHHH—National Emission Standards for Hazardous Air Pollutants for Wet-Formed Fiberglass Mat Production

WHAT THIS SUBPART COVERS

Sec.
63.2980 What is the purpose of this subpart?
63.2981 Does this subpart apply to me?
63.2982 What parts of my plant does this subpart cover?

EMISSION LIMITATIONS

63.2983 What emission limits must I meet?
63.2984 What operating limits must I meet?
63.2985 When do I have to comply with these standards?
63.2986 How do I comply with the standards?

OPERATION, MAINTENANCE, AND MONITORING PLAN

63.2987 What must my operation, maintenance, and monitoring (OMM) plan include?
63.2988 [Reserved]
63.2989 How do I change my (OMM) plan?
63.2990 Can I conduct short-term experimental production runs that cause parameters to deviate from operating limits?

TESTING AND INITIAL COMPLIANCE REQUIREMENTS

63.2991 When must I conduct performance tests?
63.2992 How do I conduct a performance test?
63.2993 What test methods must I use in conducting performance tests?
63.2994 How do I verify the performance of monitoring equipment?
63.2995 What equations must I use to determine compliance?

MONITORING REQUIREMENTS

63.2996 What must I monitor?
63.2997 What are the requirements for monitoring devices?

NOTIFICATIONS, REPORTS, AND RECORDS

63.2998 What records must I maintain?
63.2999 In what form and for how long must I maintain records?
63.3000 What notifications and reports must I submit?

OTHER REQUIREMENTS AND INFORMATION

63.3001 What sections of the general provisions apply to me?
63.3002 Who implements and enforces this subpart?
63.3003 Incorporation by reference.
63.3004 What definitions apply to this subpart?
63.3005—63.3079 [Reserved]

TABLE 1 TO SUBPART HHHH—MINIMUM REQUIREMENTS FOR MONITORING AND RECORDKEEPING
TABLE 2 TO SUBPART HHHH—APPLICABILITY OF GENERAL PROVISIONS (40 CFR PART 63, SUBPART A) TO SUBPART HHHH
APPENDIX A TO SUBPART HHHH—METHOD FOR DETERMINING FREE-FORMALDEHYDE IN UREA-FORMALDEHYDE RESINS BY SODIUM SULFITE (ICED & COOLED)
APPENDIX B TO SUBPART HHHH—METHOD FOR THE DETERMINATION OF LOSS-ON-IGNITION

Subpart SSSS—National Emission Standards for Hazardous Air Pollutants: Surface Coating of Metal Coil

WHAT THIS SUBPART COVERS

Sec.
63.5080 What is in this subpart?
63.5090 Does this subpart apply to me?
63.5100 Which of my emissions sources are affected by this subpart?
63.5110 What special definitions are used in this subpart?

EMISSION STANDARDS AND COMPLIANCE DATES

63.5120 What emission standards must I meet?
63.5121 What operating limits must I meet?
63.5130 When must I comply?

GENERAL REQUIREMENTS FOR COMPLIANCE WITH THE EMISSION STANDARDS AND FOR MONITORING AND PERFORMANCE TESTS

63.5140 What general requirements must I meet to comply with the standards?

63.5150 If I use a control device to comply with the emission standards, what monitoring must I do?
63.5160 What performance tests must I complete?

REQUIREMENTS FOR SHOWING COMPLIANCE

63.5170 How do I demonstrate compliance with the standards?

REPORTING AND RECORDKEEPING

63.5180 What reports must I submit?
63.5190 What records must I maintain?

DELEGATION OF AUTHORITY

63.5200 What authorities may be delegated to the States?
63.5201–63.5209 [Reserved]

TABLES TO SUBPART SSSS OF PART 63
TABLE 1 TO SUBPART SSSS OF PART 63—OPERATING LIMITS IF USING ADD-ON CONTROL DEVICES AND CAPTURE SYSTEM
TABLE 2 TO SUBPART SSSS OF PART 63—APPLICABILITY OF GENERAL PROVISIONS TO SUBPART SSSS

Subpart TTTT—National Emission Standards for Hazardous Air Pollutants for Leather Finishing Operations

WHAT THIS SUBPART COVERS

Sec.
63.5280 What is the purpose of this subpart?
63.5285 Am I subject to this subpart?
63.5290 What parts of my facility does this subpart cover?
63.5295 When do I have to comply with this subpart?

STANDARDS

63.5305 What emission standards must I meet?

COMPLIANCE REQUIREMENTS

63.5320 How does my affected major source comply with the HAP emission standards?
63.5325 What is a plan for demonstrating compliance and when must I have one in place?
63.5330 How do I determine the compliance ratio?
63.5335 How do I determine the actual HAP loss?
63.5340 How do I determine the allowable HAP loss?
63.5345 How do I distinguish between the two upholstery product process operations?
63.5350 How do I distinguish between the water-resistant/specialty and nonwater-resistant leather product process operations?
63.5355 How do I monitor and collect data to demonstrate continuous compliance?
63.5360 How do I demonstrate continuous compliance with the emission standards?

TESTING AND INITIAL COMPLIANCE REQUIREMENTS

63.5375 When must I conduct a performance test or initial compliance demonstration?
63.5380 How do I conduct performance tests?
63.5385 How do I measure the quantity of finish applied to the leather?
63.5390 How do I measure the HAP content of a finish?
63.5395 How do I measure the density of a finish?
63.5400 How do I measure the quantity of leather processed?

NOTIFICATIONS, REPORTS, AND RECORDS

63.5415 What notifications must I submit and when?
63.5420 What reports must I submit and when?
63.5425 When must I start recordkeeping to determine my compliance ratio?
63.5430 What records must I keep?
63.5435 In what form and how long must I keep my records?

OTHER REQUIREMENTS AND INFORMATION

63.5450 What parts of the General Provisions apply to me?
63.5455 Who administers this subpart?
63.5460 What definitions apply to this subpart?

FIGURE 1 TO SUBPART TTTT OF PART 63—EXAMPLE LOGS FOR RECORDING LEATHER FINISH USE AND HAP CONTENT
TABLES TO SUBPART TTTT OF PART 63
TABLE 1 TO SUBPART TTTT OF PART 63—LEATHER FINISHING HAP EMISSION LIMITS FOR DETERMINING THE ALLOWABLE HAP LOSS
TABLE 2 TO SUBPART TTTT OF PART 63—APPLICABILITY OF GENERAL PROVISIONS TO SUBPART TTTT

Subpart UUUU—National Emission Standards for Hazardous Air Pollutants for Cellulose Products Manufacturing

WHAT THIS SUBPART COVERS

Sec.
63.5480 What is the purpose of this subpart?
63.5485 Am I subject to this subpart?
63.5490 What parts of my plant does this subpart cover?
63.5495 When do I have to comply with this subpart?

EMISSION LIMITS, OPERATING LIMITS, AND WORK PRACTICE STANDARDS

63.5505 What emission limits, operating limits, and work practice standards must I meet?

GENERAL COMPLIANCE REQUIREMENTS

63.5515 What are my general requirements for complying with this subpart?

TESTING AND INITIAL COMPLIANCE REQUIREMENTS

63.5530 How do I demonstrate initial compliance with the emission limits and work practice standards?
63.5535 What performance tests and other procedures must I use?
63.5540 By what date must I conduct a performance test or other initial compliance demonstration?
63.5545 What are my monitoring installation, operation, and maintenance requirements?

CONTINUOUS COMPLIANCE REQUIREMENTS

63.5555 How do I demonstrate continuous compliance with the emission limits, operating limits, and work practice standards?
63.5560 How do I monitor and collect data to demonstrate continuous compliance?

NOTIFICATIONS, REPORTS, AND RECORDS

63.5575 What notifications must I submit and when?
63.5580 What reports must I submit and when?
63.5585 What records must I keep?
63.5590 In what form and how long must I keep my records?

OTHER REQUIREMENTS AND INFORMATION

63.5595 What compliance options do I have if part of my affected source is subject to both this subpart and another subpart?
63.5600 What other requirements apply to me?
63.5605 Who implements and enforces this subpart?
63.5610 What definitions apply to this subpart?

TABLES TO SUBPART UUUU OF PART 63

TABLE 1 TO SUBPART UUUU OF PART 63—EMISSION LIMITS AND WORK PRACTICE STANDARDS
TABLE 2 TO SUBPART UUUU OF PART 63—OPERATING LIMITS
TABLE 3 TO SUBPART UUUU OF PART 63—INITIAL COMPLIANCE WITH EMISSION LIMITS AND WORK PRACTICE STANDARDS
TABLE 4 TO SUBPART UUUU OF PART 63—REQUIREMENTS FOR PERFORMANCE TESTS
TABLE 5 TO SUBPART UUUU OF PART 63—CONTINUOUS COMPLIANCE WITH EMISSION LIMITS AND WORK PRACTICE STANDARDS
TABLE 6 TO SUBPART UUUU OF PART 63—CONTINUOUS COMPLIANCE WITH OPERATING LIMITS
TABLE 7 TO SUBPART UUUU OF PART 63—REQUIREMENTS FOR NOTIFICATIONS
TABLE 8 TO SUBPART UUUU OF PART 63—REQUIREMENTS FOR REPORTS
TABLE 9 TO SUBPART UUUU OF PART 63—REQUIREMENTS FOR RECORDKEEPING
TABLE 10 TO SUBPART UUUU OF PART 63—APPLICABILITY OF GENERAL PROVISIONS TO SUBPART UUUU

Subpart VVVV—National Emission Standards for Hazardous Air Pollutants for Boat Manufacturing

WHAT THE SUBPART COVERS

Sec.
63.5680 What is the purpose of this subpart?
63.5683 Does this subpart apply to me?
63.5686 How do I demonstrate that my facility is not a major source?
63.5689 What parts of my facility are covered by this subpart?
63.5692 How do I know if my boat manufacturing facility is a new source or an existing source?
63.5695 When must I comply with this subpart?

STANDARDS FOR OPEN MOLDING RESIN AND GEL COAT OPERATIONS

63.5698 What emission limit must I meet for open molding resin and gel coat operations?
63.5701 What are my options for complying with the open molding emission limit?
63.5704 What are the general requirements for complying with the open molding emission limit?
63.5707 What is an implementation plan for open molding operations and when do I need to prepare one?
63.5710 How do I demonstrate compliance using emissions averaging?
63.5713 How do I demonstrate compliance using compliant materials?
63.5714 How do I demonstrate compliance if I use filled resins?

DEMONSTRATING COMPLIANCE FOR OPEN MOLDING OPERATIONS CONTROLLED BY ADD-ON CONTROL DEVICES

63.5715 What operating limits must I meet?
63.5716 When must I conduct a performance test?
63.5719 How do I conduct a performance test?
63.5722 How do I use the performance test data to demonstrate initial compliance?
63.5725 What are the requirements for monitoring and demonstrating continuous compliance?

STANDARDS FOR CLOSED MOLDING RESIN OPERATIONS

63.5728 What standards must I meet for closed molding resin operations?

STANDARDS FOR RESIN AND GEL COAT MIXING OPERATIONS

63.5731 What standards must I meet for resin and gel coat mixing operations?

STANDARDS FOR RESIN AND GEL COAT APPLICATION EQUIPMENT CLEANING OPERATIONS

63.5734 What standards must I meet for resin and gel coat application equipment cleaning operations?
63.5737 How do I demonstrate compliance with the resin and gel coat application equipment cleaning standards?

STANDARDS FOR CARPET AND FABRIC ADHESIVE OPERATIONS

63.5740 What emission limit must I meet for carpet and fabric adhesive operations?

STANDARDS FOR ALUMINUM RECREATIONAL BOAT SURFACE COATING OPERATIONS

63.5743 What standards must I meet for aluminum recreational boat surface coating operations?
63.5746 How do I demonstrate compliance with the emission limits for aluminum wipedown solvents and aluminum coatings?
63.5749 How do I calculate the organic HAP content of aluminum wipedown solvents?
63.5752 How do I calculate the organic HAP content of aluminum recreational boat surface coatings?
63.5753 How do I calculate the combined organic HAP content of aluminum wipedown solvents and aluminum recreational boat surface coatings?
63.5755 How do I demonstrate compliance with the aluminum recreational boat surface coating spray gun cleaning work practice standards?

METHODS FOR DETERMINING HAZARDOUS AIR POLLUTANT CONTENT

63.5758 How do I determine the organic HAP content of materials?

NOTIFICATIONS, REPORTS, AND RECORDS

63.5761 What notifications must I submit and when?
63.5764 What reports must I submit and when?
63.5767 What records must I keep?
63.5770 In what form and for how long must I keep my records?

OTHER INFORMATION YOU NEED TO KNOW

63.5773 What parts of the General Provisions apply to me?
63.5776 Who implements and enforces this subpart?

DEFINITIONS

63.5779 What definitions apply to this subpart?

TABLE 1 TO SUBPART VVVV—COMPLIANCE DATES FOR NEW AND EXISTING BOAT MANUFACTURING FACILITIES
TABLE 2 TO SUBPART VVVV—ALTERNATIVE HAP CONTENT REQUIREMENTS FOR OPEN MOLDING RESIN AND GEL COAT OPERATIONS
TABLE 3 TO SUBPART VVVV—MACT MODEL POINT VALUE FORMULAS FOR OPEN MOLDING OPERATIONS
TABLE 4 TO SUBPART VVVV—OPERATING LIMITS IF USING AN ADD-ON CONTROL DEVICE FOR OPEN MOLDING OPERATIONS
TABLE 5 TO SUBPART VVVV—DEFAULT ORGANIC HAP CONTENTS OF SOLVENTS AND SOLVENT BLENDS
TABLE 6 TO SUBPART VVVV—DEFAULT ORGANIC HAP CONTENTS OF PETROLEUM SOLVENT GROUPS
TABLE 7 TO SUBPART VVVV—APPLICABILITY AND TIMING OF NOTIFICATIONS
TABLE 8 TO SUBPART VVVV—APPLICABILITY OF GENERAL PROVISIONS (40 CFR PART 63, SUBPART A) TO SUBPART VVVV
APPENDIX A TO PART 63—TEST METHODS
APPENDIX B TO PART 63—SOURCES DEFINED FOR EARLY REDUCTION PROVISIONS
APPENDIX C TO PART 63—DETERMINATION OF THE FRACTION BIODEGRADED (F_{bio}) IN A BIOLOGICAL TREATMENT UNIT
APPENDIX D TO PART 63—ALTERNATIVE VALIDATION PROCEDURE FOR EPA WASTE AND WASTEWATER METHODS
APPENDIX E TO PART 63—MONITORING PROCEDURE FOR NONTHOROUGHLY MIXED OPEN BIOLOGICAL TREATMENT SYSTEMS AT KRAFT PULP MILLS UNDER UNSAFE SAMPLING CONDITIONS

AUTHORITY: 42 U.S.C. 7401 *et seq.*

SOURCE: 57 FR 61992, Dec. 29, 1992, unless otherwise noted.

Subpart EEE—National Emission Standards for Hazardous Air Pollutants from Hazardous Waste Combustors

SOURCE: 64 FR 53038, Sept. 30, 1999, unless otherwise noted.

GENERAL

§ 63.1200 Who is subject to these regulations?

The provisions of this subpart apply to all hazardous waste combustors: hazardous waste incinerators, hazardous waste burning cement kilns,

and hazardous waste burning lightweight aggregate kilns, except as provided in Table 1 of this section. Hazardous waste combustors are also subject to applicable requirements under parts 260–270 of this chapter.

(a) *What if I am an area source?* (1) Both area sources and major sources are subject to this subpart.

(2) Both area sources and major sources, not previously subject to title V, are immediately subject to the requirement to apply for and obtain a title V permit in all States, and in areas covered by part 71 of this chapter.

(b) These regulations in this subpart do not apply to sources that meet the criteria in Table 1 of this Section, as follows:

TABLE 1 TO § 63.1200.—HAZARDOUS WASTE COMBUSTORS EXEMPT FROM SUBPART EEE

If	And if	Then
(1) You are a previously affected source.	(i) You ceased feeding hazardous waste for a period of time greater than the hazardous waste residence time (i.e., hazardous waste no longer resides in the combustion chamber);. (ii) You have initiated the closure requirements of subpart G, parts 264 or 265 of this chapter;. (iii) You begin complying with the requirements of all other applicable standards of this part (Part 63); and. (iv) You notify the Administrator in writing that you are no longer an affected source under this subpart (Subpart EEE).	You are no longer subject to this subpart (Subpart EEE).
(2) You are a research, development, and demonstration source.	You operate for no longer than one year after first burning hazardous waste (Note that the Administrator can extend this one-year restriction on a case-by-case basis upon your written request documenting when you first burned hazardous waste and the justification for needing additional time to perform research, development, or demonstration operations)..	You are not subject to this subpart (Subpart EEE). This exemption applies even if there is a hazardous waste combustor at the plant site that is regulated under this subpart. You still, however, remain subject to § 270.65 of this chapter.
(3) The only hazardous wastes you burn are exempt from regulation under § 266.100(c) of this chapter.	.....	You are not subject to the requirements of this subpart (Subpart EEE).

(c) Table 1 of this section specifies the provisions of subpart A (General Provisions, §§ 63.1–63.15) that apply and those that do not apply to sources affected by this subpart.

[64 FR 53038, Sept. 30, 1999, as amended at 65 FR 42297, July 10, 2000; 67 FR 6986, Feb. 14, 2002]

§ 63.1201 Definitions and acronyms used in this subpart.

(a) The terms used in this subpart are defined in the Act, in subpart A of this part, or in this section as follows:

Air pollution control system means the equipment used to reduce the release of particulate matter and other pollutants to the atmosphere.

Automatic waste feed cutoff (AWFCO) system means a system comprised of cutoff valves, actuator, sensor, data manager, and other necessary components and electrical circuitry designed, operated and maintained to stop the flow of hazardous waste to the combustion unit automatically and immediately (except as provided by § 63.1206(c)(3)(viii)) when any operating requirement is exceeded.

By-pass duct means a device which diverts a minimum of 10 percent of a cement kiln's off gas, or a device which the Administrator determines on a case-by-case basis diverts a sample of kiln gas that contains levels of carbon monoxide or hydrocarbons representative of the levels in the kiln.

Combustion chamber means the area in which controlled flame combustion of hazardous waste occurs.

Continuous monitor means a device which continuously samples the regulated parameter specified in § 63.1209 without interruption, evaluates the detector response at least once every 15 seconds, and computes and records the average value at least every 60 seconds,

except during allowable periods of calibration and except as defined otherwise by the CEMS Performance Specifications in appendix B, part 60 of this chapter.

Dioxin/furan and dioxins and furans mean tetra-, penta-, hexa-, hepta-, and octa-chlorinated dibenzo dioxins and furans.

Existing source means any affected source that is not a new source.

Feedrate operating limits means limits on the feedrate of materials (*e.g.*, metals, chlorine) to the combustor that are established based on comprehensive performance testing. The limits are established and monitored by knowing the concentration of the limited material (*e.g.*, chlorine) in each feedstream and the flowrate of each feedstream.

Feedstream means any material fed into a hazardous waste combustor, including, but not limited to, any pumpable or nonpumpable solid, liquid, or gas.

Flowrate means the rate at which a feedstream is fed into a hazardous waste combustor.

Hazardous waste is defined in § 261.3 of this chapter.

Hazardous waste burning cement kiln means a rotary kiln and any associated preheater or precalciner devices that produce clinker by heating limestone and other materials for subsequent production of cement for use in commerce, and that burns hazardous waste at any time.

Hazardous waste combustor means a hazardous waste incinerator, hazardous waste burning cement kiln, or hazardous waste burning lightweight aggregate kiln.

Hazardous waste incinerator means a device defined as an incinerator in § 260.10 of this chapter and that burns hazardous waste at any time. For purposes of this subpart, the hazardous waste incinerator includes all associated firing systems and air pollution control devices, as well as the combustion chamber equipment.

Hazardous waste lightweight aggregate kiln means a rotary kiln that produces clinker by heating materials such as slate, shale and clay for subsequent production of lightweight aggregate used in commerce, and that burns hazardous waste at any time.

Hazardous waste residence time means the time elapsed from cutoff of the flow of hazardous waste into the combustor (including, for example, the time required for liquids to flow from the cutoff valve into the combustor) until solid, liquid, and gaseous materials from the hazardous waste (excluding residues that may adhere to combustion chamber surfaces and excluding waste-derived recycled materials such as cement kiln dust and internally recycled metals) exit the combustion chamber. For combustors with multiple firing systems whereby the residence time may vary for the firing systems, the hazardous waste residence time for purposes of complying with this subpart means the longest residence time for any firing system in use at the time of the waste cutoff.

Initial comprehensive performance test means the comprehensive performance test that is used as the basis for initially demonstrating compliance with the standards.

In-line kiln raw mill means a hazardous waste burning cement kiln design whereby kiln gas is ducted through the raw material mill for portions of time to facilitate drying and heating of the raw material.

Instantaneous monitoring means continuously sampling, detecting, and recording the regulated parameter without use of an averaging period.

Monovent means an exhaust configuration of a building or emission control device (*e.g.* positive pressure fabric filter) that extends the length of the structure and has a width very small in relation to its length (*i.e.*, length to width ratio is typically greater than 5:1). The exhaust may be an open vent with or without a roof, louvered vents, or a combination of such features.

MTEC means maximum theoretical emissions concentration of metals or HCl/Cl, expressed as μg/dscm, and is calculated by dividing the feedrate by the gas flowrate.

New source means any affected source the construction or reconstruction of which is commenced after April 19, 1996.

One-minute average means the average of detector responses calculated at least every 60 seconds from responses obtained at least every 15 seconds.

Operating record means a documentation retained at the facility for ready inspection by authorized officials of all information required by the standards to document and maintain compliance with the applicable regulations, including data and information, reports, notifications, and communications with regulatory officials.

Operating requirements means operating terms or conditions, limits, or operating parameter limits developed under this subpart that ensure compliance with the emission standards.

Preheater tower combustion gas monitoring location means a location within the preheater tower of a dry process cement kiln downstream (in terms of gas flow) of all hazardous waste firing locations and where a representative sample of combustion gas to measure combustion efficiency can be monitored.

Raw material feed means the prepared and mixed materials, which include but are not limited to materials such as limestone, clay, shale, sand, iron ore, mill scale, cement kiln dust and flyash, that are fed to a cement or lightweight aggregate kiln. Raw material feed does not include the fuels used in the kiln to produce heat to form the clinker product.

Research, development, and demonstration source means a source engaged in laboratory, pilot plant, or prototype demonstration operations:

(1) Whose primary purpose is to conduct research, development, or short-term demonstration of an innovative and experimental hazardous waste treatment technology or process; and

(2) Where the operations are under the close supervision of technically-trained personnel.

Rolling average means the average of all one-minute averages over the averaging period.

Run means the net period of time during which an air emission sample is collected under a given set of operating conditions. Three or more runs constitutes a test. Unless otherwise specified, a run may be either intermittent or continuous.

Run average means the average of the one-minute average parameter values for a run.

TEQ means toxicity equivalence, the international method of relating the toxicity of various dioxin/furan congeners to the toxicity of 2,3,7,8-tetrachlorodibenzo-p-dioxin.

You means the owner or operator of a hazardous waste combustor.

(b) The acronyms used in this subpart refer to the following:

AWFCO means automatic waste feed cutoff.

CAS means chemical abstract services registry.

CEMS means continuous emissions monitoring system.

CMS means continuous monitoring system.

DRE means destruction and removal efficiency.

MACT means maximum achievable control technology.

MTEC means maximum theoretical emissions concentration.

NIC means notification of intent to comply.

[64 FR 53038, Sept. 30, 1999, as amended at 65 FR 42297, July 10, 2000; 65 FR 67271, Nov. 9, 2000; 66 FR 35103, July 3, 2001; 67 FR 6987, Feb. 14, 2002]

§ 63.1202 [Reserved]

EMISSIONS STANDARDS AND OPERATING LIMITS

§ 63.1203 What are the standards for hazardous waste incinerators?

(a) *Emission limits for existing sources.* You must not discharge or cause combustion gases to be emitted into the atmosphere that contain:

(1) For dioxins and furans:

(i) Emissions in excess of 0.20 ng TEQ/dscm corrected to 7 percent oxygen; or

(ii) Emissions in excess of 0.40 ng TEQ/dscm corrected to 7 percent oxygen provided that the combustion gas temperature at the inlet to the initial particulate matter control device is 400 °F or lower based on the average of the test run average temperatures. (For purposes of compliance, operation of a wet particulate control device is presumed to meet the 400 °F or lower requirement);

(2) Mercury in excess of 130 μg/dscm corrected to 7 percent oxygen;

(3) Lead and cadmium in excess of 240 μg/dscm, combined emissions, corrected to 7 percent oxygen;

(4) Arsenic, beryllium, and chromium in excess of 97 μg/dscm, combined emissions, corrected to 7 percent oxygen;

(5) For carbon monoxide and hydrocarbons, either:

(i) Carbon monoxide in excess of 100 parts per million by volume, over an hourly rolling average (monitored continuously with a continuous emissions monitoring system), dry basis and corrected to 7 percent oxygen. If you elect to comply with this carbon monoxide standard rather than the hydrocarbon standard under paragraph (a)(5)(ii) of this section, you must also document that, during the destruction and removal efficiency (DRE) test runs or their equivalent as provided by § 63.1206(b)(7), hydrocarbons do not exceed 10 parts per million by volume during those runs, over an hourly rolling average (monitored continuously with a continuous emissions monitoring system), dry basis, corrected to 7 percent oxygen, and reported as propane; or

(ii) Hydrocarbons in excess of 10 parts per million by volume, over an hourly rolling average (monitored continuously with a continuous emissions monitoring system), dry basis, corrected to 7 percent oxygen, and reported as propane;

(6) Hydrochloric acid and chlorine gas in excess of 77 parts per million by volume, combined emissions, expressed as hydrochloric acid equivalents, dry basis and corrected to 7 percent oxygen; and

(7) Particulate matter in excess of 34 mg/dscm corrected to 7 percent oxygen.

(b) *Emission limits for new sources.* You must not discharge or cause combustion gases to be emitted into the atmosphere that contain:

(1) Dioxins and furans in excess of 0.20 ng TEQ/dscm, corrected to 7 percent oxygen;

(2) Mercury in excess of 45 μg/dscm corrected to 7 percent oxygen;

(3) Lead and cadmium in excess of 120 μg/dscm, combined emissions, corrected to 7 percent oxygen;

(4) Arsenic, beryllium, and chromium in excess of 97 μg/dscm, combined emissions, corrected to 7 percent oxygen;

(5) For carbon monoxide and hydrocarbons, either:

(i) Carbon monoxide in excess of 100 parts per million by volume, over an hourly rolling average (monitored continuously with a continuous emissions monitoring system), dry basis and corrected to 7 percent oxygen. If you elect to comply with this carbon monoxide standard rather than the hydrocarbon standard under paragraph (b)(5)(ii) of this section, you must also document that, during the destruction and removal efficiency (DRE) test runs or their equivalent as provided by § 63.1206(b)(7), hydrocarbons do not exceed 10 parts per million by volume during those runs, over an hourly rolling average (monitored continuously with a continuous emissions monitoring system), dry basis, corrected to 7 percent oxygen, and reported as propane; or

(ii) Hydrocarbons in excess of 10 parts per million by volume, over an hourly rolling average (monitored continuously with a continuous emissions monitoring system), dry basis, corrected to 7 percent oxygen, and reported as propane;

(6) Hydrochloric acid and chlorine gas in excess of 21 parts per million by volume, combined emissions, expressed as hydrochloric acid equivalents, dry basis and corrected to 7 percent oxygen; and

(7) Particulate matter in excess of 34 mg/dscm corrected to 7 percent oxygen.

(c) *Destruction and removal efficiency (DRE) standard.* (1) *99.99% DRE.* Except as provided in paragraph (c)(2) of this section, you must achieve a destruction and removal efficiency (DRE) of 99.99% for each principle organic hazardous constituent (POHC) designated under paragraph (c)(3) of this section. You must calculate DRE for each POHC from the following equation:

$$DRE = [1 - (W_{out} / W_{in})] \times 100\%$$

Where:

W_{in} = mass feedrate of one principal organic hazardous constituent (POHC) in a waste feedstream; and

W_{out} = mass emission rate of the same POHC present in exhaust emissions prior to release to the atmosphere.

(2) *99.9999% DRE.* If you burn the dioxin-listed hazardous wastes F020, F021, F022, F023, F026, or F027 (see § 261.31 of this chapter), you must

achieve a destruction and removal efficiency (DRE) of 99.9999% for each principle organic hazardous constituent (POHC) that you designate under paragraph (c)(3) of this section. You must demonstrate this DRE performance on POHCs that are more difficult to incinerate than tetra-, penta-, and hexachlorodibenzo-*p*-dioxins and dibenzofurans. You must use the equation in paragraph (c)(1) of this section to calculate DRE for each POHC. In addition, you must notify the Administrator of your intent to incinerate hazardous wastes F020, F021, F022, F023, F026, or F027.

(3) *Principal organic hazardous constituents (POHCs)*. (i) You must treat the Principal Organic Hazardous Constituents (POHCs) in the waste feed that you specify under paragraph (c)(3)(ii) of this section to the extent required by paragraphs (c)(1) and (c)(2) of this section.

(ii) You must specify one or more POHCs from the list of hazardous air pollutants established by 42 U.S.C. 7412(b)(1), excluding caprolactam (CAS number 105602) as provided by § 63.60, for each waste to be burned. You must base this specification on the degree of difficulty of incineration of the organic constituents in the waste and on their concentration or mass in the waste feed, considering the results of waste analyses or other data and information.

(d) *Significant figures*. The emission limits provided by paragraphs (a) and (b) of this section are presented with two significant figures. Although you must perform intermediate calculations using at least three significant figures, you may round the resultant emission levels to two significant figures to document compliance.

[67 FR 6809, Feb. 13, 2002]

§ 63.1204 What are the standards for hazardous waste burning cement kilns?

(a) *Emission limits for existing sources*. You must not discharge or cause combustion gases to be emitted into the atmosphere that contain:

(1) For dioxins and furans:

(i) Emissions in excess of 0.20 ng TEQ/dscm corrected to 7 percent oxygen; or

(ii) Emissions in excess of 0.40 ng TEQ/dscm corrected to 7 percent oxygen provided that the combustion gas temperature at the inlet to the initial dry particulate matter control device is 400 °F or lower based on the average of the test run average temperatures;

(2) Mercury in excess of 120 μg/dscm corrected to 7 percent oxygen;

(3) Lead and cadmium in excess of 330 μg/dscm, combined emissions, corrected to 7 percent oxygen;

(4) Arsenic, beryllium, and chromium in excess of 56 μg/dscm, combined emissions, corrected to 7 percent oxygen;

(5) *Carbon monoxide and hydrocarbons*. (i) For kilns equipped with a by-pass duct or midkiln gas sampling system, either:

(A) Carbon monoxide in the by-pass duct or mid-kiln gas sampling system in excess of 100 parts per million by volume, over an hourly rolling average (monitored continuously with a continuous emissions monitoring system), dry basis and corrected to 7 percent oxygen. If you elect to comply with this carbon monoxide standard rather than the hydrocarbon standard under paragraph (a)(5)(i)(B) of this section, you must also document that, during the destruction and removal efficiency (DRE) test runs or their equivalent as provided by § 63.1206(b)(7), hydrocarbons in the by-pass duct or mid-kiln gas sampling system do not exceed 10 parts per million by volume during those runs, over an hourly rolling average (monitored continuously with a continuous emissions monitoring system), dry basis, corrected to 7 percent oxygen, and reported as propane; or

(B) Hydrocarbons in the by-pass duct or midkiln gas sampling system in excess of 10 parts per million by volume, over an hourly rolling average (monitored continuously with a continuous emissions monitoring system), dry basis, corrected to 7 percent oxygen, and reported as propane;

(ii) For kilns not equipped with a by-pass duct or midkiln gas sampling system, either:

(A) Hydrocarbons in the main stack in excess of 20 parts per million by volume, over an hourly rolling average (monitored continuously with a continuous emissions monitoring system),

dry basis, corrected to 7 percent oxygen, and reported as propane; or

(B) Carbon monoxide in the main stack in excess of 100 parts per million by volume, over an hourly rolling average (monitored continuously with a continuous emissions monitoring system), dry basis and corrected to 7 percent oxygen. If you elect to comply with this carbon monoxide standard rather than the hydrocarbon standard under paragraph (a)(5)(ii)(A) of this section, you also must document that, during the destruction and removal efficiency (DRE) test runs or their equivalent as provided by § 63.1206(b)(7), hydrocarbons in the main stack do not exceed 20 parts per million by volume during those runs, over an hourly rolling average (monitored continuously with a continuous emissions monitoring system), dry basis, corrected to 7 percent oxygen, and reported as propane.

(6) Hydrochloric acid and chlorine gas in excess of 130 parts per million by volume, combined emissions, expressed as hydrochloric acid equivalents, dry basis, corrected to 7 percent oxygen; and

(7) Particulate matter in excess of 0.15 kg/Mg dry feed and opacity greater than 20 percent.

(i) You must use suitable methods to determine the kiln raw material feedrate.

(ii) Except as provided in paragraph (a)(7)(iii) of this section, you must compute the particulate matter emission rate, E, from the following equation:

$$E = (C_s \times Q_{sd}) / P$$

Where:

E = emission rate of particulate matter, kg/Mg of kiln raw material feed;

C_s = concentration of particulate matter, kg/dscm;

Q_{sd} = volumetric flowrate of effluent gas, dscm/hr; and

P = total kiln raw material feed (dry basis), Mg/hr.

(iii) If you operate a preheater or preheater/precalciner kiln with dual stacks, you must test simultaneously and compute the combined particulate matter emission rate, E_c, from the following equation:

$$E_c = (C_{sk} \times Q_{sdk} + C_{sb} \times Q_{sdb}) / P$$

Where:

E_c = the combined emission rate of particulate matter from the kiln and bypass stack, kg/Mg of kiln raw material feed;

C_{sk} = concentration of particulate matter in the kiln effluent, kg/dscm;

Q_{sdk} = volumetric flowrate of kiln effluent gas, dscm/hr;

C_{sb} = concentration of particulate matter in the bypass stack effluent, kg/dscm;

Q_{sdb} = volumetric flowrate of bypass stack effluent gas, dscm/hr; and

P = total kiln raw material feed (dry basis), Mg/hr.

(b) *Emission limits for new sources.* You must not discharge or cause combustion gases to be emitted into the atmosphere that contain:

(1) For dioxins and furans:

(i) Emissions in excess of 0.20 ng TEQ/dscm corrected to 7 percent oxygen; or

(ii) Emissions in excess of 0.40 ng TEQ/dscm corrected to 7 percent oxygen provided that the combustion gas temperature at the inlet to the initial dry particulate matter control device is 400 °F or lower based on the average of the test run average temperatures;

(2) Mercury in excess of 120 μg/dscm corrected to 7 percent oxygen;

(3) Lead and cadmium in excess of 180 μg/dscm, combined emissions, corrected to 7 percent oxygen;

(4) Arsenic, beryllium, and chromium in excess of 54 μg/dscm, combined emissions, corrected to 7 percent oxygen;

(5) *Carbon monoxide and hydrocarbons.* (i) For kilns equipped with a by-pass duct or midkiln gas sampling system, carbon monoxide and hydrocarbons emissions are limited in both the bypass duct or midkiln gas sampling system and the main stack as follows:

(A) Emissions in the by-pass or midkiln gas sampling system are limited to either:

(1) Carbon monoxide in excess of 100 parts per million by volume, over an hourly rolling average (monitored continuously with a continuous emissions monitoring system), dry basis and corrected to 7 percent oxygen. If you elect to comply with this carbon monoxide standard rather than the hydrocarbon standard under paragraph (b)(5)(i)(A)(*2*)

of this section, you also must document that, during the destruction and removal efficiency (DRE) test runs or their equivalent as provided by §63.1206(b)(7), hydrocarbons do not exceed 10 parts per million by volume during those runs, over an hourly rolling average (monitored continuously with a continuous emissions monitoring system), dry basis, corrected to 7 percent oxygen, and reported as propane; or

(*2*) Hydrocarbons in the by-pass duct or midkiln gas sampling system in excess of 10 parts per million by volume, over an hourly rolling average (monitored continuously with a continuous emissions monitoring system), dry basis, corrected to 7 percent oxygen, and reported as propane; and

(B) Hydrocarbons in the main stack are limited, if construction of the kiln commenced after April 19, 1996 at a plant site where a cement kiln (whether burning hazardous waste or not) did not previously exist, to 50 parts per million by volume, over a 30-day block average (monitored continuously with a continuous monitoring system), dry basis, corrected to 7 percent oxygen, and reported as propane.

(ii) For kilns not equipped with a bypass duct or midkiln gas sampling system, hydrocarbons and carbon monoxide are limited in the main stack to either:

(A) Hydrocarbons not exceeding 20 parts per million by volume, over an hourly rolling average (monitored continuously with a continuous emissions monitoring system), dry basis, corrected to 7 percent oxygen, and reported as propane; or

(B)(*1*) Carbon monoxide not exceeding 100 parts per million by volume, over an hourly rolling average (monitored continuously with a continuous emissions monitoring system), dry basis, corrected to 7 percent oxygen; and

(*2*) Hydrocarbons not exceeding 20 parts per million by volume, over an hourly rolling average (monitored continuously with a continuous monitoring system), dry basis, corrected to 7 percent oxygen, and reported as propane at any time during the destruction and removal efficiency (DRE) test runs or their equivalent as provided by §63.1206(b)(7); and

(*3*) If construction of the kiln commenced after April 19, 1996 at a plant site where a cement kiln (whether burning hazardous waste or not) did not previously exist, hydrocarbons are limited to 50 parts per million by volume, over a 30-day block average (monitored continuously with a continuous monitoring system), dry basis, corrected to 7 percent oxygen, and reported as propane.

(6) Hydrochloric acid and chlorine gas in excess of 86 parts per million, combined emissions, expressed as hydrochloric acid equivalents, dry basis and corrected to 7 percent oxygen; and

(7) Particulate matter in excess of 0.15 kg/Mg dry feed and opacity greater than 20 percent.

(i) You must use suitable methods to determine the kiln raw material feedrate.

(ii) Except as provided in paragraph (a)(7)(iii) of this section, you must compute the particulate matter emission rate, E, from the equation specified in paragraph (a)(7)(ii) of this section.

(iii) If you operate a preheater or preheater/precalciner kiln with dual stacks, you must test simultaneously and compute the combined particulate matter emission rate, E_c, from the equation specified in paragraph (a)(7)(iii) of this section.

(c) *Destruction and removal efficiency (DRE) standard.* (1) *99.99% DRE.* Except as provided in paragraph (c)(2) of this section, you must achieve a destruction and removal efficiency (DRE) of 99.99% for each principle organic hazardous constituent (POHC) designated under paragraph (c)(3) of this section. You must calculate DRE for each POHC from the following equation:

$$DRE = [1 - (W_{out} / W_{in})] \times 100\%$$

Where:

W_{in} = mass feedrate of one principal organic hazardous constituent (POHC) in a waste feedstream; and

W_{out} = mass emission rate of the same POHC present in exhaust emissions prior to release to the atmosphere.

(2) *99.9999% DRE.* If you burn the dioxin-listed hazardous wastes F020, F021, F022, F023, F026, or F027 (see §261.31 of this chapter), you must

achieve a destruction and removal efficiency (DRE) of 99.9999% for each principle organic hazardous constituent (POHC) that you designate under paragraph (c)(3) of this section. You must demonstrate this DRE performance on POHCs that are more difficult to incinerate than tetra-, penta-, and hexachlorodibenzo-*p*-dioxins and dibenzofurans. You must use the equation in paragraph (c)(1) of this section to calculate DRE for each POHC. In addition, you must notify the Administrator of your intent to incinerate hazardous wastes F020, F021, F022, F023, F026, or F027.

(3) *Principal organic hazardous constituents (POHCs).* (i) You must treat the Principal Organic Hazardous Constituents (POHCs) in the waste feed that you specify under paragraph (c)(3)(ii) of this section to the extent required by paragraphs (c)(1) and (c)(2) of this section.

(ii) You must specify one or more POHCs from the list of hazardous air pollutants established by 42 U.S.C. 7412(b)(1), excluding caprolactam (CAS number 105602) as provided by § 63.60, for each waste to be burned. You must base this specification on the degree of difficulty of incineration of the organic constituents in the waste and on their concentration or mass in the waste feed, considering the results of waste analyses or other data and information.

(d) *Cement kilns with in-line kiln raw mills.* (1) *General.* (i) You must conduct performance testing when the raw mill is on-line and when the mill is off-line to demonstrate compliance with the emission standards, and you must establish separate operating parameter limits under § 63.1209 for each mode of operation, except as provided by paragraph (d)(1)(iv) of this section.

(ii) You must document in the operating record each time you change from one mode of operation to the alternate mode and begin complying with the operating parameter limits for that alternate mode of operation.

(iii) You must calculate rolling averages for operating parameter limits as provided by § 63.1209(q)(2).

(iv) If your in-line kiln raw mill has dual stacks, you may assume that the dioxin/furan emission levels in the by-pass stack and the operating parameter limits determined during performance testing of the by-pass stack when the raw mill is off-line are the same as when the mill is on-line.

(2) *Emissions averaging.* You may comply with the mercury, semivolatile metal, low volatile metal, and hydrochloric acid/chlorine gas emission standards on a time-weighted average basis under the following procedures:

(i) *Averaging methodology.* You must calculate the time-weighted average emission concentration with the following equation:

$$C_{total} = \{C_{mill\text{-}off} \times (T_{mill\text{-}off} / (T_{mill\text{-}off} + T_{mill\text{-}on}))\} + \{C_{mill\text{-}on} \times (T_{mill\text{-}on} / (T_{mill\text{-}off} + T_{mill\text{-}on}))\}$$

Where:

C_{total} = time-weighted average concentration of a regulated constituent considering both raw mill on time and off time;

$C_{mill\text{-}off}$ = average performance test concentration of regulated constituent with the raw mill off-line;

$C_{mill\text{-}on}$ = average performance test concentration of regulated constituent with the raw mill on-line;

$T_{mill\text{-}off}$ = time when kiln gases are not routed through the raw mill; and

$T_{mill\text{-}on}$ = time when kiln gases are routed through the raw mill.

(ii) *Compliance.* (A) If you use this emission averaging provision, you must document in the operating record compliance with the emission standards on an annual basis by using the equation provided by paragraph (d)(2) of this section.

(B) Compliance is based on one-year block averages beginning on the day you submit the initial notification of compliance.

(iii) *Notification.* (A) If you elect to document compliance with one or more emission standards using this emission averaging provision, you must notify the Administrator in the initial comprehensive performance test plan submitted under § 63.1207(e).

(B) You must include historical raw mill operation data in the performance test plan to estimate future raw mill down-time and document in the performance test plan that estimated emissions and estimated raw mill

down-time will not result in an exceedance of an emission standard on an annual basis.

(C) You must document in the notification of compliance submitted under § 63.1207(j) that an emission standard will not be exceeded based on the documented emissions from the performance test and predicted raw mill downtime.

(e) *Preheater or preheater/precalciner kilns with dual stacks.* (1) *General.* You must conduct performance testing on each stack to demonstrate compliance with the emission standards, and you must establish operating parameter limits under § 63.1209 for each stack, except as provided by paragraph (d)(1)(iv) of this section for dioxin/furan emissions testing and operating parameter limits for the by-pass stack of in-line raw mills.

(2) *Emissions averaging.* You may comply with the mercury, semivolatile metal, low volatile metal, and hydrochloric acid/chlorine gas emission standards specified in this section on a gas flowrate-weighted average basis under the following procedures:

(i) *Averaging methodology.* You must calculate the gas flowrate-weighted average emission concentration using the following equation:

$$C_{tot} = \{C_{main} \times (Q_{main} / (Q_{main} + Q_{bypass}))\} + \{C_{bypass} \times (Q_{bypass} / (Q_{main} + Q_{bypass}))\}$$

Where:

C_{tot} = gas flowrate-weighted average concentration of the regulated constituent;

C_{main} = average performance test concentration demonstrated in the main stack;

C_{bypass} = average performance test concentration demonstrated in the bypass stack;

Q_{main} = volumetric flowrate of main stack effluent gas; and

Q_{bypass} = volumetric flowrate of bypass effluent gas.

(ii) *Compliance.* (A) You must demonstrate compliance with the emission standard(s) using the emission concentrations determined from the performance tests and the equation provided by paragraph (e)(1) of this section; and

(B) You must develop operating parameter limits for bypass stack and main stack flowrates that ensure the emission concentrations calculated with the equation in paragraph (e)(1) of this section do not exceed the emission standards on a 12-hour rolling average basis. You must include these flowrate limits in the Notification of Compliance.

(iii) *Notification.* If you elect to document compliance under this emissions averaging provision, you must:

(A) Notify the Administrator in the initial comprehensive performance test plan submitted under § 63.1207(e). The performance test plan must include, at a minimum, information describing the flowrate limits established under paragraph (e)(2)(ii)(B) of this section; and

(B) Document in the Notification of Compliance submitted under § 63.1207(j) the demonstrated gas flowrate-weighted average emissions that you calculate with the equation provided by paragraph (e)(2) of this section.

(f) *Significant figures.* The emission limits provided by paragraphs (a) and (b) of this section are presented with two significant figures. Although you must perform intermediate calculations using at least three significant figures, you may round the resultant emission levels to two significant figures to document compliance.

(g) [Reserved]

(h) When you comply with the particulate matter requirements of paragraphs (a)(7) or (b)(7) of this section, you are exempt from the New Source Performance Standard for particulate matter and opacity under § 60.60 of this chapter.

[67 FR 6809, Feb. 13, 2002, as amended at 67 FR 6987, Feb. 14, 2002]

§ 63.1205 What are the standards for hazardous waste burning lightweight aggregate kilns?

(a) *Emission limits for existing sources.* You must not discharge or cause combustion gases to be emitted into the atmosphere that contain:

(1) For dioxins and furans:

(i) Emissions in excess of 0.20 ng TEQ/dscm corrected to 7 percent oxygen; or

(ii) Rapid quench of the combustion gas temperature at the exit of the (last) combustion chamber (or exit of any waste heat recovery system) to 400 °F or lower based on the average of the test run average temperatures. You

must also notify in writing the RCRA authority that you are complying with this option;

(2) Mercury in excess of 120 μg/dscm corrected to 7 percent oxygen;

(3) Lead and cadmium in excess of 250 μg/dscm, combined emissions, corrected to 7 percent oxygen;

(4) Arsenic, beryllium, and chromium in excess of 110 μg/dscm, combined emissions, corrected to 7 percent oxygen;

(5) *Carbon monoxide and hydrocarbons.* (i) Carbon monoxide in excess of 100 parts per million by volume, over an hourly rolling average (monitored continuously with a continuous emissions monitoring system), dry basis and corrected to 7 percent oxygen. If you elect to comply with this carbon monoxide standard rather than the hydrocarbon standard under paragraph (a)(5)(ii) of this section, you also must document that, during the destruction and removal efficiency (DRE) test runs or their equivalent as provided by § 63.1206(b)(7), hydrocarbons do not exceed 20 parts per million by volume during those runs, over an hourly rolling average (monitored continuously with a continuous emissions monitoring system), dry basis, corrected to 7 percent oxygen, and reported as propane; or

(ii) Hydrocarbons in excess of 20 parts per million by volume, over an hourly rolling average, dry basis, corrected to 7 percent oxygen, and reported as propane;

(6) Hydrochloric acid and chlorine gas in excess of 600 parts per million by volume, combined emissions, expressed as hydrochloric acid equivalents, dry basis and corrected to 7 percent oxygen; and

(7) Particulate matter in excess of 57 mg/dscm corrected to 7 percent oxygen.

(b) *Emission limits for new sources.* You must not discharge or cause combustion gases to be emitted into the atmosphere that contain:

(1) For dioxins and furans:

(i) Emissions in excess of 0.20 ng TEQ/dscm corrected to 7 percent oxygen; or

(ii) Rapid quench of the combustion gas temperature at the exit of the (last) combustion chamber (or exit of any waste heat recovery system) to 400 °F or lower based on the average of the test run average temperatures. You must also notify in writing the RCRA authority that you are complying with this option;

(2) Mercury in excess of 120 μg/dscm corrected to 7 percent oxygen;

(3) Lead and cadmium in excess of 43 μg/dscm, combined emissions, corrected to 7 percent oxygen;

(4) Arsenic, beryllium, and chromium in excess of 110 μg/dscm, combined emissions, corrected to 7 percent oxygen;

(5) *Carbon monoxide and hydrocarbons.* (i) Carbon monoxide in excess of 100 parts per million by volume, over an hourly rolling average (monitored continuously with a continuous emissions monitoring system), dry basis and corrected to 7 percent oxygen. If you elect to comply with this carbon monoxide standard rather than the hydrocarbon standard under paragraph (b)(5)(ii) of this section, you also must document that, during the destruction and removal efficiency (DRE) test runs or their equivalent as provided by § 63.1206(b)(7), hydrocarbons do not exceed 20 parts per million by volume during those runs, over an hourly rolling average (monitored continuously with a continuous emissions monitoring system), dry basis, corrected to 7 percent oxygen, and reported as propane; or

(ii) Hydrocarbons in excess of 20 parts per million by volume, over an hourly rolling average, dry basis, corrected to 7 percent oxygen, and reported as propane;

(6) Hydrochloric acid and chlorine gas in excess of 41 parts per million by volume, combined emissions, expressed as hydrochloric acid equivalents, dry basis and corrected to 7 percent oxygen; and

(7) Particulate matter in excess of 57 mg/dscm corrected to 7 percent oxygen.

(c) *Destruction and removal efficiency (DRE) standard.* (1) *99.99% DRE.* Except as provided in paragraph (c)(2) of this section, you must achieve a destruction and removal efficiency (DRE) of 99.99% for each principal organic hazardous constituent (POHC) designated under paragraph (c)(3) of this section. You must calculate DRE for each POHC from the following equation:

$$DRE = [1—(W_{out} / W_{in})] \times 100\%$$

Where:

W_{in} = mass feedrate of one principal organic hazardous constituent (POHC) in a waste feedstream; and

W_{out} = mass emission rate of the same POHC present in exhaust emissions prior to release to the atmosphere.

(2) *99.9999% DRE.* If you burn the dioxin-listed hazardous wastes F020, F021, F022, F023, F026, or F027 (see § 261.31 of this chapter), you must achieve a destruction and removal efficiency (DRE) of 99.9999% for each principal organic hazardous constituent (POHC) that you designate under paragraph (c)(3) of this section. You must demonstrate this DRE performance on POHCs that are more difficult to incinerate than tetra-, penta-, and hexachlorodibenzo-dioxins and dibenzofurans. You must use the equation in paragraph (c)(1) of this section to calculate DRE for each POHC. In addition, you must notify the Administrator of your intent to burn hazardous wastes F020, F021, F022, F023, F026, or F027.

(3) *Principal organic hazardous constituents (POHCs).* (i) You must treat the Principal Organic Hazardous Constituents (POHCs) in the waste feed that you specify under paragraph (c)(3)(ii) of this section to the extent required by paragraphs (c)(1) and (c)(2) of this section.

(ii) You must specify one or more POHCs from the list of hazardous air pollutants established by 42 U.S.C. 7412(b)(1), excluding caprolactam (CAS number 105602) as provided by § 63.60, for each waste to be burned. You must base this specification on the degree of difficulty of incineration of the organic constituents in the waste and on their concentration or mass in the waste feed, considering the results of waste analyses or other data and information.

(d) *Significant figures.* The emission limits provided by paragraphs (a) and (b) of this section are presented with two significant figures. Although you must perform intermediate calculations using at least three significant figures, you may round the resultant emission levels to two significant figures to document compliance.

[67 FR 6812, Feb. 13, 2002]

MONITORING AND COMPLIANCE PROVISIONS

§ 63.1206 When and how must you comply with the standards and operating requirements?

(a) *Compliance dates*—(1) *Compliance date for existing sources.* You must comply with the standards of this subpart no later than the compliance date, September 30, 2003, unless the Administrator grants you an extension of time under § 63.6(i) or § 63.1213.

(2) *New or reconstructed sources.* (i) If you commenced construction or reconstruction of your hazardous waste combustor after April 19, 1996, you must comply with this subpart by the later of September 30, 1999 or the date the source starts operations, except as provided by paragraph (a)(2)(ii) of this section. The costs of retrofitting and replacement of equipment that is installed specifically to comply with this subpart, between April 19, 1996 and a source's compliance date, are not considered to be reconstruction costs.

(ii) For a standard in this subpart that is more stringent than the standard proposed on April 19, 1996, you may achieve compliance no later than September 30, 2003 if you comply with the standard proposed on April 19, 1996 after September 30, 1999. This exception does not apply, however, to new or reconstructed area source hazardous waste combustors that become major sources after September 30, 1999. As provided by § 63.6(b)(7), such sources must comply with this subpart at startup.

(3) *Early compliance.* If you choose to comply with the emission standards of this subpart prior to September 30, 2003, your compliance date is the date you postmark the Notification of Compliance under § 63.1207(j)(1).

(b) *Compliance with standards*—(1) *Applicability.* The emission standards and operating requirements set forth in this subpart apply at all times except:

(i) During periods of startup, shutdown, and malfunction; and

(ii) When hazardous waste is not in the combustion chamber (i.e., the hazardous waste feed to the combustor has been cut off for a period of time not less than the hazardous waste residence time) and you have documented

in the operating record that you are complying with all otherwise applicable requirements and standards promulgated under authority of sections 112 (e.g., subpart LLL of this part for cement kilns) or 129 of the Clean Air Act in lieu of the emission standards of §§ 63.1203 through 63.1205; the monitoring and compliance standards of this section and §§ 63.1207 through 63.1209, except the modes of operation requirements of § 63.1209(q); and the notification, reporting, and recordkeeping requirements of §§ 63.1210 through 63.1212.

(2) *Methods for determining compliance.* The Administrator will determine compliance with the emission standards of this subpart as provided by § 63.6(f)(2). Conducting performance testing under operating conditions representative of the extreme range of normal conditions is consistent with the requirements of §§ 63.6(f)(2)(iii)(B) and 63.7(e)(1) to conduct performance testing under representative operating conditions.

(3) *Finding of compliance.* The Administrator will make a finding concerning compliance with the emission standards and other requirements of this subpart as provided by § 63.6(f)(3).

(4) *Extension of compliance with emission standards.* The Administrator may grant an extension of compliance with the emission standards of this subpart as provided by §§ 63.6(i) and 63.1213.

(5) *Changes in design, operation, or maintenance*—(i) *Changes that may adversely affect compliance.* If you plan to change (as defined in paragraph (b)(5)(iii) of this section) the design, operation, or maintenance practices of the source in a manner that may adversely affect compliance with any emission standard that is not monitored with a CEMS:

(A) *Notification.* You must notify the Administrator at least 60 days prior to the change, unless you document circumstances that dictate that such prior notice is not reasonably feasible. The notification must include:

(*1*) A description of the changes and which emission standards may be affected; and

(*2*) A comprehensive performance test schedule and test plan under the requirements of § 63.1207(f) that will document compliance with the affected emission standard(s);

(B) *Performance test.* You must conduct a comprehensive performance test under the requirements of §§ 63.1207(f)(1) and (g)(1) to document compliance with the affected emission standard(s) and establish operating parameter limits as required under § 63.1209, and submit to the Administrator a Notification of Compliance under §§ 63.1207(j) and 63.1210(d); and

(C) *Restriction on waste burning.* (*1*) Except as provided by paragraph (b)(5)(i)(C)(*2*) of this section, after the change and prior to submitting the notification of compliance, you must not burn hazardous waste for more than a total of 720 hours (renewable at the discretion of the Administrator) and only for the purposes of pretesting or comprehensive performance testing. Pretesting is defined at § 63.1207(h)(2)(i) and (ii).

(2) You may petition the Administrator to obtain written approval to burn hazardous waste in the interim prior to submitting a Notification of Compliance for purposes other than testing or pretesting. You must specify operating requirements, including limits on operating parameters, that you determine will ensure compliance with the emission standards of this subpart based on available information. The Administrator will review, modify as necessary, and approve if warranted the interim operating requirements.

(ii) *Changes that will not affect compliance.* If you determine that a change will not adversely affect compliance with the emission standards or operating requirements, you must document the change in the operating record upon making such change. You must revise as necessary the performance test plan, Documentation of Compliance, Notification of Compliance, and start-up, shutdown, and malfunction plan to reflect these changes.

(iii) *Definition of ''change.''* For purposes of paragraph (b)(5) of this section, ''change'' means any change in design, operation, or maintenance practices that were documented in the comprehensive performance test plan, Notification of Compliance, or startup, shutdown, and malfunction plan.

(6) *Compliance with the carbon monoxide and hydrocarbon emission standards.* This paragraph applies to sources that elect to comply with the carbon monoxide and hydrocarbon emissions standards under §§ 63.1203 through 63.1205 by documenting continuous compliance with the carbon monoxide standard using a continuous emissions monitoring system and documenting compliance with the hydrocarbon standard during the destruction and removal efficiency (DRE) performance test or its equivalent.

(i) If a DRE test performed pursuant to § 63.1207(c)(2) is acceptable as documentation of compliance with the DRE standard, you may use the highest hourly rolling average hydrocarbon level achieved during the DRE test runs to document compliance with the hydrocarbon standard. An acceptable DRE test is any test for which the data and results are determined to meet quality assurance objectives (on a site-specific basis) such that the results adequately demonstrate compliance with the DRE standard.

(ii) If during this acceptable DRE test you did not obtain hydrocarbon emissions data sufficient to document compliance with the hydrocarbon standard, you must either:

(A) Perform, as part of the performance test, an ''equivalent DRE test'' to document compliance with the hydrocarbon standard. An equivalent DRE test is comprised of a minimum of three runs each with a minimum duration of one hour during which you operate the combustor as close as reasonably possible to the operating parameter limits that you established based on the initial DRE test. You must use the highest hourly rolling average hydrocarbon emission level achieved during the equivalent DRE test to document compliance with the hydrocarbon standard; or

(B) Perform a DRE test as part of the performance test.

(7) *Compliance with the DRE standard.* (i) Except as provided in paragraphs (b)(7)(ii) and (b)(7)(iii) of this section:

(A) You must document compliance with the Destruction and Removal Efficiency (DRE) standard under §§ 63.1203 through 63.1205 only once provided that you do not modify the source after the DRE test in a manner that could affect the ability of the source to achieve the DRE standard.

(B) You may use any DRE test data that documents that your source achieves the required level of DRE provided:

(*1*) You have not modified the design or operation of your source in a manner that could effect the ability of your source to achieve the DRE standard since the DRE test was performed; and,

(*2*) The DRE test data meet quality assurance objectives determined on a site-specific basis.

(ii) Sources that feed hazardous waste at a location in the combustion system other than the normal flame zone must demonstrate compliance with the DRE standard during each comprehensive performance test;

(iii) For sources that do not use DRE previous testing to document conformance with the DRE standard pursuant to § 63.1207(c)(2), you must perform DRE testing during the initial comprehensive performance test.

(8) *Applicability of particulate matter and opacity standards during particulate matter CEMS correlation tests.* (i) Any particulate matter and opacity standards of parts 60, 61, 63, 264, 265, and 266 of this chapter (*i.e.*, any title 40 particulate or opacity standards) applicable to a hazardous waste combustor do not apply while you conduct particulate matter continuous emissions monitoring system (CEMS) correlation tests (*i.e.*, correlation with manual stack methods) under the conditions of paragraphs (b)(8)(iii) through (vii) of this section.

(ii) Any permit or other emissions or operating parameter limits or conditions, including any limitation on workplace practices, that are applicable to hazardous waste combustors to ensure compliance with any particulate matter and opacity standards of parts 60, 61, 63, 264, 265, and 266 of this chapter (*i.e.*, any title 40 particulate or opacity standards) do not apply while you conduct particulate matter CEMS correlation tests under the conditions of paragraphs (b)(8)(iii) through (vii) of this section.

(iii) For the provisions of this section to apply, you must:

(A) Develop a particulate matter CEMS correlation test plan that includes the following information. This test plan may be included as part of the comprehensive performance test plan required under §§ 63.1207(e) and (f):

(*1*) Number of test conditions and number of runs for each test condition;

(*2*) Target particulate matter emission level for each test condition;

(*3*) How you plan to modify operations to attain the desired particulate matter emission levels; and

(*4*) Anticipated normal particulate matter emission levels; and

(B) Submit the test plan to the Administrator for approval at least 90 calendar days before the correlation test is scheduled to be conducted.

(iv) The Administrator will review and approve/disapprove the correlation test plan under the procedures for review and approval of the site-specific test plan provided by § 63.7(c)(3)(i) and (iii). If the Administrator fails to approve or disapprove the correlation test plan within the time period specified by § 63.7(c)(3)(i), the plan is considered approved, unless the Administrator has requested additional information.

(v) The particulate matter and opacity standards and associated operating limits and conditions will not be waived for more than 96 hours, in the aggregate, for a correlation test, including all runs of all test conditions, unless more time is approved by the Administrator.

(vi) The stack sampling team must be on-site and prepared to perform correlation testing no later than 24 hours after you modify operations to attain the desired particulate matter emissions concentrations, unless you document in the correlation test plan that a longer period of conditioning is appropriate.

(vii) You must return to operating conditions indicative of compliance with the applicable particulate matter and opacity standards as soon as possible after correlation testing is completed.

(9) *Alternative standards for existing or new hazardous waste burning lightweight aggregate kilns using MACT.* (i) You may petition the Administrator to recommend alternative semivolatile metal, low volatile metal, mercury, or hydrochloric acid/chlorine gas emission standards if:

(A) You cannot achieve one or more of these standards while using maximum achievable control technology (MACT) because of the raw material contribution to emissions of the regulated metals or hydrochloric acid/chlorine gas; or

(B) You determine that mercury is not present at detectable levels in your raw material.

(ii) The alternative standard that you recommend under paragraph (b)(9)(i)(A) of this section may be an operating requirement, such as a hazardous waste feedrate limitation for metals and/or chlorine, and/or an emission limitation.

(iii) The alternative standard must include a requirement to use MACT, or better, applicable to the standard for which the source is seeking relief, as defined in paragraphs (b)(9)(viii) and (ix) of this section.

(iv) *Documentation required.* (A) The alternative standard petition you submit under paragraph (b)(9)(i)(A) of this section must include data or information documenting that raw material contributions to emissions of the regulated metals or hydrochloric acid/chlorine gas prevent you from complying with the emission standard even though the source is using MACT, as defined in paragraphs (b)(9)(viii) and (ix) of this section, for the standard for which you are seeking relief.

(B) Alternative standard petitions that you submit under paragraph (b)(9)(i)(B) of this section must include data or information documenting that mercury is not present at detectable levels in raw materials.

(v) You must include data or information with semivolatile metal and low volatility metal alternative standard petitions that you submit under paragraph (b)(9)(i)(A) of this section documenting that increased chlorine feedrates associated with the burning of hazardous waste, when compared to non-hazardous waste operations, do not significantly increase metal emissions attributable to raw materials.

(vi) You must include data or information with semivolatile metal, low volatile metal, and hydrochloric acid/

chlorine gas alternative standard petitions that you submit under paragraph (b)(9)(i)(A) of this section documenting that semivolatile metal, low volatile metal, and hydrochloric acid/chlorine gas emissions attributable to the hazardous waste only will not exceed the emission standards in § 63.1205(a) and (b).

(vii) You must not operate pursuant to your recommended alternative standards in lieu of emission standards specified in § 63.1205(a) and (b):

(A) Unless the Administrator approves the provisions of the alternative standard petition request or establishes other alternative standards; and

(B) Until you submit a revised Notification of Compliance that incorporates the revised standards.

(viii) For purposes of this alternative standard provision, MACT for existing hazardous waste burning lightweight aggregate kilns is defined as:

(A) For mercury, a hazardous waste feedrate corresponding to an MTEC of 24μg/dscm or less;

(B) For semivolatile metals, a hazardous waste feedrate corresponding to an MTEC of 280,000 μg/dscm or less, and use of a particulate matter control device that achieves particulate matter emissions of 57 mg/dscm or less;

(C) For low volatile metals, a hazardous waste feedrate corresponding to an MTEC of 120,000 μg/dscm or less, and use of a particulate matter control device that achieves particulate matter emissions of 57 mg/dscm or less; and

(D) For hydrochloric acid/chlorine gas, a hazardous waste chlorine feedrate corresponding to an MTEC of 2,000,000 μg/dscm or less, and use of an air pollution control device with a hydrochloric acid/chlorine gas removal efficiency of 85 percent or greater.

(ix) For purposes of this alternative standard provision, MACT for new hazardous waste burning lightweight aggregate kilns is defined as:

(A) For mercury, a hazardous waste feedrate corresponding to an MTEC of 4 μg/dscm or less;

(B) For semivolatile metals, a hazardous waste feedrate corresponding to an MTEC of 280,000 μg/dscm or less, and use of a particulate matter control device that achieves particulate matter emissions of 57 mg/dscm or less;

(C) For low volatile metals, a hazardous waste feedrate corresponding to an MTEC of 46,000 μg/dscm or less, and use of a particulate matter control device that achieves particulate matter emissions of 57 mg/dscm or less;

(D) For hydrochloric acid/chlorine gas, a hazardous waste chlorine feedrate corresponding to an MTEC of 14,000,000 μg/dscm or less, and use of a wet scrubber with a hydrochloric acid/chlorine gas removal efficiency of 99.6 percent or greater.

(10) *Alternative standards for existing or new hazardous waste burning cement kilns using MACT.* (i) You may petition the Administrator to recommend alternative semivolatile, low volatile metal, mercury, and/or hydrochloric acid/chlorine gas emission standards if:

(A) You cannot achieve one or more of these standards while using maximum achievable control technology (MACT) because of raw material contributions to emissions of the regulated metals or hydrochloric acid/chlorine gas; or (B) You determine that mercury is not present at detectable levels in your raw material.

(ii) The alternative standard that you recommend under paragraph (b)(10)(i)(A) of this section may be an operating requirement, such as a hazardous waste feedrate limitation for metals and/or chlorine, and/or an emission limitation.

(iii) The alternative standard must include a requirement to use MACT, or better, applicable to the standard for which the source is seeking relief, as defined in paragraphs (b)(10)(viii) and (ix) of this section.

(iv) *Documentation required.* (A) The alternative standard petition you submit under paragraph (b)(10)(i)(A) of this section must include data or information documenting that raw material contributions to emissions prevent you from complying with the emission standard even though the source is using MACT, as defined in paragraphs (b)(10)(viii) and (ix) of this section, for the standard for which you are seeking relief.

(B) Alternative standard petitions that you submit under paragraph (b)(10)(i)(B) of this section must include data or information documenting

that mercury is not present at detectable levels in raw materials.

(v) You must include data or information with semivolatile metal and low volatile metal alternative standard petitions that you submit under paragraph (b)(10)(i)(A) of this section documenting that increased chlorine feedrates associated with the burning of hazardous waste, when compared to non-hazardous waste operations, do not significantly increase metal emissions attributable to raw materials.

(vi) You must include data or information with semivolatile metal, low volatile metal, and hydrochloric acid/chlorine gas alternative standard petitions that you submit under paragraph (b)(10)(i)(A) of this section documenting that emissions of the regulated metals and hydrochloric acid/chlorine gas attributable to the hazardous waste only will not exceed the emission standards in § 63.1204(a) and (b).

(vii) You must not operate pursuant to your recommended alternative standards in lieu of emission standards specified in § 63.1204(a) and (b):

(A) Unless the Administrator approves the provisions of the alternative standard petition request or establishes other alternative standards; and

(B) Until you submit a revised Notification of Compliance that incorporates the revised standards.

(viii) For purposes of this alternative standard provision, MACT for existing hazardous waste burning cement kilns is defined as:

(A) For mercury, a hazardous waste feedrate corresponding to an MTEC of 88μg/dscm or less;

(B) For semivolatile metals, a hazardous waste feedrate corresponding to an MTEC of 31,000 μg/dscm or less, and use of a particulate matter control device that achieves particulate matter emissions of 0.15 kg/Mg dry feed or less;

(C) For low volatile metals, a hazardous waste feedrate corresponding to an MTEC of 54,000 μg/dscm or less, and use of a particulate matter control device that achieves particulate matter emissions of 0.15 kg/Mg dry feed or less; and

(D) For hydrochloric acid/chlorine gas, a hazardous waste chlorine feedrate corresponding to an MTEC of 720,000 μg/dscm or less.

(ix) For purposes of this alternative standard provision, MACT for new hazardous waste burning cement kilns is defined as:

(A) For mercury, a hazardous waste feedrate corresponding to an MTEC of 7 μg/dscm or less;

(B) For semivolatile metals, a hazardous waste feedrate corresponding to an MTEC of 31,000 μg/dscm or less, and use of a particulate matter control device that achieves particulate matter emissions of 0.15 kg/Mg dry feed or less;

(C) For low volatile metals, a hazardous waste feedrate corresponding to an MTEC of 15,000 μg/dscm or less, and use of a particulate matter control device that achieves particulate matter emissions of 0.15 kg/Mg dry feed or less;

(D) For hydrochloric acid/chlorine gas, a hazardous waste chlorine feedrate corresponding to an MTEC of 420,000 μg/dscm or less.

(11) *Calculation of hazardous waste residence time.* You must calculate the hazardous waste residence time and include the calculation in the performance test plan under § 63.1207(f) and the operating record. You must also provide the hazardous waste residence time in the Documentation of Compliance under § 63.1211(c) and the Notification of Compliance under §§ 63.1207(j) and 63.1210(b).

(12) *Documenting compliance with the standards based on performance testing.* (i) You must conduct a minimum of three runs of a performance test required under § 63.1207 to document compliance with the emission standards of this subpart.

(ii) You must document compliance with the emission standards based on the arithmetic average of the emission results of each run, except that you must document compliance with the destruction and removal efficiency standard for each run of the comprehensive performance test individually.

(13) *Cement kilns and lightweight aggregate kilns that feed hazardous waste at a location other than the end where products are normally discharged and where fuels are normally fired.*

(i) Cement kilns that feed hazardous waste at a location other than the end

where products are normally discharged and where fuels are normally fired must comply with the carbon monoxide and hydrocarbon standards of §63.1204 as follows:

(A) For existing sources, you must not discharge or cause combustion gases to be emitted into the atmosphere that contain either:

(*1*) Hydrocarbons in the main stack in excess of 20 parts per million by volume, over an hourly rolling average (monitored continuously with a continuous emissions monitoring system), dry basis, corrected to 7 percent oxygen, and reported as propane; or

(*2*) Hydrocarbons both in the by-pass duct and at a preheater tower combustion gas monitoring location in excess of 10 parts per million by volume, at each location, over an hourly rolling average (monitored continuously with a continuous emissions monitoring system), dry basis, corrected to 7 percent oxygen, and reported as propane; or

(*3*) If the only firing location of hazardous waste upstream (in terms of gas flow) of the point where combustion gases are diverted into the bypass duct is at the kiln end where products are normally discharged, then both hydrocarbons at the preheater tower combustion gas monitoring location in excess of 10 parts per million by volume, over an hourly rolling average (monitored continuously with a continuous emissions monitoring system), dry basis, corrected to 7 percent oxygen, and reported as propane, and either hydrocarbons in the by-pass duct in excess of 10 parts per million by volume, over an hourly rolling average (monitored continuously with a continuous emissions monitoring system), dry basis, corrected to 7 percent oxygen, and reported as propane, or carbon monoxide in excess of 100 parts per million by volume, over an hourly rolling average (monitored continuously with a continuous emissions monitoring system), dry basis, and corrected to 7 percent oxygen. If you comply with the carbon monoxide standard of 100 parts per million by volume in the by-pass duct, then you must also not discharge or cause combustion gases to be emitted into the atmosphere that contain hydrocarbons in the by-pass duct in excess of 10 parts per million by volume, over an hourly rolling average (monitored continuously with a continuous emissions monitoring system), dry basis, corrected to 7 percent oxygen, and reported as propane, at any time during the destruction and removal efficiency (DRE) test runs or their equivalent as provided by §63.1206(b)(7).

(B) For new sources, you must not discharge or cause combustion gases to be emitted into the atmosphere that contain either:

(*1*) Hydrocarbons in the main stack in excess of 20 parts per million by volume, over an hourly rolling average (monitored continuously with a continuous emissions monitoring system), dry basis, corrected to 7 percent oxygen, and reported as propane; or

(*2*)(*i*) Hydrocarbons both in the bypass duct and at a preheater tower combustion gas monitoring location in excess of 10 parts per million by volume, at each location, over an hourly rolling average (monitored continuously with a continuous emissions monitoring system), dry basis, corrected to 7 percent oxygen, and reported as propane, and

(*ii*) Hydrocarbons in the main stack, if construction of the kiln commenced after April 19, 1996 at a plant site where a cement kiln (whether burning hazardous waste or not) did not previously exist, to 50 parts per million by volume, over a 30-day block average (monitored continuously with a continuous emissions monitoring system), dry basis, corrected to 7 percent oxygen, and reported as propane; or

(*3*)(*i*) If the only firing location of hazardous waste upstream (in terms of gas flow) of the point where combustion gases are diverted into the bypass duct is at the kiln end where products are normally discharged, then both hydrocarbons at the preheater tower combustion gas monitoring location in excess of 10 parts per million by volume, over an hourly rolling average (monitored continuously with a continuous emissions monitoring system), dry basis, corrected to 7 percent oxygen, and reported as propane, and either hydrocarbons in the by-pass duct in excess of 10 parts per million by volume, over an hourly rolling average (monitored continuously with a continuous emissions monitoring system), dry

basis, corrected to 7 percent oxygen, and reported as propane, or carbon monoxide in excess of 100 parts per million by volume, over an hourly rolling average (monitored continuously with a continuous emissions monitoring system), dry basis, and corrected to 7 percent oxygen. If you comply with the carbon monoxide standard of 100 parts per million by volume in the by-pass duct, then you must also not discharge or cause combustion gases to be emitted into the atmosphere that contain hydrocarbons in the by-pass duct in excess of 10 parts per million by volume, over an hourly rolling average (monitored continuously with a continuous emissions monitoring system), dry basis, corrected to 7 percent oxygen, and reported as propane, at any time during the destruction and removal efficiency (DRE) test runs or their equivalent as provided by § 63.1206(b)(7).

(*ii*) If construction of the kiln commenced after April 19, 1996 at a plant site where a cement kiln (whether burning hazardous waste or not) did not previously exist, hydrocarbons are limited to 50 parts per million by volume, over a 30-day block average (monitored continuously with a continuous emissions monitoring system), dry basis, corrected to 7 percent oxygen, and reported as propane.

(ii) Lightweight aggregate kilns that feed hazardous waste at a location other than the end where products are normally discharged and where fuels are normally fired must comply with the hydrocarbon standards of § 63.1205 as follows:

(A) Existing sources must comply with the 20 parts per million by volume hydrocarbon standard under § 63.1205(a)(5)(ii);

(B) New sources must comply with the 20 parts per million by volume hydrocarbon standard under § 63.1205(b)(5)(ii).

(14) *Alternative to the particulate matter standard for incinerators.* (i) *General.* In lieu of complying with the applicable particulate matter standard of § 63.1203(a)(7) or (b)(7), existing and new incinerators may elect to instead comply with the alternative metal emission control requirements described in paragraph (b)(14)(ii) or (b)(14)(iii) of this section, respectively.

(ii) *Alternative metal emission control requirements for existing incinerators.* (A) You must not discharge or cause combustion gases to be emitted into the atmosphere that contain lead, cadmium, and selenium in excess of 240 μg/dscm, combined emissions, corrected to 7 percent oxygen; and,

(B) You must not discharge or cause combustion gases to be emitted into the atmosphere that contain arsenic, beryllium, chromium, antimony, cobalt, manganese, and nickel in excess of 97 μg/dscm, combined emissions, corrected to 7 percent oxygen; and,

(C) You must comply with the provisions specified in paragraph (b)(14)(iv) of this section.

(iii) *Alternative metal emission control requirements for new incinerators.* (A) You must not discharge or cause combustion gases to be emitted into the atmosphere that contain lead, cadmium, and selenium in excess of 24 μg/dscm, combined emissions, corrected to 7 percent oxygen; and,

(B) You must not discharge or cause combustion gases to be emitted into the atmosphere that contain arsenic, beryllium, chromium, antimony, cobalt, manganese, and nickel in excess of 97 μg/dscm, combined emissions, corrected to 7 percent oxygen; and,

(C) You must comply with the provisions specified in paragraph (b)(14)(iv) of this section.

(iv) *Other requirements.* Existing and new incinerators must document in the operating record that they meet the requirements of paragraph (b)(14)(iv)(A) through (C) of this section.

(A) The twelve-hour rolling average of the maximum theoretical emissions concentration for lead, cadmium, and selenium, combined, for the combined hazardous waste feedstreams to the incinerator, must not exceed:

(*1*) For existing incinerators, 1,325 μg/dscm.

(*2*) For new incinerators, 875 μg/dscm.

(B) The twelve-hour rolling average of the maximum theoretical emissions concentration for arsenic, beryllium, chromium, antimony, cobalt, manganese, and nickel, combined, for the combined hazardous waste feedstreams to the incinerator, must not exceed:

(*1*) For existing incinerators, 6,000 μg/dscm.

(*2*) For new incinerators, 3250 μg/dscm.

(C) You must document that your air pollution control system achieves at least a 90 percent system removal efficiency for semivolatile metals. In making this demonstration, you may spike semivolatile metals above the applicable levels of paragraph (b)(14)(iv)(A) or (B) of this section provided that the applicable alternative emission limitation of paragraph (b)(14)(ii)(A) or (iii)(A) of this section is attained during the test. This test may be performed independently of the comprehensive performance test and must be used to establish applicable operating parameter limits as described in § 63.1209(n), not including § 63.1209(n)(2), to ensure that a 90 percent semivolatile metal system removal efficiency is achieved during normal operations.

(v) *Operating limits.* (A) Semivolatile and low volatile metal operating parameter limits must be established to ensure compliance with the alternative emission limitations described in paragraphs (b)(14)(ii) and (iii) of this section pursuant to § 63.1209(n), except that semivolatile metal feedrate limits would apply to lead, cadmium, and selenium, combined, and low volatile metal feedrate limits would apply to arsenic, beryllium, chromium, antimony, cobalt, manganese, and nickel, combined.

(B) Twelve-hour rolling average hazardous waste metal feedrate limits required pursuant to paragraphs (b)(14)(iv)(A) and (B) of this section are based on the combined hazardous waste feedstreams to the incinerator and may be expressed either as an maximum theoretical emission concentration limit or as a restriction on maximum hazardous waste metals mass feedrate and minimum gas flow rate.

(C) For purposes of complying with the twelve-hour rolling average hazardous waste metal feedrate limits of paragraphs (b)(14)(iv)(A) and (B) of this section, non-detectable metal constituents in each hazardous waste feed must be assumed to be present at one-half the detection limit.

(15) *Alternative to the interim standards for mercury for cement and lightweight aggregate kilns.* (i) *General.* In lieu of complying with the applicable mercury standards of §§ 63.1204(a)(2) and (b)(2) for existing and new cement kilns and §§ 63.1205(a)(2) and (b)(2) for existing and new lightweight aggregate kilns, you may instead elect to comply with the alternative mercury standard described in paragraphs (b)(15)(ii) through (b)(15)(v) of this section.

(ii) *Operating requirement.* You must not exceed a hazardous waste feedrate corresponding to a maximum theoretical emission concentration (MTEC) of 120 μg/dscm on a twelve-hour rolling average.

(iii) To document compliance with the operating requirement of paragraph (b)(15)(ii) of this section, you must:

(A) Monitor and record the feedrate of mercury for each hazardous waste feedstream according to § 63.1209(c);

(B) Monitor with a CMS and record in the operating record the gas flowrate (either directly or by monitoring a surrogate parameter that you have correlated to gas flowrate);

(C) Continuously calculate and record in the operating record a MTEC assuming mercury from all hazardous waste feedstreams is emitted;

(D) Interlock the MTEC calculated in paragraph (b)(15)(iii)(C) of this section to the AWFCO system to stop hazardous waste burning when the MTEC exceeds the operating requirement of paragraph (b)(15)(ii) of this section.

(iv) In lieu of the requirement in paragraph (b)(15)(iii) of this section, you may:

(A) Identify in the Notification of Compliance a minimum gas flowrate limit and a maximum feedrate limit of mercury from all hazardous waste feedstreams that ensures the MTEC calculated in paragraph (b)(15)(iii)(C) of this section is below the operating requirement of paragraph (b)(15)(ii) of this section; and

(B) Interlock the minimum gas flowrate limit and maximum feedrate limits in paragraph (b)(15)(iv)(A) of this section to the AWFCO system to stop hazardous waste burning when the gas flowrate or mercury feedrate exceeds the limits in paragraph (b)(15)(iv)(A) of this section.

(v) *Notification requirement.* You must notify in writing the RCRA authority

that you intend to comply with the alternative standard.

(c) *Operating requirements*—(1) *General.* (i) You must operate only under the operating requirements specified in the Documentation of Compliance under § 63.1211(c) or the Notification of Compliance under §§ 63.1207(j) and 63.1210(b), except:

(A) During performance tests under approved test plans according to § 63.1207(e), (f), and (g), and

(B) Under the conditions of paragraph (b)(1)(i) or (ii) of this section;

(ii) The Documentation of Compliance and the Notification of Compliance must contain operating requirements including, but not limited to, the operating requirements in this section and § 63.1209

(iii) Failure to comply with the operating requirements is failure to ensure compliance with the emission standards of this subpart;

(iv) Operating requirements in the Notification of Compliance are applicable requirements for purposes of parts 70 and 71 of this chapter;

(v) The operating requirements specified in the Notification of Compliance will be incorporated in the title V permit.

(2) *Startup, shutdown, and malfunction plan.* (i) You are subject to the startup, shutdown, and malfunction plan requirements of § 63.6(e)(3).

(ii) If you elect to comply with §§ 270.235(a)(1)(iii), 270.235(a)(2)(iii), or 270.235(b)(1)(ii) of this chapter to address RCRA concerns that you minimize emissions of toxic compounds from startup, shutdown, and malfunction events (including releases from emergency safety vents):

(A) The startup, shutdown, and malfunction plan must include a description of potential causes of malfunctions, including releases from emergency safety vents, that may result in significant releases of hazardous air pollutants, and actions the source is taking to minimize the frequency and severity of those malfunctions.

(B) You must submit the startup, shutdown, and malfunction plan to the Administrator for review and approval.

(*1*) *Approval procedure.* The Administrator will notify you of approval or intention to deny approval of the startup, shutdown, and malfunction plan within 90 calendar days after receipt of the original request and within 60 calendar days after receipt of any supplemental information that you submit. Before disapproving the plan, the Administrator will notify you of the Administrator's intention to disapprove the plan together with:

(i) Notice of the information and findings on which intended disapproval is based; and

(*ii*) Notice of opportunity for you to present additional information to the Administrator before final action on disapproval of the plan. At the time the Administrator notifies you of intention to disapprove the plan, the Administrator will specify how much time you will have after being notified on the intended disapproval to submit additional information.

(*2*) *Responsibility of owners and operators.* You are responsible for ensuring that you submit any supplementary and additional information supporting your plan in a timely manner to enable the Administrator to consider whether to approve the plan. Neither your submittal of the plan, nor the Administrator's failure to approve or disapprove the plan, relieves you of the responsibility to comply with the provisions of this subpart.

(C) *Changes to the plan that may significantly increase emissions.* (*1*) You must request approval in writing from the Administrator within 5 days after making a change to the startup, shutdown, and malfunction plan that may significantly increase emissions of hazardous air pollutants.

(*2*) To request approval of such changes to the startup, shutdown, and malfunction plan, you must follow the procedures provided by paragraph (c)(2)(ii)(B) of this section for initial approval of the plan.

(iii) You must identify in the plan a projected oxygen correction factor based on normal operations to use during periods of startup and shutdown.

(iv) You must record the plan in the operating record.

(v) *Operating under the startup, shutdown, and malfunction plan.* (A) *Compliance with AWFCO requirements during malfunctions.* (*1*) During malfunctions,

the automatic waste feed cutoff requirements of §63.1206(c)(3) continue to apply, except for paragraphs (c)(3)(v) and (c)(3)(vi) of this section. If you exceed a part 63, Subpart EEE, of this chapter emission standard monitored by a CEMS or COMs or operating limit specified under §63.1209, the automatic waste feed cutoff system must immediately and automatically cutoff the hazardous waste feed, except as provided by paragraph (c)(3)(viii) of this section. If the malfunction itself prevents immediate and automatic cutoff of the hazardous waste feed, however, you must cease feeding hazardous waste as quickly as possible.

(*2*) Although the automatic waste feed cutoff requirements continue to apply during a malfunction, an exceedance of an emission standard monitored by a CEMS or COMS or operating limit specified under §63.1209 is not a violation of this subpart if you take the corrective measures prescribed in the startup, shutdown, and malfunction plan.

(*3*) *Excessive exceedances during malfunctions.* For each set of 10 exceedances of an emission standard or operating requirement while hazardous waste remains in the combustion chamber (*i.e.*, when the hazardous waste residence time has not transpired since the hazardous waste feed was cutoff) during a 60-day block period, you must:

(*i*) Within 45 days of the 10th exceedance, complete an investigation of the cause of each exceedance and evaluation of approaches to minimize the frequency, duration, and severity of each exceedance, and revise the startup, shutdown, and malfunction plan as warranted by the evaluation to minimize the frequency, duration, and severity of each exceedance; and

(*ii*) Record the results of the investigation and evaluation in the operating record, and include a summary of the investigation and evaluation, and any changes to the startup, shutdown, and malfunction plan, in the excess emissions report required under §63.10(e)(3).

(B) *Compliance with AWFCO requirements when burning hazardous waste during startup and shutdown.* (*1*) If you feed hazardous waste during startup or shutdown, you must include waste feed restrictions (*e.g.*, type and quantity), and other appropriate operating conditions and limits in the startup, shutdown, and malfunction plan.

(*2*) You must interlock the operating limits you establish under paragraph (c)(2)(v)(B)(*1*) of this section with the automatic waste feed cutoff system required under §63.1206(c)(3), except for paragraphs (c)(3)(v) and (c)(3)(vi) of this section.

(*3*) When feeding hazardous waste during startup or shutdown, the automatic waste feed cutoff system must immediately and automatically cutoff the hazardous waste feed if you exceed the operating limits you establish under paragraph (c)(2)(v)(B)(*1*) of this section, except as provided by paragraph (c)(3)(viii) of this section.

(*4*) Although the automatic waste feed cutoff requirements of this paragraph apply during startup and shutdown, an exceedance of an emission standard or operating limit is not a violation of this subpart if you comply with the operating procedures prescribed in the startup, shutdown, and malfunction plan.

(3) *Automatic waste feed cutoff (AWFCO)*—(i) *General.* Upon the compliance date, you must operate the hazardous waste combustor with a functioning system that immediately and automatically cuts off the hazardous waste feed, except as provided by paragraph (c)(3)(viii) of this section:

(A) When any of the following are exceeded: Operating parameter limits specified under §63.1209; an emission standard monitored by a CEMS; and the allowable combustion chamber pressure;

(B) When the span value of any CMS detector, except a CEMS, is met or exceeded;

(C) Upon malfunction of a CMS monitoring an operating parameter limit specified under §63.1209 or an emission level; or

(D) When any component of the automatic waste feed cutoff system fails.

(ii) *Ducting of combustion gases.* During an AWFCO, you must continue to duct combustion gasses to the air pollution control system while hazardous waste remains in the combustion chamber (*i.e.*, if the hazardous waste

residence time has not transpired since the hazardous waste feed cutoff system was activated).

(iii) *Restarting waste feed.* You must continue to monitor during the cutoff the operating parameters for which limits are established under § 63.1209 and the emissions required under that section to be monitored by a CEMS, and you must not restart the hazardous waste feed until the operating parameters and emission levels are within the specified limits.

(iv) *Failure of the AWFCO system.* If the AWFCO system fails to automatically and immediately cutoff the flow of hazardous waste upon exceedance of parameter required to be interlocked with the AWFCO system under paragraph (c)(3)(i) of this section, you have failed to comply with the AWFCO requirements of paragraph (c)(3) of this section.

(v) *Corrective measures.* If, after any AWFCO, there is an exceedance of an emission standard or operating requirement, irrespective of whether the exceedance occurred while hazardous waste remained in the combustion chamber (*i.e.*, whether the hazardous waste residence time has transpired since the hazardous waste feed cutoff system was activated), you must investigate the cause of the AWFCO, take appropriate corrective measures to minimize future AWFCOs, and record the findings and corrective measures in the operating record.

(vi) *Excessive exceedance reporting.* (A) For each set of 10 exceedances of an emission standard or operating requirement while hazardous waste remains in the combustion chamber (*i.e.*, when the hazardous waste residence time has not transpired since the hazardous waste feed was cutoff) during a 60-day block period, you must submit to the Administrator a written report within 5 calendar days of the 10th exceedance documenting the exceedances and results of the investigation and corrective measures taken.

(B) On a case-by-case basis, the Administrator may require excessive exceedance reporting when fewer than 10 exceedances occur during a 60-day block period.

(vii) *Testing.* The AWFCO system and associated alarms must be tested at least weekly to verify operability, unless you document in the operating record that weekly inspections will unduly restrict or upset operations and that less frequent inspection will be adequate. At a minimum, you must conduct operability testing at least monthly. You must document and record in the operating record AWFCO operability test procedures and results.

(viii) *Ramping down waste feed.* (A) You may ramp down the waste feedrate of pumpable hazardous waste over a period not to exceed one minute, except as provided by paragraph (c)(3)(viii)(B) of this section. If you elect to ramp down the waste feed, you must document ramp down procedures in the operating and maintenance plan. The procedures must specify that the ramp down begins immediately upon initiation of automatic waste feed cutoff and the procedures must prescribe a bona fide ramping down. If an emission standard or operating limit is exceeded during the ramp down, you have failed to comply with the emission standards or operating requirements of this subpart.

(B) If the automatic waste feed cutoff is triggered by an exceedance of any of the following operating limits, you may not ramp down the waste feed cutoff: Minimum combustion chamber temperature, maximum hazardous waste feedrate, or any hazardous waste firing system operating limits that may be established for your combustor.

(4) *ESV openings*—(i) *Failure to meet standards.* If an emergency safety vent (ESV) opens when hazardous waste remains in the combustion chamber (*i.e.*, when the hazardous waste residence time has not expired) during an event other than a malfunction as defined in the startup, shutdown, and malfunction plan such that combustion gases are not treated as during the most recent comprehensive performance test (*e.g.*, if the combustion gas by-passes any emission control device that was operating during the performance test), you must document in the operating record whether you remain in compliance with the emission standards of this subpart considering emissions during the ESV opening event.

(ii) *ESV operating plan.* (A) You must develop an ESV operating plan, comply

with the operating plan, and keep the plan in the operating record.

(B) The ESV operating plan must provide detailed procedures for rapidly stopping the waste feed, shutting down the combustor, and maintaining temperature and negative pressure in the combustion chamber during the hazardous waste residence time, if feasible. The plan must include calculations and information and data documenting the effectiveness of the plan's procedures for ensuring that combustion chamber temperature and negative pressure are maintained as is reasonably feasible.

(iii) *Corrective measures.* After any ESV opening that results in a failure to meet the emission standards as defined in paragraph (c)(4)(i) of this section, you must investigate the cause of the ESV opening, take appropriate corrective measures to minimize such future ESV openings, and record the findings and corrective measures in the operating record.

(iv) *Reporting requirements.* You must submit to the Administrator a written report within 5 days of an ESV opening that results in failure to meet the emission standards of this subpart (as determined in paragraph (c)(4)(i) of this section) documenting the result of the investigation and corrective measures taken.

(5) *Combustion system leaks.* (i) Combustion system leaks of hazardous air pollutants must be controlled by:

(A) Keeping the combustion zone sealed to prevent combustion system leaks; or

(B) Maintaining the maximum combustion zone pressure lower than ambient pressure using an instantaneous monitor; or

(C) Upon prior written approval of the Administrator, an alternative means of control to provide control of combustion system leaks equivalent to maintenance of combustion zone pressure lower than ambient pressure; or

(D) Upon prior written approval of the Administrator, other technique(s) which can be demonstrated to prevent fugitive emissions without use of instantaneous pressure limits; and

(ii) You must specify in the operating record the method used for control of combustion system leaks.

(6) *Operator training and certification.* (i) You must establish training programs for all categories of personnel whose activities may reasonably be expected to directly affect emissions of hazardous air pollutants from the source. Such persons include, but are not limited to, chief facility operators, control room operators, continuous monitoring system operators, persons that sample and analyze feedstreams, persons that manage and charge feedstreams to the combustor, persons that operate emission control devices, and ash and waste handlers. Each training program shall be of a technical level commensurate with the person's job duties specified in the training manual. Each commensurate training program shall require an examination to be administered by the instructor at the end of the training course. Passing of this test shall be deemed the ''certification'' for personnel, except that, for control room operators, the training and certification program shall be as specified in paragraphs (c)(6)(iii) through (c)(6)(vi) of this section.

(ii) You must ensure that the source is operated and maintained at all times by persons who are trained and certified to perform these and any other duties that may affect emissions of hazardous air pollutants. A certified control room operator must be on duty at the site at all times the source is in operation.

(iii) Hazardous waste incinerator control room operators must:

(A) Be trained and certified under a site-specific, source-developed and implemented program that meets the requirements of paragraph (c)(6)(v) of this section; or

(B) Be trained under the requirements of, and certified under, the American Society of Mechanical Engineers Standard Number QHO–1–1994 and QHO–1a–1996 Addenda (incorporated by reference—see § 63.14(e)). If you choose to use the ASME program:

(*1*) Control room operators must, prior to the compliance date, achieve provisional certification, and must submit an application to ASME and be scheduled for the full certification

exam. Within one year of the compliance date, control room operators must achieve full certification;

(*2*) New operators and operators of new sources must, before assuming their duties, achieve provisional certification, and must submit an application to ASME, and be scheduled for the full certification exam. Within one year of assuming their duties, these operators must achieve full certification; or

(C) Be trained and certified under a State program.

(iv) Cement kiln and lightweight aggregate kiln control room operators must be trained and certified under:

(A) A site-specific, source-developed and implemented program that meets the requirements of paragraph (c)(6)(v) of this section; or

(B) A State program.

(v) Site-specific, source developed and implemented training programs for control room operators must include the following elements:

(A) Training on the following subjects:

(*1*) Environmental concerns, including types of emissions;

(*2*) Basic combustion principles, including products of combustion;

(*3*) Operation of the specific type of combustor used by the operator, including proper startup, waste firing, and shutdown procedures;

(*4*) Combustion controls and continuous monitoring systems;

(*5*) Operation of air pollution control equipment and factors affecting performance;

(*6*) Inspection and maintenance of the combustor, continuous monitoring systems, and air pollution control devices;

(*7*) Actions to correct malfunctions or conditions that may lead to malfunction;

(*8*) Residue characteristics and handling procedures; and

(*9*) Applicable Federal, state, and local regulations, including Occupational Safety and Health Administration workplace standards; and

(B) An examination designed and administered by the instructor; and

(C) Written material covering the training course topics that may serve as reference material following completion of the course.

(vi) To maintain control room operator qualification under a site-specific, source developed and implemented training program as provided by paragraph (c)(6)(v) of this section, control room operators must complete an annual review or refresher course covering, at a minimum, the following topics:

(A) Update of regulations;

(B) Combustor operation, including startup and shutdown procedures, waste firing, and residue handling;

(C) Inspection and maintenance;

(D) Responses to malfunctions or conditions that may lead to malfunction; and

(E) Operating problems encountered by the operator.

(vii) You must record the operator training and certification program in the operating record.

(7) *Operation and maintenance plan*—

(i) *General*. (A) You must prepare and at all times operate according to an operation and maintenance plan that describes in detail procedures for operation, inspection, maintenance, and corrective measures for all components of the combustor, including associated pollution control equipment, that could affect emissions of regulated hazardous air pollutants.

(B) The plan must prescribe how you will operate and maintain the combustor in a manner consistent with good air pollution control practices for minimizing emissions at least to the levels achieved during the comprehensive performance test.

(C) This plan ensures compliance with the operation and maintenance requirements of § 63.6(e) and minimizes emissions of pollutants, automatic waste feed cutoffs, and malfunctions.

(D) You must record the plan in the operating record.

(ii) *Bag leak detection system requirements for baghouses at lightweight aggregate kilns and incinerators*. If you own or operate a hazardous waste incinerator or hazardous waste burning lightweight aggregate kiln equipped with a baghouse (fabric filter), you must continuously operate a bag leak detection system that meets the specifications and requirements of paragraph (c)(7)(ii)(A) of this section and you

must comply with the corrective measures requirements of paragraph (c)(7)(ii)(B) of this section:

(A) *Bag leak detection system specification and requirements. (1)* The bag leak detection system must be certified by the manufacturer to be capable of continuously detecting and recording particulate matter emissions at concentrations of 1.0 milligrams per actual cubic meter unless you demonstrate, pursuant to procedures in §63.1209(a)(1), that a higher sensitivity would adequately detect bag leaks;

(*2*) The bag leak detection system shall provide output of relative particulate matter loadings;

(*3*) The bag leak detection system shall be equipped with an alarm system that will sound an audible alarm when an increase in relative particulate loadings is detected over a preset level;

(*4*) The bag leak detection system shall be installed and operated in a manner consistent with available written guidance from the U.S. Environmental Protection Agency or, in the absence of such written guidance, the manufacturer's written specifications and recommendations for installation, operation, and adjustment of the system;

(*5*) The initial adjustment of the system shall, at a minimum, consist of establishing the baseline output by adjusting the sensitivity (range) and the averaging period of the device, and establishing the alarm set points and the alarm delay time;

(*6*) Following initial adjustment, you must not adjust the sensitivity or range, averaging period, alarm set points, or alarm delay time, except as detailed in the operation and maintenance plan required under paragraph (c)(7)(i) of this section. You must not increase the sensitivity by more than 100 percent or decrease the sensitivity by more than 50 percent over a 365 day period unless such adjustment follows a complete baghouse inspection which demonstrates the baghouse is in good operating condition;

(*7*) For negative pressure or induced air baghouses, and positive pressure baghouses that are discharged to the atmosphere through a stack, the bag leak detector shall be installed downstream of the baghouse and upstream of any wet acid gas scrubber; and

(*8*) Where multiple detectors are required, the system's instrumentation and alarm system may be shared among the detectors.

(B) *Bag leak detection system corrective measures requirements.* The operating and maintenance plan required by paragraph (c)(7)(i) of this section must include a corrective measures plan that specifies the procedures you will follow in the case of a bag leak detection system alarm. The corrective measures plan must include, at a minimum, the procedures used to determine and record the time and cause of the alarm as well as the corrective measures taken to correct the control device malfunction or minimize emissions as specified below. Failure to initiate the corrective measures required by this paragraph is failure to ensure compliance with the emission standards in this subpart.

(*1*) You must initiate the procedures used to determine the cause of the alarm within 30 minutes of the time the alarm first sounds; and

(*2*) You must alleviate the cause of the alarm by taking the necessary corrective measure(s) which may include, but are not to be limited to, the following measures:

(*i*) Inspecting the baghouse for air leaks, torn or broken filter elements, or any other malfunction that may cause an increase in emissions;

(*ii*) Sealing off defective bags or filter media;

(*iii*) Replacing defective bags or filter media, or otherwise repairing the control device;

(*iv*) Sealing off a defective baghouse compartment;

(*v*) Cleaning the bag leak detection system probe, or otherwise repairing the bag leak detection system; or

(*vi*) Shutting down the combustor.

[64 FR 53038, Sept. 30, 1999, as amended at 65 FR 42298, July 10, 2000; 65 FR 67271, Nov. 9, 2000; 66 FR 24272, May 14, 2001; 66 FR 35103, July 3, 2001; 66 FR 63317, Dec. 7, 2001; 67 FR 6813, Feb. 13, 2002; 67 FR 6989, Feb. 14, 2002]

§63.1207 What are the performance testing requirements?

(a) *General.* The provisions of §63.7 apply, except as noted below.

(b) *Types of performance tests*—(1) *Comprehensive performance test*. You must conduct comprehensive performance tests to demonstrate compliance with the emission standards provided by §§ 63.1203, 63.1204, and 63.1205, establish limits for the operating parameters provided by § 63.1209, and demonstrate compliance with the performance specifications for continuous monitoring systems.

(2) *Confirmatory performance test*. You must conduct confirmatory performance tests to:

(i) Demonstrate compliance with the dioxin/furan emission standard when the source operates under normal operating conditions; and

(ii) Conduct a performance evaluation of continuous monitoring systems required for compliance assurance with the dioxin/furan emission standard under § 63.1209(k).

(c) *Initial comprehensive performance test*—(1) *Test date*. Except as provided by paragraph (c)(2) of this section, you must commence the initial comprehensive performance test not later than six months after the compliance date.

(2) *Data in lieu of the initial comprehensive performance test*. (i) You may request that previous emissions test data serve as documentation of conformance with the emission standards of this subpart provided that the previous testing:

(A) Was initiated after 54 months prior to the compliance date, except as provided by paragraphs (c)(2)(iii) or (c)(2)(iv) of this section;

(B) Results in data that meet quality assurance objectives (determined on a site-specific basis) such that the results demonstrate compliance with the applicable standards;

(C) Was in conformance with the requirements of paragraph (g)(1) of this section; and

(D) Was sufficient to establish the applicable operating parameter limits under § 63.1209.

(ii) You must submit data in lieu of the initial comprehensive performance test in lieu of (i.e., if the data are in lieu of all performance testing) or with the notification of performance test required under paragraph (e) of this section.

(iii) The data in lieu of test age restriction provided in paragraph (c)(2)(i)(A) of this section does not apply for the duration of the interim standards (*i.e.*, the standards published in the FEDERAL REGISTER on February 13, 2002. Paragraph (c)(2)(i)(A) of this section does not apply until EPA promulgates permanent replacement standards pursuant to the Settlement Agreement noticed in the FEDERAL REGISTER on November 16, 2001.

(iv) The data in lieu test age restriction provided in paragraph (c)(2)(i)(A) of this section does not apply to DRE data provided you do not feed hazardous waste at a location in the combustion system other than the normal flame zone.

(d) *Frequency of testing*. Except as otherwise specified in paragraph (d)(4) of this section, you must conduct testing periodically as prescribed in paragraphs (d)(1) through (d)(3) of this section. The date of commencement of the initial comprehensive performance test is the basis for establishing the deadline to commence the initial confirmatory performance test and the next comprehensive performance test. You may conduct performance testing at any time prior to the required date. The deadline for commencing subsequent confirmatory and comprehensive performance testing is based on the date of commencement of the previous comprehensive performance test. Unless the Administrator grants a time extension under paragraph (i) of this section, you must conduct testing as follows:

(1) *Comprehensive performance testing*. Except as otherwise specified in paragraph (d)(4) of this section, you must commence testing no later than 61 months after the date of commencing the previous comprehensive performance test. If you submit data in lieu of the initial performance test, you must commence the subsequent comprehensive performance test within 61 months of commencing the test used to provide the data in lieu of the initial performance test.

(2) *Confirmatory performance testing*. Except as otherwise specified in paragraph (d)(4) of this section, you must commence confirmatory performance testing no later than 31 months after

the date of commencing the previous comprehensive performance test. If you submit data in lieu of the initial performance test, you must commence the initial confirmatory performance test within 31 months of the date six months after the compliance date. To ensure that the confirmatory test is conducted approximately midway between comprehensive performance tests, the Administrator will not approve a test plan that schedules testing within 18 months of commencing the previous comprehensive performance test.

(3) *Duration of testing*. You must complete performance testing within 60 days after the date of commencement, unless the Administrator determines that a time extension is warranted based on your documentation in writing of factors beyond your control that prevent you from meeting the 60-day deadline.

(4) *Applicable testing requirements under the interim standards*. (i) Waiver of periodic comprehensive performance tests. Except as provided by paragraph (c)(2) of this section, you must conduct only an initial comprehensive performance test under the interim standards (*i.e.*, the standards published in the FEDERAL REGISTER on February 13, 2002; all subsequent comprehensive performance testing requirements are waived under the interim standards. The provisions in the introductory text to paragraph (d) and in paragraph (d)(1) of this section do not apply until EPA promulgates permanent replacement standards pursuant to the Settlement Agreement noticed in the FEDERAL REGISTER on November 16, 2001.

(ii) *Waiver of confirmatory performance tests*. You are not required to conduct a confirmatory test under the interim standards (*i.e.*, the standards published in the FEDERAL REGISTER on February 13, 2002. The confirmatory testing requirements in the introductory text to paragraph (d) and in paragraph (d)(2) of this section are waived until EPA promulgates permanent replacement standards pursuant to the Settlement Agreement noticed in the FEDERAL REGISTER on November 16, 2001.

(e) *Notification of performance test and CMS performance evaluation, and approval of test plan and CMS performance evaluation plan*. (1) The provisions of §63.7(b) and (c) and §63.8(e) apply, except:

(i) *Comprehensive performance test*. You must submit to the Administrator a notification of your intention to conduct a comprehensive performance test and CMS performance evaluation and a site-specific test plan and CMS performance evaluation test plan at least one year before the performance test and performance evaluation are scheduled to begin.

(A) The Administrator will notify you of approval or intent to deny approval of the site-specific test plan and CMS performance evaluation test plan within 9 months after receipt of the original plan.

(B) You must submit to the Administrator a notification of your intention to conduct the comprehensive performance test at least 60 calendar days before the test is scheduled to begin.

(ii) *Confirmatory performance test*. You must submit to the Administrator a notification of your intention to conduct a confirmatory performance test and CMS performance evaluation and a site-specific test plan and CMS performance evaluation test plan at least 60 calendar days before the performance test is scheduled to begin. The Administrator will notify you of approval or intent to deny approval of the site-specific test plan and CMS performance evaluation test plan within 30 calendar days after receipt of the original test plans.

(2) After the Administrator has approved the site-specific test plan and CMS performance evaluation test plan, you must make the test plans available to the public for review. You must issue a public notice announcing the approval of the test plans and the location where the test plans are available for review.

(3) *Petitions for time extension if Administrator fails to approve or deny test plans*. You may petition the Administrator under §63.7(h) to obtain a ''waiver'' of any performance test—initial or periodic performance test; comprehensive or confirmatory test. The ''waiver'' would be implemented as an extension of time to conduct the performance test at a later date.

(i) *Qualifications for the waiver.* (A) You may not petition the Administrator for a waiver under this section if the Administrator has issued a notification of intent to deny your test plan(s) under § 63.7(c)(3)(i)(B);

(B) You must submit a site-specific emissions testing plan and a continuous monitoring system performance evaluation test plan at least one year before a comprehensive performance test is scheduled to begin as required by paragraph (c)(1) of this section, or at least 60 days before a confirmatory performance test is scheduled to begin as required by paragraph (d) of this section. The test plans must include all required documentation, including the substantive content requirements of paragraph (f) of this section and § 63.8(e); and

(C) You must make a good faith effort to accommodate the Administrator's comments on the test plans.

(ii) *Procedures for obtaining a waiver and duration of the waiver:* (A) You must submit to the Administrator a waiver petition or request to renew the petition under § 63.7(h) separately for each source at least 60 days prior to the scheduled date of the performance test;

(B) The Administrator will approve or deny the petition within 30 days of receipt and notify you promptly of the decision;

(C) The Administrator will not approve an individual waiver petition for a duration exceeding 6 months;

(D) The Administrator will include a sunset provision in the waiver ending the waiver within 6 months;

(E) You may submit a revised petition to renew the waiver under § 63.7(h)(3)(iii) at least 60 days prior to the end date of the most recently approved waiver petition;

(F) The Administrator may approve a revised petition for a total waiver period up to 12 months.

(iii) *Content of the waiver.* (A) You must provide documentation to enable the Administrator to determine that the source is meeting the relevant standard(s) on a continuous basis as required by § 63.7(h)(2). For extension requests for the initial comprehensive performance test, you must submit your Documentation of Compliance to assist the Administrator in making this determination.

(B) You must include in the petition information justifying your request for a waiver, such as the technical or economic infeasibility, or the impracticality, of the affected source performing the required test, as required by § 63.7(h)(3)(iii).

(iv) P*ublic notice.* You must notify the public (e.g., distribute public mailing list) of your petition to waive a performance test.

(f) *Content of performance test plan.* The provisions of §§ 63.7(c)(2)(i)–(iii) and (v) regarding the content of the test plan apply. In addition, you must include the following information in the test plan:

(1) *Content of comprehensive performance test plan.* (i) An analysis of each feedstream, including hazardous waste, other fuels, and industrial furnace feedstocks, as fired, that includes:

(A) Heating value, levels of ash (for hazardous waste incinerators only), levels of semivolatile metals, low volatile metals, mercury, and total chlorine (organic and inorganic); and

(B) Viscosity or description of the physical form of the feedstream;

(ii) For organic hazardous air pollutants established by 42 U.S.C. 7412(b)(1), excluding caprolactam (CAS number 105602) as provided by § 63.60:

(A) Except as provided by paragraph (f)(1)(ii)(D) of this section, an identification of such organic hazardous air pollutants that are present in each hazardous waste feedstream. You need not analyze for organic hazardous air pollutants that would reasonably not be expected to be found in the feedstream. You must identify any constituents you exclude from analysis and explain the basis for excluding them. You must conduct the feedstream analysis according to § 63.1208(b)(8);

(B) An approximate quantification of such identified organic hazardous air pollutants in the hazardous waste feedstreams, within the precision produced by analytical procedures of § 63.1208(b)(8); and

(C) A description of blending procedures, if applicable, prior to firing the hazardous waste feedstream, including a detailed analysis of the materials prior to blending, and blending ratios.

(D) The Administrator may approve on a case-by-case basis a hazardous waste feedstream analysis for organic hazardous air pollutants in lieu of the analysis required under paragraph (f)(1)(ii)(A) of this section if the reduced analysis is sufficient to ensure that the POHCs used to demonstrate compliance with the applicable DRE standard of § 63.1203, § 63.1204, or § 63.1205, continue to be representative of the organic hazardous air pollutants in your hazardous waste feedstreams;

(iii) A detailed engineering description of the hazardous waste combustor, including:

(A) Manufacturer's name and model number of the hazardous waste combustor;

(B) Type of hazardous waste combustor;

(C) Maximum design capacity in appropriate units;

(D) Description of the feed system for each feedstream;

(E) Capacity of each feed system;

(F) Description of automatic hazardous waste feed cutoff system(s);

(G) Description of the design, operation, and maintenance practices for any air pollution control system; and

(H) Description of the design, operation, and maintenance practices of any stack gas monitoring and pollution control monitoring systems;

(iv) A detailed description of sampling and monitoring procedures including sampling and monitoring locations in the system, the equipment to be used, sampling and monitoring frequency, and planned analytical procedures for sample analysis;

(v) A detailed test schedule for each hazardous waste for which the performance test is planned, including date(s), duration, quantity of hazardous waste to be burned, and other relevant factors;

(vi) A detailed test protocol, including, for each hazardous waste identified, the ranges of hazardous waste feedrate for each feed system, and, as appropriate, the feedrates of other fuels and feedstocks, and any other relevant parameters that may affect the ability of the hazardous waste combustor to meet the emission standards;

(vii) A description of, and planned operating conditions for, any emission control equipment that will be used;

(viii) Procedures for rapidly stopping the hazardous waste feed and controlling emissions in the event of an equipment malfunction;

(ix) A determination of the hazardous waste residence time as required by § 63.1206(b)(11);

(x) If you are requesting to extrapolate metal feedrate limits from comprehensive performance test levels under §§ 63.1209(l)(1)(i) or 63.1209(n)(2)(ii)(A):

(A) A description of the extrapolation methodology and rationale for how the approach ensures compliance with the emission standards;

(B) Documentation of the historical range of normal (*i.e.*, other than during compliance testing) metals feedrates for each feedstream;

(C) Documentation that the level of spiking recommended during the performance test will mask sampling and analysis imprecision and inaccuracy to the extent that the extrapolated feedrate limits adequately assure compliance with the emission standards;

(xi) If you do not continuously monitor regulated constituents in natural gas, process air feedstreams, and feedstreams from vapor recovery systems under § 63.1209(c)(5), you must include documentation of the expected levels of regulated constituents in those feedstreams;

(xii) Documentation justifying the duration of system conditioning required to ensure the combustor has achieved steady-state operations under performance test operating conditions, as provided by paragraph (g)(1)(iii) of this section;

(xiii) For cement kilns with in-line raw mills, if you elect to use the emissions averaging provision of § 63.1204(d), you must notify the Administrator of your intent in the initial (and subsequent) comprehensive performance test plan, and provide the information required under § 63.1204(d)(ii)(B).

(xiv) For preheater or preheater/precalciner cement kilns with dual stacks, if you elect to use the emissions averaging provision of § 63.1204(e), you must notify the Administrator of

your intent in the initial (and subsequent) comprehensive performance test plan, and provide the information required under § 63.1204(e)(2)(iii)(A).

(xv) [Reserved]

(xvi) If you are not required to conduct performance testing to document compliance with the mercury, semivolatile metal, low volatile metal, or hydrochloric acid/chlorine gas emission standards under paragraph (m) of this section, you must include with the comprehensive performance test plan documentation of compliance with the provisions of that section.

(xvii) If you propose to use a surrogate for measuring or monitoring gas flowrate, you must document in the comprehensive performance test plan that the surrogate adequately correlates with gas flowrate, as required by paragraph (m)(7) of this section, and § 63.1209(j)(2), (k)(3), (m)(2)(i), (n)(5)(i), and (o)(2)(i).

(xviii) You must submit an application to request alternative monitoring under § 63.1209(g)(1) not later than with the comprehensive performance test plan, as required by § 63.1209(g)(1)(iii)(A).

(xix) You must document the temperature location measurement in the comprehensive performance test plan, as required by §§ 63.1209(j)(1)(i) and 63.1209(k)(2)(i).

(xx) If your source is equipped with activated carbon injection, you must document in the comprehensive performance test plan:

(A) The manufacturer specifications for minimum carrier fluid flowrate or pressure drop, as required by § 63.1209(k)(6)(ii); and

(B) Key parameters that affect carbon adsorption, and the operating limits you establish for those parameters based on the carbon used during the performance test, if you elect not to specify and use the brand and type of carbon used during the comprehensive performance test, as required by § 63.1209(k)(6)(iii).

(xxi) If your source is equipped with a carbon bed system, you must include in the comprehensive performance test plan:

(A) A recommended schedule for conducting a subsequent performance test to document compliance with the dioxin/furan and mercury emission standards if you use manufacturer specifications rather than actual bed age at the time of the test to establish the initial limit on bed age, as required by § 63.1209(k)(7)(i)(C); and

(B) Key parameters that affect carbon adsorption, and the operating limits you establish for those parameters based on the carbon used during the performance test, if you elect not to specify and use the brand and type of carbon used during the comprehensive performance test, as required by § 63.1209(k)(7)(ii).

(xxii) If you feed a dioxin/furan inhibitor into the combustion system, you must document in the comprehensive performance test plan key parameters that affect the effectiveness of the inhibitor, and the operating limits you establish for those parameters based on the inhibitor fed during the performance test, if you elect not to specify and use the brand and type of inhibitor used during the comprehensive performance test, as required by § 63.1209(k)(9)(ii).

(xxiii) If your source is equipped with a wet scrubber and you elect to monitor solids content of the scrubber liquid manually but believe that hourly monitoring of solids content is not warranted, you must support an alternative monitoring frequency in the comprehensive performance test plan, as required by § 63.1209(m)(1)(i)(B)(*1*)(*i*).

(xxiv) If your source is equipped with a particulate matter control device other than a wet scrubber, baghouse, or electrostatic precipitator, you must include in the comprehensive performance test plan:

(A) Documentation to support the operating parameter limits you establish for the control device, as required by § 63.1209(m)(1)(iv)(A)(*4*); and

(B) Support for the use of manufacturer specifications if you recommend such specifications in lieu of basing operating limits on performance test operating levels, as required by § 63.1209(m)(1)(iv)(D).

(xxv) If your source is equipped with a dry scrubber to control hydrochloric

acid and chlorine gas, you must document in the comprehensive performance test plan key parameters that affect adsorption, and the limits you establish for those parameters based on the sorbent used during the performance test, if you elect not to specify and use the brand and type of sorbent used during the comprehensive performance test, as required by §63.1209(o)(4)(iii)(A); and

(xxvi) For purposes of calculating semivolatile metal, low volatile metal, mercury, and total chlorine (organic and inorganic), and ash feedrate limits, a description of how you will handle performance test feedstream analytical results that determines these constituents are not present at detectable levels.

(xxvii) Such other information as the Administrator reasonably finds necessary to determine whether to approve the performance test plan.

(2) *Content of confirmatory test plan.* (i) A description of your normal hydrocarbon or carbon monoxide operating levels, as specified in paragraph (g)(2)(i) of this section, and an explanation of how these normal levels were determined;

(ii) A description of your normal applicable operating parameter levels, as specified in paragraph (g)(2)(ii) of this section, and an explanation of how these normal levels were determined;

(iii) A description of your normal chlorine operating levels, as specified in paragraph (g)(2)(iii) of this section, and an explanation of how these normal levels were determined;

(iv) If you use carbon injection or a carbon bed, a description of your normal cleaning cycle of the particulate matter control device, as specified in paragraph (g)(2)(iv) of this section, and an explanation of how these normal levels were determined;

(v) A detailed description of sampling and monitoring procedures including sampling and monitoring locations in the system, the equipment to be used, sampling and monitoring frequency, and planned analytical procedures for sample analysis;

(vi) A detailed test schedule for each hazardous waste for which the performance test is planned, including date(s), duration, quantity of hazardous waste to be burned, and other relevant factors;

(vii) A detailed test protocol, including, for each hazardous waste identified, the ranges of hazardous waste feedrate for each feed system, and, as appropriate, the feedrates of other fuels and feedstocks, and any other relevant parameters that may affect the ability of the hazardous waste combustor to meet the dioxin/furan emission standard;

(viii) A description of, and planned operating conditions for, any emission control equipment that will be used;

(ix) Procedures for rapidly stopping the hazardous waste feed and controlling emissions in the event of an equipment malfunction; and

(x) Such other information as the Administrator reasonably finds necessary to determine whether to approve the confirmatory test plan.

(g) *Operating conditions during testing.* You must comply with the provisions of §63.7(e). Conducting performance testing under operating conditions representative of the extreme range of normal conditions is consistent with the requirement of §63.7(e)(1) to conduct performance testing under representative operating conditions.

(1) *Comprehensive performance testing*—(i) *Operations during testing.* For the following parameters, you must operate the combustor during the performance test under normal conditions (or conditions that will result in higher than normal emissions):

(A) *Chlorine feedrate.* You must feed normal (or higher) levels of chlorine during the dioxin/furan performance test;

(B) *Ash feedrate.* For hazardous waste incinerators, you must conduct the following tests when feeding normal (or higher) levels of ash: The semivolatile metal and low volatile metal performance tests; and the dioxin/furan and mercury performance tests if activated carbon injection or a carbon bed is used; and

(C) *Cleaning cycle of the particulate matter control device.* You must conduct the following tests when the particulate matter control device undergoes its normal (or more frequent) cleaning cycle: The particulate matter, semivolatile metal, and low volatile

metal performance tests; and the dioxin/furan and mercury performance tests if activated carbon injection or a carbon bed is used.

(ii) *Modes of operation.* Given that you must establish limits for the applicable operating parameters specified in § 63.1209 based on operations during the comprehensive performance test, you may conduct testing under two or more operating modes to provide operating flexibility.

(iii) *Steady-state conditions.* (A) Prior to obtaining performance test data, you must operate under performance test conditions until you reach steady-state operations with respect to emissions of pollutants you must measure during the performance test and operating parameters under § 63.1209 for which you must establish limits. During system conditioning, you must ensure that each operating parameter for which you must establish a limit is held at the level planned for the performance test. You must include documentation in the performance test plan under paragraph (f) of this section justifying the duration of system conditioning.

(B) If you own or operate a hazardous waste cement kiln that recycles collected particulate matter (*i.e.*, cement kiln dust) into the kiln, you must sample and analyze the recycled particulate matter prior to obtaining performance test data for levels of selected metals that must be measured during performance testing to document that the system has reached steady-state conditions (*i.e.*, that metals levels have stabilized). You must document the rationale for selecting metals that are indicative of system equilibrium and include the information in the performance test plan under paragraph (f) of this section. To determine system equilibrium, you must sample and analyze the recycled particulate matter hourly for each selected metal, unless you submit in the performance test plan a justification for reduced sampling and analysis and the Administrator approves in writing a reduced sampling and analysis frequency.

(2) *Confirmatory performance testing.* You must conduct confirmatory performance testing for dioxin/furan under normal operating conditions for the following parameters:

(i) Carbon monoxide (or hydrocarbon) CEMS emissions levels must be within the range of the average value to the maximum value allowed, except as provided by paragraph (g)(2)(iv) of this section. The average value is defined as the sum of the hourly rolling average values recorded (each minute) over the previous 12 months, divided by the number of rolling averages recorded during that time. The average value must not include calibration data, startup data, shutdown data, malfunction data, and data obtained when not burning hazardous waste;

(ii) Each operating limit (specified in § 63.1209) established to maintain compliance with the dioxin/furan emission standard must be held within the range of the average value over the previous 12 months and the maximum or minimum, as appropriate, that is allowed, except as provided by paragraph (g)(2)(iv) of this section. The average value is defined as the sum of the rolling average values recorded over the previous 12 months, divided by the number of rolling averages recorded during that time. The average value must not include calibration data, startup data, shutdown data, malfunction data, and data obtained when not burning hazardous waste;

(iii) You must feed chlorine at normal feedrates or greater; and

(iv) If the combustor is equipped with carbon injection or carbon bed, normal cleaning cycle of the particulate matter control device.

(v) The Administrator may approve an alternative range to that required by paragraphs (g)(2)(i) and (ii) of this section if you document in the confirmatory performance test plan that it may be problematic to maintain the required range during the test. In addition, when making the finding of compliance, the Administrator may consider test conditions outside of the range specified in the test plan based on a finding that you could not reasonably maintain the range specified in the test plan and considering factors including whether the time duration and level of the parameter when operations were out of the specified range were such that operations during the

confirmatory test are determined to be reasonably representative of normal operations. In addition, the Administrator will consider the proximity of the emission test results to the standard.

(h) *Operating conditions during subsequent testing.* (1) Current operating parameter limits established under § 63.1209 are waived during subsequent comprehensive performance testing.

(2) Current operating parameter limits are also waived during pretesting prior to comprehensive performance testing for an aggregate time not to exceed 720 hours of operation (renewable at the discretion of the Administrator) under an approved test plan or if the source records the results of the pretesting. Pretesting means:

(i) Operations when stack emissions testing for dioxin/furan, mercury, semivolatile metals, low volatile metals, particulate matter, or hydrochloric acid/chlorine gas is being performed; and

(ii) Operations to reach steady-state operating conditions prior to stack emissions testing under paragraph (g)(1)(iii) of this section.

(i) *Time extension for subsequent performance tests.* After the initial comprehensive performance test, you may request up to a one-year time extension for conducting a comprehensive or confirmatory performance test to consolidate performance testing with other state or federally required emission testing, or for other reasons deemed acceptable by the Administrator. If the Administrator grants a time extension for a comprehensive performance test, the deadlines for commencing the next comprehensive and confirmatory tests are based on the date that the subject comprehensive performance test commences.

(1) You must submit in writing to the Administrator any request under this paragraph for a time extension for conducting a performance test.

(2) You must include in the request for an extension for conducting a performance test the following:

(i) A description of the reasons for requesting the time extension;

(ii) The date by which you will commence performance testing.

(3) The Administrator will notify you in writing of approval or intention to deny approval of your request for an extension for conducting a performance test within 30 calendar days after receipt of sufficient information to evaluate your request. The 30-day approval or denial period will begin after you have been notified in writing that your application is complete. The Administrator will notify you in writing whether the application contains sufficient information to make a determination within 30 calendar days after receipt of the original application and within 30 calendar days after receipt of any supplementary information that you submit.

(4) When notifying you that your application is not complete, the Administrator will specify the information needed to complete the application. The Administrator will also provide notice of opportunity for you to present, in writing, within 30 calendar days after notification of the incomplete application, additional information or arguments to the Administrator to enable further action on the application.

(5) Before denying any request for an extension for performance testing, the Administrator will notify you in writing of the Administrator's intention to issue the denial, together with:

(i) Notice of the information and findings on which the intended denial is based; and

(ii) Notice of opportunity for you to present in writing, within 15 calendar days after notification of the intended denial, additional information or arguments to the Administrator before further action on the request.

(6) The Administrator's final determination to deny any request for an extension will be in writing and will set forth specific grounds upon which the denial is based. The final determination will be made within 30 calendar days after the presentation of additional information or argument (if the application is complete), or within 30 calendar days after the final date specified for the presentation if no presentation is made.

(j) *Notification of compliance*—(1) *Comprehensive performance test.* (i) Within 90 days of completion of a comprehensive

performance test, you must postmark a Notification of Compliance documenting compliance or noncompliance with the emission standards and continuous monitoring system requirements, and identifying operating parameter limits under § 63.1209.

(ii) Upon postmark of the Notification of Compliance, you must comply with all operating requirements specified in the Notification of Compliance in lieu of the limits specified in the Documentation of Compliance required under § 63.1211(c).

(2) *Confirmatory performance test.* Except as provided by paragraph (j)(4) of this section, within 90 days of completion of a confirmatory performance test, you must postmark a Notification of Compliance documenting compliance or noncompliance with the applicable dioxin/furan emission standard.

(3) See §§ 63.7(g), 63.9(h), and 63.1210(b) for additional requirements pertaining to the Notification of Compliance (*e.g.*, you must include results of performance tests in the Notification of Compliance).

(4) *Time extension.* You may submit a written request to the Administrator for a time extension documenting that, for reasons beyond your control, you may not be able to meet the 90-day deadline for submitting the Notification of Compliance after completion of testing. The Administrator will determine whether a time extension is warranted.

(k) *Failure to submit a timely notification of compliance.* (1) If you fail to postmark a Notification of Compliance by the specified date, you must cease hazardous waste burning immediately.

(2) Prior to submitting a revised Notification of Compliance as provided by paragraph (k)(3) of this section, you may burn hazardous waste only for the purpose of pretesting or comprehensive performance testing and only for a maximum of 720 hours (renewable at the discretion of the Administrator).

(3) You must submit to the Administrator a Notification of Compliance subsequent to a new comprehensive performance test before resuming hazardous waste burning.

(l) *Failure of performance test*—(1) *Comprehensive performance test.* The provisions of this paragraph do not apply to the initial comprehensive performance test if you conduct the test prior to September 30, 2003 (or a later compliance date approved under § 63.6(i)).

(i) If you determine (based on CEM recordings, results of analyses of stack samples, or results of CMS performance evaluations) that you have exceeded any emission standard during a comprehensive performance test for a mode of operation, you must cease hazardous waste burning immediately under that mode of operation. You must make this determination within 90 days following completion of the performance test.

(ii) If you have failed to demonstrate compliance with the emission standards for any mode of operation:

(A) Prior to submitting a revised Notification of Compliance as provided by paragraph (l)(1)(ii)(C) of this section, you may burn hazardous waste only for the purpose of pretesting or comprehensive performance testing under revised operating conditions, and only for a maximum of 720 hours (renewable at the discretion of the Administrator), except as provided by paragraph (l)(3) of this section;

(B) You must conduct a comprehensive performance test under revised operating conditions following the requirements for performance testing of this section; and

(C) You must submit to the Administrator a Notification of Compliance subsequent to the new comprehensive performance test.

(2) *Confirmatory performance test.* If you determine (based on CEM recordings, results of analyses of stack samples, or results of CMS performance evaluations) that you have failed the dioxin/furan emission standard during a confirmatory performance test, you must cease burning hazardous waste immediately. You must make this determination within 90 days following completion of the performance test. To burn hazardous waste in the future:

(i) You must submit to the Administrator for review and approval a test plan to conduct a comprehensive performance test to identify revised limits on the applicable dioxin/furan operating parameters specified in § 63.1209(k);

(ii) You must submit to the Administrator a Notification of Compliance with the dioxin/furan emission standard under the provisions of paragraphs (j) and (k) of this section and this paragraph (l). You must include in the Notification of Compliance the revised limits on the applicable dioxin/furan operating parameters specified in § 63.1209(k); and

(iii) Until the Notification of Compliance is submitted, you must not burn hazardous waste except for purposes of pretesting or confirmatory performance testing, and for a maximum of 720 hours (renewable at the discretion of the Administrator), except as provided by paragraph (l)(3) of this section.

(3) You may petition the Administrator to obtain written approval to burn hazardous waste in the interim prior to submitting a Notification of Compliance for purposes other than testing or pretesting. You must specify operating requirements, including limits on operating parameters, that you determine will ensure compliance with the emission standards of this subpart based on available information including data from the failed performance test. The Administrator will review, modify as necessary, and approve if warranted the interim operating requirements. An approval of interim operating requirements will include a schedule for submitting a Notification of Compliance.

(m) *Waiver of performance test.* (1) The waiver provision of this paragraph applies in addition to the provisions of § 63.7(h).

(2) You are not required to conduct performance tests to document compliance with the mercury, semivolatile metal, low volatile metal or hydrochloric acid/chlorine gas emission standards under the conditions specified below. You are deemed to be in compliance with an emission standard if the twelve-hour rolling average maximum theoretical emission concentration (MTEC) determined as specified below does not exceed the emission standard:

(i) Determine the feedrate of mercury, semivolatile metals, low volatile metals, or total chlorine and chloride from all feedstreams;

(ii) Determine the stack gas flowrate; and

(iii) Calculate a MTEC for each standard assuming all mercury, semivolatile metals, low volatile metals, or total chlorine (organic and inorganic) from all feedstreams is emitted;

(3) To document compliance with this provision, you must:

(i) Monitor and record the feedrate of mercury, semivolatile metals, low volatile metals, and total chlorine and chloride from all feedstreams according to § 63.1209(c);

(ii) Monitor with a CMS and record in the operating record the gas flowrate (either directly or by monitoring a surrogate parameter that you have correlated to gas flowrate);

(iii) Continuously calculate and record in the operating record the MTEC under the procedures of paragraph (m)(2) of this section; and

(iv) Interlock the MTEC calculated in paragraph (m)(2)(iii) of this section to the AWFCO system to stop hazardous waste burning when the MTEC exceeds the emission standard.

(4) In lieu of the requirement in paragraphs (m)(3)(iii) and (iv) of this section, you may:

(i) Identify in the Notification of Compliance a minimum gas flowrate limit and a maximum feedrate limit of mercury, semivolatile metals, low volatile metals, and/or total chlorine and chloride from all feedstreams that ensures the MTEC as calculated in paragraph (m)(2)(iii) of this section is below the applicable emission standard; and

(ii) Interlock the minimum gas flowrate limit and maximum feedrate limit of paragraph (m)(4)(i) of this section to the AWFCO system to stop hazardous waste burning when the gas flowrate or mercury, semivolatile metals, low volatile metals, and/or total chlorine and chloride feedrate exceeds the limits of paragraph (m)(4)(i) of this section.

(5) When you determine the feedrate of mercury, semivolatile metals, low volatile metals, or total chlorine and chloride for purposes of this provision, except as provided by paragraph (m)(6) of this section, you must assume that

the analyte is present at the full detection limit when the feedstream analysis determines that the analyte is not detected in the feedstream.

(6) Owners and operators of hazardous waste burning cement kilns and lightweight aggregate kilns may assume that mercury is present in raw material at half the detection limit when the raw material feedstream analysis determines that mercury is not detected.

(7) You must state in the site-specific test plan that you submit for review and approval under paragraph (e) of this section that you intend to comply with the provisions of this paragraph. You must include in the test plan documentation that any surrogate that is proposed for gas flowrate adequately correlates with the gas flowrate.

[64 FR 53038, Sept. 30, 1999, as amended at 65 FR 42299, July 10, 2000; 65 FR 67271, Nov. 9, 2000; 66 FR 35106, July 3, 2001; 66 FR 63318, Dec. 6, 2001; 67 FR 6814, Feb. 13, 2002; 67 FR 6990, Feb. 14, 2002]

§ 63.1208 What are the test methods?

(a) *References.* When required in subpart EEE of this part, the following publication is incorporated by reference, ''Test Methods for Evaluating Solid Waste, Physical/Chemical Methods,'' EPA Publication SW–846 Third Edition (November 1986), as amended by Updates I (July 1992), II (September 1994), IIA (August 1993), IIB (January 1995), and III (December 1996). The Third Edition of SW–846 and Updates I, II, IIA, IIB, and III (document number 955–001–00000–1) are available for the Superintendent of Document, U.S. Government Printing Office, Washington, DC 20402, (202) 512–1800. Copies of the Third Edition and its updates are also available from the National Technical Information Services (NTIS), 5285 Port Royal Road, Springfield, VA 22161, (703) 487–4650. Copies may be inspected at the Library, U.S. Environmental Protection Agency, 1200 Pennsylvania Ave., NW., Washington, DC 20460; or at the Office of the Federal Register, 800 North Capitol Street, NW., Suite 700, Washington, DC.

(b) *Test methods.* You must use the following test methods to determine compliance with the emissions standards of this subpart:

(1) *Dioxins and furans.* (i) You must use Method 0023A, Sampling Method for Polychlorinated Dibenzo-p-Dioxins and Polychlorinated Dibenzofurans emissions from Stationary Sources, EPA Publication SW–846, as incorporated by reference in paragraph (a) of this section, to determine compliance with the emission standard for dioxins and furans;

(ii) You must sample for a minimum of three hours, and you must collect a minimum sample volume of 2.5 dscm;

(iii) You may assume that nondetects are present at zero concentration.

(2) *Mercury.* You must use Method 29, provided in appendix A, part 60 of this chapter, to demonstrate compliance with emission standard for mercury.

(3) *Cadmium and lead.* You must use Method 29, provided in appendix A, part 60 of this chapter, to determine compliance with the emission standard for cadmium and lead (combined).

(4) *Arsenic, beryllium, and chromium.* You must use Method 29, provided in appendix A, part 60 of this chapter, to determine compliance with the emission standard for arsenic, beryllium, and chromium (combined).

(5) *Hydrochloric acid and chlorine gas.* You may use Methods 26A, 320, or 321 provided in appendix A, part 60 of this chapter, to determine compliance with the emission standard for hydrochloric acid and chlorine gas (combined). You may use Methods 320 or 321 to make major source determinations under § 63.9(b)(2)(v).

(6) *Particulate matter.* You must use Methods 5 or 5I, provided in appendix A, part 60 of this chapter, to demonstrate compliance with the emission standard for particulate matter.

(7) *Other Test Methods.* You may use applicable test methods in EPA Publication SW-846, as incorporated by reference in paragraph (a) of this section, as necessary to demonstrate compliance with requirements of this subpart, except as otherwise specified in paragraphs (b)(2)–(b)(6) of this section.

(8) *Feedstream analytical methods.* You may use any reliable analytical method to determine feedstream concentrations of metals, chlorine, and other constituents. It is your responsibility to ensure that the sampling and analysis procedures are unbiased, precise,

and that the results are representative of the feedstream. For each feedstream, you must demonstrate that:

(i) Each analyte is not present above the reported level at the 80% upper confidence limit around the mean; and

(ii) The analysis could have detected the presence of the constituent at or below the reported level at the 80% upper confidence limit around the mean. (See Guidance for Data Quality Assessment—Practical Methods for Data Analysis, EPA QA/G–9, January 1998, EPA/600/R–96/084).

(9) *Opacity*. If you determine compliance with the opacity standard under the monitoring requirements of §§ 63.1209(a)(1)(iv) and (a)(1)(v), you must use Method 9, provided in appendix A, part 60 of this chapter.

§ 63.1209 What are the monitoring requirements?

(a) *Continuous emissions monitoring systems (CEMS) and continuous opacity monitoring systems (COMS)*. (1)(i) You must use either a carbon monoxide or hydrocarbon CEMS to demonstrate and monitor compliance with the carbon monoxide and hydrocarbon standard under this subpart. You must also use an oxygen CEMS to continuously correct the carbon monoxide or hydrocarbon level to 7 percent oxygen.

(ii) For cement kilns, except as provided by paragraphs (a)(1)(iv) and (a)(1)(v) of this section, you must use a COMS to demonstrate and monitor compliance with the opacity standard under §§ 63.1204(a)(7) and (b)(7) at each point where emissions are vented from these affected sources including the bypass stack of a preheater or preheater/precalciner kiln with dual stacks.

(A) You must maintain and operate each COMS in accordance with the requirements of § 63.8(c) except for the requirements under § 63.8(c)(3). The requirements of § 63.1211(c) shall be complied with instead of § 63.8(c)(3); and

(B) Compliance is based on six-minute block average.

(iii) You must install, calibrate, maintain, and operate a particulate matter CEMS to demonstrate and monitor compliance with the particulate matter standards under this subpart. However, compliance with the requirements in this section to install, calibrate, maintain and operate the PM CEMS is not required until such time that the Agency promulgates all performance specifications and operational requirements applicable to PM CEMS.

(iv) If you operate a cement kiln subject to the provisions of this subpart and use a fabric filter with multiple stacks or an electrostatic precipitator with multiple stacks, you may, in lieu of installing the COMS required by paragraph (a)(1)(ii) of this section, comply with the opacity standard in accordance with the procedures of Method 9 to part 60 of this chapter:

(A) You must conduct the Method 9 test while the affected source is operating at the highest load or capacity level reasonably expected to occur within the day;

(B) The duration of the Method 9 test shall be at least 30 minutes each day;

(C) You must use the Method 9 procedures to monitor and record the average opacity for each six-minute block period during the test; and

(D) To remain in compliance, all six-minute block averages must not exceed the opacity standard under §§ 63.1204(a)(7) and (b)(7).

(v) If you operate a cement kiln subject to the provisions of this subpart and use a particulate matter control device that exhausts through a monovent, or if the use of a COMS in accordance with the installation specification of Performance Specification 1 (PS–1) of appendix B to part 60 of this chapter is not feasible, you may, in lieu of installing the COMS required by paragraph (a)(1)(ii) of this section, comply with the opacity standard in accordance with the procedures of Method 9 to part 60 of this chapter:

(A) You must conduct the Method 9 test while the affected source is operating at the highest load or capacity level reasonably expected to occur within the day;

(B) The duration of the Method 9 test shall be at least 30 minutes each day;

(C) You must use the Method 9 procedures to monitor and record the average opacity for each six-minute block period during the test; and

(D) To remain in compliance, all six-minute block averages must not exceed

the opacity standard under §§ 63.1204(a)(7) and (b)(7).

(2) *Performance specifications.* You must install, calibrate, maintain, and continuously operate the CEMS and COMS in compliance with the quality assurance procedures provided in the appendix to this subpart and Performance Specifications 1 (opacity), 4B (carbon monoxide and oxygen), and 8A (hydrocarbons) in appendix B, part 60 of this chapter.

(3) *Carbon monoxide readings exceeding the span.* (i) Except as provided by paragraph (a)(3)(ii) of this section, if a carbon monoxide CEMS detects a response that results in a one-minute average at or above the 3,000 ppmv span level required by Performance Specification 4B in appendix B, part 60 of this chapter, the one-minute average must be recorded as 10,000 ppmv. The one-minute 10,000 ppmv value must be used for calculating the hourly rolling average carbon monoxide level.

(ii) Carbon monoxide CEMS that use a span value of 10,000 ppmv when one-minute carbon monoxide levels are equal to or exceed 3,000 ppmv are not subject to paragraph (a)(3)(i) of this section. Carbon monoxide CEMS that use a span value of 10,000 are subject to the same CEMS performance and equipment specifications when operating in the range of 3,000 ppmv to 10,000 ppmv that are provided by Performance Specification 4B for other carbon monoxide CEMS, except:

(A) Calibration drift must be less than 300 ppmv; and

(B) Calibration error must be less than 500 ppmv.

(4) *Hydrocarbon readings exceeding the span.* (i) Except as provided by paragraph (a)(4)(ii) of this section, if a hydrocarbon CEMS detects a response that results in a one-minute average at or above the 100 ppmv span level required by Performance Specification 8A in appendix B, part 60 of this chapter, the one-minute average must be recorded as 500 ppmv. The one-minute 500 ppmv value must be used for calculating the hourly rolling average HC level.

(ii) Hydrocarbon CEMS that use a span value of 500 ppmv when one-minute hydrocarbon levels are equal to or exceed 100 ppmv are not subject to paragraph (a)(4)(i) of this section. Hydrocarbon CEMS that use a span value of 500 ppmv are subject to the same CEMS performance and equipment specifications when operating in the range of 100 ppmv to 500 ppmv that are provided by Performance Specification 8A for other hydrocarbon CEMS, except:

(A) The zero and high-level calibration gas must have a hydrocarbon level of between 0 and 100 ppmv, and between 250 and 450 ppmv, respectively;

(B) The strip chart recorder, computer, or digital recorder must be capable of recording all readings within the CEM measurement range and must have a resolution of 2.5 ppmv;

(C) The CEMS calibration must not differ by more than ±15 ppmv after each 24-hour period of the seven day test at both zero and high levels;

(D) The calibration error must be no greater than 25 ppmv; and

(E) The zero level, mid-level, and high level calibration gas used to determine calibration error must have a hydrocarbon level of 0–200 ppmv, 150–200 ppmv, and 350–400 ppmv, respectively.

(5) *Petitions to use CEMS for other standards.* You may petition the Administrator to use CEMS for compliance monitoring for particulate matter, mercury, semivolatile metals, low volatile metals, and hydrochloric acid/chlorine gas under § 63.8(f) in lieu of compliance with the corresponding operating parameter limits under this section.

(6) *Calculation of rolling averages*—(i) *Calculation of rolling averages initially.* The carbon monoxide or hydrocarbon CEMS must begin recording one-minute average values by 12:01 a.m. and hourly rolling average values by 1:01 a.m., when 60 one-minute values will be available for calculating the initial hourly rolling average for those sources that come into compliance on the regulatory compliance date. Sources that elect to come into compliance before the regulatory compliance date must begin recording one-minute and hourly rolling average values within 60 seconds and 60 minutes (when 60 one-minute values will be available for calculating the initial hourly rolling average), respectively,

from the time at which compliance begins.

(ii) *Calculation of rolling averages upon intermittent operations.* You must ignore periods of time when one-minute values are not available for calculating the hourly rolling average. When one-minute values become available again, the first one-minute value is added to the previous 59 values to calculate the hourly rolling average.

(iii) *Calculation of rolling averages when the hazardous waste feed is cutoff.* (A) Except as provided by paragraph (a)(6)(iii)(B) of this section, you must continue monitoring carbon monoxide and hydrocarbons when the hazardous waste feed is cutoff if the source is operating. You must not resume feeding hazardous waste if the emission levels exceed the standard.

(B) You are not subject to the CEMS requirements of this subpart during periods of time you meet the requirements of §63.1206(b)(1)(ii) (compliance with emissions standards for nonhazardous waste burning sources when you are not burning hazardous waste).

(7) *Operating parameter limits for hydrocarbons.* If you elect to comply with the carbon monoxide and hydrocarbon emission standard by continuously monitoring carbon monoxide with a CEMS, you must demonstrate that hydrocarbon emissions during the comprehensive performance test do not exceed the hydrocarbon emissions standard. In addition, the limits you establish on the destruction and removal efficiency (DRE) operating parameters required under paragraph (j) of this section also ensure that you maintain compliance with the hydrocarbon emission standard. If you do not conduct the hydrocarbon demonstration and DRE tests concurrently, you must establish separate operating parameter limits under paragraph (j) of this section based on each test and the more restrictive of the operating parameter limits applies.

(b) *Other continuous monitoring systems (CMS).* (1) You must use CMS (e.g., thermocouples, pressure transducers, flow meters) to document compliance with the applicable operating parameter limits under this section.

(2) Except as specified in paragraphs (b)(2)(i) and (ii) of this section, you must install and operate continuous monitoring systems other than CEMS in conformance with §63.8(c)(3) that requires you, at a minimum, to comply with the manufacturer's written specifications or recommendations for installation, operation, and calibration of the system:

(i) *Calibration of thermocouples and pyrometers.* The calibration of thermocouples must be verified at a frequency and in a manner consistent with manufacturer specifications, but no less frequent than once per year. You must operate and maintain optical pyrometers in accordance with manufacturer specifications unless otherwise approved by the Administrator. You must calibrate optical pyrometers in accordance with the frequency and procedures recommended by the manufacturer, but no less frequent than once per year, unless otherwise approved by the Administrator. And,

(ii) *Accuracy and calibration of weight measurement devices for activated carbon injection systems.* If you operate a carbon injection system the accuracy of the weight measurement device must be ±1 percent of the weight being measured. The calibration of the device must be verified at least once every three months.

(3) CMS must sample the regulated parameter without interruption, and evaluate the detector response at least once each 15 seconds, and compute and record the average values at least every 60 seconds.

(4) The span of the non-CEMS CMS detector must not be exceeded. You must interlock the span limits into the automatic waste feed cutoff system required by §63.1206(c)(3).

(5) *Calculation of rolling averages*—(i) *Calculation of rolling averages initially.* Continuous monitoring systems must begin recording one-minute average values by 12:01 a.m., hourly rolling average values by 1:01 a.m.(e.g., when 60 one-minute values will be available for calculating the initial hourly rolling average), and twelve-hour rolling averages by 12:01 p.m.(e.g., when 720 one-minute averages are available to calculate a 12-hour rolling average), for those sources that come into compliance on the regulatory compliance date. Sources that elect to come into

compliance before the regulatory compliance date must begin recording one-minute, hourly rolling average, and 12-hour rolling average values within 60 seconds, 60 minutes (when 60 one-minute values will be available for calculating the initial hourly rolling average), and 720 minutes (when 720 one-minute values will be available for calculating the initial 12-hour hourly rolling average) respectively, from the time at which compliance begins.

(ii) *Calculation of rolling averages upon intermittent operations.* You must ignore periods of time when one-minute values are not available for calculating rolling averages. When one-minute values become available again, the first one-minute value is added to the previous one-minute values to calculate rolling averages.

(iii) *Calculation of rolling averages when the hazardous waste feed is cutoff.* (A) Except as provided by paragraph (b)(5)(iii)(B) of this section, you must continue monitoring operating parameter limits with a CMS when the hazardous waste feed is cutoff if the source is operating. You must not resume feeding hazardous waste if an operating parameter exceeds its limit.

(B) You are not subject to the CMS requirements of this subpart during periods of time you meet the requirements of § 63.1206(b)(1)(ii) (compliance with emissions standards for nonhazardous waste burning sources when you are not burning hazardous waste).

(c) *Analysis of feedstreams*—(1) *General.* Prior to feeding the material, you must obtain an analysis of each feedstream that is sufficient to document compliance with the applicable feedrate limits provided by this section.

(2) *Feedstream analysis plan.* You must develop and implement a feedstream analysis plan and record it in the operating record. The plan must specify at a minimum:

(i) The parameters for which you will analyze each feedstream to ensure compliance with the operating parameter limits of this section;

(ii) Whether you will obtain the analysis by performing sampling and analysis or by other methods, such as using analytical information obtained from others or using other published or documented data or information;

(iii) How you will use the analysis to document compliance with applicable feedrate limits (*e.g.*, if you blend hazardous wastes and obtain analyses of the wastes prior to blending but not of the blended, as-fired, waste, the plan must describe how you will determine the pertinent parameters of the blended waste);

(iv) The test methods which you will use to obtain the analyses;

(v) The sampling method which you will use to obtain a representative sample of each feedstream to be analyzed using sampling methods described in appendix I, part 26, of this chapter, or an equivalent method; and

(vi) The frequency with which you will review or repeat the initial analysis of the feedstream to ensure that the analysis is accurate and up to date.

(3) *Review and approval of analysis plan.* You must submit the feedstream analysis plan to the Administrator for review and approval, if requested.

(4) *Compliance with feedrate limits.* To comply with the applicable feedrate limits of this section, you must monitor and record feedrates as follows:

(i) Determine and record the value of the parameter for each feedstream by sampling and analysis or other method;

(ii) Determine and record the mass or volume flowrate of each feedstream by a CMS. If you determine flowrate of a feedstream by volume, you must determine and record the density of the feedstream by sampling and analysis (unless you report the constituent concentration in units of weight per unit volume (e.g., mg/l)); and

(iii) Calculate and record the mass feedrate of the parameter per unit time.

(5) *Waiver of monitoring of constituents in certain feedstreams.* You are not required to monitor levels of metals or chlorine in the following feedstreams to document compliance with the feedrate limits under this section provided that you document in the comprehensive performance test plan the expected levels of the constituent in the feedstream and account for those assumed feedrate levels in documenting compliance with feedrate limits: natural gas, process air, and

feedstreams from vapor recovery systems.

(d) *Performance evaluations.* (1) The requirements of §§ 63.8(d) (Quality control program) and (e) (Performance evaluation of continuous monitoring systems) apply, except that you must conduct performance evaluations of components of the CMS under the frequency and procedures (for example, submittal of performance evaluation test plan for review and approval) applicable to performance tests as provided by § 63.1207.

(2) You must comply with the quality assurance procedures for CEMS prescribed in the appendix to this subpart.

(e) *Conduct of monitoring.* The provisions of § 63.8(b) apply.

(f) *Operation and maintenance of continuous monitoring systems.* The provisions of § 63.8(c) apply except:

(1) *Section 63.8(c)(3).* The requirements of § 63.1211(c), that requires CMSs to be installed, calibrated, and operational on the compliance date, shall be complied with instead of section 63.8(c)(3);

(2) *Section 63.8(c)(4)(ii).* The performance specifications for carbon monoxide, hydrocarbon, and oxygen CEMSs in subpart B, part 60 of this chapter that requires detectors to measure the sample concentration at least once every 15 seconds for calculating an average emission rate once every 60 seconds shall be complied with instead of section 63.8(c)(4)(ii); and

(3) Sections 63.8(c)(4)(i), (c)(5), and (c)(7)(i)(C) pertaining to COMS apply only to owners and operators of hazardous waste burning cement kilns..

(g) *Alternative monitoring requirements other than continuous emissions monitoring systems (CEMS)*—(1) *Requests to use alternative methods.* (i) You may submit an application to the Administrator under this paragraph for approval of alternative monitoring requirements to document compliance with the emission standards of this subpart. For requests to use additional CEMS, however, you must use paragraph (a)(5) of this section and § 63.8(f).

(A) The Administrator will not approve averaging periods for operating parameter limits longer than specified in this section unless you document using data or information that the longer averaging period will ensure that emissions do not exceed levels achieved during the comprehensive performance test over any increment of time equivalent to the time required to conduct three runs of the performance test.

(B) If the Administrator approves the application to use an alternative monitoring requirement, you must continue to use that alternative monitoring requirement until you receive approval under this paragraph to use another monitoring requirement.

(ii) You may submit an application to waive an operating parameter limit specified in this section based on documentation that neither that operating parameter limit nor an alternative operating parameter limit is needed to ensure compliance with the emission standards of this subpart.

(iii) You must comply with the following procedures for applications submitted under paragraphs (g)(1)(i) and (ii) of this section:

(A) *Timing of the application.* You must submit the application to the Administrator not later than with the comprehensive performance test plan.

(B) *Content of the application.* You must include in the application:

(*1*) Data or information justifying your request for an alternative monitoring requirement (or for a waiver of an operating parameter limit), such as the technical or economic infeasibility or the impracticality of using the required approach;

(*2*) A description of the proposed alternative monitoring requirement, including the operating parameter to be monitored, the monitoring approach/technique (*e.g.*, type of detector, monitoring location), the averaging period for the limit, and how the limit is to be calculated; and

(*3*) Data or information documenting that the alternative monitoring requirement would provide equivalent or better assurance of compliance with the relevant emission standard, or that it is the monitoring requirement that best assures compliance with the standard and that is technically and economically practicable.

(C) *Approval of request to use an alternative monitoring requirement or waive an operating parameter limit.* The Administrator will notify you of approval

or intention to deny approval of the request within 90 calendar days after receipt of the original request and within 60 calendar days after receipt of any supplementary information that you submit. The Administrator will not approve an alternative monitoring request unless the alternative monitoring requirement provides equivalent or better assurance of compliance with the relevant emission standard, or is the monitoring requirement that best assures compliance with the standard and that is technically and economically practicable. Before disapproving any request, the Administrator will notify you of the Administrator's intention to disapprove the request together with:

(*1*) Notice of the information and findings on which the intended disapproval is based; and

(*2*) Notice of opportunity for you to present additional information to the Administrator before final action on the request. At the time the Administrator notifies you of intention to disapprove the request, the Administrator will specify how much time you will have after being notified of the intended disapproval to submit the additional information.

(D) *Responsibility of owners and operators.* You are responsible for ensuring that you submit any supplementary and additional information supporting your application in a timely manner to enable the Administrator to consider your application during review of the comprehensive performance test plan. Neither your submittal of an application, nor the Administrator's failure to approve or disapprove the application, relieves you of the responsibility to comply with the provisions of this subpart.

(2) *Administrator's discretion to specify additional or alternative requirements.* The Administrator may determine on a case-by-case basis at any time (e.g., during review of the comprehensive performance test plan, during compliance certification review) that you may need to limit additional or alternative operating parameters (e.g., opacity in addition to or in lieu of operating parameter limits on the particulate matter control device) or that alternative approaches to establish limits on operating parameters may be necessary to document compliance with the emission standards of this subpart.

(h) *Reduction of monitoring data.* The provisions of § 63.8(g) apply.

(i) *When an operating parameter is applicable to multiple standards.* Paragraphs (j) through (p) of this section require you to establish limits on operating parameters based on comprehensive performance testing to ensure you maintain compliance with the emission standards of this subpart. For several parameters, you must establish a limit for the parameter to ensure compliance with more than one emission standard. An example is a limit on minimum combustion chamber temperature to ensure compliance with both the DRE standard of paragraph (j) of this section and the dioxin/furan standard of paragraph (k) of this section. If the performance tests for such standards are not performed simultaneously, the most stringent limit for a parameter derived from independent performance tests applies.

(j) *DRE.* To remain in compliance with the destruction and removal efficiency (DRE) standard, you must establish operating limits during the comprehensive performance test (or during a previous DRE test under provisions of § 63.1206(b)(7)) for the following parameters, unless the limits are based on manufacturer specifications, and comply with those limits at all times that hazardous waste remains in the combustion chamber (*i.e.*, the hazardous waste residence time has not transpired since the hazardous waste feed cutoff system was activated):

(1) *Minimum combustion chamber temperature.* (i) You must measure the temperature of each combustion chamber at a location that best represents, as practicable, the bulk gas temperature in the combustion zone. You must document the temperature measurement location in the test plan you submit under § 63.1207(e);

(ii) You must establish a minimum hourly rolling average limit as the average of the test run averages;

(2) *Maximum flue gas flowrate or production rate.* (i) As an indicator of gas residence time in the control device, you must establish and comply with a

limit on the maximum flue gas flowrate, the maximum production rate, or another parameter that you document in the site-specific test plan as an appropriate surrogate for gas residence time, as the average of the maximum hourly rolling averages for each run.

(ii) You must comply with this limit on a hourly rolling average basis;

(3) *Maximum hazardous waste feedrate.* (i) You must establish limits on the maximum pumpable and total (i.e., pumpable and nonpumpable) hazardous waste feedrate for each location where hazardous waste is fed.

(ii) You must establish the limits as the average of the maximum hourly rolling averages for each run.

(iii) You must comply with the feedrate limit(s) on a hourly rolling average basis;

(4) *Operation of waste firing system.* You must specify operating parameters and limits to ensure that good operation of each hazardous waste firing system is maintained.

(k) *Dioxins and furans.* You must comply with the dioxin and furans emission standard by establishing and complying with the following operating parameter limits. You must base the limits on operations during the comprehensive performance test, unless the limits are based on manufacturer specifications.

(1) *Gas temperature at the inlet to a dry particulate matter control device.* (i) For hazardous waste burning incinerators and cement kilns, if the combustor is equipped with an electrostatic precipitator, baghouse (fabric filter), or other dry emissions control device where particulate matter is suspended in contact with combustion gas, you must establish a limit on the maximum temperature of the gas at the inlet to the device on an hourly rolling average. You must establish the hourly rolling average limit as the average of the test run averages.

(ii) For hazardous waste burning lightweight aggregate kilns, you must establish a limit on the maximum temperature of the gas at the exit of the (last) combustion chamber (or exit of any waste heat recovery system) on an hourly rolling average. The limit must be established as the average of the test run averages;

(2) *Minimum combustion chamber temperature.* (i) You must measure the temperature of each combustion chamber at a location that best represents, as practicable, the bulk gas temperature in the combustion zone. You must document the temperature measurement location in the test plan you submit under §§63.1207(e) and (f);

(ii) You must establish a minimum hourly rolling average limit as the average of the test run averages.

(3) *Maximum flue gas flowrate or production rate.* (i) As an indicator of gas residence time in the control device, you must establish and comply with a limit on the maximum flue gas flowrate, the maximum production rate, or another parameter that you document in the site-specific test plan as an appropriate surrogate for gas residence time, as the average of the maximum hourly rolling averages for each run.

(ii) You must comply with this limit on a hourly rolling average basis;

(4) *Maximum waste feedrate.* (i) You must establish limits on the maximum pumpable and total (pumpable and nonpumpable) waste feedrate for each location where waste is fed.

(ii) You must establish the limits as the average of the maximum hourly rolling averages for each run.

(iii) You must comply with the feedrate limit(s) on a hourly rolling average basis;

(5) *Particulate matter operating limit.* If your combustor is equipped with an activated carbon injection system, you must establish operating parameter limits on the particulate matter control device as specified by paragraph (m)(1) of this section;

(6) *Activated carbon injection parameter limits.* If your combustor is equipped with an activated carbon injection system:

(i) *Carbon feedrate.* You must establish a limit on minimum carbon injection rate on an hourly rolling average calculated as the average of the test run averages. If your carbon injection system injects carbon at more than one location, you must establish a carbon feedrate limit for each location.

(ii) *Carrier fluid*. You must establish a limit on minimum carrier fluid (gas or liquid) flowrate or pressure drop as an hourly rolling average based on the manufacturer's specifications. You must document the specifications in the test plan you submit under §§ 63.1207(e) and (f);

(iii) *Carbon specification*. (A) You must specify and use the brand (*i.e.*, manufacturer) and type of carbon used during the comprehensive performance test until a subsequent comprehensive performance test is conducted, unless you document in the site-specific performance test plan required under §§ 63.1207(e) and (f) key parameters that affect adsorption and establish limits on those parameters based on the carbon used in the performance test.

(B) You may substitute at any time a different brand or type of carbon provided that the replacement has equivalent or improved properties compared to the carbon used in the performance test and conforms to the key sorbent parameters you identify under paragraph (k)(6)(iii)(A) of this section. You must include in the operating record documentation that the substitute carbon will provide the same level of control as the original carbon.

(7) *Carbon bed parameter limits*. If your combustor is equipped with a carbon bed system:

(i) *Monitoring bed life*. You must:

(A) Monitor performance of the carbon bed consistent with manufacturer's specifications and recommendations to ensure the carbon bed (or bed segment for sources with multiple segments) has not reached the end of its useful life to minimize dioxin/furan and mercury emissions at least to the levels required by the emission standards;

(B) Document the monitoring procedures in the operation and maintenance plan;

(C) Record results of the performance monitoring in the operating record; and

(D) Replace the bed or bed segment before it has reached the end of its useful life to minimize dioxin/furan and mercury emissions at least to the levels required by the emission standards.

(ii) *Carbon specification*. (A) You must specify and use the brand (*i.e.*, manufacturer) and type of carbon used during the comprehensive performance test until a subsequent comprehensive performance test is conducted, unless you document in the site-specific performance test plan required under §§ 63.1207(e) and (f) key parameters that affect adsorption and establish limits on those parameters based on the carbon used in the performance test.

(B) You may substitute at any time a different brand or type of carbon provided that the replacement has equivalent or improved properties compared to the carbon used in the performance test. You must include in the operating record documentation that the substitute carbon will provide an equivalent or improved level of control as the original carbon.

(iii) *Maximum temperature*. You must measure the temperature of the carbon bed at either the bed inlet or exit and you must establish a maximum temperature limit on an hourly rolling average as the average of the test run averages.

(8) *Catalytic oxidizer parameter limits*. If your combustor is equipped with a catalytic oxidizer, you must establish limits on the following parameters:

(i) *Minimum flue gas temperature at the entrance of the catalyst*. You must establish a limit on minimum flue gas temperature at the entrance of the catalyst on an hourly rolling average as the average of the test run averages.

(ii) *Maximum time in-use*. You must replace a catalytic oxidizer with a new catalytic oxidizer when it has reached the maximum service time specified by the manufacturer.

(iii) *Catalyst replacement specifications*. When you replace a catalyst with a new one, the new catalyst must be equivalent to or better than the one used during the previous comprehensive test, as measured by:

(A) Catalytic metal loading for each metal;

(B) Space time, expressed in the units s^{-1}, the maximum rated volumetric flow of combustion gas through the catalyst divided by the volume of the catalyst; and

(C) Substrate construction, including materials of construction, washcoat type, and pore density.

(iv) *Maximum flue gas temperature*. You must establish a maximum flue

gas temperature limit at the entrance of the catalyst as an hourly rolling average, based on manufacturer's specifications.

(9) *Inhibitor feedrate parameter limits.* If you feed a dioxin/furan inhibitor into the combustion system, you must establish limits for the following parameters:

(i) *Minimum inhibitor feedrate.* You must establish a limit on minimum inhibitor feedrate on an hourly rolling average as the average of the test run averages.

(ii) *Inhibitor specifications.* (A) You must specify and use the brand (*i.e.,* manufacturer) and type of inhibitor used during the comprehensive performance test until a subsequent comprehensive performance test is conducted, unless you document in the site-specific performance test plan required under §§ 63.1207(e) and (f) key parameters that affect the effectiveness of the inhibitor and establish limits on those parameters based on the inhibitor used in the performance test.

(B) You may substitute at any time a different brand or type of inhibitor provided that the replacement has equivalent or improved properties compared to the inhibitor used in the performance test and conforms to the key parameters you identify under paragraph (k)(9)(ii)(A) of this section. You must include in the operating record documentation that the substitute inhibitor will provide the same level of control as the original inhibitor.

(l) *Mercury.* You must comply with the mercury emission standard by establishing and complying with the following operating parameter limits. You must base the limits on operations during the comprehensive performance test, unless the limits are based on manufacturer specifications.

(1) *Feedrate of total mercury.* You must establish a 12-hour rolling average limit for the total feedrate of mercury in all feedstreams as the average of the test run averages, unless mercury feedrate limits are extrapolated from performance test feedrate levels under the following provisions.

(i) You may request as part of the performance test plan under §§ 63.7(b) and (c) and §§ 63.1207(e) and (f) to use the mercury feedrates and associated emission rates during the comprehensive performance test to extrapolate to higher allowable feedrate limits and emission rates.

(ii) The extrapolation methodology will be reviewed and approved, as warranted, by the Administrator. The review will consider in particular whether:

(A) Performance test metal feedrates are appropriate (*i.e.,* whether feedrates are at least at normal levels; depending on the heterogeneity of the waste, whether some level of spiking would be appropriate; and whether the physical form and species of spiked material is appropriate); and

(B) Whether the extrapolated feedrates you request are warranted considering historical metal feedrate data.

(iii) The Administrator will review the performance test results in making a finding of compliance required by §§ 63.6(f)(3) and 63.1206(b)(3) to ensure that you have interpreted emission test results properly and that the extrapolation procedure is appropriate for your source.

(2) *Wet scrubber.* If your combustor is equipped with a wet scrubber, you must establish operating parameter limits prescribed by paragraph (o)(3) of this section, except for paragraph (o)(3)(iv).

(3) *Activated carbon injection.* If your combustor is equipped with an activated carbon injection system, you must establish operating parameter limits prescribed by paragraphs (k)(5) and (k)(6) of this section.

(4) *Activated carbon bed.* If your combustor is equipped with an activated carbon bed system, you must comply with the requirements of (k)(7) of this section to assure compliance with the mercury emission standard.

(m) *Particulate matter.* You must comply with the particulate matter emission standard by establishing and complying with the following operating parameter limits. You must base the limits on operations during the comprehensive performance test, unless the limits are based on manufacturer specifications.

(1) *Control device operating parameter limits (OPLs).* (i) *Wet scrubbers.* For sources equipped with wet scrubbers,

including ionizing wet scrubbers, high energy wet scrubbers such as venturi, hydrosonic, collision, or free jet wet scrubbers, and low energy wet scrubbers such as spray towers, packed beds, or tray towers, you must establish limits on the following parameters:

(A) For high energy scrubbers only, minimum pressure drop across the wet scrubber on an hourly rolling average, established as the average of the test run averages;

(B) For all wet scrubbers:

(*1*) To ensure that the solids content of the scrubber liquid does not exceed levels during the performance test, you must either:

(*i*) Establish a limit on solids content of the scrubber liquid using a CMS or by manual sampling and analysis. If you elect to monitor solids content manually, you must sample and analyze the scrubber liquid hourly unless you support an alternative monitoring frequency in the performance test plan that you submit for review and approval; or

(*ii*) Establish a minimum blowdown rate using a CMS and either a minimum scrubber tank volume or liquid level using a CMS.

(*2*) For maximum solids content monitored with a CMS, you must establish a limit on a twelve-hour rolling average as the average of the test run averages.

(*3*) For maximum solids content measured manually, you must establish an hourly limit, as measured at least once per hour, unless you support an alternative monitoring frequency in the performance test plan that you submit for review and approval. You must establish the maximum hourly limit as the average of the manual measurement averages for each run.

(*4*) For minimum blowdown rate and either a minimum scrubber tank volume or liquid level using a CMS, you must establish a limit on an hourly rolling average as the average of the test run averages.

(C) For high energy wet scrubbers only, you must establish limits on either the minimum liquid to gas ratio or the minimum scrubber water flowrate and maximum flue gas flowrate on an hourly rolling average. If you establish limits on maximum flue gas flowrate under this paragraph, you need not establish a limit on maximum flue gas flowrate under paragraph (m)(2) of this section. You must establish these hourly rolling average limits as the average of the test run averages; and

(ii)–(iii) [Reserved]

(iv) *Other particulate matter control devices.* For each control device that is not a high energy or ionizing wet scrubber, baghouse, or electrostatic precipitator but is operated to comply with the particulate matter emission standards of this subpart, you must ensure that the control device is properly operated and maintained as required by § 63.1206(c)(7) and by monitoring the operation of the control device as follows:

(A) During each comprehensive performance test conducted to demonstrate compliance with the particulate matter emissions standard, you must establish a range of operating values for the control device that is a representative and reliable indicator that the control device is operating within the same range of conditions as during the performance test. You must establish this range of operating values as follows:

(*1*) You must select a set of operating parameters appropriate for the control device design that you determine to be a representative and reliable indicator of the control device performance.

(*2*) You must measure and record values for each of the selected operating parameters during each test run of the performance test. A value for each selected parameter must be recorded using a continuous monitor.

(*3*) For each selected operating parameter measured in accordance with the requirements of paragraph (m)(1)(iv)(A)(*1*) of this section, you must establish a minimum operating parameter limit or a maximum operating parameter limit, as appropriate for the parameter, to define the operating limits within which the control device can operate and still continuously achieve the same operating conditions as during the performance test.

(*4*) You must prepare written documentation to support the operating parameter limits established for the control device and you must include this documentation in the performance test

plan that you submit for review and approval. This documentation must include a description for each selected parameter and the operating range and monitoring frequency required to ensure the control device is being properly operated and maintained.

(B) You must install, calibrate, operate, and maintain a monitoring device equipped with a recorder to measure the values for each operating parameter selected in accordance with the requirements of paragraph (m)(1)(iv)(A)(*1*) of this section. You must install, calibrate, and maintain the monitoring equipment in accordance with the equipment manufacturer's specifications. The recorder must record the detector responses at least every 60 seconds, as required in the definition of continuous monitor.

(C) You must regularly inspect the data recorded by the operating parameter monitoring system at a sufficient frequency to ensure the control device is operating properly. An excursion is determined to have occurred any time that the actual value of a selected operating parameter is less than the minimum operating limit (or, if applicable, greater than the maximum operating limit) established for the parameter in accordance with the requirements of paragraph (m)(1)(iv)(A)(3) of this section.

(D) Operating parameters selected in accordance with paragraph (m)(1)(iv) of this section may be based on manufacturer specifications provided you support the use of manufacturer specifications in the performance test plan that you submit for review and approval.

(2) *Maximum flue gas flowrate or production rate.* (i) As an indicator of gas residence time in the control device, you must establish a limit on the maximum flue gas flowrate, the maximum production rate, or another parameter that you document in the site-specific test plan as an appropriate surrogate for gas residence time, as the average of the maximum hourly rolling averages for each run.

(ii) You must comply with this limit on a hourly rolling average basis;

(3) *Maximum ash feedrate.* Owners and operators of hazardous waste incinerators must establish a maximum ash feedrate limit as the average of the test run averages.

(n) *Semivolatile metals and low volatility metals.* You must comply with the semivolatile metal (cadmium and lead) and low volatile metal (arsenic, beryllium, and chromium) emission standards by establishing and complying with the following operating parameter limits. You must base the limits on operations during the comprehensive performance test, unless the limits are based on manufacturer specifications.

(1) *Maximum inlet temperature to dry particulate matter air pollution control device.* You must establish a limit on the maximum inlet temperature to the primary dry metals emissions control device (*e.g.*, electrostatic precipitator, baghouse) on an hourly rolling average basis as the average of the test run averages.

(2) *Maximum feedrate of semivolatile and low volatile metals.* (i) *General.* You must establish feedrate limits for semivolatile metals (cadmium and lead) and low volatile metals (arsenic, beryllium, and chromium) as follows, except as provided by paragraph (n)(2)(ii) of this section:

(A) You must establish a 12-hour rolling average limit for the feedrate of cadmium and lead, combined, in all feedstreams as the average of the test run averages;

(B) You must establish a 12-hour rolling average limit for the feedrate of arsenic, beryllium, and chromium, combined, in all feedstreams as the average of the test run averages; and

(C) You must establish a 12-hour rolling average limit for the feedrate of arsenic, beryllium, and chromium, combined, in all pumpable feedstreams as the average of the test run averages. Dual feedrate limits for both pumpable and total feedstreams are not required, however, if you base the total feedrate limit solely on the feedrate of pumpable feedstreams.

(ii) *Feedrate extrapolation.* (A) You may request as part of the performance test plan under §§ 63.7(b) and (c) and §§ 63.1207(e) and (f) to use the semivolatile metal and low volatile metal feedrates and associated emission rates during the comprehensive performance test to extrapolate to

higher allowable feedrate limits and emission rates.

(B) The extrapolation methodology will be reviewed and approved, as warranted, by the Administrator. The review will consider in particular whether:

(*1*) Performance test metal feedrates are appropriate (*i.e.*, whether feedrates are at least at normal levels; depending on the heterogeneity of the waste, whether some level of spiking would be appropriate; and whether the physical form and species of spiked material is appropriate); and

(*2*) Whether the extrapolated feedrates you request are warranted considering historical metal feedrate data.

(C) The Administrator will review the performance test results in making a finding of compliance required by §§ 63.6(f)(3) and 63.1206(b)(3) to ensure that you have interpreted emission test results properly and that the extrapolation procedure is appropriate for your source.

(3) *Control device operating parameter limits (OPLs)*. You must establish operating parameter limits on the particulate matter control device as specified by paragraph (m)(1) of this section;

(4) *Maximum total chlorine and chloride feedrate*. You must establish a 12-hour rolling average limit for the feedrate of total chlorine and chloride in all feedstreams as the average of the test run averages.

(5) *Maximum flue gas flowrate or production rate*. (i) As an indicator of gas residence time in the control device, you must establish a limit on the maximum flue gas flowrate, the maximum production rate, or another parameter that you document in the site-specific test plan as an appropriate surrogate for gas residence time, as the average of the maximum hourly rolling averages for each run.

(ii) You must comply with this limit on a hourly rolling average basis.

(o) *Hydrochloric acid and chlorine gas*. You must comply with the hydrogen chloride and chlorine gas emission standard by establishing and complying with the following operating parameter limits. You must base the limits on operations during the comprehensive performance test, unless the limits are based on manufacturer specifications.

(1) *Feedrate of total chlorine and chloride*. You must establish a 12-hour rolling average limit for the total feedrate of chlorine (organic and inorganic) in all feedstreams as the average of the test run averages.

(2) *Maximum flue gas flowrate or production rate*. (i) As an indicator of gas residence time in the control device, you must establish a limit on the maximum flue gas flowrate, the maximum production rate, or another parameter that you document in the site-specific test plan as an appropriate surrogate for gas residence time, as the average of the maximum hourly rolling averages for each run.

(ii) You must comply with this limit on a hourly rolling average basis;

(3) *Wet scrubber*. If your combustor is equipped with a wet scrubber:

(i) If your source is equipped with a high energy wet scrubber such as a venturi, hydrosonic, collision, or free jet wet scrubber, you must establish a limit on minimum pressure drop across the wet scrubber on an hourly rolling average as the average of the test run averages;

(ii) If your source is equipped with a low energy wet scrubber such as a spray tower, packed bed, or tray tower, you must establish a minimum pressure drop across the wet scrubber based on manufacturer's specifications. You must comply with the limit on an hourly rolling average;

(iii) If your source is equipped with a low energy wet scrubber, you must establish a limit on minimum liquid feed pressure to the wet scrubber based on manufacturer's specifications. You must comply with the limit on an hourly rolling average;

(iv) You must establish a limit on minimum pH on an hourly rolling average as the average of the test run averages;

(v) You must establish limits on either the minimum liquid to gas ratio or the minimum scrubber water flowrate and maximum flue gas flowrate on an hourly rolling average as the average of the test run averages. If you establish limits on maximum flue gas flowrate under this paragraph,

you need not establish a limit on maximum flue gas flowrate under paragraph (o)(2) of this section; and

(vi) You must establish a limit on minimum power input for ionizing wet scrubbers on an hourly rolling average as the average of the test run averages.

(4) *Dry scrubber*. If your combustor is equipped with a dry scrubber, you must establish the following operating parameter limits:

(i) *Minimum sorbent feedrate*. You must establish a limit on minimum sorbent feedrate on an hourly rolling average as the average of the test run averages.

(ii) *Minimum carrier fluid flowrate or nozzle pressure drop*. You must establish a limit on minimum carrier fluid (gas or liquid) flowrate or nozzle pressure drop based on manufacturer's specifications.

(iii) *Sorbent specifications*. (A) You must specify and use the brand (*i.e.*, manufacturer) and type of sorbent used during the comprehensive performance test until a subsequent comprehensive performance test is conducted, unless you document in the site-specific performance test plan required under §§63.1207(e) and (f) key parameters that affect adsorption and establish limits on those parameters based on the sorbent used in the performance test.

(B) You may substitute at any time a different brand or type of sorbent provided that the replacement has equivalent or improved properties compared to the sorbent used in the performance test and conforms to the key sorbent parameters you identify under paragraph (o)(4)(iii)(A) of this section. You must record in the operating record documentation that the substitute sorbent will provide the same level of control as the original sorbent.

(p) *Maximum combustion chamber pressure*. If you comply with the requirements for combustion system leaks under §63.1206(c)(5) by maintaining the maximum combustion chamber zone pressure lower than ambient pressure, you must monitor the pressure instantaneously and the automatic waste feed cutoff system must be engaged when negative pressure is not maintained at any time.

(q) *Operating under different modes of operation*. If you operate under different modes of operation, you must establish operating parameter limits for each mode. You must document in the operating record when you change a mode of operation and begin complying with the operating limits for an alternative mode of operation.

(1) *Operating under otherwise applicable standards after the hazardous waste residence time has transpired*. As provided by §63.1206(b)(1)(ii), you may operate under otherwise applicable requirements promulgated under sections 112 and 129 of the Clean Air Act in lieu of the substantive requirements of this subpart.

(i) The otherwise applicable requirements promulgated under sections 112 and 129 of the Clean Air Act are applicable requirements under this subpart.

(ii) You must specify (e.g., by reference) the otherwise applicable requirements as a mode of operation in your Documentation of Compliance under §63.1211(c), your Notification of Compliance under §63.1207(j), and your title V permit application. These requirements include the otherwise applicable requirements governing emission standards, monitoring and compliance, and notification, reporting, and recordkeeping.

(2) *Calculating rolling averages under different modes of operation*. When you transition to a different mode of operation, you must calculate rolling averages as follows:

(i) *Retrieval approach*. Calculate rolling averages anew using the continuous monitoring system values previously recorded for that mode of operation (i.e., you ignore continuous monitoring system values subsequently recorded under other modes of operation when you transition back to a mode of operation); or

(ii) *Start anew*. Calculate rolling averages anew without considering previous recordings.

(A) Rolling averages must be calculated as the average of the available one-minute values for the parameter until enough one-minute values are available to calculate hourly or 12-hour rolling averages, whichever is applicable to the parameter.

(B) You may not transition to a new mode of operation using this approach if the most recent operation in that

mode resulted in an exceedance of an applicable emission standard measured with a CEMS or operating parameter limit prior to the hazardous waste residence time expiring; or

(iii) *Seamless transition*. Continue calculating rolling averages using data from the previous operating mode provided that both the operating limit and the averaging period for the parameter are the same for both modes of operation.

[64 FR 53038, Sept. 30, 1999, as amended at 65 FR 42300, July 10, 2000; 65 FR 67271, Nov. 9, 2000; 66 FR 24272, May 14, 2001; 66 FR 35106, July 3, 2001; 67 FR 6815, Feb. 13, 2002; 67 FR 6991, Feb. 14, 2002]

NOTIFICATION, REPORTING AND RECORDKEEPING

§ 63.1210 What are the notification requirements?

(a) *Summary of requirements*. (1) You must submit the following notifications to the Administrator:

Reference	Notification
63.9(b)	Initial notifications that you are subject to Subpart EEE of this Part.
63.9(d)	Notification that you are subject to special compliance requirements.
63.9(j)	Notification and documentation of any change in information already provided under § 63.9.
63.1206(b)(5)(i)	Notification of changes in design, operation, or maintenance.
63.1207(e), 63.9(e), 63.9(g)(1) and (3)	Notification of performance test and continuous monitoring system evaluation, including the performance test plan and CMS performance evaluation plan.[1]
63.1210(b), 63.1207(j), 63.1207(k), 63.1207(l), 63.9(h), 63.10(d)(2), 63.10(e)(2).	Notification of compliance, including results of performance tests and continuous monitoring system performance evaluations.

[1] You may also be required on a case-by-case basis to submit a feedstream analysis plan under § 63.1209(c)(3).

(2) You must submit the following notifications to the Administrator if you request or elect to comply with alternative requirements:

Reference	Notification, request, petition, or application
63.9(i)	You may request an adjustment to time periods or postmark deadlines for submittal and review of required information.
63.10(e)(3)(ii)	You may request to reduce the frequency of excess emissions and CMS performance reports.
63.10(f)	You may request to waive recordkeeping or reporting requirements.
63.1204(d)(2)(iii)	Notification that you elect to comply with the emission averaging requirements for cement kilns with in-line raw mills.
63.1204(e)(2)(iii)	Notification that you elect to comply with the emission averaging requirements for preheater or preheater/precalciner kilns with dual stacks.
63.1206(b)(4), 63.1213, 63.6(i), 63.9(c)	You may request an extension of the compliance date for up to one year.
63.1206(b)(5)(i)(C)	You may request to burn hazardous waste for more than 720 hours and for purposes other than testing or pretesting after making a change in the design or operation that could affect compliance with emission standards and prior to submitting a revised Notification of Compliance.
63.1206(b)(8)(iii)(B)	If you elect to conduct particulate matter CEMS correlation testing and wish to have federal particulate matter and opacity standards and associated operating limits waived during the testing, you must notify the Administrator by submitting the correlation test plan for review and approval.
63.1206(b)(8)(v)	You may request approval to have the particulate matter and opacity standards and associated operating limits and conditions waived for more than 96 hours for a correlation test.
63.1206(b)(9)	Owners and operators of lightweight aggregate kilns may request approval of alternative emission standards for mercury, semivolatile metal, low volatile metal, and hydrochloric acid/chlorine gas under certain conditions.
63.1206(b)(10)	Owners and operators of cement kilns may request approval of alternative emission standards for mercury, semivolatile metal, low volatile metal, and hydrochloric acid/chlorine gas under certain conditions.

Reference	Notification, request, petition, or application
63.1206(b)(14)	Owners and operators of incinerators may elect to comply with an alternative to the particulate matter standard.
63.1206(b)(15)	Owners and operators of cement and lightweight aggregate kilns may request to comply with the alternative to the interim standards for mercury.
63.1206(c)(2)(ii)(C)	You may request to make changes to the startup, shutdown, and malfunction plan.
63.1206(c)(5)(i)(C)	You may request an alternative means of control to provide control of combustion system leaks.
63.1206(c)(5)(i)(D)	You may request other techniques to prevent fugitive emissions without use of instantaneous pressure limits.
63.1207(c)(2)	You may request to base initial compliance on data in lieu of a comprehensive performance test.
63.1207(d)(3)	You may request more than 60 days to complete a performance test if additional time is needed for reasons beyond your control.
63.1207(e)(3), 63.7(h)	You may request a time extension if the Administrator fails to approve or deny your test plan.
63.1207(h)(2)	You may request to waive current operating parameter limits during pretesting for more than 720 hours.
63.1207(f)(1)(ii)(D)	You may request a reduced hazardous waste feedstream analysis for organic hazardous air pollutants if the reduced analysis continues to be representative of organic hazardous air pollutants in your hazardous waste feedstreams.
63.1207(g)(2)(v)	You may request to operate under a wider operating range for a parameter during confirmatory performance testing.
63.1207(i)	You may request up to a one-year time extension for conducting a performance test (other than the initial comprehensive performance test) to consolidate testing with other state or federally-required testing.
63.1207(j)(4)	You may request more than 90 days to submit a Notification of Compliance after completing a performance test if additional time is needed for reasons beyond your control.
63.1207(l)(3)	After failure of a performance test, you may request to burn hazardous waste for more than 720 hours and for purposes other than testing or pretesting.
63.1209(a)(5), 63.8(f)	You may request: (A.) Approval of alternative monitoring methods for compliance with standards that are monitored with a CEMS; and (B.) approval to use a CEMS in lieu of operating parameter limits.
63.1209(g)(1)	You may request approval of: (A.) Alternative monitoring methods, except for standards that you must monitor with a continuous emission monitoring system (CEMS) and except for requests to use a CEMS in lieu of operating parameter limits; or (B.) a waiver of an operating parameter limit.
63.1209(l)(1)	You may request to extrapolate mercury feedrate limits.
63.1209(n)(2)(ii)	You may request to extrapolate semivolatile and low volatile metal feedrate limits.
63.1211(d)	You may request to use data compression techniques to record data on a less frequent basis than required by §63.1209.

(b) *Notification of compliance*. (1) The Notification of Compliance status requirements of §63.9(h) apply, except that:

(i) The notification is a Notification of Compliance, rather than compliance status;

(ii) The notification is required for the initial comprehensive performance test and each subsequent comprehensive and confirmatory performance test; and

(iii) You must postmark the notification before the close of business on the 90th day following completion of relevant compliance demonstration activity specified in this subpart rather than the 60th day as required by §63.9(h)(2)(ii).

(2) Upon postmark of the Notification of Compliance, the operating parameter limits identified in the Notification of Compliance, as applicable, shall be complied with, the limits identified in the Documentation of Compliance or a previous Notification of Compliance are no longer applicable.

(3) The Notification of Compliance requirements of §63.1207(j) also apply.

[64 FR 53038, Sept. 30, 1999, as amended at 64 FR 63211, Nov. 19, 1999; 65 FR 42301, July 10, 2000; 66 FR 24272, May 14, 2001; 67 FR 6992, Feb. 14, 2002]

§ 63.1211 What are the recordkeeping and reporting requirements?

(a) *Summary of reporting requirements.* You must submit the following reports to the Administrator:

Reference	Report
63.10(d)(4)	Compliance progress reports, if required as a condition of an extension of the compliance date granted under § 63.6(i).
63.10(d)(5)(i)	Periodic startup, shutdown, and malfunction reports.
63.10(d)(5)(ii)	Immediate startup, shutdown, and malfunction reports.
63.10(e)(3)	Excessive emissions and continuous monitoring system performance report and summary report.
63.1206(c)(2)(ii)(B)	Startup, shutdown, and malfunction plan.
63.1206(c)(3)(vi)	Excessive exceedances reports.
63.1206(c)(4)(iv)	Emergency safety vent opening reports.

(b) *Summary of recordkeeping requirements.* You must retain the following in the operating record:

Reference	Document, data, or information
63.1200, 63.10(b) and (c)	General. Information required to document and maintain compliance with the regulations of Subpart EEE, including data recorded by continuous monitoring systems (CMS), and copies of all notifications, reports, plans, and other documents submitted to the Administrator.
63.1204(d)(1)(ii)	Documentation of mode of operation changes for cement kilns with in-line raw mills.
63.1204(d)(2)(ii)	Documentation of compliance with the emission averaging requirements for cement kilns with in-line raw mills.
63.1204(e)(2)(ii)	Documentation of compliance with the emission averaging requirements for preheater or preheater/precalciner kilns with dual stacks.
63.1206(b)(1)(ii)	If you elect to comply with all applicable requirements and standards promulgated under authority of the Clean Air Act, including Sections 112 and 129, in lieu of the requirements of Subpart EEE when not burning hazardous waste, you must document in the operating record that you are in compliance with those requirements.
63.1206(b)(5)(ii)	Documentation that a change will not adversely affect compliance with the emission standards or operating requirements.
63.1206(b)(11)	Calculation of hazardous waste residence time.
63.1206(c)(2)	Startup, shutdown, and malfunction plan.
63.1206(c)(2)(v)(A)	Documentation of your investigation and evaluation of excessive exceedances during malfunctions.
63.1206(c)(3)(v)	Corrective measures for any automatic waste feed cutoff that results in an exceedance of an emission standard or operating parameter limit.
63.1206(c)(3)(vii)	Documentation and results of the automatic waste feed cutoff operability testing.
63.1206(c)(4)(ii)	Emergency safety vent operating plan.
63.1206(c)(4)(iii)	Corrective measures for any emergency safety vent opening.
63.1206(c)(5)(ii)	Method used for control of combustion system leaks.
63.1206(c)(6)	Operator training and certification program.
63.1206(c)(7)(i)(D)	Operation and maintenance plan.
63.1209(c)(2)	Feedstream analysis plan.
63.1209(k)(6)(iii), 63.1209(k)(7)(ii), 63.1209(k)(9)(ii), 63.1209(o)(4)(iii).	Documentation that a substitute activated carbon, dioxin/furan formation reaction inhibitor, or dry scrubber sorbent will provide the same level of control as the original material.
63.1209(k)(7)(i)(C)	Results of carbon bed performance monitoring.
63.1209(q)	Documentation of changes in modes of operation.
63.1211(c)	Documentation of compliance.

(c) *Documentation of compliance.*

(1) By the compliance date, you must develop and include in the operating record a Documentation of Compliance. You are not subject to this requirement, however, if you submit a Notification of Compliance under § 63.1207(j) prior to the compliance date.

(2) The Documentation of Compliance must identify the applicable emission standards under this subpart and the limits on the operating parameters under §63.1209 that will ensure compliance with those emission standards.

(3) You must include a signed and dated certification in the Documentation of Compliance that:

(i) Required CEMs and CMS are installed, calibrated, and continuously operating in compliance with the requirements of this subpart; and

(ii) Based on an engineering evaluation prepared under your direction or supervision in accordance with a system designed to ensure that qualified personnel properly gathered and evaluated the information and supporting documentation, and considering at a minimum the design, operation, and maintenance characteristics of the combustor and emissions control equipment, the types, quantities, and characteristics of feedstreams, and available emissions data:

(A) You are in compliance with the emission standards of this subpart; and

(B) The limits on the operating parameters under §63.1209 ensure compliance with the emission standards of this subpart.

(4) You must comply with the emission standards and operating parameter limits specified in the Documentation of Compliance.

(d) *Data compression*. You may submit a written request to the Administrator for approval to use data compression techniques to record data from CMS, including CEMS, on a frequency less than that required by §63.1209. You must submit the request for review and approval as part of the comprehensive performance test plan.

(1) You must record a data value at least once each ten minutes.

(2) For each CEMS or operating parameter for which you request to use data compression techniques, you must recommend:

(i) A fluctuation limit that defines the maximum permissible deviation of a new data value from a previously generated value without requiring you to revert to recording each one-minute value.

(A) If you exceed a fluctuation limit, you must record each one-minute value for a period of time not less than ten minutes.

(B) If neither the fluctuation limit nor the data compression limit are exceeded during that period of time, you may reinitiate recording data values on a frequency of at least once each ten minutes; and

(ii) A data compression limit defined as the closest level to an operating parameter limit or emission standard at which reduced data recording is allowed.

(A) Within this level and the operating parameter limit or emission standard, you must record each one-minute average.

(B) The data compression limit should reflect a level at which you are unlikely to exceed the specific operating parameter limit or emission standard, considering its averaging period, with the addition of a new one-minute average.

[64 FR 53038, Sept. 30, 1999, as amended at 64 FR 63212, Nov. 19, 1999; 65 FR 42301, July 10, 2000; 66 FR 24272, May 14, 2001; 66 FR 35106, July 3, 2001; 67 FR 6993, Feb. 14, 2002]

OTHER

§63.1213 How can the compliance date be extended to install pollution prevention or waste minimization controls?

(a) *Applicability*. You may request from the Administrator or State with an approved title V program an extension of the compliance date of up to one year. An extension may be granted if you can reasonably document that the installation of pollution prevention or waste minimization measures will significantly reduce the amount and/or toxicity of hazardous wastes entering the feedstream(s) of the hazardous waste combustor(s), and that you could not install the necessary control measures and comply with the emission standards and operating requirements of this subpart within three years after their effective date.

(b) *Requirements for requesting an extension*. (1) You must make your requests for a (up to) one-year extension in writing, and it must be received not later than 12 months before the compliance date. The request must contain the following information:

(i) A description of pollution prevention or waste minimization controls that, when installed, will significantly reduce the amount and/or toxicity of hazardous wastes entering the feedstream(s) of the hazardous waste combustor(s). Pollution prevention or waste minimization measures may include: equipment or technology modifications, reformulation or redesign of products, substitution of raw materials, improvements in work practices, maintenance, training, inventory control, or recycling practices conducted as defined in § 261.1(c) of this chapter;

(ii) A description of other pollution controls to be installed that are necessary to comply with the emission standards and operating requirements;

(iii) A reduction goal or estimate of the annual reductions in quantity and/or toxicity of hazardous waste(s) entering combustion feedstream(s) that you will achieve by installing the proposed pollution prevention or waste minimization measures;

(iv) A comparison of reductions in the amounts and/or toxicity of hazardous wastes combusted after installation of pollution prevention or waste minimization measures to the amounts and/or toxicity of hazardous wastes combusted prior to the installation of these measures. If the difference is less than a fifteen percent reduction, include a comparison to pollution prevention and waste minimization reductions recorded during the previous five years;

(v) Reasonable documentation that installation of the pollution prevention or waste minimization changes will not result in a net increase (except for documented increases in production) of hazardous constituents released to the environment through other emissions, wastes or effluents;

(vi) Reasonable documentation that the design and installation of waste minimization and other measures that are necessary for compliance with the emission standards and operating requirements of this subpart cannot otherwise be installed within the three year compliance period, and

(vii) The information required in § 63.6(i)(6)(i)(B) through (D).

(2) You may enclose documentation prepared under an existing State-required pollution prevention program that contains the information prescribed in paragraph (b) of this section with a request for extension in lieu of complying with the time extension requirements of that paragraph.

(c) *Approval of request for extension of compliance date.* Based on the information provided in any request made under paragraph (a) of this section, the Administrator or State with an approved title V program may grant an extension of the compliance date of this subpart. The extension will be in writing in accordance with §§ 63.6(i)(10)(i) through 63.6(i)(10)(v)(A).

[57 FR 61992, Dec. 29, 1992, as amended at 67 FR 6994, Feb. 14, 200]

TABLE 1 TO SUBPART EEE OF PART 63—GENERAL PROVISIONS APPLICABLE TO SUBPART EEE

TABLE 1 TO SUBPART EEE.—GENERAL PROVISIONS APPLICABLE TO SUBPART EEE

Reference	Applies to subpart EEE	Explanation
63.1	Yes.	
63.2	Yes.	
63.3	Yes.	
63.4	Yes..	
63.5	Yes.	
63.6(a), (b), (c), (d), and (e)	Yes.	
63.6(f)	Yes	Except that the performance test requirements of Sec. 63.1207 apply instead of § 63.6(f)(2)(iii)(B).
63.6(g) and (h)	Yes.	
63.6(i)	Yes	Section 63.1213 specifies that the compliance date may also be extended for inability to install necessary emission control equipment by the compliance date because of implementation of pollution prevention or waste minimization controls.
63.6(j)	Yes.	
63.7(a)	Yes	Except § 63.1207(e)(3) allows you to petition the Administrator under § 63.7(h) to provide an extension of time to conduct a performance test.

TABLE 1 TO SUBPART EEE.—GENERAL PROVISIONS APPLICABLE TO SUBPART EEE—Continued

Reference	Applies to subpart EEE	Explanation
63.7(b)	Yes	Except § 63.1207(e) requires you to submit the site-specific test plan for approval at least one year before the comprehensive performance test is scheduled to begin.
63.7(c)	Yes	Except § 63.1207(e) requires you to submit the site-specific test plan (including the quality assurance provisions under § 63.7(c)) for approval at least one year before the comprehensive performance test is scheduled to begin.
63.7(d)	Yes.	
63.7(e)	Yes	Except § 63.1207 prescribes operations during performance testing and § 63.1209 specifies operating limits that will be established during performance testing (such that testing is likely to be representative of the extreme range of normal performance).
63.7(f)	Yes.	
63.7(g)	Yes	Except § 63.1207(j) requiring that you submit the results of the performance test (and the notification of compliance) within 90 days of completing the test, unless the Administrator grants a time extension, applies instead of § 63.7(g)(1).
63.7(h)	Yes	Except § 63.1207(c)(2) allows data in lieu of the initial comprehensive performance test, and § 63.1207(m) provides a waiver of certain performance tests. You must submit requests for these waivers with the site-specific test plan.
63.8(a) and (b)	Yes.	
63.8(c)	Yes	Except: (1) § 63.1211(c) that requires you to install, calibrate, and operate CMS by the compliance date applies instead of § 63.8(c)(3); and (2) the performance specifications for CO, HC, and O2 CEMS in subpart B, of this chapter requiring that the detectors measure the sample concentration at least once every 15 seconds for calculating an average emission level once every 60 seconds apply instead of § 63.8(c)(4)(ii).
63.8(d)	Yes.	
63.8(e)	Yes	Except § 63.1207(e) requiring you to submit the site-specific comprehensive performance test plan and the CMS performance evaluation test plan for approval at least one year prior to the planned test date applies instead of §§ 63.8(e)(2) and (3)(iii).
63.8(f) and (g)	Yes.	
63.9(a)	Yes.	
63.9(b)	Yes	*Note:* Section 63.9(b)(1)(ii) pertains to notification requirements for area sources that become a major source, and § 63.9(b)(2)(v) requires a major source determination. Although area sources are subject to all provisions of this subpart (Subpart EEE), these sections nonetheless apply because the major source determination may affect the applicability of part 63 standards or title V permit requirements to other sources (i.e., other than a hazardous waste combustor) of hazardous air pollutants at the facility.
63.9(c) and (d)	Yes.	
63.9(e)	Yes	Except § 63.1207(e) which requires you to submit the comprehensive performance test plan for approval one year prior to the planned performance test date applies instead of § 63.9(e).
63.9(f)	Yes	Section 63.9(f) applies if you are allowed under § 63.1209(a)(1)(v) to use visible determination of opacity for compliance in lieu of a COMS.
63.9(g)	Yes	Except § 63.9(g)(2) pertaining to COMS does not apply.
63.9(h)	Yes	Except § 63.1207(j) requiring you to submit the notification of compliance within 90 days of completing a performance test unless the Administrator grants a time extension applies instead of § 63.9(h)(2)(iii). Note: Even though area sources are subject to this subpart, the major source determination required by § 63.9(h)(2)(i)(E) is applicable to hazardous waste combustors for the reasons discussed above.
63.9(i) and (j)	Yes.	

TABLE 1 TO SUBPART EEE.—GENERAL PROVISIONS APPLICABLE TO SUBPART EEE—Continued

Reference	Applies to subpart EEE	Explanation
63.10	Yes	Except reports of performance test results required under §63.10(d)(2) may be submitted up to 90 days after completion of the test.
63.11	No.	
63.12–63.15	Yes.	

[67 FR 6994, Feb. 14, 2002]

APPENDIX TO SUBPART EEE OF PART 63—QUALITY ASSURANCE PROCEDURES FOR CONTINUOUS EMISSIONS MONITORS USED FOR HAZARDOUS WASTE COMBUSTORS

1. Applicability and Principle

1.1 Applicability. These quality assurance requirements are used to evaluate the effectiveness of quality control (QC) and quality assurance (QA) procedures and the quality of data produced by continuous emission monitoring systems (CEMS) that are used for determining compliance with the emission standards on a continuous basis as specified in the applicable regulation. The QA procedures specified by these requirements represent the minimum requirements necessary for the control and assessment of the quality of CEMS data used to demonstrate compliance with the emission standards provided under this subpart EEE of part 63. Owners and operators must meet these minimum requirements and are encouraged to develop and implement a more extensive QA program. These requirements supersede those found in part 60, Appendix F, of this chapter. Appendix F does not apply to hazardous waste-burning devices.

1.2 Principle. The QA procedures consist of two distinct and equally important functions. One function is the assessment of the quality of the CEMS data by estimating accuracy. The other function is the control and improvement of the quality of the CEMS data by implementing QC policies and corrective actions. These two functions form a control loop. When the assessment function indicates that the data quality is inadequate, the source must immediately stop burning hazardous waste. The CEM data control effort must be increased until the data quality is acceptable before hazardous waste burning can resume.

a. In order to provide uniformity in the assessment and reporting of data quality, this procedure explicitly specifies the assessment methods for response drift and accuracy. The methods are based on procedures included in the applicable performance specifications provided in appendix B to part 60 of this chapter. These procedures also require the analysis of the EPA audit samples concurrent with certain reference method (RM) analyses as specified in the applicable RM's.

b. Because the control and corrective action function encompasses a variety of policies, specifications, standards, and corrective measures, this procedure treats QC requirements in general terms to allow each source owner or operator to develop a QC system that is most effective and efficient for the circumstances.

2. Definitions

2.1 *Continuous Emission Monitoring System (CEMS)*. The total equipment required for the determination of a pollutant concentration. The system consists of the following major subsystems:

2.1.1 *Sample Interface*. That portion of the CEMS used for one or more of the following: sample acquisition, sample transport, and sample conditioning, or protection of the monitor from the effects of the stack effluent.

2.1.2 *Pollutant Analyzer*. That portion of the CEMS that senses the pollutant concentration and generates a proportional output.

2.1.3 *Diluent Analyzer*. That portion of the CEMS that senses the diluent gas (O2) and generates an output proportional to the gas concentration.

2.1.4 *Data Recorder*. That portion of the CEMS that provides a permanent record of the analyzer output. The data recorder may provide automatic data reduction and CEMS control capabilities.

2.2 *Relative Accuracy (RA)*. The absolute mean difference between the pollutant concentration determined by the CEMS and the value determined by the reference method (RM) plus the 2.5 percent error confidence coefficient of a series of test divided by the mean of the RM tests or the applicable emission limit.

2.3 *Calibration Drift (CD)*. The difference in the CEMS output readings from the established reference value after a stated period of operation during which no unscheduled maintenance, repair, or adjustment took place.

2.4 *Zero Drift (ZD)*. The difference in CEMS output readings at the zero pollutant level after a stated period of operation during which no unscheduled maintenance, repair, or adjustment took place.

2.5 *Calibration Standard.* Calibration standards produce a known and unchanging response when presented to the pollutant analyzer portion of the CEMS, and are used to calibrate the drift or response of the analyzer.

2.6 *Relative Accuracy Test Audit (RATA).* Comparison of CEMS measurements to reference method measurements in order to evaluate relative accuracy following procedures and specification given in the appropriate performance specification.

2.7 *Absolute Calibration Audit (ACA).* Equivalent to calibration error (CE) test defined in the appropriate performance specification using NIST traceable calibration standards to challenge the CEMS and assess accuracy.

2.8 *Rolling Average.* The average emissions, based on some (specified) time period, calculated every minute from a one-minute average of four measurements taken at 15-second intervals.

3. QA/QC Requirements

3.1 QC Requirements. a. Each owner or operator must develop and implement a QC program. At a minimum, each QC program must include written procedures describing in detail complete, step-by-step procedures and operations for the following activities.

1. Checks for component failures, leaks, and other abnormal conditions.
2. Calibration of CEMS.
3. CD determination and adjustment of CEMS.
4. Integration of CEMS with the automatic waste feed cutoff (AWFCO) system.
5. Preventive Maintenance of CEMS (including spare parts inventory).
6. Data recording, calculations, and reporting.
7. Checks of record keeping.
8. Accuracy audit procedures, including sampling and analysis methods.
9. Program of corrective action for malfunctioning CEMS.
10. Operator training and certification.
11. Maintaining and ensuring current certification or naming of cylinder gasses, metal solutions, and particulate samples used for audit and accuracy tests, daily checks, and calibrations.

b. Whenever excessive inaccuracies occur for two consecutive quarters, the current written procedures must be revised or the CEMS modified or replaced to correct the deficiency causing the excessive inaccuracies. These written procedures must be kept on record and available for inspection by the enforcement agency.

3.2 QA Requirements. Each source owner or operator must develop and implement a QA plan that includes, at a minimum, the following.

1. QA responsibilities (including maintaining records, preparing reports, reviewing reports).
2. Schedules for the daily checks, periodic audits, and preventive maintenance.
3. Check lists and data sheets.
4. Preventive maintenance procedures.
5. Description of the media, format, and location of all records and reports.
6. Provisions for a review of the CEMS data at least once a year. Based on the results of the review, the owner or operator must revise or update the QA plan, if necessary.

4. CD and ZD Assessment and Daily System Audit

4.1 *CD and ZD Requirement.* Owners and operators must check, record, and quantify the ZD and the CD at least once daily (approximately 24 hours) in accordance with the method prescribed by the manufacturer. The CEMS calibration must, at a minimum, be adjusted whenever the daily ZD or CD exceeds the limits in the Performance Specifications. If, on any given ZD and/or CD check the ZD and/or CD exceed(s) two times the limits in the Performance Specifications, or if the cumulative adjustment to the ZD and/or CD (see Section 4.2) exceed(s) three times the limits in the Performance Specifications, hazardous waste burning must immediately cease and the CEMS must be serviced and recalibrated. Hazardous waste burning cannot resume until the owner or operator documents that the CEMS is in compliance with the Performance Specifications by carrying out an ACA.

4.2 *Recording Requirements for Automatic ZD and CD Adjusting Monitors.* Monitors that automatically adjust the data to the corrected calibration values must record the unadjusted concentration measurement prior to resetting the calibration, if performed, or record the amount of the adjustment.

4.3 *Daily System Audit.* The audit must include a review of the calibration check data, an inspection of the recording system, an inspection of the control panel warning lights, and an inspection of the sample transport and interface system (e.g., flowmeters, filters, etc.) as appropriate.

4.4 *Data Recording and Reporting.* All measurements from the CEMS must be retained in the operating record for at least 5 years.

5. Performance Evaluation for CO, O_2, and HC CEMS

Carbon Monoxide (CO), Oxygen (O_2), and Hydrocarbon (HC) CEMS. An Absolute Calibration Audit (ACA) must be conducted quarterly, and a Relative Accuracy Test Audit (RATA) (if applicable, see sections 5.1 and 5.2) must be conducted yearly. An Interference Response Tests must be performed whenever an ACA or a RATA is conducted.

When a performance test is also required under § 63.1207 to document compliance with emission standards, the RATA must coincide with the performance test. The audits must be conducted as follows.

5.1 *Relative Accuracy Test Audit (RATA).* This requirement applies to O_2 and CO CEMS. The RATA must be conducted at least yearly. Conduct the RATA as described in the RA test procedure (or alternate procedures section) described in the applicable Performance Specifications. In addition, analyze the appropriate performance audit samples received from the EPA as described in the applicable sampling methods.

5.2 *Absolute Calibration Audit (ACA).* The ACA must be conducted at least quarterly except in a quarter when a RATA (if applicable, see section 5.1) is conducted instead. Conduct an ACA as described in the calibration error (CE) test procedure described in the applicable Performance Specifications.

5.3 *Interference Response Test.* The interference response test must be conducted whenever an ACA or RATA is conducted. Conduct an interference response test as described in the applicable Performance Specifications.

5.4 *Excessive Audit Inaccuracy.* If the RA from the RATA or the CE from the ACA exceeds the criteria in the applicable Performance Specifications, hazardous waste burning must cease immediately. Hazardous waste burning cannot resume until the owner or operator takes corrective measures and audit the CEMS with a RATA to document that the CEMS is operating within the specifications.

6. Other Requirements

6.1 *Performance Specifications.* CEMS used by owners and operators of HWCs must comply with the following performance specifications in appendix B to part 60 of this chapter:

TABLE I: PERFORMANCE SPECIFICATIONS FOR CEMS

CEMS	Performance specification
Carbon monoxide	4B
Oxygen	4B
Total hydrocarbons	8A

6.2 *Downtime due to Calibration.* Facilities may continue to burn hazardous waste for a maximum of 20 minutes while calibrating the CEMS. If all CEMS are calibrated at once, the facility must have twenty minutes to calibrate all the CEMS. If CEMS are calibrated individually, the facility must have twenty minutes to calibrate each CEMS. If the CEMS are calibrated individually, other CEMS must be operational while the individual CEMS is being calibrated.

6.3 Span of the CEMS.

6.3.1 *CO CEMS.* The CO CEM must have two ranges, a low range with a span of 200 ppmv and a high range with a span of 3000 ppmv at an oxygen correction factor of 1. A one-range CEM may be used, but it must meet the performance specifications for the low range in the specified span of the low range.

6.3.2 *O_2 CEMS.* The O_2 CEM must have a span of 25 percent. The span may be higher than 25 percent if the O_2 concentration at the sampling point is greater than 25 percent.

6.3.3 *HC CEMS.* The HC CEM must have a span of 100 ppmv, expressed as propane, at an oxygen correction factor of 1.

6.3.4 *CEMS Span Values.* When the Oxygen Correction Factor is Greater than 2. When an owner or operator installs a CEMS at a location of high ambient air dilution, *i.e.*, where the maximum oxygen correction factor as determined by the permitting agency is greater than 2, the owner or operator must install a CEM with a lower span(s), proportionate to the larger oxygen correction factor, than those specified above.

6.3.5 *Use of Alternative Spans.* Owner or operators may request approval to use alternative spans and ranges to those specified. Alternate spans must be approved in writing in advance by the Administrator. In considering approval of alternative spans and ranges, the Administrator will consider that measurements beyond the span will be recorded as values at the maximum span for purposes of calculating rolling averages.

6.3.6 *Documentation of Span Values.* The span value must be documented by the CEMS manufacturer with laboratory data.

6.4.1 *Moisture Correction.* Method 4 of appendix A, part 60 of this chapter, must be used to determine moisture content of the stack gasses.

6.4.2 *Oxygen Correction Factor.* Measured pollutant levels must be corrected for the amount of oxygen in the stack according to the following formula:

$$P_c = P_m \times 14/(E - Y)$$

Where:

P_c = concentration of the pollutant or standard corrected to 7 percent oxygen, dry basis;

P_m = measured concentration of the pollutant, dry basis;

E = volume fraction of oxygen in the combustion air fed into the device, on a dry basis (normally 21 percent or 0.21 if only air is fed);

Y = measured fraction of oxygen on a dry basis at the sampling point.

The oxygen correction factor is:

$$OCF = 14/(E - Y)$$

6.4.3 *Temperature Correction.* Correction values for temperature are obtainable from standard reference materials.

6.5 *Rolling Average.* A rolling average is the arithmetic average of all one-minute averages over the averaging period.

6.5.1 *One-Minute Average for CO and HHC CEMS.* One-minute averages are the arithmetic average of the four most recent 15-second observations and must be calculated using the following equation:

$$\bar{c} = \sum_{i=1}^{4} \frac{c_i}{4}$$

Where:

$\bar{c}$ = the one minute average

c_i = a fifteen-second observation from the CEM

Fifteen second observations must not be rounded or smoothed. Fifteen-second observations may be disregarded only as a result of a failure in the CEMS and allowed in the source's quality assurance plan at the time of the CEMS failure. One-minute averages must not be rounded, smoothed, or disregarded.

6.5.2 Ten Minute Rolling Average Equation. The ten minute rolling average must be calculated using the following equation:

$$C_{RA} = \sum_{i=1}^{10} \frac{\bar{c}_i}{10}$$

Where:

C_{RA} = The concentration of the standard, expressed as a rolling average

$\bar{c}_i$ = a one minute average

6.5.3 *Hourly Rolling Average Equation for CO and THC CEMS and Operating Parameter Limits.* The rolling average, based on a specific number integer of hours, must be calculated using the following equation:

$$C_{RA} = \sum_{i=1}^{60} \frac{\bar{c}_i}{60}$$

Where:

c_{RA} = The concentration of the standard, expressed as a rolling average

$\bar{c}_i$ = a one minute average

6.5.4 Averaging Periods for CEMS other than CO and THC. The averaging period for CEMS other than CO and THC CEMS must be calculated as a rolling average of all one-hour values over the averaging period. An hourly average is comprised of 4 measurements taken at equally spaced time intervals, or at most every 15 minutes. Fewer than 4 measurements might be available within an hour for reasons such as facility downtime or CEMS calibration. If at least two measurements (30 minutes of data) are available, an hourly average must be calculated. The *n*-hour rolling average is calculated by averaging the *n* most recent hourly averages.

6.6 Units of the Standards for the Purposes of Recording and Reporting Emissions. Emissions must be recorded and reported expressed after correcting for oxygen, temperature, and moisture. Emissions must be reported in metric, but may also be reported in the English system of units, at 7 percent oxygen, 20 °C, and on a dry basis.

6.7 Rounding and Significant Figures. Emissions must be rounded to two significant figures using ASTM procedure E–29–90 or its successor. Rounding must be avoided prior to rounding for the reported value.

7. Bibliography

1. 40 CFR part 60, appendix F, ''Quality Assurance Procedures: Procedure 1. Quality Assurance Requirements for Gas continuous Emission Monitoring Systems Used For Compliance Determination''.

[64 FR 53038, Sept. 30, 1999, as amended at 65 FR 42301, July 10, 2000]

Subpart FFF [Reserved]

Subpart GGG—National Emission Standards for Pharmaceuticals Production

SOURCE: 63 FR 50326, Sept. 21, 1998, unless otherwise noted.

§63.1250 Applicability.

(a) *Definition of affected source.* (1) The affected source subject to this subpart consists of the pharmaceutical manufacturing operations as defined in §63.1251. Except as specified in paragraph (d) of this section, the provisions of this subpart apply to pharmaceutical manufacturing operations that meet the criteria specified in paragraphs (a)(1) (i) through (iii) of this section:

(i) Manufacture a pharmaceutical product as defined in §63.1251;

(ii) Are located at a plant site that is a major source as defined in section 112(a) of the Act; and

(iii) Process, use, or produce HAP.

(2) Determination of the applicability of this subpart shall be reported as part of an operating permit application or

as otherwise specified by the permitting authority.

(b) *New source applicability*. A new affected source subject to this subpart and to which the requirements for new sources apply is: An affected source for which construction or reconstruction commenced after April 2, 1997, and the standard was applicable at the time of construction or reconstruction; or a pharmaceutical manufacturing process unit (PMPU) dedicated to manufacturing a single product that has the potential to emit 10 tons per year of any one HAP or 25 tons per year of combined HAP for which construction commenced after April 2, 1997 or reconstruction commenced after October 21, 1999.

(c) *General Provisions*. Table 1 of this subpart specifies and clarifies the provisions of subpart A of this part that apply to an owner or operator of an affected source subject to this subpart. The provisions of subpart A specified in Table 1 are the only provisions of subpart A that apply to an affected source subject to this subpart.

(d) *Processes exempted from the affected source*. The provisions of this subpart do not apply to research and development facilities.

(e) *Storage tank ownership determination*. The owner or operator shall follow the procedures specified in paragraphs (e)(1) through (5) of this section to determine to which PMPU a storage tank shall belong. If an owner or operator produces only pharmaceutical products, the procedures specified in paragraphs (e)(1) through (5) of this section are required only to determine applicability and demonstrate compliance with the pollution-prevention alternative specified in § 63.1252(e), or to determine new source applicability for a PMPU dedicated to manufacturing a single product as specified in paragraph (b) of this section.

(1) If a storage tank is dedicated to a single PMPU, the storage tank shall belong to that PMPU.

(2) If a storage tank is shared among process units (including at least one PMPU), then the storage tank shall belong to the process unit located on the same plant site as the storage tank that has the greatest annual volume input into or output from the storage tank (i.e., said PMPU or process unit has the predominant use of the storage tank).

(3) If predominant use cannot be determined for a storage tank that is shared among process units (including at least one PMPU), then the owner or operator shall assign the storage tank to any one of the PMPU's that shares it and is also subject to this subpart.

(4) If the predominant use of a storage tank varies from year to year, then predominant use shall be determined based on the utilization that occurred during the year preceding September 21, 1998 for existing affected sources. For new affected sources, predominant use will be based on the first year after initial startup. The determination of predominant use shall be reported in the Notification of Compliance Status required by § 63.1260(f). If the predominant use changes, the redetermination of predominant use shall be reported in the next Periodic report.

(5) If the storage tank begins receiving material from (or sending material to) another PMPU, or ceases to receive material from (or send material to) a PMPU, or if the applicability of this subpart to a storage tank has been determined according to the provisions of paragraphs (e)(1) through (4) of this section and there is a significant change in the use of the storage tank that could reasonably change the predominant use, the owner or operator shall reevaluate the applicability of this subpart to the storage tank and report such changes to EPA in the next Periodic report.

(f) *Compliance dates*. The compliance dates for affected sources are as follows:

(1) An owner or operator of an existing affected source must comply with the provisions of this subpart no later than October 21, 2002.

(2) An owner or operator of a new or reconstructed affected source must comply with the provisions of this subpart on August 29, 2000 or upon startup, whichever is later.

(3) Notwithstanding the requirements of paragraph (f)(2) of this section, a new source which commences construction or reconstruction after April 2, 1997 and before September 21, 1998 shall

not be required to comply with this subpart until September 21, 2001 if:

(i) The requirements of this subpart are more stringent than the requirements of this subpart in effect before August 29, 2000 and contained in the 40 CFR, part (63.1200–end), edition revised as of July 1, 2000; and

(ii) The owner or operator complies with the requirements published on April 2, 1997 (62 FR 15754) during the period until September 21, 2001.

(4) Notwithstanding the requirements of paragraph (f)(2) of this section, a new source which commences construction or reconstruction after September 21, 1998 and before April 10, 2000 shall not be required to comply with this subpart until October 21, 2002 if:

(i) The requirements of this subpart are more stringent than the requirements of this subpart in effect before August 29, 2000; and

(ii) The owner or operator complies with the requirements of this subpart in effect before August 29, 2000 during the period between startup and October 21, 2002.

(5) Notwithstanding the requirements of paragraph (f)(2) of this section, a new source which commences construction or reconstruction after April 10, 2000 and before August 29, 2000 shall not be required to comply with this subpart until August 29, 2001 if:

(i) The requirements of this subpart are more stringent than the requirements published on April 10, 2000 (65 FR 19152); and

(ii) The owner or operator complies with the requirements of this subpart in effect before August 29, 2000 during the period between startup and August 29, 2001.

(6) Pursuant to section 112(i)(3)(B) of the Act, an owner or operator may request an extension allowing the existing source up to 1 additional year to comply with section 112(d) standards.

(i) For purposes of this subpart, a request for an extension shall be submitted no later than 120 days prior to the compliance dates specified in paragraphs (f) (1) through (5) of this section, except as provided in paragraph (f)(6)(ii) of this section. The dates specified in § 63.6(i) for submittal of requests for extensions shall not apply to sources subject to this subpart.

(ii) An owner or operator may submit a compliance extension request after the date specified in paragraph (f)(6)(i) of this section provided the need for the compliance extension arose after that date and before the otherwise applicable compliance date, and the need arose due to circumstances beyond reasonable control of the owner or operator. This request shall include the data described in § 63.6(i)(6)(i) (A), (B), (C), and (D).

(g) *Applicability of this subpart except during periods of startup, shutdown, and malfunction.* (1) Each provision set forth in this subpart shall apply at all times except that emission limitations shall not apply during periods of: startup; shutdown; and malfunction, if the startup, shutdown, and malfunction precludes the ability of a particular emission point of an affected source to comply with one or more specific emission limitations to which it is subject and the owner or operator follows the provisions for periods of startup, shutdown, and malfunction, as specified in §§ 63.1259(a)(3) and 63.1260(i). Startup, shutdown, and malfunction are defined in § 63.1251.

(2) The provisions set forth in § 63.1255 of this subpart shall apply at all times except during periods of nonoperation of the PMPU (or specific portion thereof) in which the lines are drained and depressurized resulting in the cessation of the emissions to which § 63.1255 of this subpart applies.

(3) The owner or operator shall not shut down items of equipment that are required or utilized for compliance with the emissions limitations of this subpart during times when emissions (or, where applicable, wastewater streams or residuals) are being routed to such items of equipment, if the shutdown would contravene emissions limitations of this subpart applicable to such items of equipment. This paragraph does not apply if the item of equipment is malfunctioning, or if the owner or operator must shut down the equipment to avoid damage due to a malfunction of the PMPU or portion thereof.

(4) During startups, shutdowns, and malfunctions when the emissions limitations of this subpart do not apply pursuant to paragraphs (g)(1) through

(3) of this section, the owner or operator shall implement, to the extent reasonably available, measures to prevent or minimize excess emissions to the extent practical. For purposes of this paragraph, ''excess emissions'' means emissions in excess of those that would have occurred if there were no startup, shutdown, or malfunction and the owner or operator complied with the relevant provisions of this subpart. The measures to be taken shall be identified in the applicable startup, shutdown, and malfunction plan, and may include, but are not limited to, air pollution control technologies, work practices, pollution prevention, monitoring, and/or changes in the manner of operation of the source. Back-up control devices are not required, but may be used if available.

(h) *Consistency with other regulations.*—(1) *Compliance with other MACT standards.* (i) After the compliance dates specified in this section, an affected source subject to the provisions of this subpart that is also subject to the provisions of any other subpart of this part 63 may elect to comply with either the provisions of this subpart or the provisions of another applicable subpart governing the maintenance of records and reporting to EPA. The affected source shall identify in the Notification of Compliance Status report required by § 63.1260(f) under which authority such records will be maintained.

(ii) After the compliance dates specified in paragraph (f) of this section, at an offsite reloading or cleaning facility subject to § 63.1253(f), compliance with the emission standards and associated initial compliance, monitoring, recordkeeping, and reporting provisions of any other subpart of this part 63 constitutes compliance with the provisions of § 63.1253(f)(7) (ii) or (iii). The owner or operator of the affected storage tank shall identify in the Notification of Compliance Status report required by § 63.1260(f) the subpart of this part 63 with which the owner or operator of the offsite reloading or cleaning facility complies.

(2) *Consistency with 40 CFR parts 264 and 265, subparts AA, BB, and/or CC.* (i) After the compliance dates specified in this section, if any control device subject to this subpart is also subject to monitoring, recordkeeping, and reporting requirements in 40 CFR part 264, subpart AA, BB, or CC, or is subject to monitoring and recordkeeping requirements in 40 CFR part 265, subpart AA, BB, or CC, and the owner or operator complies with the periodic reporting requirements under 40 CFR part 264, subpart AA, BB, or CC that would apply to the device if the facility had final-permitted status, the owner or operator may elect to comply either with the monitoring, recordkeeping, and reporting requirements of this subpart, or with the monitoring, recordkeeping, and reporting requirements in 40 CFR parts 264 and/or 265, as described in this paragraph, which shall constitute compliance with the monitoring, recordkeeping, and reporting requirements of this subpart. If the owner or operator elects to comply with the monitoring, recordkeeping, and reporting requirements in 40 CFR parts 264 and/or 265, the owner or operator shall report all information required by § 63.1260(g) and (i). The owner or operator shall identify in the Notification of Compliance Status, required by § 63.1260(f), the monitoring, recordkeeping, and reporting authority under which the owner or operator will comply.

(ii) After the compliance dates specified in this section, if any equipment at an affected source that is subject to § 63.1255, is also subject to 40 CFR part 264, subpart BB, or to 40 CFR part 265, subpart BB, then compliance with the recordkeeping and reporting requirements of 40 CFR parts 264 and/or 265 may be used to comply with the recordkeeping and reporting requirements of § 63.1255, to the extent that the requirements of 40 CFR parts 264 and/or 265 duplicate the requirements of § 63.1255. The owner or operator shall identify in the Notification of Compliance Status, required by § 63.1260(f), if the owner or operator will comply with the recordkeeping and reporting authority under 40 CFR parts 264 and/or 265.

(3) *Compliance with 40 CFR 60.112(b).* After the compliance dates specified in this section, a storage tank controlled with a floating roof and in compliance with the provisions of 40 CFR 60.112b, subpart Kb, constitutes compliance

with the provisions of this subpart GGG. A storage tank with a fixed roof, closed vent system, and control device in compliance with the provisions of 40 CFR 60.112b, subpart Kb must comply with the monitoring, recordkeeping, and reporting provisions of this subpart GGG. The owner or operator shall identify in the Notification of Compliance Status report required by §63.1260(f) which tanks are in compliance with subpart Kb.

(4) *Compliance with subpart I of this part.* After the compliance dates specified in this section, an affected source with equipment subject to subpart I of this part may elect to comply with either the provisions of §63.1255 or the provisions of subpart H of this part for all such equipment. The owner or operator shall identify in the Notification of Compliance Status report required by §63.1260(f) the provisions with which the owner elects to comply.

(5) *Compliance with other regulations for wastewater.* After the compliance dates specified in this section, the owner or operator of an affected wastewater stream that is also subject to provisions in 40 CFR parts 260 through 272 may elect to determine whether this subpart or 40 CFR parts 260 through 272 contain the more stringent control requirements (*e.g.*, design, operation, and inspection requirements for waste management units; numerical treatment standards; etc.) and the more stringent testing, monitoring, recordkeeping, and reporting. Compliance with provisions of 40 CFR parts 260 through 272 that are determined to be more stringent than the requirements of this subpart constitutes compliance with this subpart. For example, provisions of 40 CFR parts 260 through 272 for treatment units that meet the conditions specified in §63.1256(g)(13) constitute compliance with this subpart. In the Notification of Compliance Status report required by §63.1260(f), the owner or operator shall identify the more stringent provisions of 40 CFR parts 260 through 272 with which the owner or operator will comply. The owner or operator shall also identify in the Notification of Compliance Status report required by §63.1260(f) the information and procedures used to make any stringency determinations. If the owner or operator does not elect to determine the more stringent requirements, the owner or operator must comply with both the provisions of 40 CFR parts 260 through 272 and the provisions of this subpart.

(6) *Compliance with subpart PPP of this part.* After the compliance dates specified in this section, an affected source with equipment in a pharmaceutical manufacturing process unit that is also part of an affected source under subpart PPP of this part may elect to demonstrate compliance with §63.1254 by controlling all process vents in accordance with §63.1425 (b), (c)(1), (c)(3), (d), and/or (f). Alternatively, the owner or operator may elect to determine which process vents must be controlled to comply with the percent reduction requirements of §63.1254 and control only those vents in accordance with §63.1425 (b), (c)(1), (c)(3), (d), and/or (f). For any pharmaceutical manufacturing process unit controlled in accordance with the requirements of §63.1425, the owner or operator must also comply with all other requirements in subpart PPP of this part. In the Notification of Compliance Status report required by §63.1260(f), the owner or operator shall identify which pharmaceutical manufacturing process units are meeting the control requirements for process vents and all other requirements of subpart PPP of this part, and the owner or operator shall describe the calculations and other information used to identify which process vents must be controlled to comply with the percent reduction requirements of §63.1254, if applicable.

(i) For the purposes of establishing whether a person is in violation of this subpart, nothing in this subpart shall preclude the use of any credible evidence or information relevant to whether a source would have been in compliance with applicable requirements.

[63 FR 50326, Sept. 21, 1998, as amended at 65 FR 52596, Aug. 29, 2000; 66 FR 40131, Aug. 2, 2001]

§63.1251 Definitions.

Terms used in this subpart are defined in the Act, in subpart A of this part, or in this section. If the same term is defined in subpart A of this part and in this section, it shall have

the meaning given in this section for the purposes of this subpart.

Active ingredient means any material that is intended to furnish pharmacological activity or other direct effect in the diagnosis, cure, mitigation, treatment, or prevention of disease, or to affect the structure or any function of the body of man or other animals. This term does not include food, food additives (except vitamins and other materials described by SIC code 2833 or 2834), color additives, cosmetics, in-vitro diagnostic substances, x-ray film, test indicator devices, and medical devices such as implants, artificial joints, surgical bandages, and stitching material.

Actual HAP emissions means the HAP emitted to the atmosphere from either uncontrolled or controlled emission points.

Air pollution control device or Control device means equipment installed on a process vent, storage tank, wastewater treatment exhaust stack, or combination thereof that reduces the mass of HAP emitted to the air. The equipment may consist of an individual device or a series of devices. Examples include, but are not limited to, incinerators, carbon adsorption units, condensers, flares, boilers, process heaters, and gas absorbers. Process condensers are not considered air pollution control devices or control devices.

Annual average concentration, as used in the wastewater provisions in § 63.1256, means the total mass of partially soluble and/or soluble HAP compounds in a wastewater stream during the calendar year divided by the total mass of the wastewater stream discharged during the same calendar year, as determined according to the procedures specified in § 63.1257(e)(1) (i) and (ii).

Automated monitoring and recording system means any means of measuring values of monitored parameters and creating a hard copy or computer record of the measured values that does not require manual reading of monitoring instruments and manual transcription of data values. Automated monitoring and recording systems include, but are not limited to, computerized systems and strip charts.

Batch emission episode means a discrete venting episode that may be associated with a single unit operation. A unit operation may have more than one batch emission episode. For example, a displacement of vapor resulting from the charging of a vessel with HAP will result in a discrete emission episode that will last through the duration of the charge and will have an average flowrate equal to the rate of the charge. If the vessel is then heated, there will also be another discrete emission episode resulting from the expulsion of expanded vapor. Both emission episodes may occur in the same vessel or unit operation. There are possibly other emission episodes that may occur from the vessel or other process equipment, depending on process operations.

Batch operation or Batch process means a noncontinuous operation involving intermittent or discontinuous feed into equipment, and, in general, involves the emptying of the equipment after the batch operation ceases and prior to beginning a new operation. Addition of raw material and withdrawal of product do not occur simultaneously in a batch operation.

Bench-scale batch process means a batch process (other than a research and development facility) that is capable of being located on a laboratory bench top. This bench-scale equipment will typically include reagent feed vessels, a small reactor and associated product separator, recovery and holding equipment. These processes are only capable of producing small quantities of product.

Block means a time period that comprises a single batch.

Boiler means any enclosed combustion device that extracts useful energy in the form of steam and is not an incinerator. Boiler also means any industrial furnace as defined in 40 CFR 260.10.

Centralized combustion control device (CCCD) means enclosed combustion devices that are used to control process vent emissions from non-dedicated PMPU's at a facility. Centralized combustion control devices may also be used to control emissions from source types including, but not limited to,

storage tanks, waste management units, and equipment leaks.

Cleaning operation means routine rinsing, washing, or boil-off of equipment in batch operations between batches.

Closed biological treatment process means a tank or surface impoundment where biological treatment occurs and air emissions from the treatment process are routed to either a control device by means of a closed-vent system or by means of hard-piping. The tank or surface impoundment has a fixed roof, as defined in this section, or a floating flexible membrane cover that meets the requirements specified in §63.1256(c).

Closed-loop system means an enclosed system that returns process fluid to the process and is not vented to the atmosphere except through a closed-vent system.

Closed-purge system means a system or combination of system and portable containers, to capture purged liquids. Containers must be covered or closed when not being filled or emptied.

Closed-vent system means a system that is not open to the atmosphere and is composed of piping, ductwork, connections, and, if necessary, flow inducing devices that transport gas or vapor from an emission point to a control device.

Combustion device means an individual unit of equipment, such as a flare, incinerator, process heater, or boiler, used for the combustion of HAP vapors.

Combustion device burner means a device designed to mix and ignite fuel and air to provide a flame to heat and oxidize waste organic vapors in a combustion device.

Connector means flanged, screwed, or other joined fittings used to connect two pipe lines or a pipe line and a piece of equipment. A common connector is a flange. Joined fittings welded completely around the circumference of the interface are not considered connectors for the purpose of this regulation. For the purpose of reporting and recordkeeping, connector means joined fittings that are not inaccessible, ceramic, or ceramic-lined as described in §63.1255(b)(1)(vii) and §63.1255(f)(3).

Construction means the onsite fabrication, erection, or installation of an affected source or a PMPU. Addition of new equipment to a PMPU subject to existing source standards does not constitute construction, but it may constitute reconstruction of the affected source or PMPU if it satisfies the definition of reconstruction in this section.

Consumption means the quantity of all HAP raw materials entering a process in excess of the theoretical amount used as reactant, assuming 100 percent stoichiometric conversion. The raw materials include reactants, solvents, and any other additives. If a HAP is generated in the process as well as added as a raw material, consumption includes the quantity generated in the process.

Container, as used in the wastewater provisions, means any portable waste management unit that has a capacity greater than or equal to 0.1 m^3 in which a material is stored, transported, treated, or otherwise handled. Examples of containers are drums, barrels, tank trucks, barges, dumpsters, tank cars, dump trucks, and ships.

Continuous process means a process where the inputs and outputs flow continuously throughout the duration of the process. Continuous processes are typically steady state.

Continuous recorder means a data recording device that either records an instantaneous data value at least once every 15 minutes or records 15-minute or more frequent block average values.

Continuous seal means a seal that forms a continuous closure that completely covers the space between the wall of the storage tank and the edge of the floating roof. A continuous seal may be a vapor-mounted, liquid-mounted, or metallic shoe seal.

Control device, for purposes of this §63.1255, means any equipment used for recovering or oxidizing organic hazardous air pollutant vapors. Such equipment includes, but is not limited to, absorbers, carbon adsorbers, condensers, flares, boilers, and process heaters.

Controlled HAP emissions means the quantity of HAP discharged to the atmosphere from an air pollution control device.

Cover, as used in the wastewater provisions, means a device or system which is placed on or over a waste management unit containing wastewater or residuals so that the entire surface area is enclosed to minimize air emissions. A cover may have openings necessary for operation, inspection, and maintenance of the waste management unit such as access hatches, sampling ports, and gauge wells provided that each opening is closed when not in use. Examples of covers include a fixed roof installed on a wastewater tank, a lid installed on a container, and an air-supported enclosure installed over a waste management unit.

Dedicated PMPU means a PMPU that is composed of equipment that is used to manufacture the same product for a continuous period of 6 months or greater. The PMPU includes any shared storage tank(s) that are determined to belong to the PMPU according to the procedures in § 63.1250(e).

Dense gas system means a conveyance system operated to limit oxygen levels below 12 percent.

Double block and bleed system means two block valves connected in series with a bleed valve or line that can vent the line between the two block valves.

Duct work means a conveyance system such as those commonly used for heating and ventilation systems. It is often made of sheet metal and often has sections connected by screws or crimping. Hard-piping is not ductwork.

Enhanced biological treatment system or enhanced biological treatment process means an aerated, thoroughly mixed treatment unit(s) that contains biomass suspended in water followed by a clarifier that removes biomass from the treated water and recycles recovered biomass to the aeration unit. The mixed liquor volatile suspended solids (biomass) is greater than 1 kilogram per cubic meter throughout each aeration unit. The biomass is suspended and aerated in the water of the aeration unit(s) by either submerged air flow or mechanical agitation. A thoroughly mixed treatment unit is a unit that is designed and operated to approach or achieve uniform biomass distribution and organic compound concentration throughout the aeration unit by quickly dispersing the recycled biomass and the wastewater entering the unit.

Equipment, for purposes of § 63.1255, means each pump, compressor, agitator, pressure relief device, sampling connection system, open-ended valve or line, valve, connector, and instrumentation system in organic hazardous air pollutant service; and any control devices or closed-vent systems required by this subpart.

Excipient means any substance other than the active drug or product which has been appropriately evaluated for safety and is included in a drug delivery system to either aid the processing of the drug delivery system during its manufacture; protect, support, or enhance stability, bioavailablity, or patient acceptability; assist in product identification; or enhance any other attribute of the overall safety and effectiveness of the drug delivery system during storage or use.

External floating roof means a pontoon-type or double-deck type cover that rests on the liquid surface in a storage tank or waste management unit with no fixed roof.

Fill or filling means the introduction of material into a storage tank or the introduction of a wastewater stream or residual into a waste management unit, but not necessarily to complete capacity.

First attempt at repair means to take action for the purpose of stopping or reducing leakage of organic material to the atmosphere.

Fixed roof means a cover that is mounted on a waste management unit or storage tank in a stationary manner and that does not move with fluctuations in liquid level.

Floating roof means a cover consisting of a double deck, pontoon single deck, internal floating cover or covered floating roof, which rests upon and is supported by the liquid being contained, and is equipped with a closure seal or seals to close the space between the roof edge and waste management unit or storage tank wall.

Flow indicator means a device which indicates whether gas flow is, or whether the valve position would allow gas flow to be, present in a line.

Formulation means the process of mixing, blending, or diluting one or more active or inert ingredients with one or more active or inert ingredients, without an intended chemical reaction, to obtain a pharmaceutical dosage form. Formulation operations include mixing, compounding, blending, and tablet coating.

Group of processes means all of the equipment associated with processes in a building, processing area, or facility-wide. For a dedicated process, a group of processes may consist of a single process.

Halogen atoms mean atoms of chlorine or fluorine.

Halogenated compounds means organic HAP compounds that contain halogen atoms.

Halogenated vent stream or Halogenated stream means a process, storage tank, or waste management unit vent determined to have a concentration of halogenated compounds of greater than 20 ppmv, as determined through process knowledge, test results using Method 18 of 40 CFR part 60, appendix A, or test results using any other test method that has been validated according to the procedures in Method 301 of appendix A of this part.

Hard-piping means piping or tubing that is manufactured and properly installed using good engineering judgment and standards, such as ANSI B31–3.

Hydrogen halides and halogens means hydrogen chloride (HCl), chlorine (Cl^2), and hydrogen fluoride (HF).

In gas/vapor service means that a piece of equipment in organic hazardous air pollutant service contains a gas or vapor at operating conditions.

In heavy liquid service means that a piece of equipment in organic hazardous air pollutant service is not in gas/vapor service or in light liquid service.

In light liquid service means that a piece of equipment in organic hazardous air pollutant service contains a liquid that meets the following conditions:

(1) The vapor pressure of one or more of the organic compounds is greater than 0.3 kilopascals at 20 °C;

(2) The total concentration of the pure organic compounds constituents having a vapor pressure greater than 0.3 kilopascals at 20 °C is equal to or greater than 20 percent by weight of the total process stream; and

(3) The fluid is a liquid at operating conditions. (Note: Vapor pressures may be determined by the methods described in 40 CFR 60.485(e)(1).)

In liquid service means that a piece of equipment in organic hazardous air pollutant service is not in gas/vapor service.

In organic hazardous air pollutant or in organic HAP service means that a piece of equipment either contains or contacts a fluid (liquid or gas) that is at least 5 percent by weight of total organic HAP's as determined according to the provisions of §63.180(d). The provisions of §63.180(d) also specify how to determine that a piece of equipment is not in organic HAP service.

In vacuum service means that equipment is operating at an internal pressure which is at least 5 kilopascals below ambient pressure.

In-situ sampling systems means non-extractive samplers or in-line samplers.

Individual drain system means the stationary system used to convey wastewater streams or residuals to a waste management unit. The term includes hard piping; all process drains and junction boxes; and associated sewer lines, other junction boxes, manholes, sumps, and lift stations conveying wastewater streams or residuals. A segregated stormwater sewer system, which is a drain and collection system designed and operated for the sole purpose of collecting rainfall-runoff at a facility, and which is segregated from all other individual drain systems, is excluded from this definition.

Initial startup means the first time a new or reconstructed source begins production. Initial startup does not include operation solely for testing equipment. Initial startup does not include subsequent start ups (as defined in this section) of processes following malfunctions or process shutdowns.

Internal floating roof means a cover that rests or floats on the liquid surface (but not necessarily in complete contact with it) inside a storage tank or waste management unit that has a permanently affixed roof.

Instrumentation system means a group of equipment components used to condition and convey a sample of the process fluid to analyzers and instruments for the purpose of determining process operating conditions (e.g., composition, pressure, flow, etc.). Valves and connectors are the predominant type of equipment used in instrumentation systems; however, other types of equipment may also be included in these systems. Only valves nominally 0.5 inches and smaller, and connectors nominally 0.75 inches and smaller in diameter are considered instrumentation systems for the purposes of this subpart. Valves greater than nominally 0.5 inches and connectors greater than nominally 0.75 inches associated with instrumentation systems are not considered part of instrumentation systems and must be monitored individually.

Isolated intermediate means a product of a process. An isolated intermediate is usually a product of a chemical synthesis, fermentation, or biological extraction process; several different isolated intermediates may be produced in the manufacture of a finished dosage form of a drug. Precursors, active ingredients, or finished dosage forms are considered isolated intermediates. An isolated intermediate is stored before subsequent processing. Storage occurs at any time the intermediate is placed in equipment used solely for storage, such as drums, totes, day tanks, and storage tanks. The storage of an isolated intermediate marks the end of a process.

Junction box means a manhole or access point to a wastewater sewer system line or a lift station.

Large control device means a control device that controls total HAP emissions of greater than or equal to 10 tons/yr, before control.

Liquid-mounted seal means a foam- or liquid-filled seal mounted in contact with the liquid between the wall of the storage tank or waste management unit and the floating roof. The seal is mounted continuously around the tank or unit.

Liquids dripping means any visible leakage from the seal including dripping, spraying, misting, clouding, and ice formation. Indications of liquid dripping include puddling or new stains that are indicative of an existing evaporated drip.

Maintenance wastewater means wastewater generated by the draining of process fluid from components in the pharmaceutical manufacturing process unit into an individual drain system in preparation for or during maintenance activities. Maintenance wastewater can be generated during planned and unplanned shutdowns and during periods not associated with a shutdown. Examples of activities that can generate maintenance wastewater include descaling of heat exchanger tubing bundles, cleaning of distillation column traps, draining of pumps into an individual drain system, and draining of portions of the pharmaceutical manufacturing process unit for repair. Wastewater from cleaning operations is not considered maintenance wastewater.

Malfunction means any sudden, infrequent, and not reasonably preventable failure of air pollution control equipment, emissions monitoring equipment, process equipment, or a process to operate in a normal or usual manner. Failures that are caused all or in part by poor maintenance or careless operation are not malfunctions.

Maximum true vapor pressure means the equilibrium partial pressure exerted by the total organic HAP in the stored or transferred liquid at the temperature equal to the highest calendar-month average of the liquid storage or transferred temperature for liquids stored or transferred above or below the ambient temperature or at the local maximum monthly average temperature as reported by the National Weather Service for liquids stored or transferred at the ambient temperature, as determined:

(1) In accordance with methods described in Chapter 19.2 of the American Petroleum Institute's Manual of Petroleum Measurement Standards, Evaporative Loss From Floating-Roof Tanks (incorporated by reference as specified in § 63.14); or

(2) As obtained from standard reference texts; or

(3) As determined by the American Society for Testing and Materials Method D2879–97, Test Method for

Vapor Pressure-Temperature Relationship and Initial Decomposition Temperature of Liquids by Isoteniscope (incorporated by reference as specified in §63.14); or

(4) Any other method approved by the Administrator.

Metallic shoe seal or mechanical shoe seal means metal sheets that are held vertically against the wall of the storage tank by springs, weighted levers, or other mechanisms and connected to the floating roof by braces or other means. A flexible coated fabric (envelope) spans the annular space between the metal sheet and the floating roof.

Nondedicated formulation operations means equipment used to formulate numerous products.

Nondedicated recovery device(s) means a recovery device that receives material from more than one PMPU.

Nonrepairable means that it is technically infeasible to repair a piece of equipment from which a leak has been detected without a process shutdown.

Open biological treatment process means a biological treatment process that is not a closed biological treatment process as defined in this section.

Open-ended valve or line means any valve, except pressure relief valves, having one side of the valve seat in contact with process fluid and one side open to atmosphere, either directly or through open piping.

Operating scenario for the purposes of reporting and recordkeeping, means any specific operation of a PMPU and includes for each process:

(1) A description of the process and the type of process equipment used;

(2) An identification of related process vents and their associated emissions episodes and durations, wastewater PODs, and storage tanks;

(3) The applicable control requirements of this subpart, including the level of required control, and for vents, the level of control for each vent;

(4) The control or treatment devices used, as applicable, including a description of operating and/or testing conditions for any associated control device;

(5) The process vents, wastewater PODs, and storage tanks (including those from other processes) that are simultaneously routed to the control or treatment device(s);

(6) The applicable monitoring requirements of this subpart and any parametric level that assures compliance for all emissions routed to the control or treatment device;

(7) Calculations and engineering analyses required to demonstrate compliance; and

(8) For reporting purposes, a change to any of these elements not previously reported, except for paragraph (5) of this definition, shall constitute a new operating scenario.

Partially soluble HAP means a HAP listed in Table 2 of this subpart.

Pharmaceutical manufacturing operations means the facilitywide collection of PMPU and any other equipment such as heat exchanger systems, wastewater and waste management units, or cooling towers that are not associated with an individual PMPU, but that are located at a facility for the purpose of manufacturing pharmaceutical products and are under common control.

Pharmaceutical manufacturing process unit (PMPU) means the process, as defined in this subpart, and any associated storage tanks, equipment identified in §63.1252(f), and components such as pumps, compressors, agitators, pressure relief devices, sampling connection systems, open-ended valves or lines, valves, connectors, and instrumentation systems that are used in the manufacturing of a pharmaceutical product.

Pharmaceutical product means any of the following materials, excluding any material that is a nonreactive solvent, excipient, binder, or filler, or any material that is produced in a chemical manufacturing process unit that is subject to the requirements of subparts F and G of this part 63:

(1) Any material described by the standard industrial classification (SIC) code 2833 or 2834; or

(2) Any material whose manufacturing process is described by North American Industrial Classification System (NAICS) code 325411 or 325412; or

(3) A finished dosage form of a drug, for example, a tablet, capsule, solution, etc.; or

(4) Any active ingredient or precursor that is produced at a facility whose primary manufacturing operations are described by SIC code 2833 or 2834; or

(5) At a facility whose primary operations are not described by SIC code 2833 or 2834, any material whose primary use is as an active ingredient or precursor.

Plant site means all contiguous or adjoining property that is under common control, including properties that are separated only by a road or other public right-of-way. Common control includes properties that are owned, leased, or operated by the same entity, parent entity, subsidiary, or any combination thereof.

Point of determination (POD) means the point where a wastewater stream exits the process, storage tank, or last recovery device. If soluble and/or partially soluble HAP compounds are not recovered from water before discharge, the discharge point from the process equipment or storage tank is a POD. If water streams are routed to a recovery device, the discharge from the recovery device is a POD. There can be more than 1 POD per process or PMPU.

Precursor means a material that is manufactured to undergo further chemical change or processing to ultimately manufacture an active ingredient or finished dosage form of a drug. This term does not include commodity chemicals produced by the synthetic organic chemical manufacturing industry.

Pressure release means the emission of materials resulting from the system pressure being greater than the set pressure of the pressure relief device. This release can be one release or a series of releases over a short time period due to a malfunction in the process.

Pressure relief device or valve means a safety device used to prevent operating pressures from exceeding the maximum allowable working pressure of the process equipment. A common pressure relief device is a spring-loaded pressure relief valve. Devices that are actuated either by a pressure of less than or equal to 2.5 psig or by a vacuum are not pressure relief devices.

Primary use means 50 percent or more of a material is used for a particular purpose.

Process means all equipment which collectively function to produce a pharmaceutical product or isolated intermediate (which is also a pharmaceutical product). A process may consist of one or more unit operations. For the purposes of this subpart, process includes any, all, or a combination of reaction, recovery, separation, purification, or other activity, operation, manufacture, or treatment which are used to produce a pharmaceutical product or isolated intermediate. Cleaning operations conducted are considered part of the process. Nondedicated solvent recovery operations located within a contiguous area within the affected source are considered single processes. A storage tank that is used to accumulate used solvent from multiple batches of a single process for purposes of solvent recovery does not represent the end of the process. Nondedicated formulation operations occurring within a contiguous area are considered a single process that is used to formulate numerous materials and/or products. Quality assurance and quality control laboratories are not considered part of any process. Ancillary activities are not considered a process or part of any process. Ancillary activities include boilers and incinerators (not used to comply with the provisions of § 63.1253, § 63.1254, or § 63.1256(h)), chillers and refrigeration systems, and other equipment and activities that are not directly involved (*i.e.,* they operate within a closed system and materials are not combined with process fluids) in the processing of raw materials or the manufacturing of a pharmaceutical product.

Process condenser means a condenser whose primary purpose is to recover material as an integral part of a process. The condenser must support a vapor-to-liquid phase change for periods of source equipment operation that are at or above the boiling or bubble point of substance(s) at the liquid surface. Examples of process condensers include distillation condensers, reflux condensers, and condensers used in stripping or flashing operations. In a series of condensers, all condensers up to and including the first condenser with an exit gas temperature below the

boiling or bubble point of the substance(s) at the liquid surface are considered to be process condensers. All condensers in line prior to a vacuum source are included in this definition.

Process shutdown means a work practice or operational procedure that stops production from a process or part of a process during which it is technically feasible to clear process material from a process or part of a process consistent with safety constraints and during which repairs can be effected. An unscheduled work practice or operational procedure that stops production from a process or part of a process for less than 24 hours is not a process shutdown. An unscheduled work practice or operational procedure that would stop production from a process or part of a process for a shorter period of time than would be required to clear the process or part of the process of materials and start up the process, and would result in greater emissions than delay of repair of leaking components until the next scheduled process shutdown, is not a process shutdown. The use of spare equipment and technically feasible bypassing of equipment without stopping production are not process shutdowns.

Process tank means a tank that is used to collect material discharged from a feedstock storage tank or unit operation and to transfer this material to another unit operation within the process or to a product storage tank. Surge control vessels and bottoms receivers that fit these conditions are considered process tanks. Product storage tanks are considered process tanks and are part of the PMPU that produce the stored material. For the purposes of this subpart, vents from process tanks are considered process vents.

Process vent means a vent from a unit operation or vents from multiple unit operations within a process that are manifolded together into a common header, through which a HAP-containing gas stream is, or has the potential to be, released to the atmosphere. Examples of process vents include, but are not limited to, vents on condensers used for product recovery, bottom receivers, surge control vessels, reactors, filters, centrifuges, and process tanks. Emission streams that are undiluted and uncontrolled containing less than 50 ppmv HAP, as determined through process knowledge that no HAP are present in the emission stream or using an engineering assessment as discussed in §63.1257(d)(2)(ii), test data using Methods 18 of 40 CFR part 60, appendix A, or any other test method that has been validated according to the procedures in Method 301 of appendix A of this part, are not considered process vents. Process vents do not include vents on storage tanks regulated under §63.1253, vents on wastewater emission sources regulated under §63.1256, or pieces of equipment regulated under §63.1255.

Production-indexed HAP consumption factor is the result of dividing the annual consumption of total HAP by the annual production rate, per process.

Production-indexed volatile organic compound (VOC) consumption factor is the result of dividing the annual consumption of total VOC by the annual production rate, per process.

Publicly owned treatment works (POTW) means any devices and systems used in the storage, treatment, recycling, and reclamation of municipal sewage or industrial wastes of a liquid nature as defined in section 212(2)(A) of the Clean Water Act, as amended [33 U.S.C. §1292(2)(A)]. A POTW includes the treatment works, intercepting sewers, outfall sewers, sewage collection systems, pumping, power, and other equipment. The POTW is defined at 40 CFR 403.3(o).

Reactor means a device or vessel in which one or more chemicals or reactants, other than air, are combined or decomposed in such a way that their molecular structures are altered and one or more new organic compounds are formed.

Reconstruction, as used in §63.1250(b), shall have the meaning given in §63.2, except that ''affected or previously unaffected stationary source'' shall mean either ''affected facility'' or ''PMPU.'' As used in §63.1254(a)(3)(ii)(A)(*3*), reconstruction shall have the meaning given in §63.2, except that ''source'' shall mean ''control device.''

Recovery device, as used in the wastewater provisions, means an individual unit of equipment used for the purpose of recovering chemicals for fuel value

(i.e., net positive heating value), use, reuse, or for sale for fuel value, use or reuse. Examples of equipment that may be recovery devices include organic removal devices such as decanters, strippers, or thin-film evaporation units. To be a recovery device, a decanter and any other equipment based on the operating principle of gravity separation must receive only two-phase liquid streams.

Repaired means that equipment:

(1) Is adjusted, or otherwise altered, to eliminate a leak as defined in the applicable paragraphs of § 63.1255, and;

(2) Is, unless otherwise specified in applicable provisions of § 63.1255, monitored as specified in § 63.180(b) and (c) as appropriate, to verify that emissions from the equipment are below the applicable leak definition.

Research and development facility means any stationary source whose primary purpose is to conduct research and development into new processes and products, where such source is operated under the close supervision of technically trained personnel, and is not engaged in the manufacture of products for commercial sale in commerce, except in a de minimis manner.

Residual means any HAP-containing liquid or solid material that is removed from a wastewater stream by a waste management unit or treatment process that does not destroy organics (nondestructive unit). Examples of residuals from nondestructive waste management units are: the organic layer and bottom residue removed by a decanter or organic-water separator and the overheads from a steam stripper or air stripper. Examples of materials which are not residuals are: silt; mud; leaves; bottoms from a steam stripper or air stripper; and sludges, ash, or other materials removed from wastewater being treated by destructive devices such as biological treatment units and incinerators.

Safety device means a closure device such as a pressure relief valve, frangible disc, fusible plug, or any other type of device which functions exclusively to prevent physical damage or permanent deformation to a unit or its air emission control equipment by venting gases or vapors directly to the atmosphere during unsafe conditions resulting from an unplanned, accidental, or emergency event. For the purposes of this subpart, a safety device is not used for routine venting of gases or vapors from the vapor headspace underneath a cover such as during filling of the unit or to adjust the pressure in this vapor headspace in response to normal daily diurnal ambient temperature fluctuations. A safety device is designed to remain in a closed position during normal operations and open only when the internal pressure, or another relevant parameter, exceeds the device threshold setting applicable to the air emission control equipment as determined by the owner or operator based on manufacturer recommendations, applicable regulations, fire protection and prevention codes, standard engineering codes and practices, or other requirements for the safe handling of flammable, combustible, explosive, reactive, or hazardous materials.

Sampling connection system means an assembly of equipment within a process unit used during periods of representative operation to take samples of the process fluid. Equipment used to take nonroutine grab samples is not considered a sampling connection system.

Sensor means a device that measures a physical quantity or the change in a physical quantity, such as temperature, pressure, flow rate, pH, or liquid level.

Set pressure means the pressure at which a properly operating pressure relief device begins to open to relieve atypical process system operating pressure.

Sewer line means a lateral, trunk line, branch line, or other conduit including, but not limited to, grates, trenches, etc., used to convey wastewater streams or residuals to a downstream waste management unit.

Shutdown means the cessation of operation of a continuous process for any purpose. Shutdown also means the cessation of a batch process or any related individual piece of equipment required or used to comply with this subpart as a result of a malfunction or for replacement of equipment, repair, or any other purpose not excluded from this definition. Shutdown also applies to

emptying and degassing storage vessels. Shutdown does not apply to cessation of a batch process at the end of a campaign, for routine maintenance, for rinsing or washing of equipment between batches, or other routine operations.

Single-seal system means a floating roof having one continuous seal that completely covers the space between the wall of the storage tank and the edge of the floating roof. This seal may be a vapor-mounted, liquid-mounted, or metallic shoe seal.

Small control device means a control device that controls total HAP emissions of less than 10 tons/yr, before control.

Soluble HAP means a HAP listed in Table 3 of this subpart.

Standard batch means a batch process operated within a range of operating conditions that are documented in an operating scenario. Emissions from a standard batch are based on the operating conditions that result in highest emissions. The standard batch defines the uncontrolled and controlled emissions for each emission episode defined under the operating scenario.

Startup means the setting in operation of a continuous process unit for any purpose; the first time a new or reconstructed batch process unit begins production; for new equipment added, including equipment used to comply with this subpart, the first time the equipment is put into operation; or, for the introduction of a new product/process, the first time the product or process is run in equipment. For batch process units, startup does not apply to the first time the equipment is put into operation at the start of a campaign to produce a product that has been produced in the past, after a shutdown for maintenance, or when the equipment is put into operation as part of a batch within a campaign. As used in §63.1255, startup means the setting in operation of a piece of equipment or a control device that is subject to this subpart.

Storage tank means a tank or other vessel that is used to store organic liquids that contain one or more HAP as raw material feedstocks. Storage tank also means a tank or other vessel in a tank farm that receives and accumulates used solvent from multiple batches of a process or processes for purposes of solvent recovery. The following are not considered storage tanks for the purposes of this subpart:

(1) Vessels permanently attached to motor vehicles such as trucks, railcars, barges, or ships;

(2) Pressure vessels designed to operate in excess of 204.9 kilopascals and without emissions to the atmosphere;

(3) Vessels storing organic liquids that contain HAP only as impurities;

(4) Wastewater storage tanks; and

(5) Process tanks (including product tanks and isolated intermediate tanks).

Supplemental gases are any gaseous streams that are not defined as process vents, or closed-vent systems from wastewater management and treatment units, storage tanks, or equipment components and that contain less than 50 ppmv TOC, as determined through process knowledge, that are introduced into vent streams or manifolds. Air required to operate combustion device burner(s) is not considered supplemental gas.

Surface impoundment means a waste management unit which is a natural topographic depression, manmade excavation, or diked area formed primarily of earthen materials (although it may be lined with manmade materials), which is designed to hold an accumulation of liquid wastes or waste containing free liquids. A surface impoundment is used for the purpose of treating, storing, or disposing of wastewater or residuals, and is not an injection well. Examples of surface impoundments are equalization, settling, and aeration pits, ponds, and lagoons.

System flowrate means the flowrate of gas entering the control device.

Total organic compounds (TOC) means those compounds measured according to the procedures of Method 18 or Method 25A, 40 CFR part 60, appendix A.

Treatment process means a specific technique that removes or destroys the organics in a wastewater or residual stream such as a steam stripping unit, thin-film evaporation unit, waste incinerator, biological treatment unit, or any other process applied to wastewater streams or residuals to comply with §63.1256. Most treatment processes

are conducted in tanks. Treatment processes are a subset of waste management units.

Uncontrolled HAP emissions means a gas stream containing HAP which has exited the process (or process condenser, if any), but which has not yet been introduced into an air pollution control device to reduce the mass of HAP in the stream. If the process vent is not routed to an air pollution control device, uncontrolled emissions are those HAP emissions released to the atmosphere.

Unit operation means those processing steps that occur within distinct equipment that are used, among other things, to prepare reactants, facilitate reactions, separate and purify products, and recycle materials. Equipment used for these purposes includes but is not limited to reactors, distillation columns, extraction columns, absorbers, decanters, dryers, condensers, and filtration equipment.

Vapor-mounted seal means a continuous seal that completely covers the annular space between the wall of the storage tank or waste management unit and the edge of the floating roof and is mounted such that there is a vapor space between the stored liquid and the bottom of the seal.

Volatile organic compounds (VOC) means those materials defined in 40 CFR 51.100.

Waste management unit means the equipment, structure(s),and or devices used to convey, store, treat, or dispose of wastewater streams or residuals. Examples of waste management units include wastewater tanks, air flotation units, surface impoundments, containers, oil-water or organic-water separators, individual drain systems, biological wastewater treatment units, waste incinerators, and organic removal devices such as steam and air stripper units, and thin film evaporation units. If such equipment is used for recovery then it is part of a pharmaceutical process and is not a waste management unit.

Wastewater means any portion of an individual wastewater stream or any aggregation of wastewater streams.

Wastewater stream means water that is discarded from a PMPU through a single POD, that contains an annual average concentration of partially soluble and/or soluble HAP compounds of at least 5 parts per million by weight and a load of at least 0.05 kg/yr. The following are not considered wastewater streams for the purposes of this subpart:

(1) Stormwater from segregated sewers;

(2) Water from fire-fighting and deluge systems, including testing of such systems;

(3) Spills;

(4) Water from safety showers;

(5) Samples of a size not greater than reasonably necessary for the method of analysis that is used;

(6) Equipment leaks;

(7) Wastewater drips from procedures such as disconnecting hoses after clearing lines; and

(8) Noncontact cooling water.

Wastewater tank means a stationary waste management unit that is designed to contain an accumulation of wastewater or residuals and is constructed primarily of nonearthen materials (e.g., wood, concrete, steel, plastic) which provide structural support. Wastewater tanks used for flow equalization are included in this definition.

Water seal controls means a seal pot, p-leg trap, or other type of trap filled with water (e.g., flooded sewers that maintain water levels adequate to prevent air flow through the system) that creates a water barrier between the sewer line and the atmosphere. The water level of the seal must be maintained in the vertical leg of a drain in order to be considered a water seal.

[63 FR 50326, Sept. 21, 1998, as amended at 65 FR 52598, Aug. 29, 2000; 67 FR 40131, Aug. 2, 2001]

§ 63.1252 Standards: General.

Each owner or operator of any affected source subject to the provisions of this subpart shall control HAP emissions to the level specified in this section on and after the compliance dates specified in § 63.1250(f). Initial compliance with the emission limits is demonstrated in accordance with the provisions of § 63.1257, and continuous compliance is demonstrated in accordance with the provisions of § 63.1258.

(a) *Opening of a safety device.* Opening of a safety device, as defined in

§63.1251, is allowed at any time conditions require it to do so to avoid unsafe conditions.

(b) *Closed-vent systems.* The owner or operator of a closed-vent system that contains bypass lines that could divert a vent stream away from a control device used to comply with the requirements in §§63.1253, 63.1254, and 63.1256 shall comply with the requirements of Table 4 to this subpart and paragraph (b)(1) or (2) of this section. Equipment such as low leg drains, high point bleeds, analyzer vents, open-ended valves or lines, rupture disks and pressure relief valves needed for safety purposes are not subject to this paragraph.

(1) Install, calibrate, maintain, and operate a flow indicator that determines whether vent stream flow is present at least once every 15 minutes. Records shall be maintained as specified in §63.1259(i)(6)(i). The flow indicator shall be installed at the entrance to any bypass line that could divert the vent stream away from the control device to the atmosphere; or

(2) Secure the bypass line valve in the closed position with a car seal or lock and key type configuration. A visual inspection of the seal or closure mechanism shall be performed at least once every month to ensure that the valve is maintained in the closed position and the vent stream is not diverted through the bypass line. Records shall be maintained as specified in §63.1259(i)(6)(ii).

(c) *Heat exchange systems.* Except as provided in paragraph (c)(2) of this section, owners and operators of affected sources shall comply with the requirements in paragraph (c)(1) of this section for heat exchange systems that cool process equipment or materials used in pharmaceutical manufacturing operations.

(1) The heat exchange system shall be treated according to the provisions of §63.104, except that the monitoring frequency shall be no less than quarterly.

(2) For identifying leaking equipment, the owner or operator of heat exchange systems on equipment which meet current good manufacturing practice (CGMP) requirements of 21 CFR part 211 may elect to use the physical integrity of the reactor as the surrogate indicator of heat exchange system leaks around the reactor.

(d) *Emissions averaging provisions.* Except as specified in paragraphs (d)(1) through (5) of this section, owners or operators of storage tanks or processes subject to the provisions of §§63.1253 and 63.1254 may choose to comply by using emissions averaging requirements specified in §63.1257(g) or (h) for any storage tank or process.

(1) A State may prohibit averaging of HAP emissions and require the owner or operator of an existing source to comply with the provisions in §§63.1253 and 63.1254.

(2) Only emission sources subject to the requirements of §63.1253(b)(1) or (c)(1)(i) or §63.1254(a)(1)(i) may be included in any averaging group.

(3) Processes which have been permanently shutdown or storage tanks permanently taken out of HAP service may not be included in any averaging group.

(4) Processes and storage tanks already controlled on or before November 15, 1990 may not be included in an emissions averaging group, except where the level of control is increased after November 15, 1990. In these cases, the uncontrolled emissions shall be the controlled emissions as calculated on November 15, 1990 for the purpose of determining the uncontrolled emissions as specified in §63.1257(g) and (h).

(5) Emission points controlled to comply with a State or Federal rule other than this subpart may not be credited in an emission averaging group, unless the level of control has been increased after November 15, 1990 above what is required by the other State or Federal rule. Only the control above what is required by the other State or Federal rule will be credited. However, if an emission point has been used to generate emissions averaging credit in an approved emissions average, and the point is subsequently made subject to a State or Federal rule other than this subpart, the point can continue to generate emissions averaging credit for the purpose of complying with the previously approved average.

(6) Not more than 20 processes subject to §63.1254(a)(1)(i), and 20 storage tanks subject to §63.1253(b)(1) or

(c)(1)(i) at an affected source may be included in an emissions averaging group.

(7) Compliance with the emission standards in § 63.1253 shall be satisfied when the annual percent reduction efficiency is greater than or equal to 90 percent for those tanks meeting the criteria of § 63.1253(a)(1) and 95 percent for those tanks meeting the criteria of § 63.1253(a)(2), as demonstrated using the test methods and compliance procedures specified in § 63.1257(g).

(8) Compliance with the emission standards in § 63.1254(a)(1)(i) shall be satisfied when the annual percent reduction efficiency is greater than or equal to 93 percent, as demonstrated using the test methods and compliance procedures specified in § 63.1257(h).

(e) *Pollution prevention alternative.* Except as provided in paragraph (e)(1) of this section, an owner or operator may choose to meet the pollution prevention alternative requirement specified in either paragraph (e)(2) or (3) of this section for any PMPU or for any situation described in paragraph (e)(4) of this section, in lieu of the requirements specified in §§ 63.1253, 63.1254, 63.1255, and 63.1256. Compliance with paragraphs (e)(2) and (3) of this section shall be demonstrated through the procedures in § 63.1257(f). Any PMPU for which the owner or operator seeks to comply by using the pollution prevention alternative shall begin with the same starting material(s) and end with the same product(s). The owner or operator may not comply with the pollution prevention alternative by eliminating any steps of a process by transferring the step offsite (to another manufacturing location).

(1) The HAP that are generated in the PMPU that are not part of the production-indexed consumption factor must be controlled according to the requirements of §§ 63.1253, 63.1254, 63.1255, and 63.1256. The hydrogen halides that are generated as a result of combustion control of emissions must be controlled according to the requirements of paragraph (g)(1) of this section.

(2) The production-indexed HAP consumption factor (kg HAP consumed/kg produced) shall be reduced by at least 75 percent from a 3 year average baseline established no earlier than the 1987 calendar year, or for the time period from startup of the process until the present in which the PMPU was operational and data are available, whichever is the lesser time period. If a time period less than 3 years is used to set the baseline, the data must represent at least 1 year's worth of data. For any reduction in the HAP factor achieved by reducing a HAP that is also a VOC, an equivalent reduction in the VOC factor is also required. For any reduction in the HAP factor that is achieved by reducing a HAP that is not a VOC, the VOC factor may not be increased.

(3) Both requirements specified in paragraphs (e)(3)(i) and (ii) of this section are met.

(i) The production-indexed HAP consumption factor (kg HAP consumed/kg produced) shall be reduced by at least 50 percent from a 3-year average baseline established no earlier than the 1987 calendar year, or for the time period from startup of the process until the present in which the PMPU was operational and data are available, whichever is less. If a time period less than 3 years is used to set the baseline, the data must represent at least 1 year's worth of data. For any reduction in the HAP factor achieved by reducing a HAP that is also a VOC, an equivalent reduction in the VOC factor is also required. For any reduction in the HAP factor that is achieved by reducing a HAP that is not a VOC, the VOC factor may not be increased.

(ii) The total PMPU HAP emissions shall be reduced by an amount, in kg/yr, that, when divided by the annual production rate, in kg/yr, and added to the reduction of the production-indexed HAP consumption factor, in kg/kg, yields a value of at least 75 percent of the average baseline HAP production-indexed consumption factor established according to paragraph (e)(3)(i) of this section according to the equation provided in § 63.1257(f)(2)(ii)(A). The total PMPU VOC emissions shall be reduced by an amount calculated according to the equation provided in § 63.1257(f)(2)(ii)(B). The annual reduction in HAP and VOC air emissions must be due to the use of the following control devices:

(A) Combustion control devices such as incinerators, flares or process heaters.

(B) Control devices such as condensers and carbon adsorbers whose recovered product is destroyed or shipped offsite for destruction.

(C) Any control device that does not ultimately allow for recycling of material back to the PMPU.

(D) Any control device for which the owner or operator can demonstrate that the use of the device in controlling HAP emissions will have no effect on the production-indexed consumption factor for the PMPU.

(4) The owner or operator may comply with the requirements in either paragraph (e)(2) or (3) of this section for a series of processes, including situations where multiple processes are merged, subject to the following conditions:

(i) The baseline period shall be a single year beginning no earlier than the 1992 calendar year.

(ii) The term ''PMPU'' shall have the meaning provided in §63.1251 except that the baseline and modified PMPU may include multiple processes (*i.e.*, precursors, active ingredients, and final dosage form) if the owner or operator demonstrates to the satisfaction of the Administrator that the multiple processes were merged after the baseline period into an existing process or processes.

(iii) Nondedicated formulation and solvent recovery processes may not be merged with any other processes.

(f) *Control requirements for certain liquid streams in open systems within a PMPU.* (1) The owner or operator shall comply with the provisions of Table 5 of this subpart, for each item of equipment meeting all the criteria specified in paragraphs (f)(2) through (4) and either paragraph (f)(5)(i) or (ii) of this section.

(2) The item of equipment is of a type identified in Table 5 of this subpart;

(3) The item of equipment is part of a PMPU, as defined in §63.1251;

(4) The item of equipment is controlled less stringently than in Table 5 of this subpart and the item of equipment is not otherwise exempt from controls by the provisions of this subpart or subpart A of this part; and

(5) The item of equipment:

(i) Is a drain, drain hub, manhole, lift station, trench, pipe, or oil/water separator that conveys water with an annual average concentration greater than or equal to 1,300 parts per million by weight (ppmw) of partially soluble HAP compounds; or an annual average concentration greater than or equal to 5,200 ppmw of partially soluble and/or soluble HAP compounds. The annual average concentration shall be determined according to the procedures in §63.1257(e)(1)(ii).

(ii) Is a tank that receives one or more streams that contain water with an annual average concentration greater than or equal to 1,300 ppmw of partially soluble HAP compounds, or greater than or equal to 5,200 ppmw of total partially soluble and/or soluble HAP compounds. The owner or operator of the source shall determine the average concentration of the stream at the inlet to the tank and according to the procedures in §63.1257(e)(1)(ii).

(g) *Control requirements for halogenated vent streams that are controlled by combustion devices.* If a combustion device is used to comply with the provisions of §§63.1253 (storage tanks), 63.1254 (process vents), 63.1256(h) (wastewater vent streams) for a halogenated vent stream, then the vent stream shall be ducted to a halogen reduction device such as, but not limited to, a scrubber, before it is discharged to the atmosphere. The halogen reduction device must reduce emissions by the amounts specified in either paragraph (g)(1) or (2) of this section.

(1) A halogen reduction device after the combustion control device must reduce overall emissions of hydrogen halides and halogens, as defined in §63.1251, by 95 percent or to a concentration less than or equal to 20 ppmv.

(2) A halogen reduction device located before the combustion control device must reduce the halogen atom content of the vent stream to a concentration less than or equal to 20 ppmv.

(h) *Planned routine maintenance for centralized combustion control devices.* The owner or operator may operate non-dedicated PMPU's during periods of planned routine maintenance for

CCCD in accordance with the provisions specified in paragraphs (h)(1) through (6) of this section.

(1) For equipment leaks and wastewater emissions that normally are controlled by the CCCD, if any, the owner or operator must continue to comply with the requirements in §§ 63.1255(b)(4)(ii) and 63.1256(h), respectively, using other control devices during the planned routine maintenance period for the CCCD.

(2) During the planned routine maintenance period, the owner or operator must route emissions from process vents with organic HAP emissions greater than 15 pounds per day (lb/day) through a closed-vent system to a condenser that meets the conditions specified in paragraphs (h)(2)(i) through (iii) of this section.

(i) The outlet gas temperature must be less than −50 °C (−58 °F) when the emission stream contains organic HAP with a partial pressure greater than 20 kPa (2.9 psia).

(ii) The outlet gas temperature must be less than −5 °C (23 °F) when the emission stream contains organic HAP with a partial pressure less than or equal to 20 kPa (2.9 psia).

(iii) The HAP partial pressures in paragraphs (h)(2)(i) and (ii) of this section must be determined at 25 °C.

(3) The owner or operator must route HCl emissions from process vents with HCl emissions greater than 15 lb/day through a closed-vent system to a caustic scrubber, and the pH of the scrubber effluent must be maintained at or above 9.

(4) For the purposes of the emission calculations required in paragraphs (h)(2) and (3) of this section, the term ''process vent'' shall mean each vent from a unit operation. The emission calculation shall not be performed on the aggregated emission stream from multiple unit operations that are manifolded together into a common header. Once an affected process vent has been controlled in accordance with this section, it is no longer subject to the requirements of this section or § 63.1254 during the routine maintenance period.

(5) The total period of planned routine maintenance, during which nondedicated PMPU's that are normally controlled by the CCCD continue to operate, and process vent emissions are controlled as specified in paragraphs (h)(2) and (3) of this section, must not exceed 240 hours in any 365-day period.

(6) While being controlled as specified in paragraphs (h)(2) and (3) of this section, the process vents may not be used in emissions averaging.

[63 FR 50326, Sept. 21, 1998, as amended at 65 FR 52600, Aug. 29, 2000; 66 FR 40131, Aug. 2, 2001]

§ 63.1253 Standards: Storage tanks.

(a) Except as provided in paragraphs (d), (e), and (f) of this section, the owner or operator of a storage tank meeting the criteria of paragraph (a)(1) of this section is subject to the requirements of paragraph (b) of this section. Except as provided in paragraphs (d), (e), and (f) of this section, the owner or operator of a storage tank meeting the criteria of paragraph (a)(2) of this section is subject to the requirements of paragraph (c) of this section. Compliance with the provisions of paragraphs (b) and (c) of this section is demonstrated using the initial compliance procedures in § 63.1257(c) and the monitoring requirements in § 63.1258.

(1) A storage tank with a design capacity greater than or equal to 38 m^3 but less than 75 m^3 storing a liquid for which the maximum true vapor pressure of total HAP is greater than or equal to 13.1 kPa.

(2) A storage tank with a design capacity greater than or equal to 75 m^3 storing a liquid for which the maximum true vapor pressure of total HAP is greater than or equal to 13.1 kPa.

(b) The owner or operator of a storage tank shall equip the affected storage tank with either a fixed roof with internal floating roof, an external floating roof, an external floating roof converted to an internal floating roof, or a closed-vent system meeting the conditions of § 63.1252(b) with a control device that meets any of the following conditions:

(1) Reduces inlet emissions of total HAP by 90 percent by weight or greater;

(2) Reduces emissions to outlet concentrations less than or equal to 20 ppmv as TOC and less than or equal to

20 ppmv as hydrogen halides and halogens;

(3) Is an enclosed combustion device that provides a minimum residence time of 0.5 seconds at a minimum temperature of 760 °C;

(4) Is a flare that meets the requirements of §63.11(b); or

(5) Is a control device specified in §63.1257(a)(4).

(c) The owner or operator of a storage tank shall equip the affected storage tank with either a fixed roof with internal floating roof, an external floating roof, an external floating roof converted to an internal floating roof, or a closed-vent system meeting the conditions of §63.1252(b) with a control device that meets any of the following conditions:

(1) Reduces inlet emissions of total HAP as specified in paragraph (c)(1) (i) or (ii) of this section:

(i) By 95 percent by weight or greater; or (ii) If the owner or operator can demonstrate that a control device installed on a storage tank on or before April 2, 1997 is designed to reduce inlet emissions of total HAP by greater than or equal to 90 percent by weight but less than 95 percent by weight, then the control device is required to be operated to reduce inlet emissions of total HAP by 90 percent or greater.

(2) Reduces emissions to outlet concentrations less than or equal to 20 ppmv as TOC and less than or equal to 20 ppmv as hydrogen halides and halogens;

(3) Is an enclosed combustion device that provides a minimum residence time of 0.5 seconds at a minimum temperature of 760 °C;

(4) Is a flare that meets the requirements of §63.11(b); or

(5) Is a control device specified in §63.1257(a)(4).

(d) As an alternative standard, the owner or operator of an existing or new affected source may comply with the storage tank standards by routing storage tank vents to a combustion control device achieving an outlet TOC concentration, as calibrated on methane or the predominant HAP, of 20 ppmv or less, and an outlet concentration of hydrogen halides and halogens of 20 ppmv or less. If the owner or operator is routing emissions to a noncombustion control device, it must achieve an outlet TOC concentration, as calibrated on methane or the predominant HAP, of 50 ppmv or less, and an outlet concentration of hydrogen halides and halogens of 50 ppmv or less. Compliance with the outlet concentrations shall be determined by the initial compliance procedures of §63.1257(c)(4) and the continuous emission monitoring requirements of §63.1258(b)(5).

(e) *Planned routine maintenance.* The specifications and requirements in paragraphs (b) through (d) of this section for control devices do not apply during periods of planned routine maintenance. Periods of planned routine maintenance of the control devices (including CCCD subject to §63.1252(h)), during which the control device does not meet the specifications of paragraphs (b) through (d) of this section, as applicable, shall not exceed 240 hours in any 365-day period.

(f) *Vapor balancing alternative.* As an alternative to the requirements in paragraphs (b) and (c) of this section, the owner or operator of an existing or new affected source may implement vapor balancing in accordance with paragraphs (f)(1) through (7) of this section.

(1) The vapor balancing system must be designed and operated to route organic HAP vapors displaced from loading of the storage tank to the railcar or tank truck from which the storage tank is filled.

(2) Tank trucks and railcars must have a current certification in accordance with the U.S. Department of Transportation (DOT) pressure test requirements of 49 CFR part 180 for tank trucks and 49 CFR 173.31 for railcars.

(3) Hazardous air pollutants must only be unloaded from tank trucks or railcars when vapor collection systems are connected to the storage tank's vapor collection system.

(4) No pressure relief device on the storage tank, or on the railcar, or tank truck shall open during loading or as a result of diurnal temperature changes (breathing losses).

(5) Pressure relief devices on affected storage tanks must be set to no less than 2.5 psig at all times to prevent

breathing losses. The owner or operator shall record the setting as specified in § 63.1259(b)(12) and comply with the requirements for each pressure relief valve in paragraphs (f)(5)(i) through (iii) of this section:

(i) The pressure relief valve shall be monitored quarterly using the method described in § 63.180(b).

(ii) An instrument reading of 500 ppmv or greater defines a leak.

(iii) When a leak is detected, it shall be repaired as soon as practicable, but no later than 5 days after it is detected, and the owner or operator shall comply with the recordkeeping requirements of § 63.1255(g)(4)(i) through (iv).

(6) Railcars or tank trucks that deliver HAP to an affected storage tank must be reloaded or cleaned at a facility that utilizes one of the control techniques in paragraph (f)(6)(i) through (ii) of this section:

(i) The railcar or tank truck must be connected to a closed-vent system with a control device that reduces inlet emissions of HAP by 90 percent by weight or greater; or

(ii) A vapor balancing system designed and operated to collect organic HAP vapor displaced from the tank truck or railcar during reloading must be used to route the collected HAP vapor to the storage tank from which the liquid being transferred originated.

(7) The owner or operator of the facility where the railcar or tank truck is reloaded or cleaned must comply with the requirements in paragraph (f)(7)(i) through (iii) of this section:

(i) Submit to the owner or operator of the affected storage tank and to the Administrator a written certification that the reloading or cleaning facility will meet the requirements of this section. The certifying entity may revoke the written certification by sending a written statement to the owner or operator of the affected storage tank giving at least 90 days notice that the certifying entity is rescinding acceptance of responsibility for compliance with the requirements of this paragraph (f)(7).

(ii) If complying with paragraph (f)(6)(i) of this section, demonstrate initial compliance in accordance with § 63.1257(c), demonstrate continuous compliance in accordance with § 63.1258, keep records as specified in § 63.1259, and prepare reports as specified in § 63.1260.

(iii) If complying with paragraph (f)(6)(ii) of this section, keep records of:

(A) The equipment to be used and the procedures to be followed when reloading the railcar or tank truck and displacing vapors to the storage tank from which the liquid originates, and

(B) Each time the vapor balancing system is used to comply with paragraph (f)(6)(ii) of this section.

[63 FR 50326, Sept. 21, 1998, as amended at 65 FR 52601, Aug. 29, 2000; 66 FR 40132, Aug. 2, 2001]

§ 63.1254 Standards: Process vents.

(a) *Existing sources*. For each process, the owner or operator of an existing affected source must comply with the requirements in paragraphs (a)(1) and (3) of this section or paragraphs (a)(2) and (3) of this section. Initial compliance with the required emission limits or reductions in paragraphs (a)(1) through (3) of this section is demonstrated in accordance with the initial compliance procedures described in § 63.1257(d), and continuous compliance is demonstrated in accordance with the monitoring requirements described in § 63.1258.

(1) *Process-based emission reduction requirement*.

(i) Uncontrolled HAP emissions from the sum of all process vents within a process that are not subject to the requirements of paragraph (a)(3) of this section shall be reduced by 93 percent or greater by weight, or as specified in paragraph (a)(1)(ii) of this section. Notification of changes in the compliance method shall be reported according to the procedures in § 63.1260(h).

(ii) Any one or more vents within a process may be controlled in accordance with any of the procedures in paragraphs (a)(1)(ii)(A) through (D) of this section. All other vents within the process must be controlled as specified in paragraph (a)(1)(i) of this section.

(A) To outlet concentrations less than or equal to 20 ppmv as TOC and less than or equal to 20 ppmv as hydrogen halides and halogens;

(B) By a flare that meets the requirements of § 63.11(b);

(C) By a control device specified in § 63.1257(a)(4); or

(D) In accordance with the alternative standard specified in paragraph (c) of this section.

(2) *Process-based annual mass limit.* (i) Actual HAP emissions from the sum of all process vents within a process must not exceed 900 kilograms (kg) in any 365-day period.

(ii) Actual HAP emissions from the sum of all process vents within processes complying with paragraph (a)(2)(i) of this section are limited to a maximum of 1,800 kg in any 365-day period.

(iii) Emissions from vents that are subject to the requirements of paragraph (a)(3) of this section and emissions from vents that are controlled in accordance with the procedures in paragraph (c) of this section may be excluded from the sums calculated in paragraphs (a)(2)(i) and (ii) of this section.

(iv) The owner or operator may switch from compliance with paragraph (a)(2) of this section to compliance with paragraph (a)(1) of this section only after at least 1 year of operation in compliance with paragraph (a)(2) of this section. Notification of such a change in the compliance method shall be reported according to the procedures in § 63.1260(h).

(3) *Individual vent emission reduction requirements.*

(i) Except as provided in paragraph (a)(3)(ii) of this section, uncontrolled HAP emissions from a process vent must be reduced by 98 percent or in accordance with any of the procedures in paragraphs (a)(1)(ii)(A) through (D) of this section if the uncontrolled HAP emissions from the vent exceed 25 tons per year, and the flow-weighted average flowrate (FRa) calculated using Equation 1 of this subpart is less than or equal to the flowrate index (FRI) calculated using Equation 2 of this subpart.

$$FR_a = \frac{\sum_{i=1}^{n}(D_i)(FR_i)}{\sum_{i=1}^{n}(D_i)} \qquad \text{(Eq. 1)}$$

$$FRI = 0.02 * (HL) - 1{,}000 \qquad \text{(Eq. 2)}$$

Where:

FR_a = flow-weighted average flowrate for the vent, scfm

D_i = duration of each emission event, min

FR_i = flowrate of each emission event, scfm

n = number of emission events

FRI = flowrate index, scfm

HL = annual uncontrolled HAP emissions, lb/yr, as defined in § 63.1251

(ii) *Grandfathering provisions.* As an alternative to the requirements in paragraph (a)(3)(i) of this section, the owner or operator may comply with the provisions in paragraph (a)(3)(ii)(A), (B), or (C) of this section, if applicable.

(A) *Control device operation.* If the owner or operator can demonstrate that a process vent is controlled by a control device meeting the criteria specified in paragraph (a)(3)(ii)(A)(*1*) of this section, then the control device is required to be operated according to paragraphs (a)(3)(ii)(A)(*2*), (*3*), and (*4*) of this section:

(*1*) The control device was installed on any process vent that met the conditions of paragraph (a)(3)(i) of this section on or before April 2, 1997, and was operated to reduce uncontrolled emissions of total HAP by greater than or equal to 93 percent by weight, but less than 98 percent by weight;

(*2*) The device must be operated to reduce inlet emissions of total HAP by 93 percent or by the percent reduction specified for that control device in any preconstruction permit issued pursuant to regulations approved or promulgated through rulemaking under title I (including parts C or D) of the Clean Air Act, whichever is greater;

(*3*) The device must be replaced or upgraded to achieve at least 98 percent reduction of HAP or meet any of the conditions specified in paragraphs (a)(1)(ii)(A) through (D) of this section upon reconstruction or replacement.

(*4*) The device must be replaced or upgraded to achieve at least 98 percent reduction of HAP or meet any of the conditions specified in paragraphs (a)(1)(ii)(A) through (D) of this section by April 2, 2007, or 15 years after

issuance of the preconstruction permit, whichever is later.

(B) *Process operations.* If a process meets all of the conditions specified in paragraphs (a)(3)(ii)(B)(*1*) through (*3*) of this section, the required level of control for the process is the level that was achieved on or before April 2, 1997. This level of control is demonstrated using the same procedures that are used to demonstrate compliance with paragraph (a)(1) of this section.

(*1*) At least one vent in the process met the conditions of paragraph (a)(3)(i) of this section on or before April 2, 1997; and

(*2*) The overall control for the process on or before April 2, 1997 was greater than or equal to 93 percent by weight, but less than 98 percent by weight; and

(*3*) The production-indexed HAP consumption factor for the 12-month period in which the process was operated prior to the compliance date is less than one-half of the 3-year average baseline value established no earlier than the 1987 through 1989 calendar years.

(C) *Hydrogenation vents.* Processes meeting the conditions of paragraphs (a)(3)(ii)(C)(*1*) through (*3*) of this section are required to be operated to maintain the level of control achieved on or before April 2, 1997. For all other processes meeting the conditions of paragraph (a)(3)(ii)(C)(*3*) of this section, uncontrolled HAP emissions from the sum of all process vents within the process must be reduced by 95 percent or greater by weight.

(*1*) Processes containing a process vent that met the conditions of paragraph (a)(3)(i) of this section on or before April 2, 1997; and

(*2*) Processes that are controlled to greater than or equal to 93 percent by weight, but less than 98 percent by weight; and

(*3*) Processes with a hydrogenation vent that, in conjunction with all other process vents from the process that do not meet the conditions of paragraph (a)(3)(i) of this section, cannot meet the requirements of paragraph (a)(1) or (2) of this section.

(4) *Planned routine maintenance.* For each PMPU that is controlled with a CCCD, the owner or operator must comply with the provisions specified in either paragraph (a)(4)(i), (ii), or (iii) of this section during periods of planned routine maintenance of the CCCD. The owner or operator is not required to comply with the same provision for all of the PMPU's controlled by the CCCD.

(i) Shutdown the affected process.

(ii) Comply with the requirements of paragraphs (a)(1) through (3) of this section by using other means.

(iii) For a non-dedicated PMPU, implement the procedures described in paragraphs (a)(4)(iii)(A) through (C) of this section for those process vents that are normally controlled by the CCCD. This option is not available for process vents from dedicated PMPU's.

(A) If the owner or operator uses a CCCD to comply with the 93 percent reduction requirement in paragraph (a)(1)(i) or (ii) of this section, the outlet concentration limit in paragraph (a)(1)(ii)(A) of this section, the alternative standard as specified in paragraphs (a)(1)(ii)(D) and (c) of this section, or the annual mass limit in paragraph (a)(2) of this section, implement the provisions in § 63.1252(h) during planned routine maintenance of the CCCD.

(B) If the owner or operator reduces HAP emissions from process vents by using a CCCD that is also a control device specified in § 63.1257(a)(4), implement the provisions in § 63.1252(h) during planned routine maintenance of the CCCD.

(C) If the owner or operator uses a CCCD to reduce emissions from a process vent subject to paragraph (a)(3) of this section, implement the planned routine maintenance provisions in § 63.1252(h) for that vent only if the reason the planned routine maintenance is needed, and the reason it cannot be performed at a time when the vent subject to paragraph (a)(3) of this section is not operating, has been described in the Notification of Compliance Status Report or a periodic report submitted before the planned routine maintenance event.

(b) *New sources.* (1) Except as provided in paragraph (b)(2) of this section, uncontrolled HAP emissions from the sum of all process vents within a process at a new affected source shall be reduced by 98 percent or greater by weight or controlled in accordance

with any of requirements of paragraphs (a)(1)(ii)(A) through (D) of this section. Initial compliance with the required emission limit or reduction is demonstrated in accordance with the initial compliance procedures in §63.1257(d), and continuous compliance is demonstrated in accordance with the monitoring requirements described in §63.1258.

(2) *Annual mass limit*. The actual HAP emissions from the sum of all process vents for which the owner or operator is not complying with paragraph (b)(1) of this section are limited to 900 kg in any 365-day period.

(c) *Alternative standard*. As an alternative standard, the owner or operator of an existing or new affected source may comply with the process vent standards by routing vents from a process to a combustion control device achieving an outlet TOC concentration, as calibrated on methane or the predominant HAP, of 20 ppmv or less, and an outlet concentration of hydrogen halides and halogens of 20 ppmv or less. If the owner or operator is routing emissions to a noncombustion control device, it must achieve an outlet TOC concentration, as calibrated on methane or the predominant HAP, of 50 ppmv or less, and an outlet concentration of hydrogen halides and halogens of 50 ppmv or less. Any process vents within a process that are not routed to this control device must be controlled in accordance with the provisions of paragraph (a) or (b) of this section, as applicable. Initial compliance with the outlet concentrations is demonstrated in accordance with the initial compliance procedures described in §63.1257(d)(1)(iv), and continuous compliance is demonstrated in accordance with the emission monitoring requirements described in §63.1258(b)(5).

[65 FR 52601, Aug. 29, 2000, as amended at 66 FR 40132, Aug. 2, 2001]

§63.1255 Standards: Equipment leaks.

(a) *General Equipment Leak Requirements*. (1) The provisions of this section apply to pumps, compressors, agitators, pressure relief devices, sampling connection systems, open-ended valves or lines, valves, connectors, instrumentation systems, control devices, and closed-vent systems required by this section that are intended to operate in organic hazardous air pollutant service 300 hours or more during the calendar year within a source subject to the provisions of this subpart.

(2) *Consistency with other regulations*. After the compliance date for a process, equipment subject to both this section and either of the following will be required to comply only with the provisions of this subpart:

(i) 40 CFR part 60.

(ii) 40 CFR part 61.

(3) [Reserved]

(4) The provisions in §63.1(a)(3) of subpart A of this part do not alter the provisions in paragraph (a)(2) of this section.

(5) Lines and equipment not containing process fluids are not subject to the provisions of this section. Utilities, and other nonprocess lines, such as heating and cooling systems which do not combine their materials with those in the processes they serve, are not considered to be part of a process.

(6) The provisions of this section do not apply to bench-scale processes, regardless of whether the processes are located at the same plant site as a process subject to the provisions of this subpart.

(7) Equipment to which this section applies shall be identified such that it can be distinguished readily from equipment that is not subject to this section. Identification of the equipment does not require physical tagging of the equipment. For example, the equipment may be identified on a plant site plan, in log entries, or by designation of process boundaries by some form of weatherproof identification. If changes are made to the affected source subject to the leak detection requirements, equipment identification for each type of component shall be updated, if needed, within 90 calendar days or by the next Periodic Report following the end of the monitoring period for that component, whichever is later.

(8) Equipment that is in vacuum service is excluded from the requirements of this section.

(9) Equipment that is in organic HAP service, but is in such service less than 300 hours per calendar year, is excluded from the requirements of this section if

it is identified as required in paragraph (g)(9) of this section.

(10) When each leak is detected by visual, audible, or olfactory means, or by monitoring as described in § 63.180(b) or (c), the following requirements apply:

(i) A weatherproof and readily visible identification, marked with the equipment identification number, shall be attached to the leaking equipment.

(ii) The identification on a valve in light liquid or gas/vapor service may be removed after it has been monitored as specified in paragraph (e)(7)(iii) of this section, and no leak has been detected during the follow-up monitoring.

(iii) The identification on equipment, except on a valve in light liquid or gas/vapor service, may be removed after it has been repaired.

(11) Except as provided in paragraph (a)(11)(i) of this section, all terms in this subpart that define a period of time for completion of required tasks (*e.g.*, weekly, monthly, quarterly, annual) refer to the standard calendar periods unless specified otherwise in the section or paragraph that imposes the requirement.

(i) If the initial compliance date does not coincide with the beginning of the standard calendar period, an owner or operator may elect to utilize a period beginning on the compliance date, or may elect to comply in accordance with the provisions of paragraph (a)(11)(ii) or (iii) of this section.

(ii) Time periods specified in this subpart for completion of required tasks may be changed by mutual agreement between the owner or operator and the Administrator, as specified in subpart A of this part. For each time period that is changed by agreement, the revised period shall remain in effect until it is changed. A new request is not necessary for each recurring period.

(iii) Except as provided in paragraph (a)(11)(i) or (ii) of this section, where the period specified for compliance is a standard calendar period, if the initial compliance date does not coincide with the beginning of the calendar period, compliance shall be required according to the schedule specified in paragraph (a)(11)(iii)(A) or (B) of this section, as appropriate.

(A) Compliance shall be required before the end of the standard calendar period within which the initial compliance date occurs if there remain at least 3 days for tasks that must be performed weekly, at least 2 weeks for tasks that must be performed monthly, at least 1 month for tasks that must be performed each quarter, or at least 3 months for tasks that must be performed annually; or

(B) In all other cases, compliance shall be required before the end of the first full standard calendar period after the period within which the initial compliance date occurs.

(iv) In all instances where a provision of this subpart requires completion of a task during each of multiple successive periods, an owner or operator may perform the required task at any time during each period, provided the task is conducted at a reasonable interval after completion of the task during the previous period.

(12) In all cases where the provisions of this subpart require an owner or operator to repair leaks by a specified time after the leak is detected, it is a violation of this section to fail to take action to repair the leaks within the specified time. If action is taken to repair the leaks within the specified time, failure of that action to successfully repair the leak is not a violation of this section. However, if the repairs are unsuccessful, a leak is detected and the owner or operator shall take further action as required by applicable provisions of this section.

(b) *References.* (1) The owner or operator of a source subject to this section shall comply with the provisions of subpart H of this part, as specified in paragraphs (b)(2) through (4) of this section. The term ''process unit'' as used in subpart H of this part shall be considered to be defined the same as ''group of processes'' for sources subject to this subpart GGG. The term ''fuel gas system,'' as used in subpart H of this part, shall not apply for the purposes of this subpart GGG.

(2) Sections 63.160, 63.161, 63.162, 63.163, 63.167, 63.168, 63.170, 63.173, 63.175, 63.176, 63.181, and 63.182 shall not apply for the purposes of this subpart GGG. The owner or operator shall comply

with the provisions specified in paragraphs (b)(2)(i) through (viii) of this section.

(i) Sections 63.160 and 63.162 shall not apply; instead, the owner or operator shall comply with paragraph (a) of this section;

(ii) Section 63.161 shall not apply; instead, the owner or operator shall comply with §63.1251;

(iii) Sections 63.163 and 63.173 shall not apply; instead, the owner or operator shall comply with paragraph (c) of this section;

(iv) Section 63.167 shall not apply; instead, the owner or operator shall comply with paragraph (d) of this section;

(v) Section 63.168 shall not apply; instead, the owner or operator shall comply with paragraph (e) of this section;

(vi) Section 63.170 shall not apply; instead, the owner or operator shall comply with §63.1254;

(vii) Section 63.181 shall not apply; instead, the owner or operator shall comply with paragraph (g) of this section; and

(viii) Section 63.182 shall not apply; instead, the owner or operator shall comply with paragraph (h) of this section.

(3) The owner or operator shall comply with §§63.164, 63.165, 63.166, 63.169, 63.177, and 63.179 in their entirety, except that when these sections reference other sections of subpart H of this part, the references shall mean the sections specified in paragraphs (b)(2) and (4) of this section. Section 63.164 applies to compressors. Section 63.165 applies to pressure relief devices in gas/vapor service. Section 63.166 applies to sampling connection systems. Section 63.169 applies to pumps, valves, connectors, and agitators in heavy liquid service; instrumentation systems; and pressure relief devices in liquid service. Section 63.177 applies to general alternative means of emission limitation. Section 63.179 applies to alternative means of emission limitation for enclosed-vented process units.

(4) The owner or operator shall comply with §§63.171, 63.172, 63.174, 63.178, and 63.180, except as specified in paragraphs (b)(4)(i) through (vi) of this section.

(i) Section 63.171 shall apply, except §63.171(a) shall not apply. Instead, delay of repair of equipment for which leaks have been detected is allowed if one of the conditions in paragraphs (b)(4)(i)(A) through (B) exists:

(A) The repair is technically infeasible without a process shutdown. Repair of this equipment shall occur by the end of the next scheduled process shutdown.

(B) The owner or operator determines that repair personnel would be exposed to an immediate danger if attempting to repair without a process shutdown. Repair of this equipment shall occur by the end of the next scheduled process shutdown.

(ii) Section 63.172 shall apply for closed-vent systems used to comply with this section, and for control devices used to comply with this section only, except:

(A) Section 63.172(k) and (l) shall not apply. The owner or operator shall instead comply with paragraph (f) of this section.

(B) Owners or operators may, instead of complying with the provisions of §63.172(f), design a closed-vent system to operate at a pressure below atmospheric pressure. The system shall be equipped with at least one pressure gage or other pressure measurement device that can be read from a readily accessible location to verify that negative pressure is being maintained in the closed-vent system when the associated control device is operating.

(C) The requirements apply at all times, except as specified in §63.1250(g). The owner or operator may not comply with the planned routine maintenance provisions in §63.1252(h).

(iii) Section 63.174 shall apply except:

(A) Section 63.174(f), (g), and (h) shall not apply. Instead of §63.174(f), (g), and (h), the owner or operator shall comply with paragraph (f) of this section. Section 63.174(b)(3) shall not apply. Instead of §63.174(b)(3), the owner or operator shall comply with paragraphs (b)(4)(iii)(B) through (F) of this section.

(B) If the percent leaking connectors in a group of processes was greater than or equal to 0.5 percent during the initial monitoring period, monitoring shall be performed once per year until the percent leaking connectors is less than 0.5 percent.

(C) If the percent leaking connectors in the group of processes was less than 0.5 percent, but equal to or greater than 0.25 percent, during the initial or last required monitoring period, the owner or operator may elect to monitor once every 4 years. An owner or operator may comply with the requirements of this paragraph by monitoring at least 40 percent of the connectors in the first 2 years and the remainder of the connectors within the next 2 years. The percent leaking connectors will be calculated for the total of all required monitoring performed during the 4-year period.

(D) Except as provided in paragraph (b)(4)(iii)(B) of this section, if leaking connectors comprise at least 0.5 percent but less than 1.0 percent of the connectors during the last monitoring period, the owner or operator shall monitor at least once every 2 years for the next monitoring period. At the end of that 2-year monitoring period, if the percent leaking connectors is greater than or equal to 0.5 percent, the owner or operator shall monitor once per year until the percent leaking connectors is less than 0.5 percent. If, at the end of a monitoring period, the percent leaking connectors is less than 0.5 percent, the owner or operator shall monitor in accordance with paragraph (b)(4)(iii)(C) or (F) of this section, as appropriate.

(E) If an owner or operator determines that 1 percent or greater of the connectors in a group of processes are leaking, the owner or operator shall monitor the connectors once per year. The owner or operator may elect to use the provisions of paragraph (b)(4)(iii)(C), (D), or (F) of this section, as appropriate, after a monitoring period in which less than 1 percent of the connectors are determined to be leaking.

(F) The owner or operator may elect to perform monitoring once every 8 years if the percent leaking connectors in the group of processes was less than 0.25 percent during the initial or last required monitoring period. An owner or operator shall monitor at least 50 percent of the connectors in the first 4 years and the remainder of the connectors within the next 4 years. If the percent leaking connectors in the first 4 years is equal to or greater than 0.35 percent, the monitoring program shall revert at that time to the appropriate monitoring frequency specified in paragraph (b)(4)(iii)(C), (D), or (E) of this section.

(iv) Section 63.178 shall apply except:

(A) Section 63.178(b), requirements for pressure testing, may be applied to all processes (not just batch processes) and to supply lines between storage and processing areas.

(B) For pumps, the phrase ''at the frequencies specified in Table 1 of this subpart'' in § 63.178(c)(3)(iii) shall mean ''quarterly'' for the purposes of this subpart.

(v) Section 63.180 shall apply except § 63.180(b)(4)(ii)(A) through (C) shall not apply. Instead, calibration gases shall be a mixture of methane and air at a concentration of approximately, but less than, 10,000 parts per million methane for agitators; 2,000 parts per million for pumps; and 500 parts per million for all other equipment, except as provided in § 63.180(b)(4)(iii).

(vi) When §§ 63.171, 63.172, 63.174, 63.178, and 63.180 reference other sections in subpart H of this part, the references shall mean those sections specified in paragraphs (b)(2) and (b)(4)(i) through (v) of this section, as applicable.

(c) *Standards for Pumps in Light Liquid Service and Agitators in Gas/Vapor Service and in Light Liquid Service.* (1) The provisions of this section apply to each pump that is in light organic HAP liquid service, and to each agitator in organic HAP gas/vapor service or in light organic HAP liquid service.

(2)(i) *Monitoring.* Each pump and agitator subject to this section shall be monitored quarterly to detect leaks by the method specified in § 63.180(b) except as provided in §§ 63.177, 63.178, paragraph (f) of this section, and paragraphs (c)(5) through (9) of this section.

(ii) *Leak definition.* The instrument reading, as determined by the method as specified in § 63.180(b), that defines a leak is:

(A) For agitators, an instrument reading of 10,000 parts per million or greater.

(B) For pumps, an instrument reading of 2,000 parts per million or greater.

(iii) *Visual Inspections.* Each pump and agitator shall be checked by visual

inspection each calendar week for indications of liquids dripping from the pump or agitator seal. If there are indications of liquids dripping from the pump or agitator seal at the time of the weekly inspection, the owner or operator shall follow the procedure specified in either paragraph (c)(2)(iii)(A) or (B) of this section prior to the next weekly inspection.

(A) The owner or operator shall monitor the pump or agitator by the method specified in §63.180(b). If the instrument reading indicates a leak as specified in paragraph (c)(2)(ii) of this section, a leak is detected.

(B) The owner or operator shall eliminate the visual indications of liquids dripping.

(3) *Repair provisions.*

(i) When a leak is detected pursuant to paragraph (c)(2)(i), (c)(2)(iii)(A), (c)(5)(iv)(A), or (c)(5)(vi)(B) of this section, it shall be repaired as soon as practicable, but not later than 15 calendar days after it is detected, except as provided in paragraph (b)(4)(i) of this section.

(ii) A first attempt at repair shall be made no later than 5 calendar days after the leak is detected. First attempts at repair include, but are not limited to, the following practices where practicable:

(A) Tightening of packing gland nuts.

(B) Ensuring that the seal flush is operating at design pressure and temperature.

(4) *Calculation of percent leakers.* (i) The owner or operator shall decide no later than the end of the first monitoring period what groups of processes will be developed. Once the owner or operator has decided, all subsequent percent calculations shall be made on the same basis.

(ii) If, calculated on a 1-year rolling average, the greater of either 10 percent or three of the pumps in a group of processes leak, the owner or operator shall monitor each pump once per month, until the calculated 1-year rolling average value drops below 10 percent or three pumps, as applicable.

(iii) The number of pumps in a group of processes shall be the sum of all the pumps in organic HAP service, except that pumps found leaking in a continuous process within 1 quarter after startup of the pump shall not count in the percent leaking pumps calculation for that one monitoring period only.

(iv) Percent leaking pumps shall be determined by the following Equation 3:

$$\%P_L = [(P_L - P_S)/(P_T - P_S)] \times 100 \text{ (Eq. 3)}$$

Where:

$\%P_L$ = percent leaking pumps

P_L = number of pumps found leaking as determined through periodic monitoring as required in paragraphs (c)(2)(i) and (ii) of this section.

P_T = total pumps in organic HAP service, including those meeting the criteria in paragraphs (c)(5) and (6) of this section.

P_S = number of pumps in a continuous process leaking within 1 quarter of startup during the current monitoring period.

(5) *Exemptions.* Each pump or agitator equipped with a dual mechanical seal system that includes a barrier fluid system is exempt from the requirements of paragraphs (c)(1) through (c)(4)(iii) of this section, provided the following requirements are met:

(i) Each dual mechanical seal system is:

(A) Operated with the barrier fluid at a pressure that is at all times greater than the pump/agitator stuffing box pressure; or

(B) Equipped with a barrier fluid degassing reservoir that is connected by a closed-vent system to a control device that complies with the requirements of paragraph (b)(4)(ii) of this section; or

(C) Equipped with a closed-loop system that purges the barrier fluid into a process stream.

(ii) The barrier fluid is not in light liquid service.

(iii) Each barrier fluid system is equipped with a sensor that will detect failure of the seal system, the barrier fluid system, or both.

(iv) Each pump/agitator is checked by visual inspection each calendar week for indications of liquids dripping from the pump/agitator seal. If there are indications of liquids dripping from the pump or agitator seal at the time of the weekly inspection, the owner or operator shall follow the procedures specified in either paragraph

(c)(5)(iv)(A) or (B) of this section prior to the next required inspection.

(A) The owner or operator shall monitor the pump or agitator using the method specified in § 63.180(b) to determine if there is a leak of organic HAP in the barrier fluid. If the instrument reading indicates a leak, as specified in paragraph (c)(2)(ii) of this section, a leak is detected.

(B) The owner or operator shall eliminate the visual indications of liquids dripping.

(v) Each sensor as described in paragraph (c)(5)(iii) of this section is observed daily or is equipped with an alarm unless the pump is located within the boundary of an unmanned plant site.

(vi)(A) The owner or operator determines, based on design considerations and operating experience, criteria applicable to the presence and frequency of drips and to the sensor that indicate failure of the seal system, the barrier fluid system, or both.

(B) If indications of liquids dripping from the pump/agitator seal exceed the criteria established in paragraph (c)(5)(vi)(A) of this section, or if, based on the criteria established in paragraph (c)(5)(vi)(A) of this section, the sensor indicates failure of the seal system, the barrier fluid system, or both, a leak is detected.

(vii) When a leak is detected pursuant to paragraph (c)(5)(iv)(A) or (B) of this section, the leak must be repaired as specified in paragraph (c)(3) of this section.

(6) Any pump/agitator that is designed with no externally actuated shaft penetrating the pump/agitator housing is exempt from the requirements of paragraphs (c)(1) through (3) of this section.

(7) Any pump/agitator equipped with a closed-vent system capable of capturing and transporting any leakage from the seal or seals back to the process or to a control device that complies with the requirements of paragraph (b)(4)(ii) of this section is exempt from the requirements of paragraphs (c)(2) through (5) of this section.

(8) Any pump/agitator that is located within the boundary of an unmanned plant site is exempt from the weekly visual inspection requirement of paragraphs (c)(2)(iii) and (c)(5)(iv) of this section, and the daily requirements of paragraph (c)(5)(v) of this section, provided that each pump/agitator is visually inspected as often as practicable and at least monthly.

(9) If more than 90 percent of the pumps in a group of processes meet the criteria in either paragraph (c)(5) or (6) of this section, the group of processes is exempt from the requirements of paragraph (c)(4) of this section.

(d) *Standards: Open-Ended Valves or Lines.* (1)(i) Each open-ended valve or line shall be equipped with a cap, blind flange, plug, or a second valve, except as provided in § 63.177 and paragraphs (d)(4) through (6) of this section.

(ii) The cap, blind flange, plug, or second valve shall seal the open end at all times except during operations requiring process fluid flow through the open-ended valve or line, or during maintenance or repair. The cap, blind flange, plug, or second valve shall be in place within 1 hour of cessation of operations requiring process fluid flow through the open-ended valve or line, or within 1 hour of cessation of maintenance or repair. The owner or operator is not required to keep a record documenting compliance with the 1-hour requirement.

(2) Each open-ended valve or line equipped with a second valve shall be operated in a manner such that the valve on the process fluid end is closed before the second valve is closed.

(3) When a double block and bleed system is being used, the bleed valve or line may remain open during operations that require venting the line between the block valves but shall comply with paragraph (d)(1) of this section at all other times.

(4) Open-ended valves or lines in an emergency shutdown system which are designed to open automatically in the event of a process upset are exempt from the requirements of paragraphs (d)(1) through (d)(3) of this section.

(5) Open-ended valves or lines containing materials which would autocatalytically polymerize are exempt from the requirements of paragraphs (d)(1) through (d)(3) of this section.

(6) Open-ended valves or lines containing materials which could cause an

explosion, serious overpressure, or other safety hazard if capped or equipped with a double block and bleed system as specified in paragraphs (d)(1) through (d)(3) of this section are exempt from the requirements of paragraphs (d)(1) through (d)(3) of this section.

(e) *Standards: Valves in Gas/Vapor Service and in Light Liquid Service.* (1) The provisions of this section apply to valves that are either in gas organic HAP service or in light liquid organic HAP service.

(2) For existing and new affected sources, all valves subject to this section shall be monitored, except as provided in paragraph (f) of this section and in §63.177, by no later than 1 year after the compliance date.

(3) *Monitoring.* The owner or operator of a source subject to this section shall monitor all valves, except as provided in paragraph (f) of this section and in §63.177, at the intervals specified in paragraph (e)(4) of this section and shall comply with all other provisions of this section, except as provided in paragraph (b)(4)(i) of this section, §§63.178 and 63.179.

(i) The valves shall be monitored to detect leaks by the method specified in §63.180(b).

(ii) An instrument reading of 500 parts per million or greater defines a leak.

(4) *Subsequent monitoring frequencies.* After conducting the initial survey required in paragraph (e)(2) of this section, the owner or operator shall monitor valves for leaks at the intervals specified below:

(i) For a group of processes with 2 percent or greater leaking valves, calculated according to paragraph (e)(6) of this section, the owner or operator shall monitor each valve once per month, except as specified in paragraph (e)(9) of this section.

(ii) For a group of processes with less than 2 percent leaking valves, the owner or operator shall monitor each valve once each quarter, except as provided in paragraphs (e)(4)(iii) through (e)(4)(v) of this section.

(iii) For a group of processes with less than 1 percent leaking valves, the owner or operator may elect to monitor each valve once every 2 quarters.

(iv) For a group of processes with less than 0.5 percent leaking valves, the owner or operator may elect to monitor each valve once every 4 quarters.

(v) For a group of processes with less than 0.25 percent leaking valves, the owner or operator may elect to monitor each valve once every 2 years.

(5) *Calculation of percent leakers.* For a group of processes to which this subpart applies, an owner or operator may choose to subdivide the valves in the applicable group of processes and apply the provisions of paragraph (e)(4) of this section to each subgroup. If the owner or operator elects to subdivide the valves in the applicable group of processes, then the provisions of paragraphs (e)(5)(i) through (e)(5)(viii) of this section apply.

(i) The overall performance of total valves in the applicable group of processes must be less than 2 percent leaking valves, as detected according to paragraphs (e)(3) (i) and (ii) of this section and as calculated according to paragraphs (e)(6) (ii) and (iii) of this section.

(ii) The initial assignment or subsequent reassignment of valves to subgroups shall be governed by the provisions of paragraphs (e)(5)(ii) (A) through (C) of this section.

(A) The owner or operator shall determine which valves are assigned to each subgroup. Valves with less than 1 year of monitoring data or valves not monitored within the last 12 months must be placed initially into the most frequently monitored subgroup until at least 1 year of monitoring data has been obtained.

(B) Any valve or group of valves can be reassigned from a less frequently monitored subgroup to a more frequently monitored subgroup provided that the valves to be reassigned were monitored during the most recent monitoring period for the less frequently monitored subgroup. The monitoring results must be included with the less frequently monitored subgroup's monitoring event and associated next percent leaking valves calculation for that group.

(C) Any valve or group of valves can be reassigned from a more frequently monitored subgroup to a less frequently monitored subgroup provided

that the valves to be reassigned have not leaked for the period of the less frequently monitored subgroup (e.g., for the last 12 months, if the valve or group of valves is to be reassigned to a subgroup being monitored annually). Nonrepairable valves may not be reassigned to a less frequently monitored subgroup.

(iii) The owner or operator shall determine every 6 months if the overall performance of total valves in the applicable group of processes is less than 2 percent leaking valves and so indicate the performance in the next periodic report. If the overall performance of total valves in the applicable group of processes is 2 percent leaking valves or greater, the owner or operator shall revert to the program required in paragraphs (e)(2) through (e)(4) of this section. The overall performance of total valves in the applicable group of processes shall be calculated as a weighted average of the percent leaking valves of each subgroup according to the following Equation 4:

$$\%V_{LO} = \frac{\sum_{i=1}^{n}\left(\%V_{Li} \times V_i\right)}{\sum_{i=1}^{n} V_i} \qquad \text{(Eq. 4)}$$

where:

$\%V_{LO}$ = overall performance of total valves in the applicable process or group of processes

$\%V_{Li}$ = percent leaking valves in subgroup i, most recent value calculated according to the procedures in paragraphs (e)(6)(ii) and (iii) of this section

V_i = number of valves in subgroup i

(iv) *Records.* In addition to records required by paragraph (g) of this section, the owner or operator shall maintain records specified in paragraphs (e)(5)(iv)(A) through (D) of this section.

(A) Which valves are assigned to each subgroup,

(B) Monitoring results and calculations made for each subgroup for each monitoring period,

(C) Which valves are reassigned and when they were reassigned, and

(D) The results of the semiannual overall performance calculation required in paragraph (e)(5)(iii) of this section.

(v) The owner or operator shall notify the Administrator no later than 30 days prior to the beginning of the next monitoring period of the decision to subgroup valves. The notification shall identify the participating processes and the valves assigned to each subgroup.

(vi) *Semiannual reports.* In addition to the information required by paragraph (h)(3) of this section, the owner or operator shall submit in the periodic reports the information specified in paragraphs (e)(5)(vi)(A) and (B) of this section.

(A) Valve reassignments occurring during the reporting period, and

(B) Results of the semiannual overall performance calculation required by paragraph (e)(5)(iii) of this section.

(vii) To determine the monitoring frequency for each subgroup, the calculation procedures of paragraph (e)(6)(iii) of this section shall be used.

(viii) Except for the overall performance calculations required by paragraphs (e)(5)(i) and (e)(5)(iii) of this section, each subgroup shall be treated as if it were a process for the purposes of applying the provisions of this section.

(6)(i) The owner or operator shall decide no later than the implementation date of this subpart or upon revision of an operating permit how to group the processes. Once the owner or operator has decided, all subsequent percentage calculations shall be made on the same basis.

(ii) Percent leaking valves for each group of processes or subgroup shall be determined by the following Equation 5:

$$\%V_L = [V_L/V_T] \times 100 \qquad \textbf{(Eq. 5)}$$

Where:

$\%V_L$ = percent leaking valves as determined through periodic monitoring required in paragraphs (e)(2) through (4) of this section.

V_T = total valves monitored, in a monitoring period excluding valves monitored as required by (e)(7)(iii) of this section

(iii) When determining monitoring frequency for each group of processes

or subgroup subject to monthly, quarterly, or semiannual monitoring frequencies, the percent leaking valves shall be the arithmetic average of the percent leaking valves from the last two monitoring periods. When determining monitoring frequency for each group of processes or subgroup subject to annual or biennial (once every 2 years) monitoring frequencies, the percent leaking valves shall be the arithmetic average of the percent leaking valves from the last three monitoring periods.

(iv)(A) Nonrepairable valves shall be included in the calculation of percent leaking valves the first time the valve is identified as leaking and nonrepairable and as required to comply with paragraph (e)(6)(iv)(B) of this section. Otherwise, a number of nonrepairable valves (identified and included in the percent leaking calculation in a previous period) up to a maximum of 1 percent of the total number of valves in organic HAP service at a process may be excluded from calculation of percent leaking valves for subsequent monitoring periods.

(B) If the number of nonrepairable valves exceeds 1 percent of the total number of valves in organic HAP service at a process, the number of nonrepairable valves exceeding 1 percent of the total number of valves in organic HAP service shall be included in the calculation of percent leaking valves.

(7) *Repair provisions.* (i) When a leak is detected, it shall be repaired as soon as practicable, but no later than 15 calendar days after the leak is detected, except as provided in paragraph (b)(4)(i)) of this section.

(ii) A first attempt at repair shall be made no later than 5 calendar days after each leak is detected.

(iii) When a leak is repaired, the valve shall be monitored at least once within the first 3 months after its repair. Days that the valve is not in organic HAP service shall not be considered part of this 3 month period. The monitoring required by this paragraph is in addition to the monitoring required to satisfy the definitions of ''repaired'' and ''first attempt at repair.''

(A) The monitoring shall be conducted as specified in §63.180(b) and (c) as appropriate to determine whether the valve has resumed leaking.

(B) Periodic monitoring required by paragraphs (e)(2) through (4) of this section may be used to satisfy the requirements of paragraph (e)(7)(iii) of this section, if the timing of the monitoring period coincides with the time specified in paragraph (e)(7)(iii) of this section. Alternatively, other monitoring may be performed to satisfy the requirements of paragraph (e)(7)(iii) of this section, regardless of whether the timing of the monitoring period for periodic monitoring coincides with the time specified in paragraph (e)(7)(iii) of this section.

(C) If a leak is detected by monitoring that is conducted pursuant to paragraph (e)(7)(iii) of this section, the owner or operator shall follow the provisions of paragraphs (e)(7)(iii)(C)(*1*) and (*2*) of this section to determine whether that valve must be counted as a leaking valve for purposes of paragraph (e)(6) of this section.

(*1*) If the owner or operator elects to use periodic monitoring required by paragraphs (e)(2) through (4) of this section to satisfy the requirements of paragraph (e)(7)(iii) of this section, then the valve shall be counted as a leaking valve.

(*2*) If the owner or operator elects to use other monitoring prior to the periodic monitoring required by paragraphs (e)(2) through (4) of this section to satisfy the requirements of paragraph (e)(7)(iii) of this section, then the valve shall be counted as a leaking valve unless it is repaired and shown by periodic monitoring not to be leaking.

(8) First attempts at repair include, but are not limited to, the following practices where practicable:

(i) Tightening of bonnet bolts,

(ii) Replacement of bonnet bolts,

(iii) Tightening of packing gland nuts, and

(iv) Injection of lubricant into lubricated packing.

(9) Any equipment located at a plant site with fewer than 250 valves in organic HAP service in the affected source is exempt from the requirements for monthly monitoring specified in paragraph (e)(4)(i) of this section. Instead, the owner or operator

shall monitor each valve in organic HAP service for leaks once each quarter, or comply with paragraph (e)(4)(iii), (iv), or (v) of this section, except as provided in paragraph (f) of this section.

(f) *Unsafe to monitor/inspect, difficult to monitor/inspect, and inaccessible equipment.* (1) Equipment that is designated as unsafe to monitor, unsafe to inspect, difficult to monitor, difficult to inspect, or inaccessible is exempt from the monitoring requirements as specified in paragraphs (f)(1)(i) through (iv) of this section provided the owner or operator meets the requirements specified in paragraph (f)(2), (3), or (4) of this section, as applicable. All equipment must be assigned to a group of processes. Ceramic or ceramic-lined connectors are subject to the same requirements as inaccessible connectors.

(i) For pumps and agitators, paragraphs (c)(2), (3), and (4) of this section do not apply.

(ii) For valves, paragraphs (e)(2) through (7) of this section do not apply.

(iii) For connectors, § 63.174(b) through (e) and paragraphs (b)(4)(iii)(B) through (F) of this section do not apply.

(iv) For closed-vent systems, § 63.172(f)(1) and (2) and § 63.172(g) do not apply.

(2) *Equipment that is unsafe to monitor or unsafe to inspect.* (i) Valves, connectors, agitators, and pumps may be designated as unsafe to monitor if the owner or operator determines that monitoring personnel would be exposed to an immediate danger as a consequence of complying with the monitoring requirements referred to in paragraphs (f)(1)(i) through (iii) of this section.

(ii) Any part of a closed-vent system may be designated as unsafe to inspect if the owner or operator determines that monitoring personnel would be exposed to an immediate danger as a consequence of complying with the monitoring requirements referred to in paragraph (f)(1)(iv) of this section.

(iii) The owner or operator of equipment that is designated as unsafe to monitor must have a written plan that requires monitoring of the equipment as frequently as practicable during safe to monitor times, but not more frequently than the periodic monitoring schedule otherwise applicable to the group of processes in which the equipment is located.

(iv) For any parts of a closed-vent system designated as unsafe to inspect, the owner or operator must have a written plan that requires inspection of the closed-vent systems as frequently as practicable during safe to inspect times, but not more frequently than annually.

(3) *Equipment that is difficult to monitor or difficult to inspect.* (i) A valve, agitator, or pump may be designated as difficult to monitor if the owner or operator determines that the valve, agitator, or pump cannot be monitored without elevating the monitoring personnel more than 2 meters above a support surface, or it is not accessible in a safe manner when it is in organic HAP service.

(ii) Any part of a closed-vent system may be designated as difficult to inspect if the owner or operator determines that the equipment cannot be inspected without elevating the monitoring personnel more than 2 meters above a support surface, or it is not accessible in a safe manner when it is in organic HAP service.

(iii) At an existing source, any valve, agitator or pump within a group of processes that meets the criteria of paragraph (f)(3)(i) of this section may be designated as difficult to monitor, and any parts of a closed-vent system that meet the requirements of paragraph (f)(3)(ii) of this section may be designated as difficult to inspect. At a new affected source, an owner or operator may designate no more than 3 percent of valves as difficult to monitor.

(iv) The owner or operator of valves, agitators, or pumps designated as difficult to monitor must have a written plan that requires monitoring of the equipment at least once per calendar year or on the periodic monitoring schedule otherwise applicable to the group of processes in which the equipment is located, whichever is less frequent. For any part of a closed-vent system designated as difficult to inspect, the owner or operator must have a written plan that requires inspection of the closed-vent system at least once every 5 years.

(4) *Inaccessible, ceramic, or ceramic-lined connectors.* (i) A connector may be designated as inaccessible if it is:

(A) Buried;

(B) Insulated in a manner that prevents access to the connector by a monitor probe;

(C) Obstructed by equipment or piping that prevents access to the connector by a monitor probe;

(D) Unable to be reached from a wheeled scissor-lift or hydraulic-type scaffold which would allow access to equipment up to 7.6 meters (25 feet) above the ground; or

(E) Not able to be accessed at any time in a safe manner to perform monitoring. Unsafe access includes, but is not limited to, the use of a wheeled scissor-lift on unstable or uneven terrain, the use of a motorized man-lift basket in areas where an ignition potential exists, or access would require near proximity to hazards such as electrical lines, or would risk damage to equipment.

(ii) A connector may be designated as inaccessible if it would require elevating the monitoring personnel more than 2 meters above a permanent support surface or would require the erection of scaffold.

(iii) At an existing source, any connector that meets the criteria of paragraph (f)(4)(i) or (ii) of this section may be designated as inaccessible. At a new affected source, an owner or operator may designate no more than 3 percent of connectors as inaccessible.

(iv) If any inaccessible, ceramic, or ceramic-lined connector is observed by visual, audible, olfactory, or other means to be leaking, the leak shall be repaired as soon as practicable, but no later than 15 calendar days after the leak is detected, except as provided in paragraph (b)(4)(i) of this section.

(v) Any connector that is inaccessible or that is ceramic or ceramic-lined is exempt from the recordkeeping and reporting requirements of paragraphs (g) and (h) of this section.

(g) *Recordkeeping Requirements.* (1) An owner or operator of more than one group of processes subject to the provisions of this section may comply with the recordkeeping requirements for the groups of processes in one recordkeeping system if the system identifies with each record the program being implemented (e.g., quarterly monitoring) for each type of equipment. All records and information required by this section shall be maintained in a manner that can be readily accessed at the plant site. This could include physically locating the records at the plant site or accessing the records from a central location by computer at the plant site.

(2) *General recordkeeping.* Except as provided in paragraph (g)(5)(i) of this section and in paragraph (a)(9) of this section, the following information pertaining to all equipment subject to the requirements in this section shall be recorded:

(i)(A) A list of identification numbers for equipment (except connectors that are subject to paragraph (f)(4) of this section) subject to the requirements of this section. Except for equipment subject to the recordkeeping requirements in paragraphs (g)(2)(ii) through (viii) of this section, equipment need not be individually identified if, for a particular type of equipment, all items of that equipment in a designated area or length of pipe subject to the provisions of this section are identified as a group, and the number of subject items of equipment is indicated. The list for each type of equipment shall be completed no later than the completion of the initial survey required for that component. The list of identification numbers shall be updated, if needed, to incorporate equipment changes identified during the course of each monitoring period within 90 calendar days, or by the next Periodic Report, following the end of the monitoring period for the type of equipment component monitored, whichever is later.

(B) A schedule for monitoring connectors subject to the provisions of §63.174(a) and valves subject to the provisions of paragraph (e)(4) of this section.

(C) Physical tagging of the equipment to indicate that it is in organic HAP service is not required. Equipment subject to the provisions of this section may be identified on a plant site plan, in log entries, or by other appropriate methods.

(ii)(A) A list of identification numbers for equipment that the owner or

operator elects to equip with a closed-vent system and control device, under the provisions of paragraph (c)(7) of this section, § 63.164(h), or § 63.165(c).

(B) A list of identification numbers for compressors that the owner or operator elects to designate as operating with an instrument reading of less than 500 parts per million above background, under the provisions of § 63.164(i).

(iii)(A) A list of identification numbers for pressure relief devices subject to the provisions in § 63.165(a).

(B) A list of identification numbers for pressure relief devices equipped with rupture disks, under the provisions of § 63.165(d).

(iv) Identification of instrumentation systems subject to the provisions of this section. Individual components in an instrumentation system need not be identified.

(v) The following information shall be recorded for each dual mechanical seal system:

(A) Design criteria required by paragraph (c)(5)(vi)(A) of this section and § 63.164(e)(2), and an explanation of the design criteria; and

(B) Any changes to these criteria and the reasons for the changes.

(vi) A list of equipment designated as unsafe to monitor/inspect or difficult to monitor/inspect under paragraph (f) of this section and a copy of the plan for monitoring or inspecting this equipment.

(vii) A list of connectors removed from and added to the process, as described in § 63.174(i)(1), and documentation of the integrity of the weld for any removed connectors, as required in § 63.174(j). This is not required unless the net credits for removed connectors is expected to be used.

(viii) For equipment that the owner or operator elects to monitor as provided under § 63.178(c), a list of equipment added to batch product processes since the last monitoring period required in § 63.178(c)(3)(ii) and (iii). This list must be completed for each type of equipment within 90 calendar days, or by the next Periodic Report, following the end of the monitoring period for the type of equipment monitored, whichever is later. Also, if the owner or operator elects to adjust monitoring frequency by the time in use, as provided in § 63.178(c)(3)(iii), records demonstrating the proportion of the time during the calendar year the equipment is in use in a manner subject to the provisions of this section are required. Examples of suitable documentation are records of time in use for individual pieces of equipment or average time in use for the process unit.

(3) *Records of visual inspections.* For visual inspections of equipment subject to the provisions of paragraphs (c)(2)(iii) and (c)(5)(iv) of this section, the owner or operator shall document that the inspection was conducted and the date of the inspection. The owner or operator shall maintain records as specified in paragraph (g)(4) of this section for leaking equipment identified in this inspection, except as provided in paragraph (g)(5) of this section. These records shall be retained for 2 years.

(4) *Monitoring records.* When each leak is detected as specified in paragraph (c) of this section and § 63.164, paragraph (e) of this section and § 63.169, and §§ 63.172 and 63.174, the following information shall be recorded and kept for 5 years (at least 2 years onsite, with the remaining 3 years either onsite or offsite):

(i) The instrument and the equipment identification number and the operator name, initials, or identification number.

(ii) The date the leak was detected and the date of the first attempt to repair the leak.

(iii) The date of successful repair of the leak.

(iv) The maximum instrument reading measured by Method 21 of 40 CFR part 60, appendix A, after the leak is successfully repaired or determined to be nonrepairable.

(v) ''Repair delayed'' and the reason for the delay if a leak is not repaired within 15 calendar days after discovery of the leak.

(A) The owner or operator may develop a written procedure that identifies the conditions that justify a delay of repair. The written procedures shall be included either as part of the start-up/shutdown/malfunction plan, required by § 63.1259(a)(3), or in a separate

document that is maintained at the plant site. Reasons for delay of repair may be documented by citing the relevant sections of the written procedure.

(B) If delay of repair was caused by depletion of stocked parts, there must be documentation that the spare parts were sufficiently stocked onsite before depletion and the reason for depletion.

(vi) If repairs were delayed, dates of process shutdowns that occur while the equipment is unrepaired.

(vii)(A) If the alternative in § 63.174(c)(1)(ii) is not in use for the monitoring period, identification, either by list, location (area or grouping), or tagging of connectors disturbed since the last monitoring period required in § 63.174(b), as described in § 63.174(c)(1).

(B) The date and results of follow-up monitoring as required in § 63.174(c)(1)(i) and (c)(2)(ii). If identification of disturbed connectors is made by location, then all connectors within the designated location shall be monitored.

(viii) The date and results of the monitoring required in § 63.178(c)(3)(i) for equipment added to a batch process since the last monitoring period required in § 63.178(c)(3)(ii) and (iii). If no leaking equipment is found in this monitoring, the owner or operator shall record that the inspection was performed. Records of the actual monitoring results are not required.

(ix) Copies of the periodic reports as specified in paragraph (h)(3) of this section, if records are not maintained on a computerized data base capable of generating summary reports from the records.

(5) *Records of pressure tests*. The owner or operator who elects to pressure test a process equipment train or supply lines between storage and processing areas to demonstrate compliance with this section is exempt from the requirements of paragraphs (g)(2), (3), (4), and (6) of this section. Instead, the owner or operator shall maintain records of the following information:

(i) The identification of each product, or product code, produced during the calendar year. It is not necessary to identify individual items of equipment in the process equipment train.

(ii) Physical tagging of the equipment to identify that it is in organic HAP service and subject to the provisions of this section is not required. Equipment in a process subject to the provisions of this section may be identified on a plant site plan, in log entries, or by other appropriate methods.

(iii) The dates of each pressure test required in § 63.178(b), the test pressure, and the pressure drop observed during the test.

(iv) Records of any visible, audible, or olfactory evidence of fluid loss.

(v) When a process equipment train does not pass two consecutive pressure tests, the following information shall be recorded in a log and kept for 2 years:

(A) The date of each pressure test and the date of each leak repair attempt.

(B) Repair methods applied in each attempt to repair the leak.

(C) The reason for the delay of repair.

(D) The expected date for delivery of the replacement equipment and the actual date of delivery of the replacement equipment.

(E) The date of successful repair.

(6) *Records of compressor and relief device compliance tests*. The dates and results of each compliance test required for compressors subject to the provisions in § 63.164(i) and the dates and results of the monitoring following a pressure release for each pressure relief device subject to the provisions in §§ 63.165(a) and (b). The results shall include:

(i) The background level measured during each compliance test.

(ii) The maximum instrument reading measured at each piece of equipment during each compliance test.

(7) *Records for closed-vent systems*. The owner or operator shall maintain records of the information specified in paragraphs (g)(7)(i) through (iii) of this section for closed-vent systems and control devices subject to the provisions of paragraph (b)(4)(ii) of this section. The records specified in paragraph (g)(7)(i) of this section shall be retained for the life of the equipment. The records specified in paragraphs (g)(7)(ii) and (g)(7)(iii) of this section shall be retained for 2 years.

(i) The design specifications and performance demonstrations specified in paragraphs (g)(7)(i)(A) through (g)(7)(i)(D) of this section.

(A) Detailed schematics, design specifications of the control device, and piping and instrumentation diagrams.

(B) The dates and descriptions of any changes in the design specifications.

(C) The flare design (i.e., steam assisted, air assisted, or nonassisted) and the results of the compliance demonstration required by § 63.11(b).

(D) A description of the parameter or parameters monitored, as required in paragraph (b)(4)(ii) of this section, to ensure that control devices are operated and maintained in conformance with their design and an explanation of why that parameter (or parameters) was selected for the monitoring.

(ii) Records of operation of closed-vent systems and control devices.

(A) Dates and durations when the closed-vent systems and control devices required in paragraph (c) of this section and §§ 63.164 through 63.166 are not operated as designed as indicated by the monitored parameters, including periods when a flare pilot light system does not have a flame.

(B) Dates and durations during which the monitoring system or monitoring device is inoperative.

(C) Dates and durations of startups and shutdowns of control devices required in paragraph (c)(7) of this section and §§ 63.164 through 63.166.

(iii) Records of inspections of closed-vent systems subject to the provisions of § 63.172.

(A) For each inspection conducted in accordance with the provisions of § 63.172(f)(1) or (f)(2) during which no leaks were detected, a record that the inspection was performed, the date of the inspection, and a statement that no leaks were detected.

(B) For each inspection conducted in accordance with the provisions of § 63.172(f)(1) or (f)(2) during which leaks were detected, the information specified in paragraph (g)(4) of this section shall be recorded.

(8) *Records for components in heavy liquid service.* Information, data, and analysis used to determine that a piece of equipment or process is in heavy liquid service shall be recorded. Such a determination shall include an analysis or demonstration that the process fluids do not meet the criteria of ''in light liquid or gas service.'' Examples of information that could document this include, but are not limited to, records of chemicals purchased for the process, analyses of process stream composition, engineering calculations, or process knowledge.

(9) *Records of exempt components.* Identification, either by list, location (area or group) of equipment in organic HAP service less than 300 hours per year subject to the provisions of this section.

(10) *Records of alternative means of compliance determination.* Owners and operators choosing to comply with the requirements of § 63.179 shall maintain the following records:

(i) Identification of the process(es) and the organic HAP they handle.

(ii) A schematic of the process, enclosure, and closed-vent system.

(iii) A description of the system used to create a negative pressure in the enclosure to ensure that all emissions are routed to the control device.

(h) *Reporting Requirements.* (1) Each owner or operator of a source subject to this section shall submit the reports listed in paragraphs (h)(1)(i) through (ii) of this section.

(i) A Notification of Compliance Status Report described in paragraph (h)(2) of this section,

(ii) Periodic reports described in paragraph (h)(3) of this section.

(2) *Notification of compliance status report.* Each owner or operator of a source subject to this section shall submit the information specified in paragraphs (h)(2)(i) through (iii) of this section in the Notification of Compliance Status Report described in § 63.1260(f).

(i) The notification shall provide the information listed in paragraphs (h)(2)(i)(A) through (C) of this section for each process subject to the requirements of paragraphs (b) through (g) of this section.

(A) Process group identification.

(B) Number of each equipment type (*e.g.*, valves, pumps) in organic HAP service, excluding equipment in vacuum service.

(C) Method of compliance with the standard (for example, ''monthly leak

detection and repair'' or ''equipped with dual mechanical seals'').

(ii) The notification shall provide the information listed in paragraphs (h)(2)(ii)(A) and (B) of this section for each process subject to the requirements of paragraph (b)(4)(iv) of this section and §63.178(b).

(A) Products or product codes subject to the provisions of this section, and

(B) Planned schedule for pressure testing when equipment is configured for production of products subject to the provisions of this section.

(iii) The notification shall provide the information listed in paragraphs (h)(2)(iii)(A) and (B) of this section for each process subject to the requirements in §63.179.

(A) Process identification.

(B) A description of the system used to create a negative pressure in the enclosure and the control device used to comply with the requirements of paragraph (b)(4)(ii) of this section.

(iv) Section 63.9(j) shall not apply to the Notification of Compliance Status report described in this paragraph (h)(2).

(3) *Periodic reports.* The owner or operator of a source subject to this section shall submit Periodic Reports.

(i) A report containing the information in paragraphs (h)(3)(ii), (iii), and (iv) of this section shall be submitted semiannually. The first report shall be submitted no later than 240 days after the Notification of Compliance Status Report is due and shall cover the 6-month period beginning on the date the Notification of Compliance Status Report is due. Each subsequent report shall cover the 6-month period following the preceding period.

(ii) For equipment complying with the provisions of paragraphs (b) through (g) of this section, except paragraph (b)(4)(iv) of this section and §63.179, the summary information listed in paragraphs (h)(3)(ii)(A) through (L) of this section for each monitoring period during the 6-month period.

(A) The number of valves for which leaks were detected as described in paragraph (e)(3) of this section, the percent leakers, and the total number of valves monitored;

(B) The number of valves for which leaks were not repaired as required in paragraph (e)(7) of this section, identifying the number of those that are determined nonrepairable;

(C) Separately, the number of pumps and agitators for which leaks were detected as described in paragraph (c)(2) of this section, the total number of pumps and agitators monitored, and, for pumps, the percent leakers;

(D) Separately, the number of pumps and agitators for which leaks were not repaired as required in paragraph (c)(3) of this section;

(E) The number of compressors for which leaks were detected as described in §63.164(f);

(F) The number of compressors for which leaks were not repaired as required in §63.164(g);

(G) The number of connectors for which leaks were detected as described in §63.174(a), the percent of connectors leaking, and the total number of connectors monitored;

(H) The number of connectors for which leaks were not repaired as required in §63.174(d), identifying the number of those that are determined nonrepairable;

(I) The facts that explain any delay of repairs and, where appropriate, why a process shutdown was technically infeasible.

(J) The results of all monitoring to show compliance with §§63.164(i), 63.165(a), and 63.172(f) conducted within the semiannual reporting period.

(K) If applicable, the initiation of a monthly monitoring program under either paragraph (c)(4)(ii) or paragraph (e)(4)(i) of this section.

(L) If applicable, notification of a change in connector monitoring alternatives as described in §63.174(c)(1).

(iii) For owners or operators electing to meet the requirements of §63.178(b), the report shall include the information listed in paragraphs (h)(3)(iii)(A) through (E) of this paragraph for each process.

(A) Product process equipment train identification;

(B) The number of pressure tests conducted;

(C) The number of pressure tests where the equipment train failed either the retest or two consecutive pressure tests;

(D) The facts that explain any delay of repairs; and

(E) The results of all monitoring to determine compliance with § 63.172(f) of subpart H.

(iv) Any revisions to items reported in earlier Notification of Compliance Status report, if the method of compliance has changed since the last report.

[63 FR 50326, Sept. 21, 1998, as amended at 65 FR 52603, Aug. 29, 2000; 66 FR 40132, Aug. 2, 2001]

§ 63.1256 Standards: Wastewater.

(a) *General*. Each owner or operator of any affected source (existing or new) shall comply with the general wastewater requirements in paragraphs (a)(1) through (3) of this section and the maintenance wastewater provisions in paragraph (a)(4) of this section. An owner or operator may transfer wastewater to a treatment operation not owned by the owner or operator in accordance with paragraph (a)(5) of this section.

(1) *Identify wastewater that requires control*. For each POD, the owner or operator shall comply with the requirements in either paragraph (a)(1)(i) or (ii) of this section to determine whether a wastewater stream is an affected wastewater stream that requires control for soluble and/or partially soluble HAP compounds or to designate the wastewater stream as an affected wastewater stream, respectively. The owner or operator may use a combination of the approaches in paragraphs (a)(1)(i) and (ii) of this section for different affected wastewater generated at the source.

(i) *Determine characteristics of a wastewater stream*. At new and existing sources, a wastewater stream is an affected wastewater stream if the annual average concentration and annual load exceed any of the criteria specified in paragraph (a)(1)(i)(A) through (C) of this section. At new sources, a wastewater stream is subject to additional control requirements if the annual average concentration and annual load exceed the criteria specified in paragraphs (a)(1)(i)(D) of this section. The owner or operator shall comply with the provisions of § 63.1257(e)(1) to determine the annual average concentrations and annual load of partially soluble and soluble HAP compounds.

(A) The wastewater stream contains partially soluble HAP compounds at an annual average concentration greater than 1,300 ppmw, and the total soluble and partially soluble HAP load in all wastewater from the PMPU exceeds 0.25 Mg/yr.

(B) The wastewater stream contains partially soluble and/or soluble HAP compounds at an annual average concentration greater than 5,200 ppmw, and the total soluble and partially soluble HAP load in all wastewater from the PMPU exceeds 0.25 Mg/yr.

(C) The wastewater stream contains partially soluble and/or soluble HAP at an annual average concentration of greater than 10,000 ppmw, and the total partially soluble and/or soluble HAP load in all wastewater from the affected source is greater than 1 Mg/yr.

(D) The wastewater stream contains soluble HAP compounds at an annual average concentration greater than 110,000 ppmw, and the total soluble and partially soluble HAP load in all wastewater from the PMPU exceeds 1 Mg/yr.

(ii) *Designate wastewater as affected wastewater*. For existing sources, the owner or operator may elect to designate wastewater streams as meeting the criteria of either paragraphs (a)(1)(i)(A),(B), or (C) of this section. For new sources, the owner or operator may elect to designate wastewater streams meeting the criterion in paragraph (a)(1)(i)(D) or for wastewater known to contain no soluble HAP, as meeting the criterion in paragraph (a)(1)(i)(A) of this section. For designated wastewater the procedures specified in paragraphs (a)(1)(ii)(A) and (B) of this section shall be followed, except as specified in paragraphs (g)(8)(i), (g)(9)(i), and (g)(10) of this section. The owner or operator is not required to determine the annual average concentration or load for each designated wastewater stream for the purposes of this section.

(A) From the POD for the wastewater stream that is designated as an affected wastewater stream to the location where the owner or operator elects to designate such wastewater stream as an affected wastewater stream, the owner or operator shall comply with

all applicable emission suppression requirements specified in paragraphs (b) through (f) of this section.

(B) From the location where the owner or operator designates a wastewater stream as an affected wastewater stream, such wastewater stream shall be managed in accordance with all applicable emission suppression requirements specified in paragraphs (b) through (f) of this section and with the treatment requirements in paragraph (g) of this section.

(iii) *Scrubber Effluent.* Effluent from a water scrubber that has been used to control Table 2 HAP-containing vent streams that are controlled in order to meet the process vent requirements in § 63.1254 of this subpart is considered an affected wastewater stream.

(2) *Requirements for affected wastewater.* (i) An owner or operator of a facility shall comply with the applicable requirements for wastewater tanks, surface impoundments, containers, individual drain systems, and oil/water separators as specified in paragraphs (b) through (f) of this section, except as provided in paragraph (g)(3) of this section.

(ii) Comply with the applicable requirements for control of soluble and partially soluble compounds as specified in paragraph (g) of this section. Alternatively, the owner or operator may elect to comply with the treatment provisions specified in paragraph (a)(5) of this section.

(iii) Comply with the applicable monitoring and inspection requirements specified in § 63.1258.

(iv) Comply with the applicable recordkeeping and reporting requirements specified in §§ 63.1259 and 63.1260.

(3) *Requirements for multiphase discharges.* The owner or operator shall not discharge a separate phase that can be isolated through gravity separation from the aqueous phase to a waste management or treatment unit, unless the stream is discharged to a treatment unit in compliance with paragraph (g)(13) of this section.

(4) *Maintenance wastewater requirements.* Each owner or operator of a source subject to this subpart shall comply with the requirements of paragraphs (a)(4)(i) through (iv) of this section for maintenance wastewater containing partially soluble or soluble HAP listed in Tables 2 and 3 of this subpart. Maintenance wastewater is exempt from all other provisions of this subpart.

(i) The owner or operator shall prepare a description of maintenance procedures for management of wastewater generated from the emptying and purging of equipment in the process during temporary shutdowns for inspections, maintenance, and repair (*i.e.*, a maintenance turnaround) and during periods which are not shutdowns (*i.e.*, routine maintenance). The descriptions shall:

(A) Specify the process equipment or maintenance tasks that are anticipated to create wastewater during maintenance activities; and

(B) Specify the procedures that will be followed to properly manage the wastewater and minimize organic HAP emissions to the atmosphere; and

(C) Specify the procedures to be followed when clearing materials from process equipment.

(ii) The owner or operator shall modify and update the information required by paragraph (a)(4)(i) of this section as needed following each maintenance procedure based on the actions taken and the wastewater generated in the preceding maintenance procedure.

(iii) The owner or operator shall implement the procedures described in paragraphs (a)(4)(i) and (ii) of this section as part of the startup, shutdown, and malfunction plan required under § 63.6(e)(3).

(iv) The owner or operator shall maintain a record of the information required by paragraphs (a)(4)(i) and (ii) of this section as part of the startup, shutdown, and malfunction plan required under § 63.6(e)(3).

(5) *Offsite treatment or onsite treatment not owned or operated by the source.* The owner or operator may elect to transfer affected wastewater streams or a residual removed from such affected wastewater to an onsite treatment operation not owned or operated by the owner or operator of the source generating the wastewater or residual, or to an offsite treatment operation.

(i) The owner or operator transferring the wastewater or residual shall:

(A) Comply with the provisions specified in paragraphs (b) through (f) of

this section for each waste management unit that receives or manages affected wastewater or a residual removed from affected wastewater prior to shipment or transport.

(B) Include a notice with each shipment or transport of affected wastewater or residual removed from affected wastewater. The notice shall state that the affected wastewater or residual contains organic HAP that are to be treated in accordance with the provisions of this subpart. When the transport is continuous or ongoing (for example, discharge to a publicly-owned treatment works), the notice shall be submitted to the treatment operator initially and whenever there is a change in the required treatment. The owner or operator shall keep a record of the notice in accordance with § 63.1259(g).

(ii) The owner or operator may not transfer the affected wastewater or residual unless the transferee has submitted to the EPA a written certification that the transferee will manage and treat any affected wastewater or residual removed from affected wastewater received from a source subject to the requirements of this subpart in accordance with the requirements of either:

(A) Paragraphs (b) through (i) of this section; or

(B) Subpart D of this part if alternative emission limitations have been granted the transferor in accordance with those provisions; or

(C) Section 63.6(g); or

(D) If the affected wastewater streams or residuals removed from affected wastewater streams received by the transferee contain less than 50 ppmw of partially soluble HAP, then the transferee must, at a minimum, manage and treat the affected wastewater streams and residuals in accordance with one of the following:

(*1*) Comply with paragraph (g)(10) of this section and cover the waste management units up to the activated sludge unit; or

(*2*) Comply with paragraphs (g)(11)(i), (ii), and (h) of this section and cover the waste management units up to the activated sludge unit; or

(*3*) Comply with paragraph (g)(10) of this section provided that the owner or operator of the affected source demonstrates that less than 5 percent of the total soluble HAP is emitted from waste management units up to the activated sludge unit; or

(*4*) Comply with paragraphs (g)(11)(i), (ii), and (h) of this section provided that the owner or operator of the affected source demonstrates that less than 5 percent of the total soluble HAP is emitted from waste management units up to the activated sludge unit.

(iii) The certifying entity may revoke the written certification by sending a written statement to the EPA and the owner or operator giving at least 90 days notice that the certifying entity is rescinding acceptance of responsibility for compliance with the regulatory provisions listed in this paragraph. Upon expiration of the notice period, the owner or operator may not transfer the wastewater stream or residual to the treatment operation.

(iv) By providing this written certification to the EPA, the certifying entity accepts responsibility for compliance with the regulatory provisions listed in paragraph (a)(5)(ii) of this section with respect to any shipment of wastewater or residual covered by the written certification. Failure to abide by any of those provisions with respect to such shipments may result in enforcement action by the EPA against the certifying entity in accordance with the enforcement provisions applicable to violations of these provisions by owners or operators of sources.

(v) Written certifications and revocation statements, to the EPA from the transferees of wastewater or residuals shall be signed by the responsible official of the certifying entity, provide the name and address of the certifying entity, and be sent to the appropriate EPA Regional Office at the addresses listed in § 63.13. Such written certifications are not transferable by the treater.

(b) *Wastewater tanks.* For each wastewater tank that receives, manages, or treats affected wastewater or a residual removed from affected wastewater, the owner or operator shall comply with the requirements of either paragraph (b)(1) or (2) of this section as specified in Table 6 of this subpart.

(1) The owner or operator shall operate and maintain a fixed roof except when the contents of the wastewater tank are heated, treated by means of an exothermic reaction, or sparged, during which time the owner or operator shall comply with the requirements specified in paragraph (b)(2) of this section. For the purposes of this paragraph, the requirements of paragraph (b)(2) of this section are satisfied by operating and maintaining a fixed roof if the owner or operator demonstrates that the total soluble and partially soluble HAP emissions from the wastewater tank are no more than 5 percent higher than the emissions would be if the contents of the wastewater tank were not heated, treated by an exothermic reaction, or sparged.

(2) The owner or operator shall comply with the requirements in paragraphs (b)(3) through (9) of this section and shall operate and maintain one of the emission control techniques listed in paragraphs (b)(2)(i) through (iii) of this section.

(i) A fixed roof and a closed-vent system that routes the organic HAP vapors vented from the wastewater tank to a control device; or

(ii) A fixed roof and an internal floating roof that meets the requirements specified in § 63.119(b), with the differences noted in § 63.1257(c)(3)(i) through (iii) for the purposes of this subpart; or

(iii) An external floating roof that meets the requirements specified in §§ 63.119(c), 63.120(b)(5), and 63.120(b)(6), with the differences noted in § 63.1257(c)(3)(i) through (v) for the purposes of this subpart.

(3) If the owner or operator elects to comply with the requirements of paragraph (b)(2)(i) of this section, the fixed roof shall meet the requirements of paragraph (b)(3)(i) of this section, the control device shall meet the requirements of paragraph (b)(3)(ii) of this section, and the closed-vent system shall meet the requirements of paragraph (b)(3)(iii) of this section.

(i) The fixed roof shall meet the following requirements:

(A) Except as provided in paragraph (b)(3)(iv) of this section, the fixed roof and all openings (e.g., access hatches, sampling ports, and gauge wells) shall be maintained in accordance with the requirements specified in § 63.1258(h).

(B) Each opening shall be maintained in a closed position (e.g., covered by a lid) at all times that the wastewater tank contains affected wastewater or residual removed from affected wastewater except when it is necessary to use the opening for wastewater sampling, removal, or for equipment inspection, maintenance, or repair.

(ii) The control device shall be designed, operated, and inspected in accordance with the requirements of paragraph (h) of this section.

(iii) Except as provided in paragraph (b)(3)(iv) of this section, the closed-vent system shall be inspected in accordance with the requirements of § 63.1258(h).

(iv) For any fixed roof tank and closed-vent system that is operated and maintained under negative pressure, the owner or operator is not required to comply with the requirements specified in § 63.1258(h).

(4) If the owner or operator elects to comply with the requirements of paragraph (b)(2)(ii) of this section, the floating roof shall be inspected according to the procedures specified in § 63.120(a)(2) and (3), with the differences noted in § 63.1257(c)(3)(iv) for the purposes of this subpart.

(5) Except as provided in paragraph (b)(6) of this section, if the owner or operator elects to comply with the requirements of paragraph (b)(2)(iii) of this section, seal gaps shall be measured according to the procedures specified in § 63.120(b)(2)(i) through (b)(4) and the wastewater tank shall be inspected to determine compliance with § 63.120(b)(5) and (6) according to the schedule specified in § 63.120(b)(1)(i) through (iii).

(6) If the owner or operator determines that it is unsafe to perform the seal gap measurements specified in § 63.120(b)(2)(i) through (b)(4) or to inspect the wastewater tank to determine compliance with § 63.120(b)(5) and (6) because the floating roof appears to be structurally unsound and poses an imminent or potential danger to inspecting personnel, the owner or operator shall comply with the requirements in either paragraph (b)(6)(i) or (ii) of this section.

(i) The owner or operator shall measure the seal gaps or inspect the wastewater tank within 30 calendar days of the determination that the floating roof is unsafe.

(ii) The owner or operator shall empty and remove the wastewater tank from service within 45 calendar days of determining that the roof is unsafe. If the wastewater tank cannot be emptied within 45 calendar days, the owner or operator may utilize up to two extensions of up to 30 additional calendar days each. Documentation of a decision to utilize an extension shall include an explanation of why it was unsafe to perform the inspection or seal gap measurement, shall document that alternate storage capacity is unavailable, and shall specify a schedule of actions that will ensure that the wastewater tank will be emptied as soon as possible.

(7) Except as provided in paragraph (b)(6) of this section, each wastewater tank shall be inspected initially, and semiannually thereafter, for improper work practices in accordance with § 63.1258(g). For wastewater tanks, improper work practice includes, but is not limited to, leaving open any access door or other opening when such door or opening is not in use.

(8) Except as provided in paragraph (b)(6) of this section, each wastewater tank shall be inspected for control equipment failures as defined in paragraph (b)(8)(i) of this section according to the schedule in paragraphs (b)(8)(ii) and (iii) of this section in accordance with § 63.1258(g).

(i) Control equipment failures for wastewater tanks include, but are not limited to, the conditions specified in paragraphs (b)(8)(i)(A) through (I) of this section.

(A) The floating roof is not resting on either the surface of the liquid or on the leg supports.

(B) There is stored liquid on the floating roof.

(C) A rim seal is detached from the floating roof.

(D) There are holes, tears, cracks or gaps in the rim seal or seal fabric of the floating roof.

(E) There are visible gaps between the seal of an internal floating roof and the wall of the wastewater tank.

(F) There are gaps between the metallic shoe seal or the liquid mounted primary seal of an external floating roof and the wall of the wastewater tank that exceed 212 square centimeters per meter of tank diameter or the width of any portion of any gap between the primary seal and the tank wall exceeds 3.81 centimeters.

(G) There are gaps between the secondary seal of an external floating roof and the wall of the wastewater tank that exceed 21.2 square centimeters per meter of tank diameter or the width of any portion of any gap between the secondary seal and the tank wall exceeds 1.27 centimeters.

(H) Where a metallic shoe seal is used on an external floating roof, one end of the metallic shoe does not extend into the stored liquid or one end of the metallic shoe does not extend a minimum vertical distance of 61 centimeters above the surface of the stored liquid.

(I) A gasket, joint, lid, cover, or door has a crack or gap, or is broken.

(ii) The owner or operator shall inspect for the control equipment failures in paragraphs (b)(8)(i)(A) through (H) according to the schedule specified in paragraphs (b)(4) and (5) of this section.

(iii) The owner or operator shall inspect for the control equipment failures in paragraph (b)(8)(i)(I) of this section initially, and semiannually thereafter.

(9) Except as provided in paragraph (i) of this section, when an improper work practice or a control equipment failure is identified, first efforts at repair shall be made no later than 5 calendar days after identification and repair shall be completed within 45 calendar days after identification. If a failure that is detected during inspections required by this section cannot be repaired within 45 calendar days and if the tank cannot be emptied within 45 calendar days, the owner or operator may utilize up to two extensions of up to 30 additional calendar days each. Documentation of a decision to utilize an extension shall include a description of the failure, shall document that alternate storage capacity is unavailable, and shall specify a schedule of actions that will ensure that the control

equipment will be repaired or the tank will be emptied as soon as practical.

(c) *Surface impoundments.* For each surface impoundment that receives, manages, or treats affected wastewater or a residual removed from affected wastewater, the owner or operator shall comply with the requirements of paragraphs (c)(1), (2), and (3) of this section.

(1) The owner or operator shall operate and maintain on each surface impoundment either a cover (e.g., air-supported structure or rigid cover) and a closed-vent system that routes the organic hazardous air pollutants vapors vented from the surface impoundment to a control device in accordance with paragraphs (c)(1)(i), (iii), (iv), and (v) of this section, or a floating flexible membrane cover as specified in paragraph (c)(1)(ii) of this section.

(i) The cover and all openings shall meet the following requirements:

(A) Except as provided in paragraph (c)(1)(v) of this section, the cover and all openings (e.g., access hatches, sampling ports, and gauge wells) shall be maintained in accordance with the requirements specified in §63.1258(h).

(B) Each opening shall be maintained in a closed position (e.g., covered by a lid) at all times that affected wastewater or residual removed from affected wastewater is in the surface impoundment except when it is necessary to use the opening for sampling, removal, or for equipment inspection, maintenance, or repair.

(C) The cover shall be used at all times that affected wastewater or residual removed from affected wastewater is in the surface impoundment except during removal of treatment residuals in accordance with 40 CFR 268.4 or closure of the surface impoundment in accordance with 40 CFR 264.228.

(ii) Floating flexible membrane covers shall meet the requirements specified in paragraphs (c)(1)(ii)(A) through (F) of this section.

(A) The floating flexible cover shall be designed to float on the liquid surface during normal operations, and to form a continuous barrier over the entire surface area of the liquid.

(B) The cover shall be fabricated from a synthetic membrane material that is either:

(*1*) High density polyethylene (HDPE) with a thickness no less than 2.5 millimeters (100 mils); or

(*2*) A material or a composite of different materials determined to have both organic permeability properties that are equivalent to those of the material listed in paragraph (c)(1)(ii)(B)(*1*) of this section, and chemical and physical properties that maintain the material integrity for the intended service life of the material.

(C) The cover shall be installed in a manner such that there are no visible cracks, holes, gaps, or other open spaces between cover section seams or between the interface of the cover edge and its foundation mountings.

(D) Except as provided for in paragraph (c)(1)(ii)(E) of this section, each opening in the floating membrane cover shall be equipped with a closure device designed to operate such that when the closure device is secured in the closed position there are no visible cracks, holes, gaps, or other open spaces in the closure device or between the perimeter of the cover opening and the closure device.

(E) The floating membrane cover may be equipped with one or more emergency cover drains for removal of stormwater. Each emergency cover drain shall be equipped with a slotted membrane fabric cover that covers at least 90 percent of the area of the opening or a flexible fabric sleeve seal.

(F) The closure devices shall be made of suitable materials that will minimize exposure of organic HAP to the atmosphere, to the extent practical, and will maintain the integrity of the equipment throughout its intended service life. Factors to be considered in designing the closure devices shall include: the effects of any contact with the liquid and its vapor managed in the surface impoundment; the effects of outdoor exposure to wind, moisture, and sunlight; and the operating practices used for the surface impoundment on which the floating membrane cover is installed.

(G) Whenever affected wastewater or residual from affected wastewater is in the surface impoundment, the floating membrane cover shall float on the liquid and each closure device shall be secured in the closed position. Opening of

closure devices or removal of the cover is allowed to provide access to the surface impoundment for performing routine inspection, maintenance, or other activities needed for normal operations and/or to remove accumulated sludge or other residues from the bottom of surface impoundment. Openings shall be maintained in accordance with § 63.1258(h).

(iii) The control device shall be designed, operated, and inspected in accordance with paragraph (h) of this section.

(iv) Except as provided in paragraph (c)(1)(v) of this section, the closed-vent system shall be inspected in accordance with § 63.1258(h).

(v) For any cover and closed-vent system that is operated and maintained under negative pressure, the owner or operator is not required to comply with the requirements specified in § 63.1258(h).

(2) Each surface impoundment shall be inspected initially, and semiannually thereafter, for improper work practices and control equipment failures in accordance with § 63.1258(g).

(i) For surface impoundments, improper work practice includes, but is not limited to, leaving open any access hatch or other opening when such hatch or opening is not in use.

(ii) For surface impoundments, control equipment failure includes, but is not limited to, any time a joint, lid, cover, or door has a crack or gap, or is broken.

(3) Except as provided in paragraph (i) of this section, when an improper work practice or a control equipment failure is identified, first efforts at repair shall be made no later than 5 calendar days after identification and repair shall be completed within 45 calendar days after identification.

(d) *Containers.* For each container that receives, manages, or treats affected wastewater or a residual removed from affected wastewater, the owner or operator shall comply with the requirements of paragraphs (d)(1) through (5) of this section.

(1) The owner or operator shall operate and maintain a cover on each container used to handle, transfer, or store affected wastewater or a residual removed from affected wastewater in accordance with the following requirements:

(i) Except as provided in paragraph (d)(3)(iv) of this section, if the capacity of the container is greater than 0.42 m^3, the cover and all openings (e.g., bungs, hatches, sampling ports, and pressure relief devices) shall be maintained in accordance with the requirements specified in § 63.1258(h).

(ii) If the capacity of the container is less than or equal to 0.42 m^3, the owner or operator shall comply with either paragraph (d)(1)(ii)(A) or (B) of this section.

(A) The container must meet existing Department of Transportation specifications and testing requirements under 49 CFR part 178; or

(B) Except as provided in paragraph (d)(3)(iv) of this section, the cover and all openings shall be maintained without leaks as specified in § 63.1258(h).

(iii) The cover and all openings shall be maintained in a closed position (e.g., covered by a lid) at all times that affected wastewater or a residual removed from affected wastewater is in the container except when it is necessary to use the opening for filling, removal, inspection, sampling, or pressure relief events related to safety considerations.

(2) *Filling of large containers.* Pumping affected wastewater or a residual removed from affected wastewater into a container with a capacity greater than or equal to 0.42 m^3 shall be conducted in accordance with the conditions in paragraphs (d)(2)(i) and (ii) of this section.

(i) Comply with any one of the procedures specified in paragraph (d)(2)(i)(A), (B), or (C) of this section.

(A) Use a submerged fill pipe. The submerged fill pipe outlet shall extend to no more than 6 inches or within two fill pipe diameters of the bottom of the container while the container is being filled.

(B) Locate the container within an enclosure with a closed-vent system that routes the organic HAP vapors vented from the container to a control device.

(C) Use a closed-vent system to vent the displaced organic vapors vented from the container to a control device

or back to the equipment from which the wastewater is transferred.

(ii) The cover shall remain in place and all openings shall be maintained in a closed position except for those openings required for the submerged fill pipe and for venting of the container to prevent physical damage or permanent deformation of the container or cover.

(3) During treatment of affected wastewater or a residual removed from affected wastewater, including aeration, thermal or other treatment, in a container, whenever it is necessary for the container to be open, the container shall be located within an enclosure with a closed-vent system that routes the organic HAP vapors vented from the container to a control device.

(i) Except as provided in paragraph (d)(3)(iv) of this section, the enclosure and all openings (e.g., doors, hatches) shall be maintained in accordance with the requirements specified in §63.1258(h).

(ii) The control device shall be designed, operated, and inspected in accordance with paragraph (h) of this section.

(iii) Except as provided in paragraph (d)(3)(iv) of this section, the closed-vent system shall be inspected in accordance with §63.1258(h).

(iv) For any enclosure and closed-vent system that is operated and maintained under negative pressure, the owner or operator is not required to comply with the requirements specified in §63.1258(h).

(4) Each container shall be inspected initially, and semiannually thereafter, for improper work practices and control equipment failures in accordance with §63.1258(g).

(i) For containers, improper work practice includes, but is not limited to, leaving open any access hatch or other opening when such hatch or opening is not in use.

(ii) For containers, control equipment failure includes, but is not limited to, any time a cover or door has a gap or crack, or is broken.

(5) Except as provided in paragraph (i) of this section, when an improper work practice or a control equipment failure is identified, first efforts at repair shall be made no later than 5 calendar days after identification and repair shall be completed within 15 calendar days after identification.

(e) *Individual drain systems.* For each individual drain system that receives or manages affected wastewater or a residual removed from affected wastewater, the owner or operator shall comply with the requirements of paragraphs (e) (1), (2), and (3) or with paragraphs (e) (4), (5), and (6) of this section.

(1) If the owner or operator elects to comply with this paragraph, the owner or operator shall operate and maintain on each opening in the individual drain system a cover and if vented, route the vapors to a process or through a closed-vent system to a control device. The owner or operator shall comply with the requirements of paragraphs (e)(1) (i) through (v) of this section.

(i) The cover and all openings shall meet the following requirements:

(A) Except as provided in paragraph (e)(1)(iv) of this section, the cover and all openings (e.g., access hatches, sampling ports) shall be maintained in accordance with the requirements specified in §63.1258(h).

(B) The cover and all openings shall be maintained in a closed position at all times that affected wastewater or a residual removed from affected wastewater is in the drain system except when it is necessary to use the opening for sampling or removal, or for equipment inspection, maintenance, or repair.

(ii) The control device shall be designed, operated, and inspected in accordance with paragraph (h) of this section.

(iii) Except as provided in paragraph (e)(1)(iv) of this section, the closed-vent system shall be inspected in accordance with §63.1258(h).

(iv) For any cover and closed-vent system that is operated and maintained under negative pressure, the owner or operator is not required to comply with the requirements specified in §63.1258(h).

(v) The individual drain system shall be designed and operated to segregate the vapors within the system from other drain systems and the atmosphere.

(2) Each individual drain system shall be inspected initially, and semi-annually thereafter, for improper work practices and control equipment failures, in accordance with § 63.1258(g).

(i) For individual drain systems, improper work practice includes, but is not limited to, leaving open any access hatch or other opening when such hatch or opening is not in use for sampling or removal, or for equipment inspection, maintenance, or repair.

(ii) For individual drain systems, control equipment failure includes, but is not limited to, any time a joint, lid, cover, or door has a gap or crack, or is broken.

(3) Except as provided in paragraph (i) of this section, when an improper work practice or a control equipment failure is identified, first efforts at repair shall be made no later than 5 calendar days after identification and repair shall be completed within 15 calendar days after identification.

(4) If the owner or operator elects to comply with this paragraph, the owner or operator shall comply with the requirements in paragraphs (e)(4) (i) through (iii) of this section:

(i) Each drain shall be equipped with water seal controls or a tightly fitting cap or plug. The owner or operator shall comply with paragraphs (e)(4)(i)(A) and (B) of this section.

(A) For each drain equipped with a water seal, the owner or operator shall ensure that the water seal is maintained. For example, a flow-monitoring device indicating positive flow from a main to a branch water line supplying a trap or water being continuously dripped into the trap by a hose could be used to verify flow of water to the trap. Visual observation is also an acceptable alternative.

(B) If a water seal is used on a drain receiving affected wastewater, the owner or operator shall either extend the pipe discharging the wastewater below the liquid surface in the water seal of the receiving drain, or install a flexible shield (or other enclosure which restricts wind motion across the open area between the pipe and the drain) that encloses the space between the pipe discharging the wastewater to the drain receiving the wastewater. (Water seals which are used on hubs receiving wastewater that is not subject to the provisions of this subpart for the purpose of eliminating cross ventilation to drains carrying affected wastewater are not required to have a flexible shield or extended subsurface discharging pipe.)

(ii) Each junction box shall be equipped with a tightly fitting solid cover (i.e., no visible gaps, cracks, or holes) which shall be kept in place at all times except during inspection and maintenance. If the junction box is vented, the owner or operator shall comply with the requirements in paragraph (e)(4)(ii) (A) or (B) of this section.

(A) The junction box shall be vented to a process or through a closed-vent system to a control device. The closed-vent system shall be inspected in accordance with the requirements of § 63.1258(h) and the control device shall be designed, operated, and inspected in accordance with the requirements of paragraph (h) of this section.

(B) If the junction box is filled and emptied by gravity flow (i.e., there is no pump) or is operated with no more than slight fluctuations in the liquid level, the owner or operator may vent the junction box to the atmosphere provided that the junction box complies with the requirements in paragraphs (e)(4)(ii)(B) (*1*) and (*2*) of this section.

(*1*) The vent pipe shall be at least 90 centimeters in length and no greater than 10.2 centimeters in nominal inside diameter.

(*2*) Water seals shall be installed and maintained at the wastewater entrance(s) to or exit from the junction box restricting ventilation in the individual drain system and between components in the individual drain system. The owner or operator shall demonstrate (e.g., by visual inspection or smoke test) upon request by the Administrator that the junction box water seal is properly designed and restricts ventilation.

(iii) The owner or operator shall operate and maintain sewer lines as specified in paragraphs (e)(4)(iii)(A) and (B) of this section.

(A) Except as specified in paragraph (e)(4)(iii)(B) of this section, each sewer

line shall not be open to the atmosphere and shall be covered or enclosed in a manner so as to have no visible gaps or cracks in joints, seals, or other emission interfaces.

NOTE: This provision applies to sewers located inside and outside of buildings.

(B) A sewer line connected to drains that are in compliance with paragraph (e)(4)(i) of this section may be vented to the atmosphere, provided that the sewer line entrance to the first downstream junction box is water sealed and the sewer line vent pipe is designed as specified in paragraph (e)(4)(ii)(B)(*1*) of this section.

(5) Equipment used to comply with paragraphs (e)(4) (i), (ii), or (iii) of this section shall be inspected as follows:

(i) Each drain using a tightly fitting cap or plug shall be visually inspected initially, and semiannually thereafter, to ensure caps or plugs are in place and that there are no gaps, cracks, or other holes in the cap or plug.

(ii) Each junction box shall be visually inspected initially, and semiannually thereafter, to ensure that there are no gaps, cracks, or other holes in the cover.

(iii) The unburied portion of each sewer line shall be visually inspected initially, and semiannually thereafter, for indication of cracks or gaps that could result in air emissions.

(6) Except as provided in paragraph (i) of this section, when a gap, hole, or crack is identified in a joint or cover, first efforts at repair shall be made no later than 5 calendar days after identification, and repair shall be completed within 15 calendar days after identification.

(f) *Oil-water separators*. For each oil-water separator that receives, manages, or treats affected wastewater or a residual removed from affected wastewater, the owner or operator shall comply with the requirements of paragraphs (f)(1) through (6) of this section.

(1) The owner or operator shall maintain one of the following:

(i) A fixed roof and a closed-vent system that routes the organic HAP vapors vented from the oil-water separator to a control device. The fixed roof, closed-vent system, and control device shall meet the requirements specified in paragraph (f)(2) of this section;

(ii) A floating roof that meets the requirements in 40 CFR 60.693–2(a)(1)(i), (a)(1)(ii), (a)(2), (a)(3), and (a)(4). For portions of the oil-water separator where it is infeasible to construct and operate a floating roof, such as over the weir mechanism, the owner or operator shall operate and maintain a fixed roof, closed-vent system, and control device that meet the requirements specified in paragraph (f)(2) of this section.

(2) A fixed roof shall meet the requirements of paragraph (f)(2)(i) of this section, a control device shall meet the requirements of paragraph (f)(2)(ii) of this section, and a closed-vent system shall meet the requirements of (f)(2)(iii) of this section.

(i) The fixed roof shall meet the following requirements:

(A) Except as provided in (f)(2)(iv) of this section, the fixed roof and all openings (e.g., access hatches, sampling ports, and gauge wells) shall be maintained in accordance with the requirements specified in §63.1258(h).

(B) Each opening shall be maintained in a closed, sealed position (e.g., covered by a lid that is gasketed and latched) at all times that the oil-water separator contains affected wastewater or a residual removed from affected wastewater except when it is necessary to use the opening for sampling or removal, or for equipment inspection, maintenance, or repair.

(ii) The control device shall be designed, operated, and inspected in accordance with the requirements of paragraph (h) of this section.

(iii) Except as provided in paragraph (f)(2)(iv) of this section, the closed-vent system shall be inspected in accordance with the requirements of §63.1258(h).

(iv) For any fixed-roof and closed-vent system that is operated and maintained under negative pressure, the owner or operator is not required to comply with the requirements of §63.1258(h).

(3) If the owner or operator elects to comply with the requirements of paragraph (f)(1)(ii) of this section, seal gaps shall be measured according to the procedures specified in 40 CFR part 60,

subpart QQQ § 60.696(d)(1) and the schedule specified in paragraphs (f)(3)(i) and (ii) of this section.

(i) Measurement of primary seal gaps shall be performed within 60 calendar days after installation of the floating roof and introduction of affected wastewater or a residual removed from affected wastewater and once every 5 years thereafter.

(ii) Measurement of secondary seal gaps shall be performed within 60 calendar days after installation of the floating roof and introduction of affected wastewater or a residual removed from affected wastewater and once every year thereafter.

(4) Each oil-water separator shall be inspected initially, and semiannually thereafter, for improper work practices in accordance with § 63.1258(g). For oil-water separators, improper work practice includes, but is not limited to, leaving open or ungasketed any access door or other opening when such door or opening is not in use.

(5) Each oil-water separator shall be inspected for control equipment failures as defined in paragraph (f)(5)(i) of this section according to the schedule specified in paragraphs (f)(5)(ii) and (iii) of this section.

(i) For oil-water separators, control equipment failure includes, but is not limited to, the conditions specified in paragraphs (f)(5)(i)(A) through (G) of this section.

(A) The floating roof is not resting on either the surface of the liquid or on the leg supports.

(B) There is stored liquid on the floating roof.

(C) A rim seal is detached from the floating roof.

(D) There are holes, tears, or other open spaces in the rim seal or seal fabric of the floating roof.

(E) There are gaps between the primary seal and the separator wall that exceed 67 square centimeters per meter of separator wall perimeter or the width of any portion of any gap between the primary seal and the separator wall exceeds 3.8 centimeters.

(F) There are gaps between the secondary seal and the separator wall that exceed 6.7 square centimeters per meter of separator wall perimeter or the width of any portion of any gap between the secondary seal and the separator wall exceeds 1.3 centimeters.

(G) A gasket, joint, lid, cover, or door has a gap or crack, or is broken.

(ii) The owner or operator shall inspect for the control equipment failures in paragraphs (f)(5)(i)(A) through (F) according to the schedule specified in paragraph (f)(3) of this section.

(iii) The owner or operator shall inspect for control equipment failures in paragraph (f)(5)(i)(G) of this section initially, and semiannually thereafter.

(6) Except as provided in paragraph (i) of this section, when an improper work practice or a control equipment failure is identified, first efforts at repair shall be made no later than 5 calendar days after identification and repair shall be completed within 45 calendar days after identification.

(g) *Performance standards for treatment processes managing wastewater and/or residuals removed from wastewater*. This section specifies the performance standards for treating affected wastewater. The owner or operator shall comply with the requirements as specified in paragraphs (g)(1) through (6) of this section. Where multiple compliance options are provided, the options may be used in combination for different wastewater and/or for different compounds (e.g., soluble versus partially soluble compounds) in the same wastewater, except where otherwise provided in this section. Once affected wastewater or a residual removed from affected wastewater has been treated in accordance with this subpart, it is no longer subject to the requirements of this subpart.

(1) *Existing source*. For a wastewater stream at an existing source that exceeds or is designated to exceed the concentration and load criteria in paragraph (a)(1)(i)(A) of this section, the owner or operator shall comply with a control option in paragraph (g)(8) of this section. For a wastewater stream at an existing source that exceeds the concentration and load criteria in either paragraph (a)(1)(i)(B) or (C) of this section, the owner or operator shall comply with a control option in paragraph (g)(8) of this section and a control option in paragraph (g)(9) of this section. As an alternative to the control options in paragraphs (g)(8) and

(g)(9) of this section, the owner or operator may comply with a control option in either paragraph (g)(10), (11) or (13) of this section, as applicable.

(2) *New source.* For a wastewater stream at a new source that exceeds or is designated to exceed the concentration and load criteria in paragraph (a)(1)(i)(A) of this section, the owner or operator shall comply with a control option in paragraph (g)(8) of this section. For wastewater at a new source that exceeds the concentration and load criteria in either paragraph (a)(1)(i)(B) or (C) of this section, but does not exceed the criteria in paragraph (a)(1)(i)(D) of this section, the owner or operator shall comply with a control option in paragraph (g)(8) of this section and a control option in paragraph (g)(9) of this section. As an alternative to the control options in paragraphs (g)(8) and/or (9) of this section, the owner or operator may comply with a control option in either paragraph (g)(10), (11), or (13) of this section, as applicable. For a wastewater stream at a new source that exceeds or is designated to exceed the concentration and load criteria in paragraph (a)(1)(i)(D) of this section, the owner or operator shall comply with a control option in paragraph (g)(12) or (13) of this section.

(3) *Biological treatment processes.* Biological treatment processes in compliance with this section may be either open or closed biological treatment processes as defined in §63.1251. An open biological treatment process in compliance with this section need not be covered and vented to a control device. An open or a closed biological treatment process in compliance with this section and using §63.1257(e)(2)(iii)(E) or (F) to demonstrate compliance is not subject to the requirements of paragraphs (b) and (c) of this section. A closed biological treatment process in compliance with this section and using §63.1257(e)(2)(iii)(G) to demonstrate compliance shall comply with the requirements of paragraphs (b) and (c) of this section. Waste management units upstream of an open or closed biological treatment process shall meet the requirements of paragraphs (b) through (f) of this section, as applicable.

(4) *Performance tests and design evaluations.* If the Resource Conservation and Recovery Act (RCRA) option [paragraph (g)(13) of this section] or the enhanced biological treatment process for soluble HAP compounds option [paragraph (g)(10) of this section] is selected to comply with this section, neither a design evaluation nor a performance test is required. For any other nonbiological treatment process, and for closed biological treatment processes as defined in §63.1251, the owner or operator shall conduct either a design evaluation as specified in §63.1257(e)(2)(ii) or performance test as specified in §63.1257(e)(2)(iii). For each open biological treatment process as defined in §63.1251, the owner or operator shall conduct a performance test as specified in §63.1257(e)(2)(iii)(E) or (F).

(5) *Control device requirements.* When gases are vented from the treatment process, the owner or operator shall comply with the applicable control device requirements specified in paragraph (h) of this section and §63.1257(e)(3), and the applicable leak inspection provisions specified in §63.1258(h). This requirement is in addition to the requirements for treatment systems specified in paragraphs (g)(8) through (14) of this section. This requirement does not apply to any open biological treatment process that meets the mass removal requirements.

(6) *Residuals: general.* When residuals result from treating affected wastewater, the owner or operator shall comply with the requirements for residuals specified in paragraph (g)(14) of this section.

(7) *Treatment using a series of treatment processes.* In all cases where the wastewater provisions in this subpart allow or require the use of a treatment process or control device to comply with emissions limitations, the owner or operator may use multiple treatment processes or control devices, respectively. For combinations of treatment processes where the wastewater stream is conveyed by hard-piping, the owner or operator shall comply with either the requirements of paragraph (g)(7)(i) or (ii) of this section. For combinations of treatment processes where the wastewater stream is not conveyed

by hard-piping, the owner or operator shall comply with the requirements of paragraph (g)(7)(ii) of this section. For combinations of control devices, the owner or operator shall comply with the requirements of paragraph (g)(7)(i) of this section.

(i) *Compliance across the combination of all treatment units or control devices in series.* (A) For combinations of treatment processes, the wastewater stream shall be conveyed by hard-piping between the treatment processes. For combinations of control devices, the vented gas stream shall be conveyed by hard-piping between the control devices.

(B) For combinations of treatment processes, each treatment process shall meet the applicable requirements of paragraphs (b) through (f) of this section, except as provided in paragraph (g)(3) of this section.

(C) The owner or operator shall identify, and keep a record of, the combination of treatment processes or of control devices, including identification of the first and last treatment process or control device. The owner or operator shall include this information as part of the treatment process description reported in the Notification of Compliance Status.

(D) The performance test or design evaluation shall determine compliance across the combination of treatment processes or control devices. If a performance test is conducted, the ''inlet'' shall be the point at which the wastewater stream or residual enters the first treatment process, or the vented gas stream enters the first control device. The ''outlet'' shall be the point at which the treated wastewater stream exits the last treatment process, or the vented gas stream exits the last control device.

(ii) *Compliance across individual units.* (A) For combinations of treatment processes, each treatment process shall meet the applicable requirements of paragraphs (b) through (f) of this section except as provided in paragraph (g)(3) of this section.

(B) The owner or operator shall identify, and keep a record of, the combination of treatment processes, including identification of the first and last treatment process. The owner or operator shall include this information as part of the treatment process description reported in the Notification of Compliance Status report.

(C) The owner or operator shall determine the mass removed or destroyed by each treatment process. The performance test or design evaluation shall determine compliance for the combination of treatment processes by adding together the mass removed or destroyed by each treatment process and determine the overall control efficiency of the treatment system.

(8) *Control options: Wastewater containing partially soluble HAP compounds.* The owner or operator shall comply with either paragraph (g)(8)(i) or (ii) of this section for the control of partially soluble HAP compounds at new or existing sources.

(i) *50 ppmw concentration option.* The owner or operator shall comply with paragraphs (g)(8)(i)(A) and (B) of this section.

(A) Reduce, by removal or destruction, the concentration of total partially soluble HAP compounds to a level less than 50 ppmw as determined by the procedures specified in § 63.1257(e)(2)(iii)(B).

(B) This option shall not be used when the treatment process is a biological treatment process. This option shall not be used when the wastewater is designated as an affected wastewater as specified in paragraph (a)(1)(ii) of this section. Dilution shall not be used to achieve compliance with this option.

(ii) *Percent mass removal/destruction option.* The owner or operator shall reduce, by removal or destruction, the mass of total partially soluble HAP compounds by 99 percent or more. The removal destruction efficiency shall be determined by the procedures specified in § 63.1257(e)(2)(ii) or (iii)(C) for noncombustion, nonbiological treatment processes; § 63.1257(e)(2)(ii) or (iii)(D) for combustion processes; § 63.1257(e)(2)(iii)(F) for open biological treatment processes; and § 63.1257(e)(2)(ii) or (iii)(G) for closed biological treatment processes.

(9) *Control options: Wastewater containing soluble HAP compounds.* The owner or operator shall comply with either paragraph (g)(9)(i) or (ii) of this

section for the control of soluble HAP compounds at new or existing sources.

(i) *520 ppmw concentration option*. The owner or operator shall comply with paragraphs (g)(9)(i)(A) and (B) of this section.

(A) Reduce, by removal or destruction, the concentration of total soluble HAP compounds to a level less than 520 ppmw as determined in the procedures specified in §63.1257(e)(2)(iii)(B).

(B) This option shall not be used when the treatment process is a biological treatment process. This option shall not be used when the wastewater is designated as an affected wastewater as specified in paragraph (a)(1)(ii) of this section. Dilution shall not be used to achieve compliance with this option.

(ii) *Percent mass removal/destruction option*. The owner or operator shall reduce the mass of total soluble HAP by 90 percent or more, either by removal or destruction. The removal/destruction efficiency shall be determined by the procedures in §63.1257(e)(2)(ii) or (e)(2)(iii)(C) for noncombustion, nonbiological treatment processes; §63.1257(e)(2)(ii) or (e)(2)(iii)(D) for combustion processes; §63.1257(e)(2)(iii)(F) for open biological treatment processes; and §63.1257(e)(2)(ii) or (e)(2)(iii)(G) for closed, biological treatment processes.

(10) *Control option: Enhanced biotreatment for wastewater containing soluble HAP*. The owner or operator may elect to treat affected wastewater streams containing soluble HAP in an enhanced biological treatment system, as defined in §63.1251, provided the wastewater stream contains less than 50 ppmw partially soluble HAP, or the owner or operator complies with the requirements of paragraph (g)(8) of this section before treating the affected wastewater stream in the enhanced biological treatment system.This option shall not be used when the wastewater is designated as an affected wastewater as specified in paragraph (a)(1)(ii) of this section. These treatment processes are exempt from the design evaluation or performance tests requirements specified in paragraph (g)(4) of this section.

(11) *95-percent mass reduction option, for biological treatment processes*. The owner or operator of a new or existing source using biological treatment for any affected wastewater shall reduce the mass of total soluble and partially soluble HAP sent to that biological treatment unit by at least 95 percent. All wastewater as defined in §63.1251 entering such a biological treatment unit from PMPU's subject to this subpart shall be included in the demonstration of the 95-percent mass removal. The owner or operator shall comply with paragraphs (g)(11)(i) through (iv) of this section.

(i) Except as provided in paragraph (g)(11)(iv) of this section, the owner or operator shall ensure that all wastewater from PMPU's subject to this subpart entering a biological treatment unit are treated to destroy at least 95-percent total mass of all soluble and partially soluble HAP compounds.

(ii) For open biological treatment processes, compliance shall be determined using the procedures specified in §63.1257(e)(2)(iii)(E). For closed aerobic biological treatment processes, compliance shall be determined using the procedures specified in §63.1257(e)(2)(ii), (iii)(E), or (iii)(G). For closed anaerobic biological treatment processes, compliance shall be determined using the procedures specified in §63.1257(e)(2)(ii) or (iii)(G).

(iii) For each treatment process or waste management unit that receives, manages, or treats wastewater subject to this paragraph, from the POD to the biological treatment unit, the owner or operator shall comply with paragraphs (b) through (f) of this section for control of air emissions. When complying with this paragraph, the term affected wastewater in paragraphs (b) through (f) of this section shall mean all wastewater from PMPU's, not just affected wastewater.

(iv) If wastewater is in compliance with the requirements in paragraph (g)(8), (9), or (12) of this section before entering the biological treatment unit, the hazardous air pollutants mass of that wastewater is not required to be included in the total mass flow rate entering the biological treatment unit for the purpose of demonstrating compliance.

(12) *Percent mass removal/destruction option for soluble HAP compounds at new sources*. The owner or operator of a new

source shall reduce, by removal or destruction, the mass flow rate of total soluble HAP from affected wastewater by 99 percent or more. The removal/destruction efficiency shall be determined by the procedures in § 63.1257(e)(2)(ii) or (iii)(C) for noncombustion, nonbiological treatment processes; § 63.1257(e)(2)(ii) and (iii)(D) for combustion processes; § 63.1257(e)(2)(iii)(F) for open biological treatment processes; and § 63.1257(e)(2)(ii) or (iii)(G) for closed biological treatment processes.

(13) *Treatment in a RCRA unit option.* The owner or operator shall treat the affected wastewater or residual in a unit identified in, and complying with, paragraph (g)(13)(i), (ii), or (iii) of this section. These units are exempt from the design evaluation or performance tests requirements specified in paragraph (g)(4) of this section and § 63.1257(e)(2), and from the monitoring requirements specified in paragraph (a)(2)(iii) of this section, as well as recordkeeping and reporting requirements associated with monitoring and performance tests.

(i) The wastewater or residual is discharged to a hazardous waste incinerator for which the owner or operator has been issued a final permit under 40 CFR part 270 and complies with the requirements of 40 CFR part 264, subpart O, or has certified compliance with the interim status requirements of 40 CFR part 265, subpart O;

(ii) The wastewater or residual is discharged to a process heater or boiler burning hazardous waste for which the owner or operator:

(A) Has been issued a final permit under 40 CFR part 270 and complies with the requirements of 40 CFR part 266, subpart H; or

(B) Has certified compliance with the interim status requirements of 40 CFR part 266, subpart H.

(iii) The wastewater or residual is discharged to an underground injection well for which the owner or operator has been issued a final permit under 40 CFR part 270 or 40 CFR part 144 and complies with the requirements of 40 CFR part 122. The owner or operator shall comply with all applicable requirements of this subpart prior to the point where the wastewater enters the underground portion of the injection well.

(14) *Residuals.* For each residual removed from affected wastewater, the owner or operator shall control for air emissions by complying with paragraphs (b) through (f) of this section and by complying with one of the provisions in paragraphs (g)(14)(i) through (iv) of this section.

(i) Recycle the residual to a production process or sell the residual for the purpose of recycling. Once a residual is returned to a production process, the residual is no longer subject to this section.

(ii) Return the residual to the treatment process.

(iii) Treat the residual to destroy the total combined mass flow rate of soluble and/or partially soluble HAP compounds by 99 percent or more, as determined by the procedures specified in § 63.1257(e)(2)(iii)(C) or (D).

(iv) Comply with the requirements for RCRA treatment options specified in paragraph (g)(13) of this section.

(h) *Control devices.* For each control device or combination of control devices used to comply with the provisions in paragraphs (b) through (f) and (g)(5) of this section, the owner or operator shall operate and maintain the control device or combination of control devices in accordance with the requirements of paragraphs (h)(1) through (5) of this section.

(1) Whenever organic HAP emissions are vented to a control device which is used to comply with the provisions of this subpart, such control device shall be operating.

(2) The control device shall be designed and operated in accordance with paragraph (h)(2) (i), (ii), (iii), (iv), or (v) of this section, as demonstrated by the provisions in § 63.1257(e)(3).

(i) An enclosed combustion device (including but not limited to a vapor incinerator, boiler, or process heater) shall meet the conditions in paragraph (h)(2)(i) (A), (B), or (C) of this section, alone or in combination with other control devices. If a boiler or process heater is used as the control device, then the vent stream shall be introduced into the flame zone of the boiler or process heater.

(A) Reduce the organic HAP emissions vented to the control device by 95 percent by weight or greater;

(B) Achieve an outlet TOC concentration of 20 ppmv on a dry basis corrected to 3 percent oxygen. The owner or operator shall use either Method 18 of 40 CFR part 60, appendix A, or any other method or data that has been validated according to the applicable procedures in Method 301 of appendix A of this part; or

(C) Provide a minimum residence time of 0.5 seconds at a minimum temperature of 760 °C.

(ii) A vapor recovery system (including but not limited to a carbon adsorption system or condenser), alone or in combination with other control devices, shall reduce the organic HAP emissions vented to the control device by 95 percent by weight or greater or achieve an outlet TOC concentration of 20 ppmv. The 20 ppmv performance standard is not applicable to compliance with the provisions of paragraphs (c) or (d) of this section.

(iii) A flare shall comply with the requirements of §63.11(b).

(iv) A scrubber, alone or in combination with other control devices, shall reduce the organic HAP emissions in such a manner that 95 weight-percent is either removed, or destroyed by chemical reaction with the scrubbing liquid, or achieve an outlet TOC concentration of 20 ppmv. The 20 ppmv performance standard is not applicable to compliance with the provisions of paragraphs (c) or (d) of this section.

(v) Any other control device used shall, alone or in combination with other control devices, reduce the organic HAP emissions vented to the control device by 95 percent by weight or greater or achieve an outlet TOC concentration of 20 ppmv. The 20 ppmv performance standard is not applicable to compliance with the provisions of paragraphs (c) or (d) of this section.

(3) If the control device is a combustion device, the owner or operator shall comply with the requirements in §63.1252(g) to control halogenated vent streams.

(4) Except as provided in paragraph (i) of this section, if gaps, cracks, tears, or holes are observed in ductwork, piping, or connections to covers and control devices during an inspection, a first effort to repair shall be made as soon as practical but no later than 5 calendar days after identification. Repair shall be completed no later than 15 calendar days after identification or discovery of the defect.

(5) The provisions in paragraphs (h)(1) through (4) of this section apply at all times, except as specified in §63.1250(g). The owner or operator may not comply with the planned routine maintenance provisions in §63.1252(h) for vent streams from waste management units.

(i) *Delay of repair*. Delay of repair of equipment for which a control equipment failure or a gap, crack, tear, or hole has been identified, is allowed if the repair is technically infeasible without a shutdown, as defined in §63.1251, or if the owner or operator determines that emissions of purged material from immediate repair would be greater than the emissions likely to result from delay of repair. Repair of this equipment shall occur by the end of the next shutdown.

(1) Delay of repair of equipment for which a control equipment failure or a gap, crack, tear, or hole has been identified, is allowed if the equipment is emptied or is no longer used to treat or manage affected wastewater or residuals removed from affected wastewater.

(2) Delay of repair of equipment for which a control equipment failure or a gap, crack, tear, or hole has been identified is also allowed if additional time is necessary due to the unavailability of parts beyond the control of the owner or operator. Repair shall be completed as soon as practical. The owner or operator who uses this provision shall comply with the requirements of §63.1259(h) to document the reasons that the delay of repair was necessary.

[63 FR 50326, Sept. 21, 1998, as amended at 65 FR 52607, Aug. 29, 2000; 66 FR 40133, Aug. 2, 2001]

§63.1257 Test methods and compliance procedures.

(a) *General*. Except as specified in paragraph (a)(5) of this section, the procedures specified in paragraphs (c), (d), (e), and (f) of this section are required to demonstrate initial compliance with §§63.1253, 63.1254, 63.1256, and

63.1252(e), respectively. The provisions in paragraphs (a) (2) through (3) apply to performance tests that are specified in paragraphs (c), (d), and (e) of this section. The provisions in paragraph (a)(5) of this section are used to demonstrate initial compliance with the alternative standards specified in §§ 63.1253(d) and 63.1254(c). The provisions in paragraph (a)(6) of this section are used to comply with the outlet concentration requirements specified in §§ 63.1253(c), 63.1254 (a)(2)(i) and (a)(3)(ii)(B), 63.1254(b)(i) and 63.1256(h)(2).

(1) *Design evaluation*. To demonstrate that a control device meets the required control efficiency, a design evaluation must address the composition and organic HAP concentration of the vent stream entering the control device. A design evaluation also must address other vent stream characteristics and control device operating parameters as specified in any one of paragraphs (a)(1) (i) through (vi) of this section, depending on the type of control device that is used. If the vent stream is not the only inlet to the control device, the efficiency demonstration also must consider all other vapors, gases, and liquids, other than fuels, received by the control device.

(i) For an enclosed combustion device used to comply with the provisions of 63.1253 (b)(2) or (c)(2), or 63.1256(h)(2)(i)(C) with a minimum residence time of 0.5 seconds and a minimum temperature of 760 °C, the design evaluation must document that these conditions exist.

(ii) For a combustion control device that does not satisfy the criteria in paragraph (a)(1)(i) of this section, the design evaluation must document control efficiency and address the following characteristics, depending on the type of control device:

(A) For a thermal vapor incinerator, the design evaluation must consider the autoignition temperature of the organic HAP, must consider the vent stream flow rate, and must establish the design minimum and average temperature in the combustion zone and the combustion zone residence time.

(B) For a catalytic vapor incinerator, the design evaluation shall consider the vent stream flow rate and shall establish the design minimum and average temperatures across the catalyst bed inlet and outlet.

(C) For a boiler or process heater, the design evaluation shall consider the vent stream flow rate; shall establish the design minimum and average flame zone temperatures and combustion zone residence time; and shall describe the method and location where the vent stream is introduced into the flame zone.

(iii) For a condenser, the design evaluation shall consider the vent stream flow rate, relative humidity, and temperature and shall establish the design outlet organic HAP compound concentration level, design average temperature of the condenser exhaust vent stream, and the design average temperatures of the coolant fluid at the condenser inlet and outlet. The temperature of the gas stream exiting the condenser must be measured and used to establish the outlet organic HAP concentration.

(iv) For a carbon adsorption system that regenerates the carbon bed directly onsite in the control device such as a fixed-bed adsorber, the design evaluation shall consider the vent stream flow rate, relative humidity, and temperature and shall establish the design exhaust vent stream organic compound concentration level, adsorption cycle time, number and capacity of carbon beds, type and working capacity of activated carbon used for carbon beds, design total regeneration stream mass or volumetric flow over the period of each complete carbon bed regeneration cycle, design carbon bed temperature after regeneration, design carbon bed regeneration time, and design service life of carbon. For vacuum desorption, the pressure drop shall be included.

(v) For a carbon adsorption system that does not regenerate the carbon bed directly onsite in the control device such as a carbon canister, the design evaluation shall consider the vent stream mass or volumetric flow rate, relative humidity, and temperature and shall establish the design exhaust vent stream organic compound concentration level, capacity of carbon bed, type and working capacity of activated carbon used for carbon bed, and

design carbon replacement interval based on the total carbon working capacity of the control device and source operating schedule.

(vi) For a scrubber, the design evaluation shall consider the vent stream composition; constituent concentrations; liquid-to-vapor ratio; scrubbing liquid flow rate and concentration; temperature; and the reaction kinetics of the constituents with the scrubbing liquid. The design evaluation shall establish the design exhaust vent stream organic compound concentration level and will include the additional information in paragraphs (a)(1)(vi)(A) and (B) of this section for trays and a packed column scrubber.

(A) Type and total number of theoretical and actual trays;

(B) Type and total surface area of packing for entire column, and for individual packed sections if column contains more than one packed section.

(2) *Calculation of TOC or total organic HAP concentration.* The TOC concentration or total organic HAP concentration is the sum of the concentrations of the individual components. If compliance is being determined based on TOC, the owner or operator shall compute TOC for each run using Equation 6 of this subpart. If compliance with the wastewater provisions is being determined based on total organic HAP, the owner or operator shall compute total organic HAP using Equation 6 of this subpart, except that only the organic HAP compounds shall be summed; when determining compliance with paragraph (e)(3)(i) of this section, only the soluble and partially soluble HAP compounds shall be summed.

$$CG_T = \frac{1}{m}\sum_{j=1}^{m}\left(\sum_{i=1}^{n} CGS_{i,j}\right) \qquad \text{(Eq. 6)}$$

where:

CG_T=total concentration of TOC in vented gas stream, average of samples, dry basis, ppmv

$CGS_{i,j}$=concentration of sample components in vented gas stream for sample j, dry basis, ppmv

i=identifier for a compound

n=number of components in the sample

j=identifier for a sample

m=number of samples in the sample run

(3) *Outlet concentration correction for supplemental gases.* (i) *Combustion devices.* Except as provided in §63.1258(b)(5)(ii)(A), for a combustion device used to comply with an outlet concentration standard, the actual TOC, organic HAP, and hydrogen halide and halogen must be corrected to 3 percent oxygen if supplemental gases, as defined in §63.1251, are added to the vent stream or manifold. The integrated sampling and analysis procedures of Method 3B of 40 CFR part 60, appendix A, shall be used to determine the actual oxygen concentration ($\%O_{2d}$). The samples shall be taken during the same time that the TOC or total organic HAP or hydrogen halides and halogen samples are taken. The concentration corrected to 3 percent oxygen (C_d) shall be computed using Equation 7A of this subpart:

$$C_c = C_m\left(\frac{17.9}{20.9 - \%O_{2d}}\right) \qquad \text{(Eq. 7A)}$$

Where:

C_c = concentration of TOC or total organic HAP or hydrogen halide and halogen corrected to 3 percent oxygen, dry basis, ppmv

C_m = total concentration of TOC or total organic HAP or hydrogen halide and halogen in vented gas stream, average of samples, dry basis, ppmv

$\%O_{2d}$ = concentration of oxygen measured in vented gas stream, dry basis, percent by volume

(ii) *Noncombustion devices.* Except as provided in §63.1258(b)(5)(ii)(B), if a control device other than a combustion device is used to comply with a TOC, organic HAP, or hydrogen halide outlet concentration standard, the owner or operator must correct the actual concentration for supplemental gases using Equation 7B of this subpart; process knowledge and representative operating data may be used to determine the fraction of the total flow due to supplemental gas.

$$C_a = C_m\left(\frac{V_s + V_a}{V_a}\right) \qquad \text{(Eq. 7B)}$$

Where:

C_a = corrected outlet TOC, organic HAP, and hydrogen halides and halogens concentration, dry basis, ppmv

C_m = actual TOC, organic HAP, and hydrogen halides and halogens concentration measured at control device outlet, dry basis, ppmv

V_a = total volumetric flow rate of all gas streams vented to the control device, except supplemental gases

V_s = total volumetric flow rate of supplemental gases

(4) *Exemptions from compliance demonstrations.* An owner or operator using any control device specified in paragraphs (a)(4)(i) through (iv) of this section is exempt from the initial compliance provisions in paragraphs (c), (d), and (e) of this section.

(i) A boiler or process heater with a design heat input capacity of 44 megawatts or greater.

(ii) A boiler or process heater into which the emission stream is introduced with the primary fuel.

(iii) A boiler or process heater burning hazardous waste for which the owner or operator:

(A) Has been issued a final permit under 40 CFR part 270 and complies with the requirements of 40 CFR part 266, subpart H, or

(B) Has certified compliance with the interim status requirements of 40 CFR part 266, subpart H.

(iv) A hazardous waste incinerator for which the owner or operator has been issued a final permit under 40 CFR part 270 and complies with the requirements of 40 CFR part 264, subpart O, or has certified compliance with the interim status requirements of 40 CFR part 265, subpart O.

(5) *Initial compliance with alternative standard.* Initial compliance with the alternative standards in §§ 63.1253(d) and 63.1254(c) for combustion devices is demonstrated when the outlet TOC concentration is 20 ppmv or less, and the outlet hydrogen halide and halogen concentration is 20 ppmv or less. Initial compliance with the alternative standards in §§ 63.1253(d) and 63.1254(c) for noncombustion devices is demonstrated when the outlet TOC concentration is 50 ppmv or less, and the outlet hydrogen halide and hydrogen concentration is 50 ppmv or less. To demonstrate initial compliance, the owner or operator shall be in compliance with the monitoring provisions in § 63.1258(b)(5) on the initial compliance date. The owner or operator shall use Method 18 to determine the predominant organic HAP in the emission stream if the TOC monitor is calibrated on the predominant HAP.

(6) *Initial compliance with the 20 ppmv outlet limit.* Initial compliance with the 20 ppmv TOC and hydrogen halide and halogen concentration is demonstrated when the outlet TOC concentration is 20 ppmv or less, and the outlet hydrogen halide and halogen concentration is 20 ppmv or less. To demonstrate initial compliance, the operator shall use test methods described in paragraph (b) of this section. The owner or operator shall comply with the monitoring provisions in § 63.1258(b)(1) through (4) on the initial compliance date.

(b) *Test methods.* When testing is conducted to measure emissions from an affected source, the test methods specified in paragraphs (b)(1) through (10) of this section shall be used.

(1) EPA Method 1 or 1A of appendix A of part 60 is used for sample and velocity traverses.

(2) EPA Method 2, 2A, 2C, or 2D of appendix A of part 60 is used for velocity and volumetric flow rates.

(3) EPA Method 3 of appendix A of part 60 is used for gas analysis.

(4) EPA Method 4 of appendix A of part 60 is used for stack gas moisture.

(5) [Reserved]

(6) The following methods are specified for concentration measurements:

(i) Method 18 may be used to determine HAP concentration in any control device efficiency determination.

(ii) Method 25 of appendix A of part 60 may be used to determine total gaseous nonmethane organic concentration for control efficiency determinations in combustion devices.

(iii) Method 26 or 26A of appendix A of part 60 shall be used to determine hydrogen chloride, hydrogen halide and halogen concentrations in control device efficiency determinations or in the 20 ppmv outlet hydrogen halide concentration standard.

(iv) Method 25A of appendix A of part 60 may be used to determine the HAP

or TOC concentration for control device efficiency determinations under the conditions specified in Method 25 of appendix A for direct measurement of an effluent with a flame ionization detector, or in demonstrating compliance with the 20 ppmv TOC outlet standard. If Method 25A is used to determine the concentration of TOC for the 20 ppmv standard, the instrument shall be calibrated on methane or the predominant HAP. If calibrating on the predominant HAP, the use of Method 25A shall comply with paragraphs (b)(6)(iv)(A) through (C) of this section.

(A) The organic HAP used as the calibration gas for Method 25A, 40 CFR part 60, appendix A, shall be the single organic HAP representing the largest percent by volume.

(B) The use of Method 25A, 40 CFR part 60, appendix A, is acceptable if the response from the high level calibration gas is at least 20 times the standard deviation of the response from the zero calibration gas when the instrument is zeroed on the most sensitive scale.

(C) The span value of the analyzer must be less than 100 ppmv.

(7) *Testing conditions for continuous processes.* Testing of emissions on equipment operating as part of a continuous process will consist of three 1-hour runs. Gas stream volumetric flow rates shall be measured every 15 minutes during each 1-hour run. The HAP concentration shall be determined from samples collected in an integrated sample over the duration of each 1-hour test run, or from grab samples collected simultaneously with the flow rate measurements (every 15 minutes). If an integrated sample is collected for laboratory analysis, the sampling rate shall be adjusted proportionally to reflect variations in flow rate. For continuous gas streams, the emission rate used to determine compliance shall be the average emission rate of the three test runs.

(8) *Testing and compliance determination conditions for batch processes.* Testing of emissions on equipment where the flow of gaseous emissions is intermittent (batch operations) shall be conducted as specified in paragraphs (b)(8)(i) through (iii) of this section.

(i) Except as provided in paragraph (b)(9) of this section for condensers, testing shall be conducted at absolute worst-case conditions or hypothetical worst-case conditions. Gas stream volumetric flow rates shall be measured at 15-minute intervals. The HAP or TOC concentration shall be determined from samples collected in an integrated sample over the duration of the test, or from grab samples collected simultaneously with the flow rate measurements (every 15 minutes). If an integrated sample is collected for laboratory analysis, the sampling rate shall be adjusted proportionally to reflect variations in flow rate. The absolute worst-case or hypothetical worst-case conditions shall be characterized by the criteria presented in paragraphs (b)(8)(i)(A) and (B)of this section. In all cases, a site-specific plan shall be submitted to the Administrator for approval prior to testing in accordance with §63.7(c) and §63.1260(l). The test plan shall include the emission profile described in paragraph (b)(8)(ii) of this section.

(A) Absolute worst-case conditions are defined by the criteria presented in paragraph (b)(8)(i)(A)(*1*) or (*2*) of this section if the maximum load is the most challenging condition for the control device. Otherwise, absolute worst-case conditions are defined by the conditions in paragraph (b)(8)(i)(A)(*3*) of this section. The owner or operator must consider all relevant factors, including load and compound-specific characteristics in defining absolute worst-case conditions.

(*1*) The period in which the inlet to the control device will contain at least 50 percent of the maximum HAP load (in lb) capable of being vented to the control device over any 8 hour period. An emission profile as described in paragraph (b)(8)(ii)(A) of this section shall be used to identify the 8-hour period that includes the maximum projected HAP load.

(*2*) A 1-hour period of time in which the inlet to the control device will contain the highest HAP mass loading rate, in lb/hr, capable of being vented to the control device. An emission profile as described in paragraph (b)(8)(ii)(A) of this section shall be used

to identify the 1-hour period of maximum HAP loading.

(*3*) The period of time when the HAP loading or stream composition (including non-HAP) is most challenging for the control device. These conditions include, but are not limited to the following:

(*i*) Periods when the stream contains the highest combined VOC and HAP load, in lb/hr, described by the emission profiles in paragraph (b)(8)(ii) of this section;

(*ii*) Periods when the streams contain HAP constituents that approach limits of solubility for scrubbing media;

(*iii*) Periods when the streams contain HAP constituents that approach limits of adsorptivity for carbon adsorption systems.

(B) Hypothetical worst-case conditions are simulated test conditions that, at a minimum, contain the highest hourly HAP load of emissions that would be predicted to be vented to the control device from the emissions profile described in paragraph (b)(8)(ii)(B) or (C) of this section.

(ii) *Emissions profile*. The owner or operator may choose to perform tests only during those periods of the worst-case conditions that the owner or operator selects to control as part of achieving the required emission reduction. The owner or operator must develop an emission profile for the vent to the control device that describes the characteristics of the vent stream at the inlet to the control device under worst case conditions. The emission profile shall be developed based on any one of the procedures described in (b)(8)(ii)(A) through (C) of this section, as required by paragraph (b)(8)(i).

(A) *Emission profile by process*. The emission profile must consider all emission episodes that could contribute to the vent stack for a period of time that is sufficient to include all processes venting to the stack and shall consider production scheduling. The profile shall describe the HAP load to the device that equals the highest sum of emissions from the episodes that can vent to the control device in any given hour. Emissions per episode shall be calculated using the procedures specified in paragraph (d)(2) of this section. Emissions per episode shall be divided by the duration of the episode only if the duration of the episode is longer than 1 hour.

(B) *Emission profile by equipment*. The emission profile must consist of emissions that meet or exceed the highest emissions, in lb/hr, that would be expected under actual processing conditions. The profile shall describe equipment configurations used to generate the emission events, volatility of materials processed in the equipment, and the rationale used to identify and characterize the emission events. The emissions may be based on using a compound more volatile than compounds actually used in the process(es), and the emissions may be generated from all equipment in the process(es) or only selected equipment.

(C) *Emission profile by capture and control device limitation*. The emission profile shall consider the capture and control system limitations and the highest emissions, in lb/hr, that can be routed to the control device, based on maximum flowrate and concentrations possible because of limitations on conveyance and control equipment (e.g., fans, LEL alarms and safety bypasses).

(iii) Three runs, at a minimum of 1 hour each and a maximum of 8 hours each, are required for performance testing. Each run must occur over the same worst-case conditions, as defined in paragraph (b)(8)(i) of this section.

(9) *Testing requirements for condensers*. For emission streams controlled using condensers, continuous direct measurement of condenser outlet gas temperature to be used in determining concentrations per the design evaluation described in § 63.1257(a)(1)(iii) is required.

(10) *Wastewater testing*. Wastewater analysis shall be conducted in accordance with paragraph (b)(10)(i), (ii), (iii), (iv), or (v) of this section.

(i) *Method 305*. Use procedures specified in Method 305 of 40 CFR part 63, appendix A, and comply with requirements specified in paragraph (b)(10)(vi) of this section.

(ii) *EPA Method 624, 625, 1624, 1625, 1666, or 1671*. Use procedures specified in EPA Method 624, 625, 1624, 1625, 1666, or 1671 of 40 CFR part 136, appendix A, and comply with requirements in paragraph (b)(10)(vi) of this section.

(iii) *Method 8260 or 8270*. Use procedures specified in Method 8260 or 8270 in ''Test Methods for Evaluating Solid Waste, Physical/Chemical Methods,'' EPA Publication No. SW–846, Third Edition, September 1986, as amended by Update I, November 15, 1992. As an alternative, an owner or operator may use any more recent, updated version of Method 8260 or 8270 approved by the EPA. For the purpose of using Method 8260 or 8270 to comply with this subpart, the owner or operator must maintain a formal quality assurance program consistent with either Section 8 of Method 8260 or Method 8270, and this program must include the following elements related to measuring the concentrations of volatile compounds:

(A) Documentation of site-specific procedures to minimize the loss of compounds due to volatilization, biodegradation, reaction, or sorption during the sample collection, storage, and preparation steps.

(B) Documentation of specific quality assurance procedures followed during sampling, sample preparation, sample introduction, and analysis.

(C) Measurement of the average accuracy and precision of the specific procedures, including field duplicates and field spiking of the material source before or during sampling with compounds having similar chemical characteristics to the target analytes.

(iv) *Other EPA methods*. Use procedures specified in the method, validate the method using the procedures in paragraph (b)(10)(iv)(A) or (B) of this section, and comply with the procedures in paragraph (b)(10)(vi) of this section.

(A) Validate the method according to section 5.1 or 5.3 of Method 301 of 40 CFR part 63, appendix A.

(B) Follow the procedure as specified in ''Alternative Validation Procedure for EPA Waste Methods'' 40 CFR part 63, appendix D.

(v) *Methods other than an EPA method*. Use procedures specified in the method, validate the method using the procedures in paragraph (b)(10)(iv)(A) of this section, and comply with the requirements in paragraph (b)(10)(vi) of this section.

(vi) *Sampling plan*. The owner or operator shall prepare a sampling plan. Wastewater samples shall be collected using sampling procedures which minimize loss of organic compounds during sample collection and analysis and maintain sample integrity. The sample plan shall include procedures for determining recovery efficiency of the relevant partially soluble and soluble HAP compounds. An example of an acceptable sampling plan would be one that incorporates similar sampling and sample handling requirements to those of Method 25D of 40 CFR part 60, appendix A. The sampling plan shall be maintained at the facility.

(c) *Initial compliance with storage tank provisions*. The owner or operator of an affected storage tank shall demonstrate initial compliance with §63.1253(b) or (c), as applicable, by fulfilling the requirements of paragraph (c)(1),or (c)(2), or (c)(3) of this section.

(1) *Performance test*. If this option is chosen to demonstrate initial compliance with the percent reduction requirement of §63.1253(b)(1) or (c)(1)(i), the efficiency of the control device shall be calculated using performance test data as specified in paragraphs (c)(1)(i) through (iii) of this section. To demonstrate initial compliance with the outlet concentration requirements in §63.1253(b)(2) and (c)(2), the owner or operator must conduct a performance test and fulfill the requirements of paragraph (a)(6) of this section.

(i) Equations 8 and 9 of this subpart shall be used to calculate the mass rate of total HAP reasonably expected maximum filling rate at the inlet and outlet of the control device for standard conditions of 20 °C: where:

$$E_i = K_2\left(\sum_{j=1}^{n} C_{ij}M_{ij}\right)Q_i \qquad \text{(Eq. 8)}$$

$$E_o = K_2\left(\sum_{j=1}^{n} C_{oj}M_{oj}\right)Q_o \qquad \text{(Eq. 9)}$$

where:

C_{ij}, C_{oj} = concentration of sample component j of the gas stream at the inlet and outlet of the control device, respectively, dry basis, ppmv

E_i, E_o = mass rate of total HAP at the inlet and outlet of the control device, respectively, dry basis, kg/hr

M_{ij}, M_{oj} = molecular weight of sample component j of the gas stream at the inlet and outlet of the control device, respectively, gram/gram-mole

Q_i, Q_o = flow rate of gas stream at the inlet and outlet of the control device, respectively, dry standard cubic meter per minute

K_2 = constant, 2.494×10^{-6} (parts per million)$^{-1}$ (gram-mole per standard cubic meter) (kilogram/gram) (minute/hour), where standard temperature is 20 °C

n = number of sample components in the gas stream

(ii) The percent reduction in total HAP shall be calculated using Equation 10 of this subpart:

$$R = \frac{E_i - E_o}{E_i}(100) \qquad \text{(Eq. 10)}$$

where:

R = control efficiency of control device, percent

E_i = mass rate of total HAP at the inlet to the control device as calculated under paragraph (c)(1)(i) of this section, kilograms organic HAP per hour

E_o = mass rate of total HAP at the outlet of the control device, as calculated under paragraph (c)(1)(i) of this section, kilograms organic HAP per hour

(iii) A performance test is not required to be conducted if the control device used to comply with § 63.1253 (storage tank provisions) is also used to comply with § 63.1254 (process vent provisions), and compliance with § 63.1254 has been demonstrated in accordance with paragraph (d) of this section.

(2) *Design evaluation*. If this option is chosen to demonstrate initial compliance with the percent reduction requirement of § 63.1253(b) or (c), a design evaluation shall be prepared in accordance with the provisions in paragraph (a)(1) of this section. The design evaluation shall include documentation demonstrating that the control device being used achieves the required control efficiency during reasonably expected maximum filling rate.

(3) *Floating roof*. If the owner or operator of an affected source chooses to comply with the provisions of § 63.1253(b) or (c) by installing a floating roof, the owner or operator shall comply with the procedures described in §§ 63.119(b), (c), (d), and 63.120(a), (b), and (c), with the differences noted in paragraphs (c)(3)(i) through (v) of this section for the purposes of this subpart.

(i) When the term ''storage vessel'' is used in §§ 63.119 and 63.120, the definition of ''storage tank'' in § 63.1251 shall apply for the purposes of this subpart.

(ii) When December 31, 1992 is referred to in § 63.119, April 2, 1997 shall apply instead for the purposes of this subpart.

(iii) When April 22, 1994 is referred to in § 63.119, September 21, 1998 shall apply instead for the purposes of this subpart.

(iv) When the phrase ''the compliance date specified in § 63.100 of subpart F of this part'' is referred to in § 63.120, the phrase ''the compliance date specified in § 63.1250'' shall apply for the purposes of this subpart.

(v) When the phrase ''the maximum true vapor pressure of the total organic HAP's in the stored liquid falls below the values defining Group 1 storage vessels specified in table 5 or table 6 of this subpart'' is referred to in § 63.120(b)(1)(iv), the phrase ''the maximum true vapor pressure of the total organic HAP in the stored liquid falls below 13.1 kPa'' shall apply for the purposes of this subpart.

(4) *Initial compliance with alternative standard*. Initial compliance with § 63.1253(d) is demonstrated by fulfilling the requirements of paragraph (a)(5) of this section.

(5) *Planned maintenance*. The owner or operator shall demonstrate compliance with the requirements of § 63.1253(e) by including the periods of planned routine maintenance specified by date and time in each Periodic Report required by § 63.1260.

(d) *Initial compliance with process vent provisions*. An owner or operator of an affected source complying with the process vent standards in § 63.1254 shall

demonstrate compliance using the procedures described in paragraphs (d)(1) through (4) of this section.

(1) Except as provided in paragraph (a)(4) of this section, initial compliance with the process vent standards in §63.1254 shall be demonstrated using the procedures specified in paragraphs (d)(1)(i) through (iv), as applicable.

(i) Initial compliance with §63.1254(a)(2)(i) is demonstrated when the actual emissions of HAP from the sum of all process vents within a process is less than or equal to 900 kg/yr. Initial compliance with §63.1254(a)(2)(ii) is demonstrated when the actual emissions of HAP from the sum of all process vents in compliance with §63.1254(a)(2)(i) is less than or equal to 1,800 kg/yr. Uncontrolled HAP emissions and controlled HAP emissions shall be determined using the procedures described in paragraphs (d)(2) and (3) of this section. Controlled emissions during periods of planned routine maintenance of a CCCD as specified in §63.1252(h), must be calculated assuming the HAP emissions are reduced by 93 percent.

(ii) Initial compliance with the percent reduction requirements in §63.1254(a)(1)(i), (a)(3), and (b) is demonstrated by:

(A) Determining controlled HAP emissions using the procedures described in paragraph (d)(3) of this section, and uncontrolled HAP emissions determined using the procedures described in paragraph (d)(2) of this section, and demonstrating that the reductions required by §63.1254(a)(1)(i), (a)(3), and (b) are met; or

(B) Controlling the process vents using a device meeting the criteria specified in paragraph (a)(4) of this section.

(iii) Initial compliance with the outlet concentration requirements in §63.1254(a)(1)(ii)(A), (a)(3), and (b)(1) is demonstrated when the outlet TOC concentration is 20 ppmv or less and the outlet hydrogen halide and halogen concentration is 20 ppmv or less. The owner or operator shall demonstrate compliance by fulfilling the requirements in paragraph (a)(6) of this section.

(iv) Initial compliance with §63.1254(c) is demonstrated by fulfilling the requirements of paragraph (a)(5) of this section.

(2) *Uncontrolled emissions.* An owner or operator of an affected source complying with the emission limitation required by §63.1254(a)(1), or emissions reductions specified in §63.1254(a)(2), (a)(3), or (b), for each process vent within a process, shall calculate uncontrolled emissions from all equipment in the process according to the procedures described in paragraph (d)(2)(i) or (ii) of this section, as appropriate.

(i) *Emission estimation procedures.* Owners or operators shall determine uncontrolled emissions of HAP using measurements and/or calculations for each batch emission episode within each unit operation according to the engineering evaluation methodology in paragraphs (d)(2)(i)(A) through (H) of this section. Except where variations are noted, individual HAP partial pressures in multicomponent systems shall be determined by the following methods: If the components are miscible in one another, use Raoult's law to calculate the partial pressures; if the solution is a dilute aqueous mixture, use Henry's law to calculate partial pressures; if Raoult's law or Henry's law are not appropriate or available, use experimentally obtained activity coefficients or models such as the group-contribution models, to predict activity coefficients, or assume the components of the system behave independently and use the summation of all vapor pressures from the HAP as the total HAP partial pressure. Chemical property data can be obtained from standard reference texts.

(A) *Vapor displacement.* Emissions from vapor displacement due to transfer of material shall be calculated using Equation 11 of this subpart. The individual HAP partial pressures may be calculated using Raoult's law.

$$E = \frac{(V)}{(R)(T)} \times \sum_{i=1}^{n} (P_i)(MW_i) \qquad \text{(Eq. 11)}$$

where:

E = mass of HAP emitted

V = volume of gas displaced from the vessel

R = ideal gas law constant

T = temperature of the vessel vapor space; absolute

P_i = partial pressure of the individual HAP
MW_i = molecular weight of the individual HAP
n = number of HAP compounds in the emission stream i = identifier for a HAP compound

(B) *Purging*. Emissions from purging shall be calculated using Equation 12 of this subpart. The partial pressures of individual condensable compounds may be calculated using Raoult's law, the pressure of the vessel vapor space may be set equal to 760 mmHg, and the partial pressure of HAP shall be assumed to be 25 percent of the saturated value if the purge flow rate is greater than 100 standard cubic feet per minute (scfm).

$$E = \sum_{i=1}^{n} P_i MW_i \times \frac{(V)(t)}{(R)(T)} \times \frac{P_T}{P_T - \sum_{j=1}^{m}\left(P_j\right)} \qquad \text{(Eq. 12)}$$

Where:
E = mass of HAP emitted
V = purge flow rate at the temperature and pressure of the vessel vapor space
R = ideal gas law constant
T = temperature of the vessel vapor space; absolute
P_i = partial pressure of the individual HAP
P_j = partial pressure of individual condensable VOC compounds (including HAP)
P_T = pressure of the vessel vapor space
MW_i = molecular weight of the individual HAP
t = time of purge
n = number of HAP compounds in the emission stream
i = identifier for a HAP compound
j = identifier for a condensable compound
m = number of condensable compounds (including HAP) in the emission stream

(C) *Heating*. Emissions caused by the heating of a vessel to a temperature equal to or lower than 10 K below the boiling point shall be calculated using the procedures in either paragraph (d)(2)(i)(C)(*1*) or (*3*) of this section. Emissions caused by heating a vessel to a temperature that is higher than 10 K below the boiling point and less than the boiling point, must be calculated using the procedures in either paragraph (d)(2)(i)(C) (*2*) or (*3*) of this section. If the contents of a vessel are heated to the boiling point, emissions must be calculated using the procedures in paragraph (d)(2)(i)(C)(*4*) of this section.

(*1*) This paragraph describes procedures to calculate emissions if the final temperature to which the vessel contents are heated is 10 K below the boiling point of the HAP in the vessel, or lower. The owner or operator shall calculate the mass of HAP emitted per episode using either Equation 13 or 14 of this subpart. The moles of noncondensable gas displaced are calculated using Equation 15 of this subpart. The initial and final pressure of the noncondensable gas in the vessel shall be calculated using Equation 16 of this subpart. The average molecular weight of HAP in the displaced gas shall be calculated using Equation 17 of this subpart.

$$E = \frac{\sum_{i=1}^{n}\left((P_i*)(x_i)(MW_i)\right)}{760 - \sum_{j=1}^{m}\left((P_j*)(x_j)\right)} \times \Delta\eta \qquad \text{(Eq. 13)}$$

$$E = \frac{\frac{\sum_{i=1}^{n}(P_i)_{T1}}{Pa_1} + \frac{\sum_{i=1}^{n}(P_i)_{T2}}{Pa_2}}{2} \times \Delta\eta \times MW_{HAP} \qquad \text{(Eq. 14)}$$

$$\Delta\eta = \frac{V}{R}\left[\left(\frac{Pa_1}{T_1}\right) - \left(\frac{Pa_2}{T_2}\right)\right] \qquad \text{(Eq. 15)}$$

$$Pa_n = P_{atm} - \sum_{j=1}^{m}(P_j)_{Tn} \qquad \text{(Eq. 16)}$$

$$MW_{HAP} = \sum_{i=1}^{n}\frac{\left((P_i)_{T_1} + (P_i)_{T_2}\right)MW_i}{\sum_{i=1}^{n}\left((P_i)_{T_1} + (P_i)_{T_2}\right)} \qquad \text{(Eq. 17)}$$

Where:

E = mass of HAP vapor displaced from the vessel being heated

x_i = mole fraction of each HAP in the liquid phase

x_j = mole fraction of each condensable VOC (including HAP) in the liquid phase

P_i* = vapor pressure of each HAP in the vessel headspace at any temperature between the initial and final heatup temperatures, mmHg.

P_j* = vapor pressure of each condensable VOC (including HAP) in the vessel headspace at any temperature between the initial and final heatup temperatures, mmHg.

760 = atmospheric pressure, mmHg

MW_{HAP} = the average molecular weight of HAP present in the displaced gas

$\Delta\eta$ = number of moles of noncondensable gas displaced

V = volume of free space in the vessel

R = ideal gas law constant

T_1 = initial temperature of vessel contents, absolute

T_2 = final temperature of vessel contents, absolute

Pa_n = partial pressure of noncondensable gas in the vessel headspace at initial (n=1) and final (n=2) temperature

P_{atm} = atmospheric pressure (when $\Delta\eta$ is used in Equation 13 of this subpart, P_{atm} may be set equal to 760 mmHg for any vessel)

$(P_j)_{Tn}$ = partial pressure of each condensable compound (including HAP) in the vessel headspace at the initial temperature (n=1) and final (n=2) temperature

m = number of condensable compounds (including HAP) in the displaced vapor

j = identifier for a condensable compound

$(P_i)_{Tn}$ = partial pressure of each HAP in the vessel headspace at initial (T_1) and final (T_2) temperature

MW_i = molecular weight of the individual HAP

n = number of HAP compounds in the emission stream

i = identifier for a HAP compound

(*2*) If the vessel contents are heated to a temperature that is higher than 10

K below the boiling point and less than the boiling point, emissions must be calculated using the procedures in paragraph (d)(2)(i)(C)(*2*)(*i*), or (*ii*), or (*iii*) of this section.

(*i*) Use Equation 13 of this subpart. In Equation 13 of this subpart, the HAP vapor pressures must be determined at the temperature 10 K below the boiling point. In the calculation of $\Delta\eta$ for Equation 13 of this subpart, T_2 must be the temperature 10 K below the boiling point, and Pa_2 must be determined at the temperature 10 K below the boiling point.

(*ii*) Use Equation 14 of this subpart. In Equation 14 of this subpart, the HAP partial pressures must be deter mined at the temperature 10 K below the boiling point. In the calculation of $\Delta\eta$ for Equation 14 of this subpart, T_2 must be the temperature 10 K below the boiling point, and Pa_2 must be determined at the temperature 10 K below the boiling point. In the calculation of MW_{HAP}, the HAP partial pressures must be determined at the temperature 10 K below the boiling point.

(*iii*) Use Equation 14 of this subpart over specific temperature increments. If the initial temperature is lower than 10 K below the boiling point, emissions must be calculated as the sum over two increments; one increment is from the initial temperature to 10 K below the boiling point, and the second is from 10 K below the boiling point to the lower of either the final temperature or the temperature 5 K below the boiling point. If the initial temperature is higher than 10 K below the boiling point, emissions are calculated over one increment from the initial temperature to the lower of either the final temperature or the temperature 5 K below the boiling point.

(*3*)(*i*) Emissions caused by heating a vessel are calculated using Equation 18 of this subpart.

$$E = MW_{HAP} \times \left(N_{avg} \times \ln\left(\frac{P_T - \sum_{i=1}^{n}\left(P_{i,1}\right)}{P_T - \sum_{i=1}^{n}\left(P_{i,2}\right)} \right) - \left(n_{i,2} - n_{i,1}\right) \right) \qquad \text{(Eq. 18)}$$

Where:

E = mass of HAP vapor displaced from the vessel being heated

N_{avg} = average gas space molar volume during the heating process

P_T= total pressure in the vessel

$P_{i,1}$ = partial pressure of the individual HAP compounds at T_1

$P_{i,2}$ = partial pressure of the individual HAP compounds at T_2

MW_{HAP} = average molecular weight of the HAP compounds

$n_{i,1}$ = number of moles of condensable in the vessel headspace at T_1

$n_{i,2}$ = number of moles of condensable in the vessel headspace at T_2

n = number of HAP compounds in the emission stream

(*ii*) The average gas space molar volume during the heating process is calculated using Equation 19 of this subpart.

$$N_{avg} = \frac{VP_T}{2R}\left(\frac{1}{T_1} + \frac{1}{T_2}\right) \qquad \text{(Eq. 19)}$$

Where:

N_{avg} = average gas space molar volume during the heating process

V = volume of free space in vessel
P_T = total pressure in the vessel
R = ideal gas law constant
T_1 = initial temperature of the vessel
T_2 = final temperature of the vessel

(*iii*) The difference in the number of moles of condensable in the vessel headspace between the initial and final temperatures is calculated using Equation 20 of this subpart.

$$\left(n_{i,2} - n_{i,1}\right) = \frac{V}{(R)(T_2)}\sum_{i=1}^{n} P_{i,2} - \frac{V}{(R)(T_1)}\sum_{i=1}^{n} P_{i,1} \qquad \text{(Eq. 20)}$$

Where:
V = volume of free space in vessel
R = ideal gas law constant
T_1 = initial temperature in the vessel
T_2 = final temperature in the vessel
$P_{i,1}$ = partial pressure of the individual HAP compounds at T_1
$P_{i,2}$ = partial pressure of the individual HAP compounds at T_2
n = number of HAP compounds in the emission stream

(*4*) If the vessel contents are heated to the boiling point, emissions must be calculated using the procedure in paragraphs (d)(2)(i)(C)(*4*)(*i*) and (*ii*) of this section.

(*i*) Use either of the procedures in paragraph (d)(3)(i)(B)(*3*) of this section to calculate the emissions from heating to the boiling point (note that Pa_2=0 in the calculation of; and

(*ii*) While boiling, the vessel must be operated with a properly operated process condenser. An initial demonstration that a process condenser is properly operated is required for some process condensers, as described in paragraph (d)(3)(iii) of this section.

(D) *Depressurization*. Emissions from depressurization shall be calculated using the procedures in either paragraphs (d)(2)(i)(D)(*1*) through (*4*), paragraphs (d)(2)(i)(D)(*5*) through (*9*), or paragraph (d)(2)(i)(D)(*10*) of this section.

(*1*) Equations 21 and 22 of this subpart are used to calculate the initial and final volumes of noncondensable gas present in the vessel, adjusted to atmospheric pressure. The HAP partial pressures may be calculated using Raoult's law.

$$V_{nc1} = \frac{VP_{nc_1}}{760} \qquad \text{(Eq. 21)}$$

$$V_{nc2} = \frac{VP_{nc_2}}{760} \qquad \text{(Eq. 22)}$$

Where:
V_{nc1} = initial volume of noncondensable gas in the vessel
V_{nc2} = final volume of noncondensable gas in the vessel
V = free volume in the vessel being depressurized
P_{nc1} = initial partial pressure of the noncondensable gas, as calculated using Equation 23 of this subpart, mmHg
P_{nc2} = final partial pressure of the noncondensable gas, as calculated using Equation 24 of this subpart, mmHg
760 = atmospheric pressure, mmHg

(*2*) The initial and final partial pressures of the noncondensable gas in the vessel are determined using Equations 23 and 24 of this subpart:

$$P_{nc1} = P_1 - \sum_{j=1}^{m}\left(P_j*\right)\left(x_j\right) \qquad \text{(Eq. 23)}$$

$$P_{nc2} = P_2 - \sum_{j=1}^{m}\left(P_j*\right)\left(x_j\right) \qquad \text{(Eq. 24)}$$

Where:
P_{nc1} = initial partial pressure of the noncondensable gas
P_{nc2} = final partial pressure of the noncondensable gas
P_1 = initial vessel pressure
P_2 = final vessel pressure
P_j* = vapor pressure of each condensable (including HAP) in the emission stream
x_j = mole fraction of each condensable (including HAP) in the liquid phase

m = number of condensable compounds (including HAP) in the emission stream

j = identifier for a condensable compound

(*3*) The average ratio of moles of noncondensable to moles of an individual HAP in the emission stream is calculated using Equation 25 of this subpart; this calculation must be repeated for each HAP in the emission stream:

$$n_{Ri} = \frac{\left(\frac{P_{nc1}}{(P_i*)(x_i)} + \frac{P_{nc2}}{(P_i*)(x_i)}\right)}{2} \qquad \text{(Eq. 25)}$$

Where:

n_{Ri} = average ratio of moles of noncondensable to moles of individual HAP

P_{nc1} = initial partial pressure of the noncondensable gas, as calculated using Equation 23 of this subpart

P_{nc2} = final partial pressure of the noncondensable gas, as calculated using Equation 24 of this subpart

P_i* = vapor pressure of each individual HAP

x_i = mole fraction of each individual HAP in the liquid phase.

n = number of HAP compounds

i = identifier for a HAP compound

(*4*) The mass of HAP emitted shall be calculated using Equation 26 of this subpart:

$$E = (V_{nc1} - V_{nc2}) \times \frac{P_{atm}}{RT} \times \sum_{i=1}^{n} \frac{MW_i}{n_{Ri}} \qquad \text{(Eq. 26)}$$

Where:

E = mass of HAP emitted

V_{nc1} = initial volume of noncondensable gas in the vessel, as calculated using Equation 21 of this subpart

V_{nc2} = final volume of noncondensable gas in the vessel, as calculated using Equation 22 of this subpart

n_{Ri} = average ratio of moles of noncondensable to moles of individual HAP, as calculated using Equation 25 of this subpart

P_{atm} = atmospheric pressure, standard

R = ideal gas law constant

T = temperature of the vessel, absolute

MW_i = molecular weight of each HAP

(*5*) The moles of HAP vapor initially in the vessel are calculated using the ideal gas law using Equation 27 of this subpart:

$$n_{HAP} = \frac{(Y_{HAP})(V)(P_1)}{R\,T} \qquad \text{(Eq. 27)}$$

Where:

Y_{HAP} = mole fraction of HAP (the sum of the individual HAP fractions, ΣY_i)

V = free volume in the vessel being depressurized

P_1 = initial vessel pressure

R = ideal gas law constant

T = vessel temperature, absolute

(*6*) The initial and final moles of noncondensable gas present in the vessel are calculated using Equations 28 and 29 of this subpart:

$$n_1 = \frac{VP_{nc_1}}{RT} \qquad \text{(Eq. 28)}$$

$$n_2 = \frac{VP_{nc_2}}{RT} \qquad \text{(Eq. 29)}$$

Where:

n_1 = initial number of moles of noncondensable gas in the vessel

n_2 = final number of moles of noncondensable gas in the vessel

V = free volume in the vessel being depressurized

P_{nc1} = initial partial pressure of the noncondensable gas, as calculated using Equation 23 of this subpart

P_{nc2} = final partial pressure of the noncondensable gas, as calculated using Equation 24 of this subpart

R = ideal gas law constant

T = temperature, absolute

(*7*) The initial and final partial pressures of the noncondensable gas in the vessel are determined using Equations 23 and 24 of this subpart.

(*8*) The moles of HAP emitted during the depressurization are calculated by taking an approximation of the average ratio of moles of HAP to moles of noncondensable and multiplying by the total moles of noncondensables released during the depressurization, using Equation 30 of this subpart:

where:

$$n_{HAP} = \frac{\left(\frac{n_{HAP,1}}{n_1} + \frac{n_{HAP,2}}{n_2}\right)}{2}\left[n_1 - n_2\right] \qquad \text{(Eq. 30)}$$

n_{HAP} = moles of HAP emitted

n_1 = initial number of moles of noncondensable gas in the vessel, as calculated using Equation 28 of this subpart

n_2 = final number of moles of noncondensable gas in the vessel, as calculated using Equation 29 of this subpart

(*9*) The mass of HAP emitted can be calculated using Equation 31 of this subpart:

$$E = \eta_{HAP} * MW_{HAP} \qquad \text{(Eq. 31)}$$

where:

E = mass of HAP emitted

η_{HAP} = moles of HAP emitted, as calculated using Equation 30 of this subpart

MW_{HAP} = average molecular weight of the HAP as calculated using Equation 17 of this subpart

(*10*) Emissions from depressurization may be calculated using equation 32 of this subpart:

$$E = \frac{V}{(R)(T)} \times 1n\left(\frac{P_1 - \sum_{j=1}^{m}\left(P_j\right)}{P_2 - \sum_{j=1}^{m}\left(P_j\right)}\right) \times \sum_{i=1}^{n}\left(P_i\right)\left(MW_i\right) \qquad \text{(Eq. 32)}$$

Where:

V = free volume in vessel being depressurized

R = ideal gas law constant

T = temperature of the vessel, absolute

P_1 = initial pressure in the vessel

P_2 = final pressure in the vessel

P_j = partial pressure of the individual condensable compounds (including HAP)

MW_i = molecular weight of the individual HAP compounds

n = number of HAP compounds in the emission stream

m = number of condensable compounds (including HAP) in the emission stream

i = identifier for a HAP compound

j = identifier for a condensable compound.

(E) *Vacuum systems*. Emissions from vacuum systems may be calculated using Equation 33 of this subpart if the

air leakage rate is known or can be approximated. The individual HAP partial pressures may be calculated using Raoult's Law.

$$E = \frac{(La)(t)}{MW_{nc}} \left(\frac{\sum_{i=1}^{n} P_i MW_i}{P_{system} - \sum_{j=1}^{m} P_j} \right) \qquad \text{(Eq. 33)}$$

Where:

E = mass of HAP emitted

P_{system} = absolute pressure of receiving vessel or ejector outlet conditions, if there is no receiver

P_i = partial pressure of the HAP at the receiver temperature or the ejector outlet conditions

P_j = partial pressure of condensable (including HAP) at the receiver temperature or the ejector outlet conditions

La = total air leak rate in the system, mass/time

MW_{nc} = molecular weight of non-condensable gas

t = time of vacuum operation

MW_i = molecular weight of the individual HAP in the emission stream, with HAP partial pressures calculated at the temperature of the receiver or ejector outlet, as appropriate

(F) *Gas evolution*. Emissions from gas evolution shall be calculated using Equation 12 of this subpart with V calculated using Equation 34 of this subpart:

$$V = \frac{(W_g)(R)(T)}{(P_T)(MW_g)} \qquad \text{(Eq. 34)}$$

Where:

V = volumetric flow rate of gas evolution

W_g = mass flow rate of gas evolution

R = ideal gas law constant

T = temperature at the exit, absolute

P_T = vessel pressure

MW_g = molecular weight of the evolved gas

(G) *Air drying*. Emissions from air drying shall be calculated using Equation 35 of this subpart:

$$E = B \times \left(\frac{PS_1}{100 - PS_1} - \frac{PS_2}{100 - PS_2} \right) \qquad \text{(Eq. 35)}$$

Where:

E = mass of HAP emitted

B = mass of dry solids

PS_1 = HAP in material entering dryer, weight percent

PS_2 = HAP in material exiting dryer, weight percent

(H) *Empty vessel purging*. Emissions from empty vessel purging shall be calculated using Equation 36 of this subpart (Note: The term $e^{-Ft/v}$ can be assumed to be 0):

$$E = \left(\frac{V}{RT} \times \left(\sum_{i=1}^{n} (P_i)(MW_i) \right) \left(1 - e^{-Ft/v}\right) \right) \qquad \text{(Eq. 36)}$$

Where:

V = volume of empty vessel

R = ideal gas law constant

T = temperature of the vessel vapor space; absolute

P_i = partial pressure of the individual HAP at the beginning of the purge

(MW_i) = molecular weight of the individual HAP

F = flowrate of the purge gas

t = duration of the purge

n = number of HAP compounds in the emission stream

i = identifier for a HAP compound

(ii) *Engineering assessments.* The owner or operator shall conduct an engineering assessment to calculate uncontrolled HAP emissions for each emission episode that is not due to vapor displacement, purging, heating, depressurization, vacuum operations, gas evolution, or air drying. For emission episodes caused by any of these types of activities, the owner or operator also may calculate uncontrolled HAP emissions based on an engineering assessment if the owner or operator can demonstrate to the Administrator that the methods in paragraph (d)(2)(i) of this section are not appropriate. Modified versions of the engineering evaluation methods in paragraphs (d)(2)(i)(A) through (H) may be used if the owner or operator demonstrates that they have been used to meet other regulatory obligations, and they do not affect applicability assessments or compliance determinations under this subpart GGG. One criterion the owner or operator could use to demonstrate that the methods in paragraph (d)(2)(i) of this section are not appropriate is if previous test data are available that show a greater than 20 percent discrepancy between the test value and the estimated value. An engineering assessment includes, but is not limited to, the following:

(A) Previous test results, provided the tests are representative of current operating practices at the process unit.

(B) Bench-scale or pilot-scale test data representative of the process under representative operating conditions.

(C) Maximum flow rate, HAP emission rate, concentration, or other relevant parameter specified or implied within a permit limit applicable to the process vent.

(D) Design analysis based on accepted chemical engineering principles, measurable process parameters, or physical or chemical laws or properties. Examples of analytical methods include, but are not limited to:

(*1*) Use of material balances based on process stoichiometry to estimate maximum organic HAP concentrations.

(*2*) Estimation of maximum flow rate based on physical equipment design such as pump or blower capacities.

(*3*) Estimation of HAP concentrations based on saturation conditions.

(E) All data, assumptions, and procedures used in the engineering assessment shall be documented in accordance with §63.1260(e). Data or other information supporting a finding that the emissions estimation equations are inappropriate shall be reported in the Precompliance report.

(3) *Controlled emissions.* An owner or operator shall determine controlled emissions using the procedures in either paragraph (d)(3)(i) or (ii) of this section.

(i) *Small control devices.* Except for condensers, controlled emissions for each process vent that is controlled using a small control device shall be determined by using the design evaluation described in paragraph (d)(3)(i)(A) of this section, or conducting a performance test in accordance with paragraph (d)(3)(ii) of this section. Whenever a small control device becomes a large control device, the owner or operator must comply with the provisions in paragraph (d)(3)(ii) of this section and submit the test report in the next Periodic report.

(A) *Design evaluation.* The design evaluation shall include documentation demonstrating that the control device being used achieves the required control efficiency under worst-case conditions, as determined from the emission profile described in § 63.1257(b)(8)(ii). The control efficiency determined from this design evaluation shall be applied to uncontrolled emissions to estimate controlled emissions. The documentation must be conducted in accordance with the provisions in paragraph (a)(1) of this section. The design evaluation shall also include the value(s) and basis for the parameter(s) monitored under § 63.1258.

(B) *Emission estimation equations.* An owner or operator using a condenser as a control device shall determine controlled emissions using exhaust gas temperature measurements and calculations for each batch emission episode within each unit operation according to the engineering methodology in paragraphs (d)(3)(i)(B)(*1*) through (*8*) of this section. Individual HAP partial pressures shall be calculated as specified in paragraph (d)(2)(i) of this section.

(*1*) Emissions from vapor displacement shall be calculated using Equation 11 of this subpart with T set equal to the temperature of the receiver and the HAP partial pressures determined at the temperature of the receiver.

(*2*) Emissions from purging shall be calculated using Equation 12 of this subpart with T set equal to the temperature of the receiver and the HAP partial pressures determined at the temperature of the receiver.

(*3*) Emissions from heating shall be calculated using either Equation 13 of this subpart or Equation 37 of this subpart. In Equation 13, the HAP vapor pressures shall be determined at the temperature of the receiver. In Equations 13 and 37 of this subpart, $\Delta\eta$ is equal to the number of moles of noncondensable displaced from the vessel, as calculated using Equation 15 of this subpart. In Equations 13 and 37 of this subpart, the HAP average molecular weight shall be calculated using Equation 17 with the HAP partial pressures determined at the temperature of the receiver.

$$E = \Delta\eta \times \frac{\sum_{i=1}^{n} P_i}{P_T - \sum_{j=1}^{m} P_j} \times MW_{HAP} \quad \text{(Eq. 37)}$$

Where:

E = mass of HAP emitted

$\Delta\eta$ = moles of noncondensable gas displaced

P_T = pressure in the receiver

P_i = partial pressure of the individual HAP at the receiver temperature

P_j = partial pressure of the individual condensable (including HAP) at the receiver temperature

n = number of HAP compounds in the emission stream

i = identifier for a HAP compound

MW_{HAP} = the average molecular weight of HAP in vapor exiting the receiver, as calculated using Equation 17 of this subpart

m = number of condensable compounds (including HAP) in the emission stream

(*4*)(*i*) Emissions from depressurization shall be calculated using Equation 38 of this subpart.

$$E = \left(V_{nc1} - V_{nc2}\right) \times \frac{\sum_{i=1}^{n}\left(P_i\right)}{P_T - \sum_{j=1}^{m}\left(P_j\right)} \times \frac{P_T}{RT} \times MW_{HAP} \quad \text{(Eq. 38)}$$

Where:

E = mass of HAP vapor emitted

V_{nc1} = initial volume of noncondensable in the vessel, corrected to the final

pressure, as calculated using Equation 39 of this subpart

V_{nc2} = final volume of noncondensable in the vessel, as calculated using Equation 40 of this subpart

P_i = partial pressure of each individual HAP at the receiver temperature

P_j = partial pressure of each condensable (including HAP) at the receiver temperature

P_T = receiver pressure

T = temperature of the receiver

R = ideal gas law constant

MW_{HAP} = the average molecular weight of HAP calculated using Equation 17 of this subpart with partial pressures determined at the receiver temperature

i = identifier for a HAP compound

n = number of HAP compounds in the emission stream

m = number of condensable compounds (including HAP) in the emission stream

j = identifier for a condensable compound

(*ii*) The initial and final volumes of noncondensable gas present in the vessel, adjusted to the pressure of the receiver, are calculated using Equations 39 and 40 of this subpart.

$$V_{nc1} = \frac{VP_{nc_1}}{P_T} \qquad \text{(Eq. 39)}$$

$$V_{nc2} = \frac{VP_{nc_2}}{P_T} \qquad \text{(Eq. 40)}$$

Where:

V_{nc1} = initial volume of noncondensable gas in the vessel

V_{nc2} = final volume of noncondensable gas in the vessel

V = free volume in the vessel being depressurized

P_{nc1} = initial partial pressure of the noncondensable gas, as calculated using Equation 41 of this subpart

P_{nc2} = final partial pressure of the noncondensable gas, as calculated using Equation 42 of this subpart

P_T = pressure of the receiver

(*iii*) Initial and final partial pressures of the noncondensable gas in the vessel are determined using Equations 41 and 42 of this subpart.

$$P_{nc1} = P_1 - \sum_{j=1}^{m} P_j \qquad \text{(Eq. 41)}$$

$$P_{nc2} = P_2 - \sum_{j=1}^{m} P_j \qquad \text{(Eq. 42)}$$

Where:

P_{nc1} = initial partial pressure of the noncondensable gas in the vessel

P_{nc2} = final partial pressure of the noncondensable gas in the vessel

P_1 = initial vessel pressure

P_2 = final vessel pressure

P_j = partial pressure of each condensable compound (including HAP) in the vessel

m = number of condensable compounds (including HAP) in the emission stream

j = identifier for a condensable compound

(*5*) Emissions from vacuum systems shall be calculated using Equation 33 of this subpart.

(*6*) Emissions from gas evolution shall be calculated using Equation 12 with V calculated using Equation 34 of this subpart, T set equal to the receiver temperature, and the HAP partial pressures determined at the receiver temperature. The term for time, t, in Equation 12 of this subpart is not needed for the purposes of this calculation.

(*7*) Emissions from air drying shall be calculated using Equation 11 of this subpart with V equal to the air flow rate and P_i determined at the receiver temperature.

(*8*) Emissions from empty vessel purging shall be calculated using equation 43 of this subpart:

$$E = \frac{V}{R}\left(\left(\sum_{i=1}^{n}\frac{(P_i)_{T_1}(MW_i)}{T_1}\right)\left(-e^{-Ft/V}\right)-\left(\sum_{i=1}^{n}\frac{(P_i)_{T_2}(MW_i)}{T_2}\right)\left(\ln\left(\frac{\sum_{i=1}^{n}(P_i)_{T_2}}{\sum_{i=1}^{n}(P_i)_{T_1}}\right)+1\right)\right) \quad \text{(Eq. 43)}$$

Where:

V = volume of empty vessel

R = ideal gas law constant

T_1 = temperature of the vessel vapor space at beginning of purge

T_2 = temperature of the receiver, absolute

$(P_i)_{T1}$ = partial pressure of the individual HAP at the beginning of the purge

$(P_i)_{T2}$ = partial pressure of the individual HAP at the receiver temperature

MW_i = molecular weight of the individual HAP

F = flowrate of the purge gas

t = duration of the purge

n = number of HAP compounds in the emission stream

i = identifier for a HAP compound

(ii) *Large control devices.* Except for condensers, controlled emissions for each process vent that is controlled using a large control device shall be determined by applying the control efficiency of the large control device to the estimated uncontrolled emissions. The control efficiency shall be determined by conducting a performance test on the control device as described in paragraphs (d)(3)(ii)(A) through (C) of this section, or by using the results of a previous performance test as described in paragraph (d)(4) of this section. If the control device is intended to control only hydrogen halides and halogens, the owner or operator may assume the control efficiency of organic HAP is zero percent. If the control device is intended to control only organic HAP, the owner or operator may assume the control efficiency for hydrogen halides and halogen is zero percent. Owners and operators are not required to conduct performance tests for devices described in paragraphs (a)(4) and (d)(4) of this section that are large control devices, as defined in § 63.1251.

(A) The performance test shall be conducted by performing emission testing on the inlet and outlet of the control device following the test methods and procedures of § 63.1257(b). Concentrations shall be calculated from the data obtained through emission testing according to the procedures in paragraph (a)(2) of this section.

(B) Performance testing shall be conducted under absolute, or hypothetical worst-case conditions, as defined in paragraphs (b)(8)(i)(A) through (B) of this section.

(C) The owner or operator may elect to conduct more than one performance test on the control device for the purpose of establishing more than one operating condition at which the control device achieves the required control efficiency.

(iii) *Initial compliance demonstration for condensers.*

(A) *Air pollution control devices.* During periods in which a condenser functions as an air pollution control device, controlled emissions shall be calculated using the emission estimation equations described in paragraph (d)(3)(i)(B) of this section.

(B) *Process condensers.* During periods when the condenser is operating as a process condenser, the owner or operator is required to demonstrate that the process condenser is properly operated if the process condenser meets either of the criteria described in paragraphs (d)(3)(iii)(B)(*1*) and (*2*) of this section. The owner or operator must either measure the condenser exhaust gas temperature and show it is less than the boiling or bubble point of the substance(s) in the vessel, or perform a material balance around the vessel and condenser to show that at least 99 percent of the material vaporized while boiling is condensed. The initial demonstration shall be conducted for all appropriate operating scenarios and documented in the Notification of

Compliance Status report described in §63.1260(f).

(*1*) The process condenser is not followed by an air pollution control device; or

(*2*) The air pollution control device following the process condenser is not a condenser or is not meeting the alternative standard of §63.1254(c).

(4) An owner or operator is not required to conduct a performance test for the following:

(i) Any control device for which a previous performance test was conducted, provided the test was conducted using the same procedures specified in §63.1257(b) over conditions typical of the appropriate worst-case, as defined in §63.1257(b)(8)(i). The results of the previous performance test shall be used to demonstrate compliance.

(e) *Compliance with wastewater provisions.* (1) *Determining annual average concentration and annual load.* To determine the annual average concentration and annual load of partially soluble and/or soluble HAP compounds in a wastewater stream, as required by §63.1256(a)(1), an owner or operator shall comply with the provisions in paragraphs (e)(1)(i) through (iii) of this section. A wastewater stream is exempt from the requirements of §63.1256(a)(2) if the owner or operator determines the annual average concentration and annual load are below all of the applicability cutoffs specified in §63.1256(a)(1)(i)(A) through (D). For annual average concentration, only initial rinses are included. Concentration measurements based on Method 305 shall be adjusted by dividing each concentration by the compound-specific Fm factor listed in Table 8 of this subpart. Concentration measurements based on methods other than Method 305 may not be adjusted by the compound-specific Fm factor listed in Table 8 of this subpart.

(i) *Annual average concentration definition.* (A) When complying with §63.1256(a)(1)(i)(A), the annual average concentration means the total mass of partially soluble HAP compounds occurring in the wastewater stream during the calendar year divided by the total mass of the wastewater stream discharged during the same calendar year.

(B) When complying with §63.1256(a)(1)(i) (B) or (C), the annual average concentration means the total mass of partially soluble and/or soluble HAP compounds occurring in the wastewater stream during the calendar year divided by the total mass of the wastewater stream discharged during the same calendar year.

(C) When complying with §63.1256(a)(1)(i)(D), the annual average concentration means the total mass of soluble HAP compounds occurring in the wastewater stream during the calendar year divided by the total mass of the wastewater stream discharged during the same calendar year.

(ii) *Determination of annual average concentration.* An owner or operator shall determine annual average concentrations of partially soluble and/or soluble HAP compounds in accordance with the provisions specified in paragraph (e)(1)(ii)(A), (B), or (C) of this section. The owner or operator may determine annual average concentrations by process simulation. Data and other information supporting the simulation shall be reported in the Precompliance Report for approval by the Administrator. The annual average concentration shall be determined either at the POD or downstream of the POD with adjustment for concentration changes made according to paragraph (e)(1)(ii)(D) of this section.

(A) *Test methods.* The concentration of partially soluble HAP, soluble HAP, or total HAP shall be measured using any of the methods described in paragraphs (b)(10)(i) through (iv) of this section.

(B) *Knowledge of the wastewater stream.* The concentration of partially soluble HAP, soluble HAP, or total HAP shall be calculated based on knowledge of the wastewater stream according to the procedures in paragraphs (e)(1)(ii)(B)(*1*) and (*2*) of this section. The owner or operator shall document concentrations in the Notification of Compliance Status report described in §63.1260(f).

(*1*) *Mass balance.* The owner or operator shall calculate the concentrations of HAP compounds in wastewater considering the total quantity of HAP discharged to the water, the amount of water at the POD, and the amounts of

water and solvent lost to other mechanisms such as reactions, air emissions, or uptake in product or other processing materials. The quantities of HAP and water shall be based on batch sheets, manufacturing tickets, or FDA bills of materials. In cases where a chemical reaction occurs that generates or consumes HAP, the amount of HAP remaining after a reaction shall be based on stoichometry assuming 100 percent theoretical consumption or yield, as applicable.

(*2*) *Published water solubility data*. For single components in water, owners and operators may use the water solubilities published in standard reference texts at the POD temperature to determine maximum HAP concentration.

(C) *Bench scale or pilot-scale test data*. The concentration of partially soluble HAP, soluble HAP, or total HAP shall be calculated based on bench scale or pilot-scale test data. The owner or operator shall provide sufficient information to demonstrate that the bench-scale or pilot-scale test concentration data are representative of actual HAP concentrations. The owner or operator shall also provide documentation describing the testing protocol, and the means by which sample variability and analytical variability were accounted for in the determination of HAP concentrations. Documentation of the pilot-scale or bench scale analysis shall be provided in the precompliance report.

(D) *Adjustment for concentrations determined downstream of the POD*. The owner or operator shall make corrections to the annual average concentration when the concentration is determined downstream of the POD at a location where: two or more wastewater streams have been mixed; one or more wastewater streams have been treated; or, losses to the atmosphere have occurred. The owner or operator shall make the adjustments either to the individual data points or to the final annual average concentration.

(iii) *Determination of annual load*. An owner or operator shall calculate the partially soluble and/or soluble HAP load in a wastewater stream based on the annual average concentration determined in paragraph (e)(1)(ii) (A), (B), or (C) of this section and the total volume of the wastewater stream, based on knowledge of the wastewater stream in accordance with paragraphs (e)(1)(ii)(B) of this section. The owner or operator shall maintain records of the total liters of wastewater discharged per year as specified in § 63.1259(b).

(2) *Compliance with treatment unit control provisions*. (i) *Performance tests and design evaluations-general*. To comply with the control options in § 63.1256(g) (10) or (13), neither a design evaluation nor a performance test is required. For any other nonbiological treatment process, the owner or operator shall conduct either a design evaluation as specified in paragraph (e)(2)(ii) of this section, or a performance test as specified in paragraph (e)(2)(iii) of this section to demonstrate that each nonbiological treatment process used to comply with § 63.1256(g) (8), (9), and/or (12) achieves the conditions specified for compliance. The owner or operator shall demonstrate by the procedures in either paragraph (e)(2) (ii) or (iii) of this section that each closed biological treatment process used to comply with § 63.1256 (g)(8)(ii), (g)(9)(ii), (g)(11), or (g)(12) achieves the conditions specified for compliance. If an open biological treatment unit is used to comply with § 63.1256 (g)(8)(ii), (g)(9)(ii), (g)(11), or (g)(12), the owner or operator shall comply with the performance test requirements in paragraph (e)(2)(iii) of this section.

(ii) *Design evaluation*. A design evaluation and supporting documentation that addresses the operating characteristics of the treatment process and that is based on operation at a wastewater stream flow rate and a concentration under which it would be most difficult to demonstrate compliance. For closed biological treatment processes, the percent reduction from removal/destruction in the treatment unit and control device shall be determined by a mass balance over the unit. The mass flow rate of soluble and/or partially soluble HAP compounds exiting the treatment process shall be the sum of the mass flow rate of soluble and/or partially soluble HAP compounds in the wastewater stream

exiting the biological treatment process and the mass flow rate of the vented gas stream exiting the control device. The mass flow rate entering the treatment process minus the mass flow rate exiting the process determines the actual mass removal. Compounds that meet the requirements specified in paragraph (e)(2)(iii)(A)(*4*) of this section are not required to be included in the design evaluation; the term ''performance test'' in paragraph (e)(2)(iii)(A)(*4*) of this section shall mean ''design evaluation'' for the purposes of this paragraph.

(iii) *Performance tests.* Performance tests shall be conducted using test methods and procedures that meet the applicable requirements specified in paragraphs (e)(2)(iii)(A) through (G) of this section.

(A) *General.* This paragraph specifies the general procedures for performance tests that are conducted to demonstrate compliance of a treatment process with the control requirements specified in §63.1256(g).

(*1*) *Representative process unit operating conditions.* Compliance shall be demonstrated for representative operating conditions. Operations during periods of malfunction and periods of nonoperation shall not constitute representative conditions. The owner or operator shall record the process information that is necessary to document operating conditions during the test.

(*2*) *Representative treatment process operating conditions.* Performance tests shall be conducted when the treatment process is operating at a representative inlet flow rate and concentration. If the treatment process will be operating at several different sets of representative operating conditions, the owner or operator shall comply with paragraphs (e)(2)(iii)(A)(*2*)(*i*) and (*ii*) of this section. The owner or operator shall record information that is necessary to document treatment process or control device operating conditions during the test.

(*i*) *Range of operating conditions.* If the treatment process will be operated at several different sets of representative operating conditions, performance testing over the entire range is not required. In such cases, the performance test results shall be supplemented with modeling and/or engineering assessments to demonstrate performance over the operating range.

(*ii*) *Consideration of residence time.* If concentration and/or flow rate to the treatment process are not relatively constant (i.e., comparison of inlet and outlet data will not be representative of performance), the owner or operator shall consider residence time, when determining concentration and flow rate.

(*3*) *Testing equipment.* All testing equipment shall be prepared and installed as specified in the applicable test methods, or as approved by the Administrator.

(*4*) *Compounds not required to be considered in performance tests.* Compounds that meet the requirements specified in (e)(2)(iii)(A)(*4*)(*i*), (*ii*), or (*iii*) of this section are not required to be included in the performance test. Concentration measurements based on Method 305 shall be adjusted by dividing each concentration by the compound-specific Fm factor listed in Table 8 of this subpart. Concentration measurements based on methods other than Method 305 shall not be adjusted by the compound-specific Fm factor listed in Table 8 of this subpart.

(*i*) Compounds not used or produced by the PMPU; or

(*ii*) Compounds with concentrations at the POD that are below 1 ppmw; or

(*iii*) Compounds with concentrations at the POD that are below the lower detection limit where the lower detection limit is greater than 1 ppmw. The method shall be an analytical method for wastewater which has the compound of interest as a target analyte.

(*5*) *Treatment using a series of treatment processes.* In all cases where the wastewater provisions in this subpart allow or require the use of a treatment process to comply with emissions limitations, the owner or operator may use multiple treatment processes. The owner or operator complying with the requirements of §63.1256(g)(7)(i), when wastewater is conveyed by hard-piping, shall comply with either paragraph (e)(2)(iii)(A)(*5*)(*i*) or (*ii*) of this section. The owner or operator complying with the requirements of §63.1256(g)(7)(ii) shall comply with the requirements of paragraph (e)(2)(iii)(A)(*5*)(*ii*) of this section.

(*i*) The owner or operator shall conduct the performance test across each series of treatment processes. For each series of treatment processes, inlet concentration and flow rate shall be measured either where the wastewater enters the first treatment process in a series of treatment processes, or prior to the first treatment process as specified in paragraph (e)(2)(iii)(A)(*6*) of this section. For each series of treatment processes, outlet concentration and flow rate shall be measured where the wastewater exits the last treatment process in the series of treatment processes, except when the last treatment process is an open or a closed aerobic biological treatment process demonstrating compliance by using the procedures in paragraphs (e)(2)(iii)(E) or (F) of this section. When the last treatment process is either an open or a closed aerobic biological treatment process demonstrating compliance by using the procedures in paragraphs (e)(2)(iii)(E) or (F) of this section, inlet and outlet concentrations and flow rates shall be measured at the inlet and outlet to the series of treatment processes prior to the biological treatment process and at the inlet to the biological treatment process, except as provided in paragraph (e)(2)(iii)(A)(6)(ii) of this section. The mass flow rate destroyed in the biological treatment process for which compliance is demonstrated using paragraph (e)(2)(iii)(E) or (F) of this section shall be added to the mass flow rate removed or destroyed in the series of treatment units before the biological treatment unit. This sum shall be used to calculate the overall control efficiency.

(*ii*) The owner or operator shall conduct the performance test across each treatment process in the series of treatment processes. The mass flow rate removed or destroyed by each treatment process shall be added together and the overall control efficiency calculated to determine whether compliance has been demonstrated using paragraphs (e)(2)(iii)(C), (D), (E), (F), or (G) of this section, as applicable. If a biological treatment process is one of the treatment processes in the series of treatment processes, the inlet to the biological treatment process shall be the point at which the wastewater enters the biological treatment process, or the inlet to the equalization tank if all the criteria of paragraph (e)(2)(iii)(A)(*6*)(*ii*) of this section are met.

(*6*) The owner or operator determining the inlet for purposes of demonstrating compliance with paragraph (e)(2)(iii)(E), or (F)of this section may elect to comply with paragraph (e)(2)(iii)(A)(*6*)(*i*) or (*ii*) of this section.

(*i*) When wastewater is conveyed exclusively by hard-piping from the point of determination to a treatment process that is either the only treatment process or the first in a series of treatment processes (i.e., no treatment processes or other waste management units are used upstream of this treatment process to store, handle, or convey the wastewater), the inlet to the treatment process shall be at any location from the point of determination to where the wastewater stream enters the treatment process. When samples are taken upstream of the treatment process and before wastewater streams have converged, the owner or operator shall ensure that the mass flow rate of all affected wastewater is accounted for when using § 63.1256(g)(8)(ii), (g)(9)(ii) or (g)(12) of this subpart to comply and that the mass flow rate of all wastewater, not just affected wastewater, is accounted for when using § 63.1256(g)(11) to comply, except as provided in paragraph (e)(2)(iii)(A)(*4*) of this section.

(*ii*) The owner or operator may consider the inlet to the equalization tank as the inlet to the biological treatment process if the wastewater is conveyed by hard-piping from either the last previous treatment process or the point of determination to the equalization tank; or the wastewater is conveyed from the equalization tank exclusively by hard-piping to the biological treatment process and no treatment processes or other waste management units are used to store, handle, or convey the wastewater between the equalization tank and the biological treatment process; or the equalization tank is equipped with a fixed roof and a closed-vent system that routes emissions to a control device that meets the requirements of § 63.1256(b)(1)(i) through (iv)

and §63.1256(b)(2)(i). The outlet from the series of treatment processes prior to the biological treatment process is the point at which the wastewater exits the last treatment process in the series prior to the equalization tank, if the equalization tank and biological treatment process are part of a series of treatment processes. The owner or operator shall ensure that the mass flow rate of all affected wastewater is accounted for when using §63.1256(g)(9)(ii) or (12) to comply and that the mass flow rate of all wastewater, not just affected wastewater is accounted for when using §63.1256(g)(11) to comply, except as provided in paragraph (e)(2)(iii)(A)(*4*) of this section.

(B) *Noncombustion treatment process—concentration limits*. This paragraph applies to performance tests that are conducted to demonstrate compliance of a noncombustion treatment process with the ppmw wastewater stream concentration limits at the outlet of the treatment process. This compliance option is specified in §63.1256(g)(8)(i) and (9)(i). Wastewater samples shall be collected using sampling procedures which minimize loss of organic compounds during sample collection and analysis and maintain sample integrity per paragraph (b)(10)(vi) of this section. Samples shall be collected and analyzed using the procedures specified in paragraphs (b)(10)(i) through (vi) of this section. Samples may be grab samples or composite samples. Samples shall be taken at approximately equally spaced time intervals over a 1-hour period. Each 1-hour period constitutes a run, and the performance test shall consist of a minimum of three runs. Concentration measurements based on methods other than Method 305 may be adjusted by multiplying each concentration by the compound-specific Fm factor listed in Table 8 of this subpart. (For affected wastewater streams that contains both partially soluble and soluble HAP compounds, compliance is demonstrated only if the sum of the concentrations of partially soluble HAP compounds is less than 50 ppmw, and the sum of the concentrations of soluble HAP compounds is less than 520 ppmw.)

(C) *Noncombustion, nonbiological treatment process: percent mass removal/destruction option*. This paragraph applies to performance tests that are conducted to demonstrate compliance of a noncombustion, nonbiological treatment process with the percent mass removal limits specified in §63.1256(g)(8)(ii) and (9)(ii) for partially soluble and soluble HAP compounds, respectively. The owner or operator shall comply with the requirements specified in paragraphs (e)(2)(iii)(C)(*1*) through (*5*) of this section.

(*1*) *Concentration*. The concentration of partially soluble and/or soluble HAP compounds entering and exiting the treatment process shall be determined as provided in this paragraph. Wastewater samples shall be collected using sampling procedures which minimize loss of organic compounds during sample collection and analysis and maintain sample integrity per paragraph (b)(10)(vi) of this section. The method shall be an analytical method for wastewater which has the compound of interest as a target analyte. Samples may be grab samples or composite samples. Samples shall be taken at approximately equally spaced time intervals over a 1-hour period. Each 1-hour period constitutes a run, and the performance test shall consist of a minimum of three runs. Concentration measurements based on Method 305 shall be adjusted by dividing each concentration by the compound-specific Fm factor listed in Table 8 of this subpart. Concentration measurements based on methods other than Method 305 shall not be adjusted by the compound-specific Fm factor listed in Table 8 of this subpart.

(*2*) *Flow rate*. The flow rate of the entering and exiting wastewater streams shall be determined using inlet and outlet flow meters, respectively. Where the outlet flow is not greater than the inlet flow, a single flow meter may be used, and may be used at either the inlet or outlet. Flow rate measurements shall be taken at the same time as the concentration measurements.

(*3*) *Calculation of mass flow rate—for noncombustion, nonbiological treatment processes*. The mass flow rates of partially soluble and/or soluble HAP compounds entering and exiting the treatment process are calculated using Equations 44 and 45 of this subpart.

$$QMW_a = \frac{\rho}{p * 10^6}\left(\sum_{k=1}^{p}\left(Q_{a,k} * C_{T,a,k}\right)\right) \qquad \text{(Eq. 44)}$$

$$QMW_b = \frac{\rho}{p * 10^6}\left(\sum_{k=1}^{p}\left(Q_{b,k} * C_{T,b,k}\right)\right) \qquad \text{(Eq. 45)}$$

Where:

QMW_a, QMW_b = mass flow rate of partially soluble or soluble HAP compounds, average of all runs, in wastewater entering (QMW_a) or exiting (QMW_b) the treatment process, kg/hr

ρ = density of the wastewater, kg/m^3

$Q_{a,k}$, $Qb_{b,k}$ = volumetric flow rate of wastewater entering ($Q_{a,k}$) or exiting ($Q_{b,k}$) the treatment process during each run k, m^3/hr

$C_{T,a,k}$, $C_{T,b,k}$ = total concentration of partially soluble or soluble HAP compounds in wastewater entering ($C_{T,a,k}$) or exiting ($C_{T,b,k}$) the treatment process during each run k, ppmw

p = number of runs

k = identifier for a run

10^6 = conversion factor, mg/kg

(*4*) *Percent removal calculation for mass flow rate*. The percent mass removal across the treatment process shall be calculated as follows:

$$E = \frac{QMW_a - QMW_b}{QMW_a} \times 100 \qquad \text{(Eq. 46)}$$

Where:

E = removal or destruction efficiency of the treatment process, percent

QMW_a, QMW_b = mass flow rate of partially soluble or soluble HAP compounds in wastewater entering (QMW_a) and exiting (QMW_b) the treatment process, kg/hr (as calculated using Equations 44 and 45 of this subpart)

(*5*) *Compare mass removal efficiency to required efficiency*. Compare the mass removal efficiency (calculated in Equation 46 of this subpart) to the required efficiency as specified in § 63.1256(g)(8)(ii) or (9)(ii). If complying with § 63.1256(g)(8)(ii), compliance is demonstrated if the mass removal efficiency is 99 percent or greater. If complying with § 63.1256(g)(9)(ii), compliance is demonstrated if the mass removal efficiency is 90 percent or greater.

(D) *Combustion treatment processes: percent mass removal/destruction option*. This paragraph applies to performance tests that are conducted to demonstrate compliance of a combustion treatment process with the percent mass destruction limits specified in § 63.1256(g)(8)(ii) for partially soluble HAP compounds, and/or § 63.1256(g)(9)(ii) for soluble HAP compounds. The owner or operator shall comply with the requirements specified in paragraphs (e)(2)(iii)(D)(*1*) through (*8*) of this section.

(*1*) *Concentration in wastewater stream entering the combustion treatment process*. The concentration of partially soluble and/or soluble HAP compounds entering the treatment process shall be determined as provided in this paragraph. Wastewater samples shall be collected using sampling procedures which minimize loss of organic compounds during sample collection and analysis and maintain sample integrity per paragraph (b)(10)(vi) of this section. The method shall be an analytical method for wastewater which has the compound of interest as a target analyte. Samples may be grab samples or composite samples. Samples shall be taken at approximately equally spaced time intervals over a 1-hour period. Each 1-hour period constitutes a run, and the performance test shall consist of a minimum of three runs. Concentration measurements based on Method 305 of appendix A of this part shall be adjusted by dividing each concentration by the compound-specific Fm factor listed in Table 8 of this subpart. Concentration measurements based on methods other than Method

305 shall not be adjusted by the compound-specific Fm factor listed in Table 8 of this subpart.

(2) *Flow rate of wastewater entering the combustion treatment process.* The flow rate of the wastewater stream entering the combustion treatment process shall be determined using an inlet flow meter. Flow rate measurements shall be taken at the same time as the concentration measurements.

(3) *Calculation of mass flow rate in wastewater stream entering combustion treatment processes.* The mass flow rate of partially soluble and/or soluble HAP compounds entering the treatment process is calculated as follows:

$$QMW_a = \frac{\rho}{p * 10^6}\left(\sum_{k=1}^{p}\left(Q_{a,k} * C_{T,a,k}\right)\right) \qquad \text{(Eq. 47)}$$

Where:

QMW_a = mass flow rate of partially soluble or soluble HAP compounds entering the combustion unit, kg/hr

ρ = density of the wastewater stream, kg/m^3

$Q_{a,k}$ = volumetric flow rate of wastewater entering the combustion unit during run k, m^3/hr

$C_{T,a,k}$ = total concentration of partially soluble or soluble HAP compounds in the wastewater stream entering the combustion unit during run k, ppmw

ρ = number of runs

k = identifier for a run

p = number of runs

(4) *Concentration in vented gas stream exiting the combustion treatment process.* The concentration of partially soluble and/or soluble HAP compounds (or TOC) exiting the combustion treatment process in any vented gas stream shall be determined as provided in this paragraph. Samples may be grab samples or composite samples. Samples shall be taken at approximately equally spaced time intervals over a 1-hour period. Each 1-hour period constitutes a run, and the performance test shall consist of a minimum of three runs. Concentration measurements shall be determined using Method 18 of 40 CFR part 60, appendix A. Alternatively, any other test method validated according to the procedures in Method 301 of appendix A of this part may be used.

(5) *Volumetric flow rate of vented gas stream exiting the combustion treatment process.* The volumetric flow rate of the vented gas stream exiting the combustion treatment process shall be determined using Method 2, 2A, 2C, or 2D of 40 CFR part 60, appendix A, as appropriate. Volumetric flow rate measurements shall be taken at the same time as the concentration measurements.

(6) *Calculation of mass flow rate of vented gas stream exiting combustion treatment processes.* The mass flow rate of partially soluble and/or soluble HAP compounds in a vented gas stream exiting the combustion treatment process shall be calculated as follows:

$$QMG_b = K_2 * \left(\sum_{i=1}^{n}\left(CG_{b,i} * MW_i\right)\right) * QG_b \qquad \text{(Eq. 48)}$$

where:

QMG_b = mass rate of TOC (minus methane and ethane) or total partially soluble and/or soluble HAP, in vented gas stream, exiting (QMG_b) the combustion device, dry basis, kg/hr

$CG_{b,i}$ = concentration of TOC (minus methane and ethane) or total partially soluble and/or soluble HAP,

in vented gas stream, exiting ($CG_{b,i}$) the combustion device, dry basis, ppmv

MW_i = molecular weight of a component, kilogram/kilogram-mole

QG_b = flow rate of gas stream exiting (QG_b) the combustion device, dry standard cubic meters per hour

K_2 = constant, 41.57 x 10^{-9} (parts per million)$^{-1}$ (gram-mole per standard cubic meter) (kilogram/gram), where standard temperature (gram-mole per standard cubic meter) is 20 °C

i = identifier for a compound

n = number of components in the sample

(*7*) *Destruction efficiency calculation.* The destruction efficiency of the combustion unit for partially soluble and/or soluble HAP compounds shall be calculated as follows:

$$E = \frac{QMW_a - QMG_b}{QMW_a} * 100 \qquad \text{(Eq. 49)}$$

Where:

E = destruction efficiency of partially soluble or soluble HAP compounds for the combustion unit, percent

QMW^{2a} = mass flow rate of partially soluble or soluble HAP compounds entering the combustion unit, kg/hr

QMG_b = mass flow rate of TOC (minus methane and ethane) or partially soluble and/or soluble HAP compounds in vented gas stream exiting the combustion treatment process, kg/hr

(*8*) *Compare mass destruction efficiency to required efficiency.* Compare the mass destruction efficiency (calculated in Equation 49 of this subpart) to the required efficiency as specified in § 63.1256(g)(8)(ii) or (g)(9)(ii). If complying with § 63.1256(g)(8)(ii), compliance is demonstrated if the mass destruction efficiency is 99 percent or greater. If complying with § 63.1256(g)(9)(ii), compliance is demonstrated if the mass destruction efficiency is 90 percent or greater.

(E) *Open or closed aerobic biological treatment processes: 95-percent mass destruction option.* This paragraph applies to performance tests that are conducted for open or closed aerobic biological treatment processes to demonstrate compliance with the 95-percent mass destruction provisions in § 63.1256(g)(11) for partially soluble and/or soluble HAP compounds.

(*1*) *Concentration in wastewater stream.* The concentration of partially soluble and/or soluble HAP as provided in this paragraph. Concentration measurements to determine E shall be taken as provided in paragraph (e)(2)(iii)(A)(*5*) of this section for a series of treatment processes. Wastewater samples shall be collected using sampling procedures which minimize loss of organic compounds during sample collection and analysis and maintain sample integrity per paragraph (b)(10)(vi) of this section. The method shall be an analytical method for wastewater which has the compound of interest as a target analyte. Samples may be grab samples or composite samples. Samples shall be taken at approximately equally spaced time intervals over a 1-hour period. Each 1-hour period constitutes a run, and the performance test shall consist of a minimum of three runs. Concentration measurements based on Method 305 shall be adjusted by dividing each concentration by the compound-specific Fm factor listed in Table 8 of this subpart. Concentration measurements based on methods other than Method 305 shall not be adjusted by the compound-specific Fm factor listed in Table 8 of this subpart.

(*2*) *Flow rate.* Flow rate measurements to determine E shall be taken as provided in paragraph (e)(2)(iii)(A)(*5*) of this section for a series of treatment processes. Flow rate shall be determined using inlet and outlet flow measurement devices. Where the outlet flow is not greater than the inlet flow, a single flow measurement device may be used, and may be used at either the inlet or outlet. Flow rate measurements shall be taken at the same time as the concentration measurements.

(*3*) *Destruction efficiency.* The owner or operator shall comply with the provisions in either paragraph (e)(2)(iii)(E)(*3*)(*i*) or (*ii*) of this section. Compliance is demonstrated if the destruction efficiency, E, is equal to or greater than 95 percent.

(*i*) If the performance test is performed across the open or closed biological treatment system only, compliance is demonstrated if E is equal to F_{bio}, where E is the destruction efficiency of partially soluble and/or soluble HAP compounds and F_{bio} is the site-specific fraction of partially soluble and/or soluble HAP compounds biodegraded. F_{bio} shall be determined as specified in paragraph (e)(2)(iii)(E)(*4*) of this section and appendix C of subpart G of this part.

(*ii*) If compliance is being demonstrated in accordance with paragraphs (e)(2)(iii)(A)(*5*)(*i*) or (*ii*) of this section, the removal efficiency shall be calculated using Equation 50 of this subpart. When complying with paragraph (e)(2)(iii)(A)(*5*)(*i*) of this section, the series of nonbiological treatment processes comprise one treatment process segment. When complying with paragraph (e)(2)(iii)(A)(*5*)(*ii*) of this section, each nonbiological treatment process is a treatment process segment.

$$E = \frac{\text{Nonbiotreatment HAP load removal} + \text{Biotreatment HAP load removal}}{\text{Total influent HAP load}} = \frac{\left(\sum_{i=1}^{n}\left(QMW_{a,i} - QMW_{b,i}\right)\right) + QMW_{bio} * F_{bio}}{QMW_{all}} \quad \text{(Eq. 50)}$$

Where:

$QMW_{a,i}$ = the soluble and/or partially soluble HAP load entering a treatment process segment

$QMW_{b,i}$ = the soluble and/or partially soluble HAP load exiting a treatment process segment

n = the number of treatment process segments

i = identifier for a treatment process element

QMW_{bio} = the inlet load of soluble and/or partially soluble HAP to the biological treatment process. The inlet is defined in accordance with paragraph (e)(2)(iii)(A)(*6*) of this section. If complying with paragraph (e)(2)(iii)(A)(*6*)(*ii*) of this section, QMW_{bio} is equal to $QMW_{b,n}$

F_{bio} = site-specific fraction of soluble and/or partially soluble HAP compounds biodegraded. F_{bio} shall be determined as specified in paragraph (e)(2)(iii)(E)(*4*) of this section and Appendix C of subpart G of this part.

QMW_{all} = the total soluble and/or partially soluble HAP load to be treated.

(*4*) *Site-specific fraction biodegraded* (F_{bio}). The procedures used to determine the compound-specific kinetic parameters for use in calculating F_{bio} differ for the compounds listed in Tables 2 and 3 of this subpart. An owner or operator shall calculate F_{bio} as specified in either paragraph (e)(2)(iii)(E)(*4*)(*i*) or (*ii*) of this section.

(*i*) For biological treatment processes that do not meet the definition for enhanced biological treatment in § 63.1251, the owner or operator shall determine the F_{bio} for the compounds in Tables 2 and 3 of this subpart using any of the procedures in appendix C to part 63, except procedure 3 (inlet and outlet concentration measurements). (The symbol ''F_{bio}'' represents the site-specific fraction of an individual partially soluble or soluble HAP compound that is biodegraded.)

(*ii*) If the biological treatment process meets the definition of ''enhanced biological treatment process'' in § 63.1251, the owner or operator shall determine F_{bio} for the compounds in Table 2 of this subpart using any of the procedures specified in appendix C to part 63. The owner or operator shall calculate F_{bio} for the compounds in Table 3 of this subpart using the defaults for first order biodegradation rate constants (K_1) in Table 9 of this subpart and follow the procedure explained in Form III of appendix C, 40 CFR part 63, or any of the procedures specified in appendix C of 40 CFR part 63.

(F) *Open or closed aerobic biological treatment processes: percent removal for partially soluble or soluble HAP compounds.* This paragraph applies to the

use of performance tests that are conducted for open or closed aerobic biological treatment processes to demonstrate compliance with the percent removal provisions for either partially soluble HAP compounds in § 63.1256(g)(8)(ii) or soluble HAP compounds in § 63.1256(g)(9)(ii) or (g)(12). The owner or operator shall comply with the provisions in paragraph (e)(2)(iii)(E) of this section, except that compliance with § 63.1256(g)(8)(ii) shall be demonstrated when E is equal to or greater than 99 percent, compliance with § 63.1256(g)(9)(ii) shall be demonstrated when E is equal to or greater than 90 percent, and compliance with § 63.1256(g)(12) shall be demonstrated when E is equal to or greater than 99 percent.

(G) *Closed biological treatment processes: percent mass removal option.* This paragraph applies to the use of performance tests that are conducted for closed biological treatment processes to demonstrate compliance with the percent removal provisions in §§ 63.1256(g)(8)(ii), (g)(9)(ii), (g)(11), or (g)(12). The owner or operator shall comply with the requirements specified in paragraphs (e)(2)(iii)(G) (*1*) through (*4*) of this section.

(*1*) Comply with the procedures specified in paragraphs (e)(2)(iii)(C) (*1*) through (*3*) of this section to determine characteristics of the wastewater entering the biological treatment unit, except that the term ''partially soluble and/or soluble HAP'' shall mean ''soluble HAP'' for the purposes of this section if the owner or operator is complying with § 63.1256(g)(9)(ii) or (g)(12), and it shall mean ''partially soluble HAP'' if the owner or operator is complying with § 63.1256(g)(8)(ii).

(*2*) Comply with the procedures specified in paragraphs (e)(2)(iii)(D) (*4*) through (*6*) of this section to determine the characteristics of gas vent streams exiting a control device, with the differences noted in paragraphs (e)(2)(iii)(G)(*3*) (*i*) and (*ii*) of this section.

(*i*) The term ''partially soluble and/or soluble HAP'' shall mean ''soluble HAP'' for the purposes of this section if the owner or operator is complying with § 63.1256(g)(9)(ii) or (g)(12), and it shall mean ''partially soluble HAP'' if the owner or operator is complying with § 63.1256(g)(8)(ii).

(*ii*) The term ''combustion treatment process'' shall mean ''control device'' for the purposes of this section.

(*3*) *Percent removal/destruction calculation.* The percent removal and destruction across the treatment unit and any control device(s) shall be calculated using Equation 51 of this subpart:

$$E = \frac{\left(QMW_a - \left(QMW_b + QMG_b\right)\right)}{QMW_a} \qquad \text{(Eq. 51)}$$

Where:

E = removal and destruction efficiency of the treatment unit and control device(s), percent

QMW_a, QMW_b = mass flow rate of partially soluble and/or soluble HAP compounds in wastewater entering (QMW_a) and exiting (QMW_b) the treatment process, kilograms per hour (as calculated using Equations 44 and 45)

QMG_b = mass flow rate of partially soluble and/or soluble HAP compounds in vented gas stream exiting the control device, kg/hr

(*4*) *Compare mass removal/destruction efficiency to required efficiency.* Compare the mass removal/destruction efficiency (calculated using Equation 51 of this subpart) to the required efficiency as specified in § 63.1256(g)(8)(ii), (g)(9)(ii), (g)(11), or (g)(12). If complying with § 63.1256(g)(8)(ii), compliance is demonstrated if the mass removal/destruction is 99 percent or greater. If complying with § 63.1256(g)(9)(ii), compliance is demonstrated if the mass removal/destruction efficiency is 90 percent or greater. If complying with

§63.1256(g)(11), compliance is demonstrated if the mass removal/destruction efficiency is 95 percent or greater. If complying with §63.1256(g)(12), compliance is demonstrated if the mass removal/destruction efficiency is 99 percent or greater.

(3) *Compliance with control device provisions.* Except as provided in paragraph (e)(3)(iv) of this section, an owner or operator shall demonstrate that each control device or combination of control devices achieves the appropriate conditions specified in §63.1256(h)(2) by using one or more of the methods specified in paragraphs (e)(3)(i), (ii), or (iii) of this section.

(i) *Performance test for control devices other than flares.* This paragraph applies to performance tests that are conducted to demonstrate compliance of a control device with the efficiency limits specified in §63.1256(h)(2). If complying with the 95-percent reduction efficiency requirement, comply with the requirements specified in paragraphs (e)(3)(i) (A) through (J) of this section. If complying with the 20 ppm by volume requirement, comply with the requirements specified in paragraphs (e)(3)(i) (A) through (G) and (e)(3)(i)(J) of this section.

(A) *General.* The owner or operator shall comply with the general performance test provisions in paragraphs (e)(2)(iii)(A) (*1*) through (*4*) of this section, except that the term ''treatment unit'' shall mean ''control device'' for the purposes of this section.

(B) *Sampling sites.* Sampling sites shall be selected using Method 1 or 1A of 40 CFR part 60, appendix A, as appropriate. For determination of compliance with the 95 percent reduction requirement, sampling sites shall be located at the inlet and the outlet of the control device. For determination of compliance with the 20 ppmv limit, the sampling site shall be located at the outlet of the control device.

(C) *Concentration in gas stream entering or exiting the control device.* The concentration of total organic HAP or TOC in a gas stream shall be determined as provided in this paragraph. Samples may be grab samples or composite samples (i.e., integrated samples). Samples shall be taken at approximately equally spaced time intervals over a 1-hour period. Each 1-hour period constitutes a run, and the performance test shall consist of a minimum of three runs. Concentration measurements shall be determined using Method 18 of 40 CFR part 60, appendix A. Alternatively, any other test method validated according to the procedures in Method 301 of appendix A of this part may be used.

(D) *Volumetric flow rate of gas stream entering or exiting the control device.* The volumetric flow rate of the gas stream shall be determined using Method 2, 2A, 2C, or 2D of 40 CFR part 60, appendix A, as appropriate. Volumetric flow rate measurements shall be taken at the same time as the concentration measurements.

(E) *Calculation of TOC concentration.* The owner or operator shall compute TOC in accordance with the procedures in paragraph (a)(2) of this section.

(F) *Calculation of total organic HAP concentration.* The owner or operator determining compliance based on total organic HAP concentration shall compute the total organic HAP concentration in accordance with the provisions in paragraph (a)(2) of this section.

(G) *Requirements for combustion control devices.* If the control device is a combustion device, the owner or operator shall correct TOC and organic HAP concentrations to 3 percent oxygen in accordance with the provisions in paragraph (a)(3) of this section, and demonstrate initial compliance with the requirements for halogenated streams in accordance with paragraph (a)(6) of this section.

(H) *Mass rate calculation.* The mass rate of either TOC (minus methane and ethane) or total organic HAP for each sample run shall be calculated using the following equations. Where the mass rate of TOC is being calculated, all organic compounds (minus methane and ethane) measured by methods specified in paragraph (e)(3)(i)(C) of this section are summed using Equations 52 and 53 of this subpart. Where the mass rate of total organic HAP is being calculated, only soluble and partially soluble HAP compounds shall be summed using Equations 52 and 53.

$$QMG_a = K_2 * \left(\sum_{i=1}^{n} \left(CG_{a,i} \right) * \left(MW_i \right) \right) * QG_a \qquad \text{(Eq. 52)}$$

$$QMG_b = K_2 * \left(\sum_{i=1}^{n} \left(CG_{b,i} \right) * \left(MW_i \right) \right) * QG_b \qquad \text{(Eq. 53)}$$

Where:

$CG_{a,i}$, $CG_{b,i}$ = concentration of TOC or total organic HAP, in vented gas stream, entering ($CG_{a,i}$) and exiting ($CG_{b,i}$) the control device, dry basis, ppmv

QMG_a, QMG_b = mass rate of TOC or total organic HAP, in vented gas stream, entering (QMG_a) and exiting (QMG_b) the control device, dry basis, kg/hr

M_{wi} = molecular weight of a component, kilogram/kilogram-mole

QG_a,QG_b = flow rate of gas stream entering (QG_a) and exiting (QG_b) the control device, dry standard cubic meters per hour

K_2 = constant, 41.57×10^{-9} (parts per million)$^{-1}$ (gram-mole per standard cubic meter) (kilogram/gram), where standard temperature (gram-mole per standard cubic meter) is 20 °C

i = identifier for a compound

n = number of components in the sample

(I) *Percent reduction calculation*. The percent reduction in TOC or total organic HAP for each sample run shall be calculated using Equation 54 of this subpart:

$$E = \frac{QMG_a - QMG_b}{QMG_a} (100\%) \qquad \text{(Eq. 54)}$$

where:

E = destruction efficiency of control device, percent

QMG_a,QMG_b = mass rate of TOC or total organic HAP, in vented gas stream entering and exiting (QMG_b) the control device, dry basis, kilograms per hour

(J) *Compare mass destruction efficiency to required efficiency*. If complying with the 95-percent reduction efficiency requirement, compliance is demonstrated if the mass destruction efficiency (calculated in Equation 51 of this subpart) is 95 percent or greater. If complying with the 20 ppmv limit, compliance is demonstrated if the outlet TOC concentration is 20 ppmv, or less.

(ii) *Design evaluation*. A design evaluation conducted in accordance with the provisions in paragraph (a)(1) of this section. Compounds that meet the requirements specified in paragraph (e)(2)(iii)(A)(4) of this section are not required to be included in the design evaluation.

(iii) *Compliance demonstration for flares*. When a flare is used to comply with § 63.1256(h), the owner or operator shall comply with the flare provisions in § 63.11(b). An owner or operator is not required to conduct a performance test to determine percent emission reduction or outlet organic HAP or TOC concentration when a flare is used.

(iv) *Exemptions from compliance demonstrations*. An owner or operator using any control device specified in paragraph (a)(4) of this section is exempt from the requirements in paragraphs (e)(3)(i) through (e)(3)(iii) of this section and from the requirements in § 63.6(f).

(f) *Pollution prevention alternative standard*. The owner or operator shall demonstrate compliance with § 63.1252(e)(2) using the procedures described in paragraph (f)(1) and (f)(3) of this section. The owner or operator shall demonstrate compliance with § 63.1252(e)(3) using the procedures described in paragraphs (f)(2) and (f)(3) of this section.

(1) Compliance is demonstrated when the annual kg/kg factor, calculated according to the procedure in paragraphs (f)(1)(i) and (iii) of this section, is reduced by at least 75 percent as calculated according to the procedure in paragraph (f)(1)(i) and (ii) of this section.

(i) The production-indexed HAP consumption factors shall be calculated by dividing annual consumption of total HAP by the annual production rate, per process. The production-indexed total VOC consumption factor shall be calculated by dividing annual consumption of total VOC by the annual production rate, per process.

(ii) The baseline factor is calculated from yearly production and consumption data for the first 3-year period in which the PMPU was operational, beginning no earlier than the 1987 calendar year, or for a minimum period of 12 months from startup of the process until the present in which the PMPU was operational and data are available, beginning no earlier than the 1987 calendar year.

(iii) The annual factor is calculated on the following bases:

(A) For continuous processes, the annual factor shall be calculated every 30 days for the 12-month period preceding the 30th day (30-day rolling average).

(B) For batch processes, the annual factor shall be calculated either every 10 batches for the 12-month period preceding the 10th batch (10-batch rolling average) or a maximum of once per month, if the number of batches is greater than 10 batches per month. The annual factor shall be calculated every 5 batches if the number of batches is less than 10 for the 12-month period preceding the 10th batch and shall be calculated every year if the number of batches is less than 5 for the 12-month period preceding the 5th batch.

(2) Compliance is demonstrated when the requirements of paragraphs (f)(2)(i) through (iv) of this section are met.

(i) The annual kg/kg factor, calculated according to the procedure in paragraphs (f)(1)(i) and (f)(1)(iii) of this section, is reduced to a value equal to or less than 50 percent of the baseline factor calculated according to the procedure in paragraphs (f)(1)(i) and (ii) of this section.

(ii) The yearly reductions associated with add-on controls that meet the criteria of §§ 63.1252(h)(3)(ii)(A) through (D) must be equal to or greater than the amounts calculated in paragraphs (f)(2)(ii)(A) and (B) of this section:

(A) The mass of HAP calculated using Equation 55 of this subpart:

$$M = [kg/kg]_b (0.75 - P_R)(M_{prod}) \qquad \text{(Eq. 55)}$$

Where:

$[kg/kg]_b$ = the baseline production-indexed HAP consumption factor, in kg/kg

M_{prod} = the annual production rate, in kg/yr

M = the annual reduction required by add-on controls, in kg/yr

P_R = the fractional reduction in the annual kg/kg factor achieved using pollution prevention where P_R is ≥0.5

(B) The mass of VOC calculated using Equation 56 of this subpart:

$$VOC_{reduced} = (VF_{base} - VF_P - VF_{annual}) \times M_{prod} \qquad \text{(Eq. 56)}$$

Where:

$VOC_{reduced}$ = required VOC emission reduction from add-on controls, kg/yr

VF_{base} = baseline VOC factor, kg VOC emitted/kg production

VF_p = reduction in VOC factor achieved by pollution prevention, kg VOC emitted/kg production

VF_{annual} = target annual VOC factor, kg VOC emitted/kg production

M_{prod} = production rate, kg/yr

(iii) Demonstration that the criteria in § 63.1252(e)(3)(ii)(A) through (D) are met shall be accomplished through a description of the control device and of the material streams entering and exiting the control device.

(iv) The annual reduction achieved by the add-on control shall be quantified using the methods described in § 63.1257(d).

(3) Each owner or operator of a PMPU complying with the P2 standard shall prepare a P2 demonstration summary that shall contain, at a minimum, the following information:

(i) Descriptions of the methodologies and forms used to measure and record daily consumption of HAP compounds reduced as part of the P2 standard.

(ii) Descriptions of the methodologies and forms used to measure and record daily production of products which are included in the P2 standard.

(iii) Supporting documentation for the descriptions provided in paragraphs (f)(3)(i) and (ii) including, but not limited to, operator log sheets and copies of daily, monthly, and annual inventories of materials and products.

(g) *Compliance with storage tank provisions by using emissions averaging.* An owner or operator with two or more affected storage tanks may demonstrate compliance with § 63.1253, as applicable, by fulfilling the requirements of paragraphs (g)(1) through (4) of this section.

(1) The owner or operator shall develop and submit for approval an Implementation Plan containing all the information required in § 63.1259(e) 6 months prior to the compliance date of the standard. The Administrator shall have 90 days to approve or disapprove the emissions averaging plan after which time the plan shall be considered approved.

(2) The annual mass rate of total organic HAP (E^{Ti}, E^{To}) shall be calculated for each storage tank included in the emissions average using the procedures specified in paragraph (c)(1), (2), or (3) of this section.

(3) Equations 57 and 58 of this subpart shall be used to calculate total HAP emissions for those tanks subject to § 63.1253(b) or (c):

$$E_{Ti} = \sum_{j=1}^{n} E_{ij} \qquad \text{(Eq. 57)}$$

$$E_{To} = \sum_{j=1}^{n} E_{oj} \qquad \text{(Eq. 58)}$$

Where:

E_{ij} = yearly mass rate of total HAP at the inlet of the control device for tank j

E_{oj} = yearly mass rate of total HAP at the outlet of the control device for tank j

ET_i = total yearly uncontrolled HAP emissions

E_{To} = total yearly actual HAP emissions

$_n$ = number of tanks included in the emissions average

(4) The overall percent reduction efficiency shall be calculated as follows:

$$R = \frac{E_{Ti} - D\,E_{To}}{E_{Ti}} 100\% \qquad \text{(Eq. 59)}$$

where:

R = overall percent reduction efficiency

D = discount factor = 1.1 for all controlled storage tanks

(h) *Compliance with process vent provisions by using emissions averaging.* An owner or operator with two or more affected processes complying with § 63.1254 by using emissions averaging shall demonstrate compliance with paragraphs (h)(1), (2) and (3) of this section.

(1) The owner or operator shall develop and submit for approval an Implementation Plan at least 6 months prior to the compliance date of the standard containing all the information required in § 63.1259(e). The Administrator shall have 90 days to approve or disapprove the emissions averaging plan. The plan shall be considered approved if the Administrator either approves the plan in writing, or fails to disapprove the plan in writing. The 90-day period shall begin when the Administrator receives the request. If the request is denied, the owner or operator must still be in compliance with the standard by the compliance date.

(2) Owners or operators shall calculate uncontrolled and controlled emissions of HAP by using the methods specified in paragraph (d)(2) and (3) of this section for each process included in the emissions average.

(3) Equations 60 and 61 of this subpart shall be used to calculate total HAP emissions:

$$E_{TU} = \sum_{i=1}^{n} E_{Ui} \qquad \text{(Eq. 60)}$$

$$E_{TC} = \sum_{i=1}^{n} E_{Ci} \qquad \text{(Eq. 61)}$$

Where:

E_{Ui} = yearly uncontrolled emissions from process i.

E_{Ci} = yearly actual emissions for process i.

E_{TU} = total yearly uncontrolled emissions.

E_{TC} = total yearly actual emissions.

n = number of processes included in the emissions average.

(4) The overall percent reduction efficiency shall be calculated using Equation 62 of this subpart:

$$R = \frac{E_{TU} - D\,E_{TC}}{E_{TU}}(100\%) \qquad \text{(Eq. 62)}$$

where:

R = overall percent reduction efficiency

D = discount factor = 1.1 for all controlled emission points

[63 FR 50326, Sept. 21, 1998, as amended at 65 FR 52609, Aug. 29, 2000; 66 FR 40134, Aug. 2, 2001]

§63.1258 Monitoring Requirements.

(a) The owner or operator of any existing, new, or reconstructed affected source shall provide evidence of continued compliance with the standard as specified in this section. During the initial compliance demonstration, maximum or minimum operating parameter levels, as appropriate, shall be established for emission sources that will indicate the source is in compliance. Test data, calculations, or information from the evaluation of the control device design shall be used to establish the operating parameter level.

(b) *Monitoring for control devices.* (1) *Parameters to monitor.* Except as specified in paragraph (b)(1)(i) of this section, for each control device, the owner or operator shall install and operate monitoring devices and operate within the established parameter levels to ensure continued compliance with the standard. Monitoring parameters are specified for control scenarios in Table 4 of this subpart and in paragraphs (b)(1)(ii) through (xi) of this section.

(i) *Periodic verification.* For control devices that control vent streams totaling less than 1 ton/yr HAP emissions, before control, monitoring shall consist of a daily verification that the device is operating properly. If the control device is used to control batch process vents alone or in combination with other streams, the verification may be on a per batch basis. This verification shall include, but not be limited to, a daily or per batch demonstration that the unit is working as designed and may include the daily measurements of the parameters described in (b)(1)(ii) through (x) of this section. This demonstration shall be included in the Precompliance report, to be submitted 6 months prior to the compliance date of the standard.

(ii) *Scrubbers.* For affected sources using liquid scrubbers, the owner or operator shall establish a minimum scrubber liquid flow rate or pressure drop as a site-specific operating parameter which must be measured and recorded every 15 minutes during the period in which the scrubber is functioning in achieving the HAP removal required by this subpart. If the scrubber uses a caustic solution to remove acid emissions, the owner or operator shall establish a minimum pH of the effluent scrubber liquid as a site-specific operating parameter which must be monitored at least once a day. The minimum scrubber flowrate or pressure drop shall be based on the conditions anticipated under worst-case conditions, as defined in §63.1257(b)(8)(i).

(A) The monitoring device used to determine the pressure drop shall be certified by the manufacturer to be accurate to within a gage pressure of ±10 percent of the maximum pressure drop measured.

(B) The monitoring device used for measurement of scrubber liquid flowrate shall be certified by the manufacturer to be accurate within ±10 percent of the design scrubber liquid flowrate.

(C) The monitoring device shall be calibrated annually.

(iii) *Condensers.* For each condenser, the owner or operator shall establish the maximum condenser outlet gas temperature as a site-specific operating parameter which must be measured and recorded at least every 15 minutes during the period in which the condenser is functioning in achieving the HAP removal required by this subpart.

(A) The temperature monitoring device must be accurate to within ±2 percent of the temperature measured in degrees Celsius or ±2.5 °C, whichever is greater.

(B) The temperature monitoring device must be calibrated annually.

(iv) *Regenerative carbon adsorbers.* For each regenerative carbon adsorber, the owner or operator shall comply with the provisions in paragraphs (b)(1)(iv)(A) through (F) of this section.

(A) Establish the regeneration cycle characteristics specified in paragraphs (b)(1)(iv)(A)(*1*) through (*4*) of this section under worst-case conditions, as defined in § 63.1257(b)(8)(i).

(*1*) Minimum regeneration frequency (i.e., operating time since last regeneration);

(*2*) Minimum temperature to which the bed is heated during regeneration;

(*3*) Maximum temperature to which the bed is cooled, measured within 15 minutes of completing the cooling phase; and

(*4*) Minimum regeneration stream flow.

(B) Monitor and record the regeneration cycle characteristics specified in paragraphs (b)(1)(iv)(B)(*1*) through (*4*) of this section for each regeneration cycle.

(*1*) Regeneration frequency (operating time since end of last regeneration);

(*2*) Temperature to which the bed is heated during regeneration;

(*3*) Temperature to which the bed is cooled, measured within 15 minutes of the completion of the cooling phase; and

(*4*) Regeneration stream flow.

(C) Use a temperature monitoring device that is accurate to within ±2 percent of the temperature measured in degrees Celsius or ± 2.5 °C, whichever is greater.

(D) Use a regeneration stream flow monitoring device capable of recording the total regeneration stream flow to within ± 10 percent of the established value (i.e., accurate to within ± 10 percent of the reading).

(E) Calibrate the temperature and flow monitoring devices annually.

(F) Conduct an annual check for bed poisoning in accordance with manufacturer's specifications.

(v) *Nonregenerative carbon adsorbers.* For each nonregenerative carbon adsorber, the owner or operator shall establish and monitor the maximum time interval between replacement based on the conditions anticipated under worst-case, as defined in § 63.1257(b)(8)(i).

(vi) *Flares.* For each flare, the presence of the pilot flame shall be monitored every 15 minutes during the period in which the flare is functioning in achieving the HAP removal required by this subpart.

(vii) *Thermal incinerators.* For each thermal incinerator, the owner or operator shall establish the minimum temperature of the gases exiting the combustion chamber as the site-specific operating parameter which must be measured and recorded at least once every 15 minutes during the period in which the combustion device is functioning in achieving the HAP removal required by this subpart.

(A) The temperature monitoring device must be accurate to within ± 0.75 percent of the temperature measured in degrees Celsius or ± 2.5 °C, whichever is greater.

(B) The monitoring device must be calibrated annually.

(viii) *Catalytic incinerators.* For each catalytic incinerator, the owner or operator shall monitor the temperature of the gas stream immediately before and after the catalyst bed. The owner or operator shall establish the minimum temperature of the gas stream immediately before the catalyst bed and the minimum temperature difference across the catalyst bed as the site-specific operating parameter which must be monitored and recorded at leastonce every 15 minutes during the period in which the catalytic incinerator is functioning in achieving the HAP removal required by this subpart.

(A) The temperature monitoring devices must be accurate to within ± 0.75 percent of the temperature measured in degrees Celsius or ± 2.5 °C, whichever is greater.

(B) The temperature monitoring devices must be calibrated annually.

(ix) *Process heaters and boilers.* (A) Except as specified in paragraph (b)(1)(ix)(B) of this section, for each boiler or process heater, the owner or

operator shall establish the minimum temperature of the gases exiting the combustion chamber as the site-specific operating parameter which must be monitored and recorded at least once every 15 minutes during the period in which the boiler or process heater is functioning in achieving the HAP removal required by this subpart.

(*1*) The temperature monitoring device must be accurate to within ±0.75 percent of the temperature measured in degrees Celsius or ±2.5 °C, whichever is greater.

(*2*) The temperature monitoring device must be calibrated annually.

(B) The owner or operator is exempt from the monitoring requirements specified in paragraph (b)(1)(ix)(A) of this section if either:

(*1*) All vent streams are introduced with primary fuel; or

(*2*) The design heat input capacity of the boiler or process heater is 44 megawatts or greater.

(x) *Continuous emission monitor*. As an alternative to the parameters specified in paragraphs (b)(1)(ii) through (ix) of this section, an owner or operator may monitor and record the outlet HAP concentration or both the outlet TOC concentration and outlet hydrogen halide and halogen concentration every 15 minutes during the period in which the control device is functioning in achieving the HAP removal required by this subpart. The owner or operator need not monitor the hydrogen halide and halogen concentration if, based on process knowledge, the owner or operator determines that the emission stream does not contain hydrogen halides or halogens. The HAP or TOC monitor must meet the requirements of Performance Specification 8 or 9 of appendix B of part 60 and must be installed, calibrated, and maintained, according to §63.8. As part of the QA/QC Plan, calibration of the device must include, at a minimum, quarterly cylinder gas audits.

(xi) *CVS visual inspections*. The owner or operator shall perform monthly visual inspections of each closed vent system as specified in §63.1252(b).

(2) *Averaging periods*. Averaging periods for parametric monitoring levels shall be established according to paragraphs (b)(2)(i) through (iii) of this section.

(i) Except as provided in paragraph (b)(2)(iii) of this section, a daily (24-hour) or block average shall be calculated as the average of all values for a monitored parameter level set according to the procedures in (b)(3)(iii) of this section recorded during the operating day or block.

(ii) The operating day or block shall be defined in the Notification of Compliance Status report. The daily average may be from midnight to midnight or another continuous 24-hour period. The block average is limited to a period of time that is, at a maximum, equal to the time from the beginning to end of a batch process.

(iii) Monitoring values taken during periods in which the control devices are not functioning in controlling emissions, as indicated by periods of no flow, shall not be considered in the averages. Where flow to the device could be intermittent, the owner or operator shall install, calibrate and operate a flow indicator at the inlet or outlet of the control device to identify periods of no flow.

(3) *Procedures for setting parameter levels for control devices used to control emissions*. (i) *Small control devices*. Except as provided in paragraph (b)(1)(i) of this section, for devices controlling less than 10 tons per year of HAP for which a performance test is not required, the parametric levels shall be set based on the design evaluation required in §63.1257(d)(3)(i). If a performance test is conducted, the monitoring parameter level shall be established according to the procedures in (b)(3)(ii) of this section.

(ii) *Large control devices*. For devices controlling greater than 10 tons per year of HAP for which a performance test is required, the parameter level must be established as follows:

(A) If the operating parameter level to be established is a maximum, it must be based on the average of the values from each of the three test runs.

(B) If the operating parameter level to be established is a minimum, it must be based on the average of the values from each of the three test runs.

(C) The owner or operator may establish the parametric monitoring level(s)

based on the performance test supplemented by engineering assessments and manufacturer's recommendations. Performance testing is not required to be conducted over the entire range of expected parameter values. The rationale for the specific level for each parameter, including any data and calculations used to develop the level(s) and a description of why the level indicates proper operation of the control device shall be provided in the Precompliance report. The procedures specified in this section have not been approved by the Administrator and determination of the parametric monitoring level using these procedures is subject to review and approval by the Administrator.

(iii) *Parameters for control devices controlling batch process vents.* For devices controlling batch process vents alone or in combination with other streams, the parameter level(s) shall be established in accordance with paragraph (b)(3)(iii)(A) or (B) of this section.

(A) If more than one batch emission episode has been selected to be controlled, a single level for the batch process(es) shall be determined from the initial compliance demonstration.

(B) Instead of establishing a single level for the batch process(es), as described in paragraph (b)(3)(iii)(A) of this section, an owner or operator may establish separate levels for each batch emission episode, selected to be controlled. If separate monitoring levels are established, the owner or operator must provide a record indicating at what point in the daily schedule or log of processes required to be recorded per the requirements of § 63.1259(b)(9) the parameter being monitored changes levels and must record at least one reading of the new parameter level, even if the duration of monitoring for the new parameter is less than 15-minutes.

(4) *Request approval to monitor alternative parameters.* An owner or operator may request approval to monitor parameters other than those required by paragraphs (b)(1)(ii) through (ix) of this section. The request shall be submitted according to the procedures specified in § 63.8(f) or included in the Precompliance report.

(5) *Monitoring for the alternative standards.* (i) For control devices that are used to comply with the provisions of § 63.1253(d) or § 63.1254(c), the owner or operator shall monitor and record the outlet TOC concentration and the outlet hydrogen halide and halogen concentration every 15 minutes during the period in which the device is functioning in achieving the HAP removal required by this subpart using CEMS as specified in paragraphs (b)(5)(i)(A) through (D) of this section.

(A) A TOC monitor meeting the requirements of EPA Performance Specification 8, 9, or 15 of appendix B of 40 CFR part 60 shall be installed, calibrated, and maintained according to § 63.8.

(B) Except as specified in paragraphs (b)(5)(i)(C) and (D) of this section, the owner or operator must monitor HCl using either a FTIR CEMS that meets Performance Specification 15 of appendix B of part 60 or any other CEMS capable of measuring HCl for which a performance specification has been promulgated in appendix B of part 60. To monitor HCl with a CEMS for which a performance specification has not been promulgated, the owner or operator must prepare a monitoring plan and submit it for approval in accordance with the procedures specified in § 63.8.

(C) As an alternative to using a CEMS as specified in paragraph (b)(5)(i)(B) of this section to monitor halogenated vent streams that are controlled by a combustion device followed by a scrubber, the owner or operator may elect to monitor scrubber operating parameters as specified in paragraph (b)(1)(ii) of this section that demonstrate the HCl emissions are reduced by at least 95 percent by weight.

(D) The owner or operator need not monitor the hydrogen halide and halogen concentration if, based on process knowledge, the owner or operator determines that the emission stream does not contain hydrogen halides or halogens.

(ii) An owner or operator complying with the alternative standard using control devices in which supplemental gases are added to the vents or manifolds must either correct for supplemental gases as specified in

§63.1257(a)(3) or comply with the requirements of paragraph (b)(5)(ii)(A) or (B) of this section. If the owner or operator corrects for supplemental gases as specified in §63.1257(a)(3)(ii) for noncombustion control devices, the flow rates must be evaluated as specified in paragraph (b)(5)(ii)(C) of this section.

(A) *Provisions for combustion devices.* As an alternative to correcting for supplemental gases as specified in §63.1257(a)(3), the owner or operator may monitor residence time and firebox temperature according to the requirements of paragraphs (b)(5)(ii)(A)(*1*) and (*2*) of this section. Monitoring of residence time may be accomplished by monitoring flowrate into the combustion chamber.

(*1*) If complying with the alternative standard instead of achieving a control efficiency of 95 percent or less, the owner or operator must maintain a minimum residence time of 0.5 seconds and a minimum combustion chamber temperature of 760 °C.

(*2*) If complying with the alternative standard instead of achieving a control efficiency of 98 percent, the owner or operator must maintain a minimum residence time of 0.75 seconds and a minimum combustion chamber temperature of 816 °C.

(B) *Provisions for dense gas systems.* As an alternative to correcting for supplemental gases as specified in §63.1257(a)(3), for noncombustion devices used to control emissions from dense gas systems, as defined in §63.1251, the owner or operator shall monitor flowrate as specified in paragraphs (b)(5)(ii)(B)(*1*) through (*4*) of this section.

(*1*) Use Equation 63 of this subpart to calculate the system flowrate setpoint at which the average concentration is 5,000 ppmv TOC:

$$F_s = \frac{721 \times E_{an}}{5{,}000} \qquad \text{(Eq. 63)}$$

Where:

F_s = system flowrate setpoint, scfm

E_{an} = annual emissions entering the control device, lbmols/yr

(*2*) Annual emissions used in Equation 63 of this subpart must be based on the actual mass of organic compounds entering the control device, as calculated from the most representative emissions inventory data submitted within the 5 years before the Notification of Compliance Status report is due. The owner or operator must recalculate the system flowrate setpoint once every 5 years using the annual emissions from the most representative emissions inventory data submitted during the 5-year period after the previous calculation. Results of the initial calculation must be included in the Notification of Compliance Status report, and recalculated values must be included in the next Periodic report after each recalculation. For all calculations after the initial calculation, to use emissions inventory data calculated using procedures other than those specified in §63.1257(d), the owner or operator must submit the emissions inventory data calculations and rationale for their use in the Notification of Process Change report or an application for a part 70 permit renewal or revision.

(*3*) In the Notification of Compliance Status report, the owner or operator may elect to establish both a maximum daily average operating flowrate limit above the flowrate setpoint and a reduced outlet concentration limit corresponding to this flowrate limit. The owner or operator may also establish reduced outlet concentration limits for any daily average flowrates between the flowrate setpoint and the flowrate limit. The correlation between these elevated flowrates and the corresponding outlet concentration limits must be established using Equation 64 of this subpart:

$$C_a = \frac{F_s}{F_a} \times 50 \qquad \text{(Eq. 64)}$$

Where:

C_a = adjusted outlet concentration limit, dry basis, ppmv

50 = outlet concentration limit associated with the flowrate setpoint, dry basis, ppmv

F_s = system flowrate setpoint, scfm

F_a = actual system flowrate limit, scfm

(*4*) The owner or operator must install and operate a monitoring system for measuring system flowrate. The flowrate into the control device must be monitored and recorded at least

once every hour. The system flowrate must be calculated as the average of all values measured during each 24-hour operating day. The flowrate monitoring device must be accurate to within 5 percent of the system flowrate setpoint, and the flowrate monitoring device must be calibrated annually.

(C) *Flow rate evaluation for noncombustion devices.* To demonstrate continuous compliance with the requirement to correct for supplemental gases as specified in § 63.1257(a)(3)(ii) for noncombustion devices, the owner or operator must evaluate the volumetric flow rate of supplemental gases, V_s, and the volumetric flow rate of all gases, V_a, each time a new operating scenario is implemented based on process knowledge and representative operating data. The procedures used to evaluate the flow rates, and the resulting correction factor used in Equation 7B of this subpart, must be included in the Notification of Compliance Status report and in the next Periodic report submitted after an operating scenario change.

(6) *Exceedances of operating parameters.* An exceedance of an operating parameter is defined as one of the following:

(i) If the parameter, averaged over the operating day or block, is below a minimum value established during the initial compliance demonstration.

(ii) If the parameter, averaged over the operating day or block, is above the maximum value established during the initial compliance demonstration.

(iii) Each loss of all pilot flames for flares.

(7) *Excursions.* Excursions are defined by either of the two cases listed in paragraphs (b)(7)(i) or (ii) of this section.

(i) When the period of control device operation is 4 hours or greater in an operating day and monitoring data are insufficient to constitute a valid hour of data, as defined in paragraph (b)(7)(iii) of this section, for at least 75 percent of the operating hours.

(ii) When the period of control device operation is less than 4 hours in an operating day and more than one of the hours during the period of operation does not constitute a valid hour of data due to insufficient monitoring data.

(iii) Monitoring data are insufficient to constitute a valid hour of data, as used in paragraphs (b)(7)(i) and (ii) of this section, if measured values are unavailable for any of the required 15-minute periods within the hour.

(8) *Violations.* Exceedances of parameters monitored according to the provisions of paragraphs (b)(1)(ii), (iv) through (ix), and (b)(5)(ii)(A) and (B) of this section, or excursions as defined by paragraphs (b)(7)(i) through (iii) of this section, constitute violations of the operating limit according to paragraphs (b)(8)(i), (ii), and (iv) of this section. Exceedances of the temperature limit monitored according to the provisions of paragraph (b)(1)(iii) of this section or exceedances of the outlet concentrations monitored according to the provisions of paragraph (b)(1)(x) of this section constitute violations of the emission limit according to paragraphs (b)(8)(i), (ii), and (iv) of this section. Exceedances of the outlet concentrations monitored according to the provisions of paragraph (b)(5) of this section constitute violations of the emission limit according to the provisions of paragraphs (b)(8)(iii) and (iv) of this section.

(i) Except as provided in paragraph (b)(8)(iv) of this section, for episodes occurring more than once per day, exceedances of established parameter limits or excursions will result in no more than one violation per operating day for each monitored item of equipment utilized in the process.

(ii) Except as provided in paragraph (b)(8)(iv) of this section, for control devices used for more than one process in the course of an operating day, exceedances or excursions will result in no more than one violation per operating day, per control device, for each process for which the control device is in service.

(iii) Except as provided in paragraph (b)(8)(iv) of this section, exceedances of the 20 or 50 ppmv TOC outlet emission limit, averaged over the operating day, will result in no more than one violation per day per control device. Except as provided in paragraph (b)(8)(iv) of this section, exceedances of the 20 or 50 ppmv hydrogen halide or halogen outlet emission limit, averaged over the operating day, will result in no more

than one violation per day per control device.

(iv) Periods of time when monitoring measurements exceed the parameter values as well as periods of inadequate monitoring data do not constitute a violation if they occur during a startup, shutdown, or malfunction, and the facility follows its startup, shutdown, and malfunction plan.

(c) *Monitoring for emission limits.* The owner or operator of any affected source complying with the provisions of §63.1254(a)(2) shall demonstrate continuous compliance with the 900 and 1,800 kg/yr emission limits by calculating daily 365-day rolling summations of emissions. During periods of planned routine maintenance when emissions are controlled as specified in §63.1252(h), the owner or operator must calculate controlled emissions assuming the HAP emissions are reduced by 93 percent. For any owner or operator opting to switch compliance strategy from the 93 percent control requirement to the annual mass emission limit method, as described in §63.1254(a)(1)(i), the rolling summations, beginning with the first day after the switch, must include emissions from the past 365 days.

(d) *Monitoring for equipment leaks.* The owner or operator of any affected source complying with the requirements of §63.1255 of this subpart shall meet the monitoring requirements described §63.1255 of this subpart.

(e) *Pollution prevention.* The owner or operator of any affected source that chooses to comply with the requirements of §§63.1252(e)(2) and (3) shall calculate a yearly rolling average of kg HAP consumption per kg production and kg VOC consumption per kg production every month or every 10 batches. Each rolling average kg/kg factor that exceeds the value established in §63.1257(f)(1)(ii) will be considered a violation of the emission limit.

(f) *Emissions averaging.* The owner or operator of any affected source that chooses to comply with the requirements of §63.1252(d) shall meet all monitoring requirements specified in paragraphs (b)(1) and (3) of this section, as applicable, for all processes and storage tanks included in the emissions average.

(g) *Inspection and monitoring of waste management units and treatment processes.* (1) For each wastewater tank, surface impoundment, container, individual drain system, and oil-water separator that receives, manages, or treats wastewater, a residual removed from wastewater, a recycled wastewater, or a recycled residual removed from wastewater, the owner or operator shall comply with the inspection requirements specified in Table 7 of this subpart.

(2) For each biological treatment unit used to comply with §63.1256(g), the owner or operator shall monitor TSS, BOD, and the biomass concentration at a frequency approved by the permitting authority and using methods approved by the permitting authority. The owner or operator may request approval to monitor other parameters. The request shall be submitted in the Precompliance report according to the procedures specified in §63.1260(e), and shall include a description of planned reporting and recordkeeping procedures. The owner or operator shall include as part of the submittal the basis for the selected monitoring frequencies and the methods that will be used. The Administrator will specify appropriate reporting and recordkeeping requirements as part of the review of the permit application or by other appropriate means.

(3) For nonbiological treatment units, the owner or operator shall request approval to monitor appropriate parameters that demonstrate proper operation of the selected treatment process. The request shall be submitted in the Precompliance report according to the procedures specified in §63.1260(e), and shall include a description of planned reporting and recordkeeping procedures. The Administrator will specify appropriate reporting and recordkeeping requirements as part of the review of the permit application or by other appropriate means.

(h) *Leak inspection provisions for vapor suppression equipment.* (1) Except as provided in paragraph (h)(9) and (10) of this section, for each vapor collection system, closed-vent system, fixed roof, cover, or enclosure required to comply

with this section, the owner or operator shall comply with the requirements of paragraphs (h)(2) through (8) of this section.

(2) Except as provided in paragraphs (h)(6) and (7) of this section, each vapor collection system and closed-vent system shall be inspected according to the procedures and schedule specified in paragraphs (h)(2)(i) and (ii) of this section and each fixed roof, cover, and enclosure shall be inspected according to the procedures and schedule specified in paragraph (h)(2)(iii) of this section.

(i) If the vapor collection system or closed-vent system is constructed of hard-piping, the owner or operator shall:

(A) Conduct an initial inspection according to the procedures in paragraph (h)(3) of this section, and

(B) Conduct annual visual inspections for visible, audible, or olfactory indications of leaks.

(ii) If the vapor collection system or closed-vent system is constructed of ductwork, the owner or operator shall:

(A) Conduct an initial inspection according to the procedures in paragraph (h)(3) of this section, and

(B) Conduct annual inspections according to the procedures in paragraph (h)(3) of this section.

(C) Conduct annual visual inspections for visible, audible, or olfactory indications of leaks.

(iii) For each fixed roof, cover, and enclosure, the owner or operator shall:

(A) Conduct an initial inspection according to the procedures in paragraph (h)(3) of this section, and

(B) Conduct semiannual visual inspections for visible, audible, or olfactory indications of leaks.

(3) Each vapor collection system, closed-vent system, fixed roof, cover, and enclosure shall be inspected according to the procedures specified in paragraphs (h)(3)(i) through (v) of this section.

(i) Inspections shall be conducted in accordance with Method 21 of 40 CFR part 60, appendix A.

(ii) *Detection instrument performance criteria.* (A) Except as provided in paragraph (h)(3)(ii)(B) of this section, the detection instrument shall meet the performance criteria of Method 21 of 40 CFR part 60, appendix A, except the instrument response factor criteria in section 3.1.2(a) of Method 21 shall be for the average composition of the process fluid not each individual VOC in the stream. For process streams that contain nitrogen, air, or other inerts which are not organic HAP or VOC, the average stream response factor shall be calculated on an inert-free basis.

(B) If no instrument is available at the plant site that will meet the performance criteria specified in paragraph (h)(3)(ii)(A) of this section, the instrument readings may be adjusted by multiplying by the average response factor of the process fluid, calculated on an inert-free basis as described in paragraph (h)(3)(ii)(A) of this section.

(iii) The detection instrument shall be calibrated before use on each day of its use by the procedures specified in Method 21 of 40 CFR part 60, appendix A.

(iv) Calibration gases shall be as follows:

(A) Zero air (less than 10 parts per million hydrocarbon in air); and

(B) Mixtures of methane in air at a concentration less than 10,000 parts per million. A calibration gas other than methane in air may be used if the instrument does not respond to methane or if the instrument does not meet the performance criteria specified in paragraph (h)(2)(ii)(A) of this section. In such cases, the calibration gas may be a mixture of one or more of the compounds to be measured in air.

(v) An owner or operator may elect to adjust or not adjust instrument readings for background. If an owner or operator elects to not adjust readings for background, all such instrument readings shall be compared directly to the applicable leak definition to determine whether there is a leak. If an owner or operator elects to adjust instrument readings for background, the owner or operator shall measure background concentration using the procedures in § 63.180(b) and (c). The owner or operator shall subtract background reading from the maximum concentration indicated by the instrument.

(vi) The background level shall be determined according to the procedures in Method 21 of 40 CFR part 60 appendix A.

(vii) The arithmetic difference between the maximum concentration indicated by the instrument and the background level shall be compared with 500 parts per million for determining compliance.

(4) Leaks, as indicated by an instrument reading greater than 500 parts per million above background or by visual inspections, shall be repaired as soon as practicable, except as provided in paragraph (h)(5) of this section.

(i) A first attempt at repair shall be made no later than 5 calendar days after the leak is detected.

(ii) Repair shall be completed no later than 15 calendar days after the leak is detected, except as provided in paragraph (h)(4)(iii) of this section.

(iii) For leaks found in vapor collection systems used for transfer operations, repairs shall be completed no later than 15 calendar days after the leak is detected or at the beginning of the next transfer loading operation, whichever is later.

(5) Delay of repair of a vapor collection system, closed-vent system, fixed roof, cover, or enclosure for which leaks have been detected is allowed if the repair is technically infeasible without a shutdown, as defined in §63.1251, or if the owner or operator determines that emissions resulting from immediate repair would be greater than the fugitive emissions likely to result from delay of repair. Repair of such equipment shall be complete by the end of the next shutdown.

(6) Any parts of the vapor collection system, closed-vent system, fixed roof, cover, or enclosure that are designated, as described in paragraph (h)(8) of this section, as unsafe to inspect are exempt from the inspection requirements of paragraphs (h)(2)(i), (ii), and (iii) of this section if:

(i) The owner or operator determines that the equipment is unsafe to inspect because inspecting personnel would be exposed to an imminent or potential danger as a consequence of complying with paragraphs (h)(2)(i), (ii), or (iii) of this section; and

(ii) The owner or operator has a written plan that requires inspection of the equipment as frequently as practicable during safe-to-inspect times.

(7) Any parts of the vapor collection system, closed-vent system, fixed roof, cover, or enclosure that are designated, as described in paragraph (h)(8) of this section, as difficult to inspect are exempt from the inspection requirements of paragraphs (h)(2)(i), (ii), and (iii)(A) of this section if:

(i) The owner or operator determines that the equipment cannot be inspected without elevating the inspecting personnel more than 2 meters above a support surface; and

(ii) The owner or operator has a written plan that requires inspection of the equipment at least once every 5 years.

(8) Records shall be maintained as specified in §63.1259(i) (4) through (9).

(9) If a closed-vent system subject to this section is also subject to the equipment leak provisions of §63.1255, the owner or operator shall comply with the provisions of §63.1255 and is exempt from the requirements of this section.

(10) Instead of complying with the provisions of paragraphs (h)(2) through (8) of this section, an owner or operator may design a closed-vent system to operate at a pressure below atmospheric pressure. The system shall be equipped with at least one pressure gauge or other pressure measurement device that can be read from a readily accessible location to verify that negative pressure is being maintained in the closed-vent system when the associated control device is operating.

(i) *Planned routine maintenance.* During periods of planned routine maintenance when organic HAP emissions are controlled as specified in §63.1252(h)(2), the owner or operator must monitor the condenser outlet gas temperature according to the procedures specified in paragraph (b)(1)(iii) of this section. During periods of planned routine maintenance when HCl emissions are controlled as specified in §63.1252(h)(3), the owner or operator must monitor the pH of the scrubber effluent once per day.

[63 FR 50326, Sept. 21, 1998, as amended at 65 FR 52612, Aug. 29, 2000; 66 FR 40134, Aug. 2, 2001]

§ 63.1259 Recordkeeping requirements.

(a) *Requirements of subpart A of this part.* The owner or operator of an affected source shall comply with the recordkeeping requirements in subpart A of this part as specified in Table 1 of this subpart and in paragraphs (a)(1) through (5) of this section.

(1) *Data retention.* Each owner or operator of an affected source shall keep copies of all records and reports required by this subpart for at least 5 years, as specified in § 63.10(b)(1).

(2) *Records of applicability determinations.* The owner or operator of a stationary source that is not subject to this subpart shall keep a record of the applicability determination, as specified in § 63.10(b)(3).

(3) *Startup, shutdown, and malfunction plan.* The owner or operator of an affected source shall develop and implement a written startup, shutdown, and malfunction plan as specified in § 63.6(e)(3). This plan shall describe, in detail, procedures for operating and maintaining the affected source during periods of startup, shutdown, and malfunction and a program for corrective action for malfunctioning process, air pollution control, and monitoring equipment used to comply with this subpart. The owner or operator of an affected source shall keep the current and superseded versions of this plan onsite, as specified in § 63.6(e)(3)(v). The owner or operator shall keep the startup, shutdown, and malfunction records specified in paragraphs (b)(3)(i) through (iii) of this section. Reports related to the plan shall be submitted as specified in § 63.1260(i).

(i) The owner or operator shall record the occurrence and duration of each malfunction of the process operations or of air pollution control equipment used to comply with this subpart, as specified in § 63.6(e)(3)(iii).

(ii) The owner or operator shall record the occurrence and duration of each malfunction of continuous monitoring systems used to comply with this subpart.

(iii) For each startup, shutdown, or malfunction, the owner or operator shall record all information necessary to demonstrate that the procedures specified in the affected source's startup, shutdown, and malfunction plan were followed, as specified in § 63.6(e)(3)(iii); alternatively, the owner or operator shall record any actions taken that are not consistent with the plan, as specified in § 63.6(e)(3)(iv).

(4) *Recordkeeping requirements for sources with continuous monitoring systems.* The owner or operator of an affected source who elects to install a continuous monitoring system shall maintain records specified in § 63.10(c)(1) through (14).

(5) *Application for approval of construction or reconstruction.* For new affected sources, each owner or operator shall comply with the provisions in § 63.5 regarding construction and reconstruction, excluding the provisions specified in § 63.5(d)(1)(ii)(H), (d)(2), and (d)(3)(ii).

(b) *Records of equipment operation.* The owner or operator must keep the following records up-to-date and readily accessible:

(1) Each measurement of a control device operating parameter monitored in accordance with § 63.1258 and each measurement of a treatment process parameter monitored in accordance with § 63.1258(g)(2) and (3).

(2) For processes subject to § 63.1252(e), records of consumption, production, and the rolling average values of the production-indexed HAP and VOC consumption factors.

(3) For each continuous monitoring system used to comply with this subpart, records documenting the completion of calibration checks and maintenance of continuous monitoring systems.

(4) For purposes of compliance with the annual mass limits of § 63.1254(a)(2) and (b)(2), daily records of the rolling annual total emissions.

(5) Records of the following, as appropriate:

(i) For processes that are in compliance with the percent reduction requirements of § 63.1254(a)(1) or (b)(1) and that contain vents controlled to less than the percent reduction requirement, the records specified in paragraphs (b)(5)(i)(A) through (C) of this section are required.

(A) Standard batch uncontrolled and controlled emissions for each process;

(B) Actual uncontrolled and controlled emissions for each nonstandard batch; and

(C) A record whether each batch operated was considered a standard batch.

(ii) For processes in compliance with the annual mass limits of §63.1254(a)(2) or (b)(2), the following records are required:

(A) The number of batches per year for each batch process;

(B) The operating hours per year for continuous processes;

(C) Standard batch uncontrolled and controlled emissions for each process;

(D) Actual controlled emissions for each batch operated during periods of planned routine maintenance of a CCCD, calculated according to §63.1258(c).

(E) Actual uncontrolled and controlled emissions for each nonstandard batch;

(F) A record whether each batch operated was considered a standard batch.

(6) Wastewater concentration per POD or process, except as provided in §63.1256(a)(1)(ii).

(7) Number of storage tank turnovers per year, if used in an emissions average.

(8) A schedule or log of each operating scenario updated daily or, at a minimum, each time a different operating scenario is put into operation.

(9) Description of worst-case operating conditions as required in §63.1257(b)(8).

(10) Periods of planned routine maintenance as described in §§63.1252(h) and 63.1257(c)(5).

(11) If the owner or operator elects to comply with §63.1253(b) or (c) by installing a floating roof, the owner or operator must keep records of each inspection and seal gap measurement in accordance with §63.123(c) through (e) as applicable.

(12) If the owner or operator elects to comply with the vapor balancing alternative in §63.1253(f), the owner or operator must keep records of the DOT certification required by §63.1253(f)(2) and the pressure relief vent setting and the leak detection records specified in §63.1253(f)(5).

(13) All maintenance performed on the air pollution control equipment.

(c) *Records of operating scenarios.* The owner or operator of an affected source shall keep records of each operating scenario which demonstrates compliance with this subpart.

(d) *Records of equipment leak detection and repair programs.* The owner or operator of any affected source implementing the leak detection and repair (LDAR) program specified in §63.1255 of this subpart, shall implement the recordkeeping requirements in §63.1255 of this subpart.

(e) *Records of emissions averaging.* The owner or operator of any affected source that chooses to comply with the requirements of §63.1252(d) shall maintain up-to-date records of the following information:

(1) An Implementation Plan which shall include in the plan, for all process vents and storage tanks included in each of the averages, the information listed in paragraphs (e)(1)(i) through (v) of this section.

(i) The identification of all process vents and storage tanks in each emissions average.

(ii) The uncontrolled and controlled emissions of HAP and the overall percent reduction efficiency as determined in §§63.1257(g)(1) through (4) or 63.1257(h)(1) through (3) as applicable.

(iii) The calculations used to obtain the uncontrolled and controlled HAP emissions and the overall percent reduction efficiency.

(iv) The estimated values for all parameters required to be monitored under §63.1258(f) for each process and storage tank included in an average.

(v) A statement that the compliance demonstration, monitoring, inspection, recordkeeping and reporting provisions in §§63.1257(g) and (h), 63.1258(f), and 63.1260(k) that are applicable to each emission point in the emissions average will be implemented beginning on the date of compliance.

(2) The Implementation Plan must demonstrate that the emissions from the processes and storage tanks proposed to be included in the average will not result in greater hazard or, at the option of the operating permit authority, greater risk to human health or the environment than if the storage

tanks and process vents were controlled according to the provisions in §§ 63.1253 and 63.1254, respectively.

(i) This demonstration of hazard or risk equivalency shall be made to the satisfaction of the operating permit authority.

(A) The Administrator may require owners and operators to use specific methodologies and procedures for making a hazard or risk determination.

(B) The demonstration and approval of hazard or risk equivalency shall be made according to any guidance that the Administrator makes available for use or any other technically sound information or methods.

(ii) An emissions averaging plan that does not demonstrate hazard or risk equivalency to the satisfaction of the Administrator shall not be approved. The Administrator may require such adjustments to the emissions averaging plan as are necessary in order to ensure that the average will not result in greater hazard or risk to human health or the environment than would result if the emission points were controlled according to §§ 63.1253 and 63.1254.

(iii) A hazard or risk equivalency demonstration must:

(A) Be a quantitative, comparative chemical hazard or risk assessment;

(B) Account for differences between averaging and non-averaging options in chemical hazard or risk to human health or the environment; and

(C) Meet any requirements set by the Administrator for such demonstrations.

(3) Records as specified in paragraphs (a), (b) and (d) of this section.

(4) A rolling quarterly calculation of the annual percent reduction efficiency as specified in § 63.1257(g) and (h).

(f) *Records of delay of repair*. Documentation of a decision to use a delay of repair due to unavailability of parts, as specified in § 63.1256(i), shall include a description of the failure, the reason additional time was necessary (including a statement of why replacement parts were not kept onsite and when delivery from the manufacturer is scheduled), and the date when the repair was completed.

(g) *Record of wastewater stream or residual transfer*. The owner or operator transferring an affected wastewater stream or residual removed from an affected wastewater stream in accordance with § 63.1256(a)(5) shall keep a record of the notice sent to the treatment operator stating that the wastewater stream or residual contains organic HAP which are required to be managed and treated in accordance with the provisions of this subpart.

(h) *Records of extensions*. The owner or operator shall keep documentation of a decision to use an extension, as specified in § 63.1256(b)(6)(ii) or (b)(9), in a readily accessible location. The documentation shall include a description of the failure, documentation that alternate storage capacity is unavailable, and specification of a schedule of actions that will ensure that the control equipment will be repaired and the tank will be emptied as soon as practical.

(i) *Records of inspections*. The owner or operator shall keep records specified in paragraphs (i)(1) through (9) of this section.

(1) A record that each waste management unit inspection required by § 63.1256(b) through (f) was performed.

(2) A record that each inspection for control devices required by § 63.1256(h) was performed.

(3) A record of the results of each seal gap measurement required by § 63.1256(b)(5) and (f)(3). The records shall include the date of measurement, the raw data obtained in the measurement, and the calculations described in § 63.120(b)(2) through (4).

(4) Records identifying all parts of the vapor collection system, closed-vent system, fixed roof, cover, or enclosure that are designated as unsafe to inspect in accordance with § 63.1258(h)(6), an explanation of why the equipment is unsafe to inspect, and the plan for inspecting the equipment.

(5) Records identifying all parts of the vapor collection system, closed-vent system, fixed roof, cover, or enclosure that are designated as difficult to inspect in accordance with § 63.1258(h)(7), an explanation of why the equipment is difficult to inspect, and the plan for inspecting the equipment.

(6) For each vapor collection system or closed-vent system that contains bypass lines that could divert a vent stream away from the control device and to the atmosphere, the owner or operator shall keep a record of the information specified in either paragraph (i)(6)(i) or (ii) of this section.

(i) Hourly records of whether the flow indicator specified under §63.1252(b)(1) was operating and whether a diversion was detected at any time during the hour, as well as records of the times and durations of all periods when the vent stream is diverted from the control device or the flow indicator is not operating.

(ii) Where a seal mechanism is used to comply with §63.1252(b)(2), hourly records of flow are not required. In such cases, the owner or operator shall record that the monthly visual inspection of the seals or closure mechanisms has been done, and shall record the occurrence of all periods when the seal mechanism is broken, the bypass line valve position has changed, or the key for a lock-and-key type lock has been checked out, and records of any car-seal that has broken.

(7) For each inspection conducted in accordance with §63.1258(h)(2) and (3) during which a leak is detected, a record of the information specified in paragraphs (i)(7)(i) through (ix) of this section.

(i) Identification of the leaking equipment.

(ii) The instrument identification numbers and operator name or initials, if the leak was detected using the procedures described in §63.1258(h)(3); or a record that the leak was detected by sensory observations.

(iii) The date the leak was detected and the date of the first attempt to repair the leak.

(iv) Maximum instrument reading measured by the method specified in §63.1258(h)(4) after the leak is successfully repaired or determined to be nonrepairable.

(v) ''Repair delayed'' and the reason for the delay if a leak is not repaired within 15 calendar days after discovery of the leak.

(vi) The name, initials, or other form of identification of the owner or operator (or designee) whose decision it was that repair could not be effected without a shutdown.

(vii) The expected date of successful repair of the leak if a leak is not repaired within 15 calendar days.

(viii) Dates of shutdowns that occur while the equipment is unrepaired.

(ix) The date of successful repair of the leak.

(8) For each inspection conducted in accordance with §63.1258(h)(3) during which no leaks are detected, a record that the inspection was performed, the date of the inspection, and a statement that no leaks were detected.

(9) For each visual inspection conducted in accordance with §63.1258(h)(2)(i)(B) or (h)(2)(iii)(B) of this section during which no leaks are detected, a record that the inspection was performed, the date of the inspection, and a statement that no leaks were detected.

[63 FR 50326, Sept. 21, 1998, as amended at 65 FR 52613, Aug. 29, 2000; 66 FR 40135, Aug. 2, 2001]

§63.1260 Reporting requirements.

(a) The owner or operator of an affected source shall comply with the reporting requirements of paragraphs (b) through (l) of this section. Applicable reporting requirements of §§63.9 and 63.10 are also summarized in Table 1 of this subpart.

(b) *Initial notification.* The owner or operator shall submit the applicable initial notification in accordance with §63.9(b) or (d).

(c) *Application for approval of construction or reconstruction.* An owner or operator who is subject to §63.5(b)(3) shall submit to the Administrator an application for approval of the construction of a new major affected source, the reconstruction of a major affected source, or the reconstruction of a major source such that the source becomes a major affected source subject to the standards. The application shall be prepared in accordance with §63.5(d).

(d) *Notification of CMS performance evaluation.* An owner or operator who is required by the Administrator to conduct a performance evaluation for a continuous monitoring system shall notify the Administrator of the date of

the performance evaluation as specified in § 63.8(e)(2).

(e) *Precompliance report.* The Precompliance report shall be submitted at least 6 months prior to the compliance date of the standard. For new sources, the Precompliance report shall be submitted to the Administrator with the application for approval of construction or reconstruction. The Administrator shall have 90 days to approve or disapprove the plan. The plan shall be considered approved if the Administrator either approves the plan in writing, or fails to disapprove the plan in writing. The 90 day period shall begin when the Administrator receives the request. If the request is denied, the owner or operator must still be in compliance with the standard by the compliance date. To change any of the information submitted in the report, the owner or operator shall notify the Administrator 90 days before the planned change is to be implemented; the change shall be considered approved if the Administrator either approves the change in writing, or fails to disapprove the change in writing. The Precompliance report shall include:

(1) Requests for approval to use alternative monitoring parameters or requests to set monitoring parameters according to § 63.1258(b)(4).

(2) Descriptions of the daily or per batch demonstrations to verify that control devices subject to § 63.1258(b)(1)(i) are operating as designed.

(3) A description of test conditions, and the corresponding monitoring parameter values for parameters that are set according to § 63.1258(b)(3)(ii)(C).

(4) For owners and operators complying with the requirements of § 63.1252(e), the P2 demonstration summary required in § 63.1257(f).

(5) Data and rationale used to support an engineering assessment to calculate uncontrolled emissions from process vents as required in § 63.1257(d)(2)(ii).

(6) Data and other information supporting the determination of annual average concentrations by process simulation as required in § 63.1257(e)(1)(ii).

(7) Bench scale or pilot-scale test data and rationale used to determine annual average concentrations as required in § 63.1257(e)(1)(ii)(C).

(f) *Notification of Compliance Status report.* The Notification of Compliance Status report required under § 63.9 shall be submitted no later than 150 days after the compliance date and shall include:

(1) The results of any applicability determinations, emission calculations, or analyses used to identify and quantify HAP emissions from the affected source.

(2) The results of emissions profiles, performance tests, engineering analyses, design evaluations, or calculations used to demonstrate compliance. For performance tests, results should include descriptions of sampling and analysis procedures and quality assurance procedures.

(3) Descriptions of monitoring devices, monitoring frequencies, and the values of monitored parameters established during the initial compliance determinations, including data and calculations to support the levels established.

(4) Listing of all operating scenarios.

(5) Descriptions of worst-case operating and/or testing conditions for control devices.

(6) Identification of emission points subject to overlapping requirements described in § 63.1250(h) and the authority under which the owner or operator will comply.

(7) Anticipated periods of planned routine maintenance of a CCCD subject to § 63.1252(h) during the period between the compliance date and the end of the period covered by the first Periodic report, and if applicable, the rationale for why the planned routine maintenance must be performed while a process with a vent subject to § 63.1254(a)(3) will be operating.

(g) *Periodic reports.* An owner or operator shall prepare Periodic reports in accordance with paragraphs (g)(1) and (2) of this section and submit them to the Administrator.

(1) *Submittal schedule.* Except as provided in paragraphs (g)(1)(i), (ii), and (iii) of this section, an owner or operator shall submit Periodic reports semiannually. The first report shall be submitted no later than 240 days after the Notification of Compliance Status

is due and shall cover the 6-month period beginning on the date the Notification of Compliance Status is due. Each subsequent Periodic report shall cover the 6-month period following the preceding period.

(i) When the Administrator determines on a case-by-case basis that more frequent reporting is necessary to accurately assess the compliance status of the affected source; or

(ii) Quarterly reports shall be submitted when the source experiences an exceedance of a temperature limit monitored according to the provisions of §63.1258(b)(1)(iii) or an exceedance of the outlet concentration monitored according to the provisions of §63.1258(b)(1)(x) or (b)(5). Once an affected source reports quarterly, the affected source shall follow a quarterly reporting format until a request to reduce reporting frequency is approved. If an owner or operator submits a request to reduce the frequency of reporting, the provisions in §63.10(e)(3)(ii) and (iii) shall apply, except that the phrase ''excess emissions and continuous monitoring system performance report and/or summary report'' shall mean ''Periodic report'' for the purposes of this section.

(iii) When a new operating scenario has been operated since the last report, in which case quarterly reports shall be submitted.

(2) *Content of Periodic report.* The owner or operator shall include the information in paragraphs (g)(2)(i) through (vii) of this section, as applicable.

(i) Each Periodic report must include the information in §63.10(e)(3)(vi)(A) through (I) and (K) through (M). For each continuous monitoring system, the Periodic report must also include the information in §63.10(e)(3)(vi)(J).

(ii) If the total duration of excess emissions, parameter exceedances, or excursions for the reporting period is 1 percent or greater of the total operating time for the reporting period, or the total continuous monitoring system downtime for the reporting period is 5 percent or greater of the total operating time for the reporting period, the Periodic report must include the information in paragraphs (g)(2)(ii)(A) through (D) of this section.

(A) Monitoring data, including 15-minute monitoring values as well as daily average values of monitored parameters, for all operating days when the average values were outside the ranges established in the Notification of Compliance Status report or operating permit.

(B) Duration of excursions, as defined in §63.1258(b)(7).

(C) Operating logs and operating scenarios for all operating scenarios for all operating days when the values are outside the levels established in the Notification of Compliance Status report or operating permit.

(D) When a continuous monitoring system is used, the information required in §63.10(c)(5) through (13).

(iii) For each inspection conducted in accordance with §63.1258(h)(2) or (3) during which a leak is detected, the records specified in §63.1259(i)(7) must be included in the next Periodic report.

(iv) For each vapor collection system or closed vent system with a bypass line subject to §63.1252(b)(1), records required under §63.1259(i)(6)(i) of all periods when the vent stream is diverted from the control device through a bypass line. For each vapor collection system or closed vent system with a bypass line subject to §63.1252(b)(2), records required under §63.1259(i)(6)(ii) of all periods in which the seal mechanism is broken, the bypass valve position has changed, or the key to unlock the bypass line valve was checked out.

(v) The information in paragraphs (g)(2)(v)(A) through (D) of this section shall be stated in the Periodic report, when applicable.

(A) No excess emissions.

(B) No exceedances of a parameter.

(C) No excursions.

(D) No continuous monitoring system has been inoperative, out of control, repaired, or adjusted.

(vi) The information specified in paragraphs (g)(2)(vi)(A) through (C) for periods of planned routine maintenance.

(A) For each storage tank subject to control requirements, periods of planned routine maintenance during which the control device does not meet the specifications of §63.1253(b) through (d).

(B) For a CCCD subject to § 63.1252(h), periods of planned routine maintenance during the current reporting period and anticipated periods of planned routine maintenance during the next reporting period.

(C) Rationale for why planned routine maintenance of a CCCD subject to § 63.1252(h) must be performed while a process with a vent subject to § 63.1254(a)(3) will be operating, if applicable. This requirement applies only if the rationale is not in, or differs from that in, the Notification of Compliance Status report.

(vii) Each new operating scenario which has been operated since the time period covered by the last Periodic report. For each new operating scenario, the owner or operator shall provide verification that the operating conditions for any associated control or treatment device have not been exceeded, and that any required calculations and engineering analyses have been performed. For the initial Periodic report, each operating scenario for each process operated since the due date of the Notification of Compliance Status Report shall be submitted.

(viii) If the owner or operator elects to comply with the provisions of § 63.1253(b) or (c) by installing a floating roof, the owner or operator shall submit the information specified in § 63.122(d) through (f) as applicable. References to § 63.152 from § 63.122 shall not apply for the purposes of this subpart.

(h) *Notification of process change.*

(1) Except as specified in paragraph (h)(2) of this section, whenever a process change is made, or a change in any of the information submitted in the Notification of Compliance Status Report, the owner or operator shall submit the information specified in paragraphs (h)(1)(i) through (iv) of this section with the next Periodic report required under paragraph (g) of this section.

(i) A brief description of the process change.

(ii) A description of any modifications to standard procedures or quality assurance procedures.

(iii) Revisions to any of the information reported in the original Notification of Compliance Status Report under paragraph (f) of this section.

(iv) Information required by the Notification of Compliance Status Report under paragraph (f) of this section for changes involving the addition of processes or equipment.

(2) An owner or operator must submit a report 60 days before the scheduled implementation date of either of the following:

(i) Any change in the activity covered by the Precompliance report.

(ii) A change in the status of a control device from small to large.

(i) *Reports of startup, shutdown, and malfunction.* An owner or operator shall prepare startup, shutdown, and malfunction reports as specified in paragraphs (i)(1) and (2) of this section.

(1) If actions taken by an owner or operator during a startup, shutdown, or malfunction of an affected source (including actions to correct a malfunction) are consistent with the procedures specified in the source's startup, shutdown, and malfunction plan, the owner or operator shall state this fact in a startup, shutdown, or malfunction report. The report shall also include the information specified in § 63.1259(a)(3)(i) and (ii) and shall contain the name, title, and signature of the owner or operator or other responsible official who is certifying its accuracy. For the purposes of this subpart, the startup, shutdown, and malfunction reports shall be submitted on the same schedule as the periodic reports required under paragraph (g) of this section instead of the schedule specified in § 63.10(d)(5)(i). Reports are only required if a startup, shutdown, or malfunction occurred during the reporting period.

(2) Any time an owner or operator takes an action that is not consistent with the procedures specified in the affected source's startup, shutdown, and malfunction plan, the owner or operator shall submit immediate startup, shutdown, and malfunction reports as specified in § 63.10(d)(5)(ii).

(j) *Reports of LDAR programs.* The owner or operator of any affected source implementing the LDAR program specified in § 63.1255 of this subpart shall implement the reporting requirements in § 63.1255 of this subpart. Copies of all reports shall be retained

as records for a period of 5 years, in accordance with the requirements of § 63.10(b)(1).

(k) *Reports of emissions averaging*. The owner or operator of any affected source that chooses to comply with the requirements of § 63.1252(d) shall submit the implementation plan described in § 63.1259(e) 6 months prior to the compliance date of the standard and the following information in the periodic reports:

(1) The records specified in § 63.1259(e) for each process or storage tank included in the emissions average;

(2) All information as specified in paragraph (g) of this section for each process or storage tank included in the emissions average;

(3) Any changes of the processes or storage tanks included in the average.

(4) The calculation of the overall percent reduction efficiency for the reporting period.

(5) Changes to the Implementation Plan which affect the calculation methodology of uncontrolled or controlled emissions or the hazard or risk equivalency determination.

(6) Every second semiannual or fourth quarterly report, as appropriate, shall include the results according to § 63.1259(e)(4) to demonstrate the emissions averaging provisions of §§ 63.1252(d), 63.1257(g) and (h), 63.1258(f), and 63.1259(f) are satisfied.

(l) *Notification of performance test and test plan*. The owner or operator of an affected source shall notify the Administrator of the planned date of a performance test at least 60 days before the test in accordance with § 63.7(b). The owner or operator also must submit the test plan required by § 63.7(c) and the emission profile required by 63.1257(b)(8)(ii) with the notification of the performance test.

(m) *Request for extension of compliance*. An owner or operator may submit to the Administrator a request for an extension of compliance in accordance with § 63.1250(f)(4).

[63 FR 50326, Sept. 21, 1998, as amended at 65 FR 52614, Aug. 29, 2000; 66 FR 40135, Aug. 2, 2001]

§ 63.1261 Delegation of authority.

(a) In delegating implementation and enforcement authority to a State under § 112(d) of the Clean Air Act, the authorities contained in paragraph (b) of this section shall be retained by the Administrator and not transferred to a State.

(b) The authority conferred in § 63.177; the authority to approve applications for determination of equivalent means of emission limitation; and the authority to approve alternative test methods shall not be delegated to any State.

TABLE 1 TO SUBPART GGG OF PART 63—GENERAL PROVISIONS APPLICABILITY TO SUBPART GGG

General provisions reference	Summary of requirements	Applies to subpart GGG	Comments
63.1(a)(1)	General applicability of the General Provisions.	Yes	Additional terms defined in § 63.1251; when overlap between subparts A and GGG of this part, subpart GGG takes precedence.
63.1(a)(2–7)		Yes	
63.1(a)(8)		No	Discusses state programs.
63.1(a)(9–14)		Yes	
63.1(b)(1)	Initial applicability determination	Yes	Subpart GGG clarifies the applicability in § 63.1250.
63.1(b)(2)	Title V operating permit—see part 70	Yes	All major affected sources are required to obtain a title V permit.
63.1(b)(3)	Record of the applicability determination	Yes	All affected sources are subject to subpart GGG according to the applicability definition of subpart GGG.
63.1(c)(1)	Applicability after standards are set	Yes	Subpart GGG clarifies the applicability of each paragraph of subpart A to sources subject to subpart GGG.
63.1(c)(2)	Title V permit requirement	No	All major affected sources are required to obtain a title V permit. Area sources are not subject to subpart GGG.
63.1(c)(3)	Reserved		
63.1(c)(4)	Requirements for existing source that obtains an extension of compliance.	Yes	

General provisions reference	Summary of requirements	Applies to subpart GGG	Comments
§ 63.1(c)(5)	Notification requirements for an area source that increases HAP emissions to major source levels.	Yes	
63.1(d)	[Reserved]	NA	
63.1(e)	Applicability of permit program before a relevant standard has been set.	Yes	
63.2	Definitions.	Yes	Additional terms defined in § 63.1251; when overlap between subparts A and GGG of this part occurs, subpart GGG takes precedence.
63.3	Units and abbreviations.	Yes	Other units used in subpart GGG are defined in that subpart.
63.4	Prohibited activities.	Yes	
63.5(a)	Construction and reconstruction—applicability.	Yes	Except replace the terms ''source'' and ''stationary source'' with ''affected source''.
63.5(b)(1)	Upon construction, relevant standards for new sources.	Yes	
63.5(b)(2)	[Reserved]	NA	
63.5(b)(3)	New construction/reconstruction	Yes	Except for changes and additions authorized under § 52.2454 of this title. However, the requirement to submit the Precompliance report at least 90 days before the compliance date still applies.
63.5(b)(4)	Construction/reconstruction notification	Yes	
63.5(b)(5)	Construction/reconstruction compliance	Yes	
63.5(b)(6)	Equipment addition or process change	Yes	
63.5(c)	[Reserved]	NA	
63.5(d)	Application for approval of construction/reconstruction.	Yes	Except for certain provisions identified in 63.1259(a)(5)
§ 63.5(e)	Construction/reconstruction approval	Yes	
63.5(f)	Construction/reconstruction approval based on prior State review..	Yes	Except replace ''source'' with ''affected source''.
63.6(a)(1)	Compliance with standards and maintenance requirements.	Yes	
63.6(a)(2)	Requirements for area source that increases emissions to become major.	Yes	
63.6(b)(1–2)	Compliance dates for new and reconstructed sources.	No	Subpart GGG specifies compliance dates.
63.6(b)(3–6)	Compliance dates for area sources that become major sources.	Yes	
63.6 (b)(7)	Compliance dates for new sources resulting from new unaffected area sources becoming subject to standards.	No	Subpart GGG specifies NS applicability and compliance dates
63.6(c)	Compliance dates for existing sources	Yes	Except replace ''source'' with ''affected source''. Subpart GGG specifies compliance dates.
63.6(e)	Operation and maintenance requirements.	Yes	Startup, Shutdown, Malfunction Plan requirements specifically include malfunction process, control and monitoring equipment.
63.6(f)–(g)	Compliance with nonopacity and alternative nonopacity emission standards.	Yes	Except that subpart GGG specifies performance test conditions.
63.6(h)	Opacity and visible emission standards	No	Subpart GGG does not contain any opacity or visible emission standards.
§ 63.6(i)(1) through (7).	Requests for compliance extensions	No	§ 63.1250(f)(6) specifies provisions for compliance extensions.
§ 63.6(i)(8) through (14).	Approval of compliance extensions	Yes	Except references to § 63.6(i)(4) through (6) mean § 63.1250(f)(6).
63.6(j)	Exemption from compliance with emission standards.	Yes	
63.7(a)(1)	Performance testing requirements	Yes	Subpart GGG also specifies required testing and compliance procedures.
63.7(a)(2)(i)–(ix)		Yes	Except substitute ''150 days'' instead of ''180 days.''
63.7(a)(3)		Yes	
63.7(b)(1)	Notification of performance test	Yes	
63.7(b)(2)	Notification of delay in conducting a scheduled performance test.	Yes	

General provisions reference	Summary of requirements	Applies to subpart GGG	Comments
63.7(c)	Quality assurance program	Yes	Except that the test plan must be submitted with the notification of the performance test.
63.7(d)	Performance testing facilities.	Yes	Except replace ''source'' with ''affected source''.
63.7(e)	Conduct of performance tests.	Yes	Subpart GGG also contains test methods and procedures specific to pharmaceutical sources.
63.7(f)	Use of alternative test method	Yes	
63.7(g)	Data analysis, recordkeeping, and reporting.	Yes	
63.7(h)	Waiver of performance tests	Yes	
63.8(a)	Monitoring requirements	Yes	See § 63.1258.
63.8(b)(1)	Conduct of monitoring	Yes	
63.8(b)(2)	CMS and combined effluents	No	§ 63.1258 of subpart GGG provides specific CMS requirements.
63.8(b)(3)–(c)(4)	CMS requirements	Yes	§ 63.1259 also specifies recordkeeping for CMS.
63.8(c)(5)	COMS operation requirements	No.	
63.8 (c)(6)–(8)	CMS calibration and malfunction provisions.	No	Calibration procedures are provided in § 63.1258.
63.8(d)	CMS quality control program	Yes	
63.8(e)(1)	Performance evaluations of CMS	Yes	
63.8(e)(2)	Notification of performance evaluation	Yes	
63.8(e)(3–4)	CMS requirements/alternatives	Yes	
§ 63.8(e)(5)(i)	Reporting performance evaluation results.	Yes	See § 63.1260(a).
63.1260 (a)..			
63.8(e)(5)(ii)	Results of COMS performance evaluation.	No	Subpart GGG does not contain any opacity or visible emission standards.
63.8(f)–(g)	Alternative monitoring method/reduction of monitoring data.	Yes	
63.9(a)–(d)	Notification requirements—Applicability and general information.	Yes	§ 63.1260 (b) also specifies initial notification requirement.
63.9(e)	Notification of performance test	Yes	§ 63.1260 (l) also specifies notification requirement for performance test.
63.9(f)	Notification of opacity and visible emissions observations.	No	Subpart GGG does not contain any opacity or visible emission standards.
63.9(g)(1)	Additional notification requirements for sources with CMS.	Yes	§ 63.1260 (d) also specifies notification requirement for performance evaluation.
63.9(g)(2)	Notification of compliance with opacity emission standard.	No	Subpart GGG does not contain any opacity or visible emission standards.
63.9(g)(3)	Notification that criterion to continue use of alternative to relative accuracy testing has been exceeded.	Yes	§ 63.1260 (d) also specifies notification requirement for performance evaluation.
63.9(h)	Notification of compliance status	Yes	Specified in § 63.1260(f). Due 150 days after compliance date.
63.9(i)	Adjustment to time periods or postmark deadlines for submittal and review of required communications.	Yes	
63.9(j)	Change in information provided	No	Subpart GGG specifies procedures for notification of changes.
63.10(a)	Recordkeeping requirements	Yes.	
63.1259..			
63.10(b)(1)	Records retention	Yes	Also stated in § 63.1259.
63.10(b)(2)	Information and documentation to support notifications.	No	Subpart GGG specifies recordkeeping requirements.
63.10(b)(3)	Records retention for sources not subject to relevant standard.	Yes	Also stated in § 63.1259 (a)(2).
63.10(c)–(d)(2)	Other recordkeeping and reporting provisions.	Yes	Also stated in § 63.1259 (a)(4).
63.10(d)(3)	Reporting results of opacity or visible emissions observations.	No	Subpart GGG does not include any opacity or visible emission standards.
63.10(d)(4-5)	Other recordkeeping and reporting provisions.	Yes.	
63.10(e)	Additional CMS reporting requirements	Yes.	
63.10(f)	Waiver of recordkeeping or reporting requirements..	Yes.	
63.11	Control device requirements for flares	Yes.	
63.12	State authority and delegations	Yes	See § 63.1261.
63.13	Addresses of State air pollution control agencies.	Yes.	

General provisions reference	Summary of requirements	Applies to subpart GGG	Comments
63.14	Incorporations by reference	Yes.	
63.15	Availability of information and confidentiality.	Yes.	

[63 FR 50326, Sept. 21, 1998, as amended at 65 FR 52614, Aug. 29, 2000; 66 FR 40136, Aug. 2, 2001]

TABLE 2 TO SUBPART GGG OF PART 63—PARTIALLY SOLUBLE HAP

TABLE 2 TO SUBPART GGG.—PARTIALLY SOLUBLE HAP

1,1,1–Trichloroethane (methyl chloroform)	Chloroform
1,1,2,2-Tetrachloroethane	Chloromethane
1,1,2-Trichloroethane	Chloroprene
1,1-Dichloroethylene (vinylidene chloride)	Cumene
1,2-Dibromoethane	Dichloroethyl ether
1,2-Dichloroethane (ethylene dichloride)	Dinitrophenol
1,2-Dichloropropane	Epichlorohydrin
1,3-Dichloropropene	Ethyl acrylate
2,4,5-Trichlorophenol	Ethylbenzene
2-Butanone (mek)	Ethylene oxide
1,4-Dichlorobenzene	Hexachlorobenzene
2-Nitropropane	Hexachlorobutadiene
4–Methyl-2-pentanone (MIBK)	Hexachloroethane
Acetaldehyde	Methyl methacrylate
Acrolein	Methyl-t-butyl ether
Acrylonitrile	Methylene chloride
Allyl chloride	N,N-dimethylaniline
Benzene	Propionaldehyde
Benzyl chloride	Propylene oxide
Biphenyl	Styrene
Bromoform (tribromomethane)	Tetrachloroethene (perchloroethylene)
Bromomethane	Tetrachloromethane (carbon tetrachloride
Butadiene	Toluene
Carbon disulfide	Trichlorobenzene (1,2,4-)
Chlorobenzene	Trichloroethylene
Chloroethane (ethyl chloride)	Trimethylpentane
Vinyl acetate	Xylene (p)
Vinyl chloride	N-hexane
Xylene (m).	
Xylene (o).	

[66 FR 40136, Aug. 2, 2001]

TABLE 3 TO SUBPART GGG OF PART 63—SOLUBLE HAP

TABLE 3 TO SUBPART GGG.—SOLUBLE HAP

Compound
1,1-Dimethylhydrazine.
1,4-Dioxane.
Acetonitrile.
Acetophenone.
Diethyl sulfate.
Dimethyl sulfate.
Dinitrotoluene.

TABLE 3 TO SUBPART GGG.—SOLUBLE HAP—Continued

Compound
Ethylene glycol dimethyl ether.
Ethylene glycol monobutyl ether acetate.
Ethylene glycol monomethyl ether acetate.
Isophorone.
Methanol (methyl alcohol).
Nitrobenzene.
Toluidene.
Triethylamine.

[66 FR 40137, Aug. 2, 2001]

TABLE 4 TO SUBPART GGG OF PART 63—MONITORING REQUIREMENTS FOR CONTROL DEVICES [A]

Control device	Monitoring equipment required	Parameters to be monitored	Frequency
All control devices	1. Flow indicator installed at all bypass lines to the atmosphere and equipped with continuous recorder *or*.	1. Presence of flow diverted from the control device to the atmosphere *or*.	Hourly records of whether the flow indicator was operating and whether a diversion was detected at any time during each hour.
	2. Valves sealed closed with car-seal or lock-and-key configuration.	2. Monthly inspections of sealed valves.	Monthly.
Scrubber	Liquid flow rate or pressure drop mounting device. Also a pH monitor if the scrubber is used to control acid emissions.	1. Liquid flow rate into or out of the scrubber or the pressure drop across the scrubber.	1. Every 15 minutes.
		2. pH of effluent scrubber liquid.	2. Once a day.
Thermal incinerator	Temperature monitoring device installed in firebox or in ductwork immediately downstream of firebox [b].	Firebox temperature	Every 15 minutes.
Catalytic incinerator	Temperature monitoring device installed in gas stream immediately before and after catalyst bed.	Temperature difference across catalyst bed.	Every 15 minutes.
Flare	Heat sensing device installed at the pilot light.	Presence of a flame at the pilot light.	Every 15 minutes.
Boiler or process heater <44 mega watts and vent stream is not mixed with the primary fuel.	Temperature monitoring device installed in firebox [b].	Combustion temperature	Every 15 minutes.
Condenser	Temperature monitoring device installed at condenser exit.	Condenser exit (product side) temperature.	Every 15 minutes.
Carbon adsorber (nonregenerative).	None	Operating time since last replacement.	N/A.
Carbon adsorber (regenerative).	Stream flow monitoring device, *and*.	1. Total regeneration stream mass or volumetric flow during carbon bed regeneration cycle(s).	1. For each regeneration cycle, record the total regeneration stream mass or volumetric flow.
	Carbon bed temperature monitoring device.	2. Temperature of carbon bed after regeneration.	2. For each regeneration cycle, record the maximum carbon bed-temperature.
		3. Temperature of carbon bed within 15 minutes of completing any cooling cycle(s).	3. Within 15 minutes of completing any cooling cycle, record the carbon bed temperature.
		4. Operating time since end of last regeneration.	4. Operating time to be based on worst-case conditions.
		5. Check for bed poisoning	5. Yearly.

[a] As an alternative to the monitoring requirements specified in this table, the owner or operator may use a CEM meeting the requirements of Performance Specifications 8 or 9 of appendix B of part 60 to monitor TOC every 15 minutes.

[b] Monitor may be installed in the firebox or in the ductwork immediately downstream of the firebox before any substantial heat exchange is encountered.

TABLE 5 TO SUBPART GGG OF PART 63—CONTROL REQUIREMENTS FOR ITEMS OF EQUIPMENT THAT MEET THE CRITERIA OF § 63.1252(F)

Item of equipment	Control requirement [a]
Drain or drain hub	(a) Tightly fitting solid cover (TFSC); or
	(b) TFSC with a vent to either a process or to a control device meeting the requirements of § 63.1256(h)(2); or
	(c) Water seal with submerged discharge or barrier to protect discharge from wind.
Manhole [b]	(a) TFSC; or
	(b) TSFC with a vent to either a process or to a control device meeting the requirements of § 63.1256(h)(2); or

Item of equipment	Control requirement[a]
	(c) If the item is vented to the atmosphere, use a TFSC with a properly operating water seal at the entrance or exit to the item to restrict ventilation in the collection system. The vent pipe shall be at least 90 cm in length and not exceeding 10.2 cm in nominal inside diameter.
Lift station	(a) TFSC; or (b) TFSC with a vent to either a process or to a control device meeting the requirements of § 63.1256(h)(2); or (c) If the lift station is vented to the atmosphere, use a TFSC with a properly operating water seal at the entrance or exit to the item to restrict ventilation in the collection system. The vent pipe shall be at least 90 cm in length and not exceeding 10.2 cm in nominal inside diameter. The lift station shall be level controlled to minimize changes in the liquid level.
Trench	(a) TFSC; or (b) TFSC with a vent to either a process or to a control device meeting the requirements of § 63.1256(h)(2); or (c) If the item is vented to the atmosphere, use a TFSC with a properly operating water seal at the entrance or exit to the item to restrict ventilation in the collection system. The vent pipe shall be at least 90 cm in length and not exceeding 10.2 cm in nominal inside diameter.
Pipe	Each pipe shall have no visible gaps in joints, seals, or other emission interfaces.
Oil/Water separator	(a) Equip with a fixed roof and route vapors to a process or equip with a closed-vent system that routes vapors to a control device meeting the requirements of § 63.1256(h)(2); or (b) Equip with a floating roof that meets the equipment specifications of § 60.693(a)(1)(i), (a)(1)(ii), (a)(2), (a)(3), and (a)(4).
Tank	Maintain a fixed roof and consider vents as process vents.[c]

[a] Where a tightly fitting solid cover is required, it shall be maintained with no visible gaps or openings, except during periods of sampling, inspection, or maintenance.
[b] Manhole includes sumps and other points of access to a conveyance system.
[c] A fixed roof may have openings necessary for proper venting of the tank, such as pressure/vacuum vent, j-pipe vent.

[65 FR 52616, Aug. 29, 2000]

Table 6 to Subpart GGG of Part 63—Wastewater—Compliance Options for Wastewaster Tanks

Capacity, m^3	Maximum true vapor pressure, kPa	Control requirements
<75		§ 63.1256(b)(1).
>75 and <151	<13.1	§ 63.1256(b)(1).
	>13.1	§ 63.1256(b)(2).
>151	<5.2	§ 63.1256(b)(1).
	>5.2	§ 63.1256(b)(2).

Table 7 to Subpart GGG of Part 63—Wastewater—Inspection and Monitoring Requirements for Waste Management Units

To comply with	Inspection or monitoring requirement	Frequency of inspection or monitoring	Method
TANKS:			
63.1256(b)(3)(i)	Inspect fixed roof and all openings for leaks.	Initially Semiannually	Visual.
63.1256(b)(4)	Inspect floating roof in accordance with §§ 63.120(a)(2) and (a)(3).	See §§ 63.120(a)(2) and (a)(3).	Visual.
63.1256(b)(5)	Measure floating roof seal gaps in accordance with §§ 63.120(b)(2)(i) through (b)(4).		See § 63.120(b)(2)(i) through (b)(4).
	—Primary seal gaps	Initially Once every 5 years (annually if no secondary seal).	
	—Secondary seal gaps	Initially Semiannually	
63.1256(b)(7) 63.1256(b)(8)	Inspect wastewater tank for control equipment failures and improper work practices.	Initially Semiannually	Visual.
SURFACE IMPOUNDMENTS:			
63.1256(c)(1)(i)	Inspect cover and all openings for leaks.	Initially Semiannually	Visual.

To comply with	Inspection or monitoring requirement	Frequency of inspection or monitoring	Method
63.1256(c)(2)	Inspect surface impoundment for control equipment failures and improper work practices.	Initially Semiannually	Visual.
CONTAINERS:			
63.1256(d)(1)(i)	Inspect cover and all openings for leaks.	Initially Semiannually	Visual.
63.1256(d)(1)(ii)			
63.1256(d)(3)(i)	Inspect enclosure and all openings for leaks.	Initially Semiannually	Visual.
63.1256(d)(4)	Inspect container for control equipment failures and improper work practices.	Initially Semiannually	Visual.
INDIVIDUAL DRAIN SYSTEMS[a]:			
63.1256(e)(1)(i)	Inspect cover and all openings to ensure there are no gaps, cracks, or holes.	Initially Semiannually	Visual.
63.1256(e)(2)	Inspect individual drain system for control equipment failures and improper work practices.	Initially Semiannually	Visual.
63.1256(e)(4)(i)	Verify that sufficient water is present to properly maintain integrity of water seals.	Initially Semiannually	Visual.
63.1256(e)(4)(ii)	Inspect all drains using tightly-fitted caps or plugs to ensure caps and plugs are in place and properly installed.	Initially Semiannually	Visual.
63.1256(e)(5)(i)			
63.1256(e)(5)(ii)	Inspect all junction boxes to ensure covers are in place and have no visible gaps, cracks, or holes.	Initially Semiannually	Visual or smoke test or other means as specified.
63.1256(e)(5)(iii)	Inspect unburied portion of all sewer lines for cracks and gaps.	Initially Semiannually	Visual.
OIL-WATER SEPARATORS:			
63.1256(f)(2)(i)	Inspect fixed roof and all openings for leaks.	Initially Semiannually	Visual.
63.1256(f)(3)	Measure floating roof seal gaps in accordance with 40 CFR 60.696(d)(1).	Initially[b]	See 40 CFR 60.696(d)(1).
	—Primary seal gaps	Once every 5 years.	
63.1256(f)(3)	—Secondary seal gaps	Initially[b] Annually.	
63.1256(f)(4)	Inspect oil-water separator for control equipment failures and improper work practices.	Initially Semiannually	Visual.

[a] As specified in § 63.1256(e), the owner or operator shall comply with either the requirements of § 63.1256(e)(1) and (2) or § 63.1256(e)(4) and (5).
[b] Within 60 days of installation as specified in § 63.1256(f)(3).

Table 8 to Subpart GGG of Part 63—Fraction Measured (F_m) for HAP Compounds in Wastewater Streams

Chemical name	CAS No. [a]	F_m
Acetaldehyde	75070	1.00
Acetonitrile	75058	0.99
Acetophenone	98862	0.31
Acrolein	107028	1.00
Acrylonitrile	107131	1.00
Allyl chloride	107051	1.00
Benzene	71432	1.00
Benzyl chloride	100447	1.00
Biphenyl	92524	0.86
Bromoform	75252	1.00
Butadiene (1,3-)	106990	1.00
Carbon disulfide	75150	1.00
Carbon tetrachloride	56235	1.00
Chlorobenzene	108907	0.96

Chemical name	CAS No. [a]	F_m
Chloroform	67663	1.00
Chloroprene (2-Chloro-1,3-butadiene)	126998	1.00
Cumene	98828	1.00
Dichlorobenzene (p-1,4-)	106467	1.00
Dichloroethane (1,2-) (Ethylene dichloride)	107062	1.00
Dichloroethylether (Bis(2-Chloroethyl ether))	111444	0.76
Dichloropropene (1,3-)	542756	1.00
Diethyl sulfate	64675	0.0025
Dimethyl sulfate	77781	0.086
Dimethylaniline (N,N-)	121697	0.00080
Dimethylhydrazine (1,1-)	57147	0.38
Dinitrophenol (2,4-)	51285	0.0077
Dinitrotoluene (2,4-)	121142	0.085
Dioxane (1,4-) (1,4-Diethyleneoxide)	123911	0.87
Epichlorohydrin(1-Chloro-2,3-epoxypropane)	106898	0.94
Ethyl acrylate	140885	1.00
Ethylbenzene	100414	1.00
Ethyl chloride (Chloroethane)	75003	1.00
Ethylene dibromide (Dibromomethane)	106934	1.00
Ethylene glycol dimethyl ether	110714	0.86
Ethylene glycol monobutyl ether acetate	112072	0.043
Ethylene glycol monomethyl ether acetate	110496	0.093
Ethylene oxide	75218	1.00
Ethylidene dichloride (1,1-Dichloroethane)	75343	1.00
Hexachlorobenzene	118741	0.97
Hexachlorobutadiene	87683	0.88
Hexachloroethane	67721	0.50
Hexane	110543	1.00
Isophorone	78591	0.47
Methanol	67561	0.85
Methyl bromide (Bromomethane)	74839	1.00
Methyl chloride (Chloromethane)	74873	1.00
Methyl ethyl ketone (2-Butanone)	78933	0.99
Methyl isobutyl ketone (Hexone)	108101	0.98
Methyl methacrylate	80626	1.00
Methyl tert-butyl ether	1634044	1.00
Methylene chloride (Dichloromethane)	75092	1.00
Naphthalene	91203	0.99
Nitrobenzene	98953	0.39
Nitropropane (2-)	79469	0.99
Phosgene	75445	1.00
Propionaldehyde	123386	1.00
Propylene dichloride (1,2-Dichloropropane)	78875	1.00
Propylene oxide	75569	1.00
Styrene	100425	1.00
Tetrachloroethane (1,1,2,2-)	79345	1.00
Tetrachloroethylene (Perchloroethylene)	127184	1.00
Toluene	108883	1.00
Toluidine (o-)	95534	0.15
Trichlorobenzene (1,2,4-)	120821	1.00
Trichloroethane (1,1,1-) (Methyl chloroform)	71556	1.00
Trichloroethane (1,1,2-) (Vinyl Trichloride)	79005	0.98
Trichloroethylene	79016	1.00
Trichlorophenol (2,4,5-)	95954	1.00
Triethylamine	121448	1.00
Trimethylpentane (2,2,4-)	540841	1.00
Vinyl acetate	108054	1.00
Vinyl chloride (Chloroethylene)	75014	1.00
Vinylidene chloride (1,1-Dichloroethylene)	75354	1.00
Xylene (m-)	108383	1.00
Xylene (o-)	95476	1.00
Xylene (p-)	106423	1.00

[a] CAS numbers refer to the Chemical Abstracts Service registry number assigned to specific compounds, isomers, or mixtures of compounds.

TABLE 9 TO SUBPART GGG OF PART 63—DEFAULT BIORATES FOR SOLUBLE HAP

Compound name	Biorate (K1), L/g MLVSS-hr
Acetonitrile	0.100

Compound name	Biorate (K1), L/g MLVSS-hr
Acetophenone	0.538
Diethyl sulfate	0.105
Dimethyl hydrazine(1,1)	0.227
Dimethyl sulfate	0.178
Dinitrotoluene(2,4)	0.784
Dioxane(1,4)	0.393
Ethylene glycol dimethyl ether	0.364
Ethylene glycol monobutyl ether acetate	0.496
Ethylene glycol monomethyl ether acetate	0.159
Isophorone	0.598
Methanol	[a]
Nitrobenzene	2.300
Toluidine (-0)	0.859
Triethylamine	1.064

[a] For direct dischargers, the default biorate for methanol is 3.5 L/g MLVSS-hr; for indirect dischargers, the default biorate for methanol is 0.2 L/g MLVSS-hr.

[66 FR 40137, Aug. 2, 2001]

Subpart HHH—National Emission Standards for Hazardous Air Pollutants From Natural Gas Transmission and Storage Facilities

SOURCE: 64 FR 32648, June 17, 1999, unless otherwise noted.

§63.1270 Applicability and designation of affected source.

(a) This subpart applies to owners and operators of natural gas transmission and storage facilities that transport or store natural gas prior to entering the pipeline to a local distribution company or to a final end user (if there is no local distribution company), and that are major sources of hazardous air pollutants (HAP) emissions as defined in §63.1271. Emissions for major source determination purposes can be estimated using the maximum natural gas throughput calculated in either paragraph (a)(1) or (2) of this section and paragraphs (a)(3) and (4) of this section. As an alternative to calculating the maximum natural gas throughput, the owner or operator of a new or existing source may use the facility design maximum natural gas throughput to estimate the maximum potential emissions. Other means to determine the facility's major source status are allowed, provided the information is documented and recorded to the Administrator's satisfaction. A compressor station that transports natural gas prior to the point of custody transfer or to a natural gas processing plant (if present) is not considered a part of the natural gas transmission and storage source category. A facility that is determined to be an area source, but subsequently increases its emissions or its potential to emit above the major source levels (without first obtaining and complying with other limitations that keep its potential to emit HAP below major source levels), and becomes a major source, must comply thereafter with all applicable provisions of this subpart starting on the applicable compliance date specified in paragraph (d) of this section. Nothing in this paragraph is intended to preclude a source from limiting its potential to emit through other appropriate mechanisms that may be available through the permitting authority.

(1) Facilities that store natural gas or facilities that transport and store natural gas shall calculate maximum annual facility natural gas throughput using the following equation:

$$\text{Throughput} = \frac{8{,}760}{\left(\frac{1}{IR_{max}} + \frac{1}{WR_{max}}\right)}$$

Where:

Throughput = Maximum annual facilitywide natural gas throughput in cubic meters per year.

IR_{max} = Maximum facility injection rate in cubic meters per hour.

WR_{max} = Maximum facility withdrawal rate in cubic meters per hour.

8,760 = Maximum hours of operation per year.

(i)–(iii) [Reserved]

(2) Facilities that only transport natural gas shall calculate the maximum natural gas throughput as the highest annual natural gas throughput over the 5 years prior to June 17, 1999, multiplied by a factor of 1.2.

(3) The owner or operator shall maintain records of the annual facility natural gas throughput each year and upon request, submit such records to the Administrator. If the facility annual natural gas throughput increases above the maximum natural gas throughput calculated in paragraph (a)(1) or (a)(2) of this section, the maximum natural gas throughput must be recalculated using the higher throughput multiplied by a factor of 1.2.

(4) The owner or operator shall determine the maximum values for other parameters used to calculate potential emissions as the maximum over the same period for which maximum throughput is determined as specified in paragraph (a)(1) or (a)(2) of this section. These parameters shall be based on an annual average or the highest single measured value.

(b) The affected source is each glycol dehydration unit.

(c) The owner or operator of a facility that does not contain an affected source, as specified in paragraph (b) of this section, is not subject to the requirements of this subpart.

(d) The owner or operator of each affected source shall achieve compliance with the provisions of this subpart by the following dates:

(1) The owner or operator of an affected source, the construction or reconstruction of which commenced before February 6, 1998, shall achieve compliance with this provisions of the subpart no later than June 17, 2002 except as provided for in § 63.6(i). The owner or operator of an area source, the construction or reconstruction of which commenced before February 6, 1998, that increases its emissions of (or its potential to emit) HAP such that the source becomes a major source that is subject to this subpart shall comply with this subpart 3 years after becoming a major source.

(2) The owner or operator of an affected source, the construction or reconstruction of which commences on or after February 6, 1998, shall achieve compliance with the provisions of this subpart immediately upon initial startup or June 17, 1999, whichever date is later. Area sources, the construction or reconstruction of which commences on or after February 6, 1998, that become major sources shall comply with the provisions of this standard immediately upon becoming a major source.

(e) An owner or operator of an affected source that is a major source or is located at a major source and is subject to the provisions of this subpart is also subject to 40 CFR part 70 or part 71 permitting requirements.

(f) *Exemptions*. A facility with a facilitywide actual annual average natural gas throughput less than 28.3 thousand standard cubic meters per day, where glycol dehydration units are the only HAP emission source, is not subject to the requirements of this subpart. Records shall be maintained as required in § 63.10(b)(3).

[64 FR 32648, June 17, 1999, as amended at 66 FR 34555, June 29, 2001; 66 FR 49300, Sept. 27, 2001; 67 FR 8204, Feb. 22, 2002]

§ 63.1271 Definitions.

All terms used in this subpart shall have the meaning given to them in the Clean Air Act, subpart A of this part (General Provisions), and in this section. If the same term is defined in subpart A and in this section, it shall have the meaning given in this section for purposes of this subpart.

Boiler means an enclosed device using controlled flame combustion and having the primary purpose of recovering and exporting thermal energy in the form of steam or hot water. Boiler also means any industrial furnace as defined in 40 CFR 260.10.

Closed-vent system means a system that is not open to the atmosphere and is composed of piping, ductwork, connections, and if necessary, flow inducing devices that transport gas or vapor from an emission point to one or more control devices. If gas or vapor from regulated equipment is routed to a process (e.g., to a fuel gas system), the conveyance system shall not be considered a closed-vent system and is not subject to closed-vent system standards.

Combustion device means an individual unit of equipment, such as a flare, incinerator, process heater, or boiler, used for the combustion of organic HAP emissions.

Compressor station means any permanent combination of compressors that move natural gas at increased pressure from fields, in transmission pipelines, or into storage.

Continuous recorder means a data recording device that either records an instantaneous data value at least once every hour or records hourly or more frequent block average values.

Control device means any equipment used for recovering or oxidizing HAP or volatile organic compound (VOC) vapors. Such equipment includes, but is not limited to, absorbers, carbon absorbers, condensers, incinerators, flares, boilers, and process heaters. For the purposes of this subpart, if gas or vapor from regulated equipment is used, reused (i.e., injected into the flame zone of an enclosed combustion device), returned back to the process, or sold, then the recovery system used, including piping, connections, and flow inducing devices, is not considered to be a control device or a closed-vent system.

Custody transfer means the transfer of natural gas after processing and/or treatment in the production operations to pipelines or any other forms of transportation.

Facility means any grouping of equipment where natural gas is processed, compressed, or stored prior to entering a pipeline to a local distribution company or (if there is no local distribution company) to a final end user. Examples of a facility for this source category are: an underground natural gas storage operation; or a natural gas compressor station that receives natural gas via pipeline, from an underground natural gas storage operation, or from a natural gas processing plant. The emission points associated with these phases include, but are not limited to, process vents. Processes that may have vents include, but are not limited to, dehydration and compressor station engines.

Facility, for the purpose of a major source determination, means natural gas transmission and storage equipment that is located inside the boundaries of an individual surface site (as defined in this section) and is connected by ancillary equipment, such as gas flow lines or power lines. Equipment that is part of a facility will typically be located within close proximity to other equipment located at the same facility. Natural gas transmission and storage equipment or groupings of equipment located on different gas leases, mineral fee tracts, lease tracts, subsurface unit areas, surface fee tracts, or surface lease tracts shall not be considered part of the same facility.

Flame zone means the portion of the combustion chamber in a combustion device occupied by the flame envelope.

Flash tank. See the definition for gas-condensate-glycol (GCG) separator.

Flow indicator means a device which indicates whether gas flow is present in a line or whether the valve position would allow gas flow to be present in a line.

Gas-condensate-glycol (GCG) separator means a two-or three-phase separator through which the ''rich'' glycol stream of a glycol dehydration unit is passed to remove entrained gas and hydrocarbon liquid. The GCG separator is commonly referred to as a flash separator or flash tank.

Glycol dehydration unit means a device in which a liquid glycol (including, but not limited to, ethylene glycol, diethylene glycol, or triethylene glycol) absorbent directly contacts a natural gas stream and absorbs water in a contact tower or absorption column (absorber). The glycol contacts and absorbs water vapor and other gas stream constituents from the natural gas and becomes ''rich'' glycol. This glycol is then regenerated in the glycol dehydration unit reboiler. The ''lean'' glycol is then recycled.

Glycol dehydration unit baseline operations means operations representative of the glycol dehydration unit operations as of June 17, 1999. For the purposes of this subpart, for determining the percentage of overall HAP emission reduction attributable to process modifications, glycol dehydration unit baseline operations shall be parameter values (including, but not limited to, glycol circulation rate or glycol-HAP absorbency) that represent actual long-

term conditions (i.e., at least 1 year). Glycol dehydration units in operation for less than 1 year shall document that the parameter values represent expected long-term operating conditions had process modifications not been made.

Glycol dehydration unit process vent means the glycol dehydration unit reboiler vent and the vent from the GCG separator (flash tank), if present.

Glycol dehydration unit reboiler vent means the vent through which exhaust from the reboiler of a glycol dehydration unit passes from the reboiler to the atmosphere or to a control device.

Hazardous air pollutants or *HAP* means the chemical compounds listed in section 112(b) of the Clean Air Act (Act). All chemical compounds listed in section 112(b) of the Act need to be considered when making a major source determination. Only the HAP compounds listed in Table 1 of this subpart need to be considered when determining compliance.

Incinerator means an enclosed combustion device that is used for destroying organic compounds. Auxiliary fuel may be used to heat waste gas to combustion temperatures. Any energy recovery section is not physically formed into one manufactured or assembled unit with the combustion section; rather, the energy recovery section is a separate section following the combustion section and the two are joined by ducts or connections carrying flue gas. The above energy recovery section limitation does not apply to an energy recovery section used solely to preheat the incoming vent stream or combustion air.

Initial startup means the first time a new or reconstructed source begins production. For the purposes of this subpart, initial startup does not include subsequent startups (as defined in this section) of equipment, for example, following malfunctions or shutdowns.

Major source, as used in this subpart, shall have the same meaning as in § 63.2, except that:

(1) Emissions from any pipeline compressor station or pump station shall not be aggregated with emissions from other similar units, whether or not such units are in a contiguous area or under common control; and

(2) Emissions from processes, operations, and equipment that are not part of the same facility, as defined in this section, shall not be aggregated.

Natural gas means a naturally occurring mixture of hydrocarbon and nonhydrocarbon gases found in geologic formations beneath the earth's surface. The principal hydrocarbon constituent is methane.

Natural gas transmission means the pipelines used for the long distance transport of natural gas (excluding processing). Specific equipment used in natural gas transmission includes the land, mains, valves, meters, boosters, regulators, storage vessels, dehydrators, compressors, and their driving units and appurtenances, and equipment used for transporting gas from a production plant, delivery point of purchased gas, gathering system, storage area, or other wholesale source of gas to one or more distribution area(s).

No detectable emissions means no escape of HAP from a device or system to the atmosphere as determined by:

(1) Instrument monitoring results in accordance with the requirements of § 63.1282(b); and

(2) The absence of visible openings or defects in the device or system, such as rips, tears, or gaps.

Operating parameter value means a minimum or maximum value established for a control device or process parameter which, if achieved by itself or in combination with one or more other operating parameter values, indicates that an owner or operator has complied with an applicable operating parameter limitation, over the appropriate averaging period as specified in § 63.1282 (e) and (f).

Operating permit means a permit required by 40 CFR part 70 or part 71.

Organic monitoring device means an instrument used to indicate the concentration level of organic compounds exiting a control device based on a detection principle such as infra-red, photoionization, or thermal conductivity.

Primary fuel means the fuel that provides the principal heat input (i.e., more than 50 percent) to the device. To

be considered primary, the fuel must be able to sustain operation without the addition of other fuels.

Process heater means an enclosed device using a controlled flame, the primary purpose of which is to transfer heat to a process fluid or process material that is not a fluid, or to a heat transfer material for use in a process (rather than for steam generation) .

Safety device means a device that meets both of the following conditions: the device is not used for planned or routine venting of liquids, gases, or fumes from the unit or equipment on which the device is installed; and the device remains in a closed, sealed position at all times except when an unplanned event requires that the device open for the purpose of preventing physical damage or permanent deformation of the unit or equipment on which the device is installed in accordance with good engineering and safety practices for handling flammable, combustible, explosive, or other hazardous materials. Examples of unplanned events which may require a safety device to open include failure of an essential equipment component or a sudden power outage.

Shutdown means for purposes including, but not limited to, periodic maintenance, replacement of equipment, or repair, the cessation of operation of a glycol dehydration unit, or other affected source under this subpart, or equipment required or used solely to comply with this subpart.

Startup means the setting into operation of a glycol dehydration unit, or other affected equipment under this subpart, or equipment required or used to comply with this subpart. Startup includes initial startup and operation solely for the purpose of testing equipment.

Storage vessel means a tank or other vessel that is designed to contain an accumulation of crude oil, condensate, intermediate hydrocarbon liquids, produced water, or other liquid, and is constructed primarily of non-earthen materials (e.g., wood, concrete, steel, plastic) that provide structural support.

Surface site means any combination of one or more graded pad sites, gravel pad sites, foundations, platforms, or the immediate physical location upon which equipment is physically affixed.

Temperature monitoring device means an instrument used to monitor temperature and having a minimum accuracy of ±2 percent of the temperature being monitored expressed in °C, or ±2.5 °C, whichever is greater. The temperature monitoring device may measure temperature in degrees Fahrenheit or degrees Celsius, or both.

Total organic compounds or *TOC*, as used in this subpart, means those compounds which can be measured according to the procedures of Method 18, 40 CFR part 60, appendix A.

Underground storage means the subsurface facilities utilized for storing natural gas that has been transferred from its original location for the primary purpose of load balancing, which is the process of equalizing the receipt and delivery of natural gas. Processes and operations that may be located at an underground storage facility include, but are not limited to, compression and dehydration.

[64 FR 32648, June 17, 1999, as amended at 66 FR 34555, June 29, 2001]

§63.1272 Startups, shutdowns, and malfunctions.

(a) The provisions set forth in this subpart shall apply at all times except during startups or shutdowns, during malfunctions, and during periods of non-operation of the affected sources (or specific portion thereof) resulting in cessation of the emissions to which this subpart applies. However, during the startup, shutdown, malfunction, or period of non-operation of one portion of an affected source, all emission points which can comply with the specific provisions to which they are subject must do so during the startup, shutdown, malfunction, or period of non-operation.

(b) The owner or operator shall not shut down items of equipment that are required or utilized for compliance with the provisions of this subpart during times when emissions are being routed to such items of equipment, if the shutdown would contravene requirements of this subpart applicable to such items of equipment. This paragraph does not apply if the item of equipment is malfunctioning, or if the

owner or operator must shut down the equipment to avoid damage due to a contemporaneous startup, shutdown, or malfunction of the affected source or a portion thereof.

(c) During startups, shutdowns, and malfunctions when the requirements of this subpart do not apply pursuant to paragraphs (a) and (b) of this section, the owner or operator shall implement, to the extent reasonably available, measures to prevent or minimize excess emissions to the maximum extent practical. For purposes of this paragraph, the term ''excess emissions'' means emissions in excess of those that would have occurred if there were no startup, shutdown, or malfunction, and the owner or operator complied with the relevant provisions of this subpart. The measures to be taken shall be identified in the applicable startup, shutdown, and malfunction plan, and may include, but are not limited to, air pollution control technologies, recovery technologies, work practices, pollution prevention, monitoring, and/or changes in the manner of operation of the source. Back-up control devices are not required, but may be used if available.

(d) Except as provided in paragraph (e) of this section, the owner or operator shall prepare a startup, shutdown, or malfunction plan as required in § 63.6(e)(3), except that the plan is not required to be incorporated by reference into the source's title V permit as specified in § 63.6(e)(3)(i). Instead, the owner or operator shall keep the plan on record as required by § 63.6(e)(3)(v). The failure of the plan to adequately minimize emissions during the startup, shutdown, or malfunction does not shield an owner or operator from enforcement actions.

(e) Owners or operators are exempt from the requirements to prepare a startup, shutdown, or malfunction plan for any facility where all of the affected sources meet the exemption criteria specified in § 63.1274(d).

[64 FR 32648, June 17, 1999, as amended at 66 FR 34555, June 29, 2001]

§ 63.1273 [Reserved]

§ 63.1274 General standards.

(a) Table 2 of this subpart specifies the provisions of subpart A (General Provisions) that apply and those that do not apply to owners and operators of affected sources subject to this subpart.

(b) All reports required under this subpart shall be sent to the Administrator at the appropriate address listed in § 63.13. Reports may be submitted on electronic media.

(c) Except as specified in paragraph (d) of this section, the owner or operator of an affected source (i.e., glycol dehydration unit) located at an existing or new major source of HAP emissions shall comply with the requirements in this subpart as follows:

(1) The control requirements for glycol dehydration unit process vents specified in § 63.1275;

(2) The monitoring requirements specified in § 63.1283, and

(3) The recordkeeping and reporting requirements specified in §§ 63.1284 and 63.1285.

(d) *Exemptions*. The owner or operator is exempt from the requirements of paragraph (c) of this section if the criteria listed in paragraph (d)(1) or (2) of this section are met, except that the records of the determination of these criteria must be maintained as required in § 63.1284(d).

(1) The actual annual average flow of gas to the glycol dehydration unit is less than 283.0 thousand standard cubic meters per day, as determined by the procedures specified in § 63.1282(a)(1); or

(2) The actual average emissions of benzene from the glycol dehydration unit process vents to the atmosphere are less than 0.90 megagram per year as determined by the procedures specified in § 63.1282(a)(2) of this subpart.

(e) Each owner or operator of a major HAP source subject to this subpart is required to apply for a part 70 or part 71 operating permit from the appropriate permitting authority. If the Administrator has approved a State operating permit program under part 70, the permit shall be obtained from the State authority. If a State operating permit program has not been approved, the owner or operator shall apply to the EPA Regional Office pursuant to part 71.

(f) [Reserved]

(g) In all cases where the provisions of this subpart require an owner or operator to repair leaks by a specified time after the leak is detected, it is a violation of this standard to fail to take action to repair the leak(s) within the specified time. If action is taken to repair the leak(s) within the specified time, failure of that action to successfully repair the leak(s) is not a violation of this standard. However, if the repairs are unsuccessful, a leak is detected and the owner or operator shall take further action as required by the applicable provisions of this subpart.

[64 FR 32648, June 17, 1999, as amended at 66 FR 34556, June 29, 2001]

§63.1275 Glycol dehydration unit process vent standards.

(a) This section applies to each glycol dehydration unit subject to this subpart with an actual annual average natural gas flowrate equal to or greater than 283.0 thousand standard cubic meters per day and with actual average benzene glycol dehydration unit process vent emissions equal to or greater than 0.90 megagrams per year.

(b) Except as provided in paragraph (c) of this section, an owner or operator of a glycol dehydration unit process vent shall comply with the requirements specified in paragraphs (b)(1) and (b)(2) of this section.

(1) For each glycol dehydration unit process vent, the owner or operator shall control air emissions by either paragraph (b)(1)(i) or (b)(1)(ii) of this section.

(i) The owner or operator shall connect the process vent to a control device or a combination of control devices through a closed-vent system. The closed-vent system shall be designed and operated in accordance with the requirements of §63.1281(c). The control device(s) shall be designed and operated in accordance with the requirements of §63.1281(d).

(ii) The owner or operator shall connect the process vent to a control device or a combination of control devices through a closed-vent system and the outlet benzene emissions from the control device(s) shall be less than 0.90 megagrams per year. The closed-vent system shall be designed and operated in accordance with the requirements of §63.1281(c). The control device(s) shall be designed and operated in accordance with the requirements of §63.1281(d), except that the performance requirements specified in §63.1281(d)(1)(i) and (ii) do not apply.

(2) One or more safety devices that vent directly to the atmosphere may be used on the air emission control equipment installed to comply with paragraph (b)(1) of this section.

(c) As an alternative to the requirements of paragraph (b) of this section, the owner or operator may comply with one of the following:

(1) The owner or operator shall control air emissions by connecting the process vent to a process natural gas line.

(2) The owner or operator shall demonstrate, to the Administrator's satisfaction, that the total HAP emissions to the atmosphere from the glycol dehydration unit process vent are reduced by 95.0 percent through process modifications or a combination of process modifications and one or more control devices, in accordance with the requirements specified in §63.1281(e).

(3) Control of HAP emissions from a GCG separator (flash tank) vent is not required if the owner or operator demonstrates, to the Administrator's satisfaction, that total emissions to the atmosphere from the glycol dehydration unit process vent are reduced by one of the levels specified in paragraph (c)(3)(i) or (ii) through the installation and operation of controls as specified in paragraph (b)(1) of this section.

(i) HAP emissions are reduced by 95.0 percent or more.

(ii) Benzene emissions are reduced to a level less than 0.90 megagrams per year.

[64 FR 32648, June 17, 1999, as amended at 66 FR 34556, June 29, 2001]

§§63.1276–63.1280 [Reserved]

§63.1281 Control equipment requirements.

(a) This section applies to each closed-vent system and control device installed and operated by the owner or operator to control air emissions as required by the provisions of this subpart. Compliance with paragraphs (c)

and (d) of this section will be determined by review of the records required by § 63.1284, the reports required by § 63.1285, by review of performance test results, and by inspections.

(b) [Reserved]

(c) *Closed-vent system requirements.* (1) The closed-vent system shall route all gases, vapors, and fumes emitted from the material in a HAP emissions unit to a control device that meets the requirements specified in paragraph (d) of this section.

(2) The closed-vent system shall be designed and operated with no detectable emissions.

(3) If the closed-vent system contains one or more bypass devices that could be used to divert all or a portion of the gases, vapors, or fumes from entering the control device, the owner or operator shall meet the requirements specified in paragraphs (c)(3)(i) and (c)(3)(ii) of this section.

(i) For each bypass device, except as provided for in paragraph (c)(3)(ii) of this section, the owner or operator shall either:

(A) Properly install, calibrate, maintain, and operate a flow indicator at the inlet to the bypass device that could divert the stream away from the control device to the atmosphere that takes a reading at least once every 15 minutes, and that sounds an alarm when the bypass device is open such that the stream is being, or could be, diverted away from the control device to the atmosphere; or

(B) Secure the bypass device valve installed at the inlet to the bypass device in the non-diverting position using a car-seal or a lock-and-key type configuration. The owner or operator shall visually inspect the seal or closure mechanism at least once every month to verify that the valve is maintained in the non-diverting position and the vent stream is not diverted through the bypass device.

(ii) Low leg drains, high point bleeds, analyzer vents, open-ended valves or lines, and safety devices are not subject to the requirements of paragraph (c)(3)(i) of this section.

(d) *Control device requirements.* (1) The control device used to reduce HAP emissions in accordance with the standards of this subpart shall be one of the control devices specified in paragraphs (d)(1)(i) through (iii) of this section.

(i) An enclosed combustion device (e.g., thermal vapor incinerator, catalytic vapor incinerator, boiler, or process heater) that is designed and operated in accordance with one of the following performance requirements:

(A) Reduces the mass content of either TOC or total HAP in the gases vented to the device by 95.0 percent by weight or greater, as determined in accordance with the requirements of § 63.1282(d);

(B) Reduces the concentration of either TOC or total HAP in the exhaust gases at the outlet to the device to a level equal to or less than 20 parts per million by volume on a dry basis corrected to 3 percent oxygen as determined in accordance with the requirements of § 63.1282(d); or

(C) Operates at a minimum residence time of 0.5 second at a minimum temperature of 760 °C.

(D) If a boiler or process heater is used as the control device, then the vent stream shall be introduced into the flame zone of the boiler or process heater.

(ii) A vapor recovery device (e.g., carbon adsorption system or condenser) or other control device that is designed and operated to reduce the mass content of either TOC or total HAP in the gases vented to the device by 95.0 percent by weight or greater as determined in accordance with the requirements of § 63.1282(d).

(iii) A flare that is designed and operated in accordance with the requirements of § 63.11(b).

(2) [Reserved]

(3) The owner or operator shall demonstrate that a control device achieves the performance requirements of paragraph (d)(1) of this section by following the procedures specified in § 63.1282(d).

(4) The owner or operator shall operate each control device in accordance with the requirements specified in paragraphs (d)(4)(i) and (ii) of this section.

(i) Each control device used to comply with this subpart shall be operating at all times when gases, vapors, and fumes are vented from the emissions unit or units through the closed-vent

system to the control device, as required under §63.1275, except when maintenance or repair of a unit cannot be completed without a shutdown of the control device. An owner or operator may vent more than one unit to a control device used to comply with this subpart.

(ii) For each control device monitored in accordance with the requirements of §63.1283(d), the owner or operator shall demonstrate compliance according to the requirements of §63.1282(e), or (f) as applicable.

(5) For each carbon adsorption system used as a control device to meet the requirements of paragraph (d)(1) of this section, the owner or operator shall manage the carbon as follows:

(i) Following the initial startup of the control device, all carbon in the control device shall be replaced with fresh carbon on a regular, predetermined time interval that is no longer than the carbon service life established for the carbon adsorption system.

(ii) The spent carbon removed from the carbon adsorption system shall be either regenerated, reactivated, or burned in one of the units specified in paragraphs (d)(5)(ii)(A) through (d)(5)(ii)(G) of this section.

(A) Regenerated or reactivated in a thermal treatment unit for which the owner or operator has been issued a final permit under 40 CFR part 270 that implements the requirements of 40 CFR part 264, subpart X.

(B) Regenerated or reactivated in a thermal treatment unit equipped with and operating organic air emission controls in accordance with this section.

(C) Regenerated or reactivated in a thermal treatment unit equipped with and operating organic air emission controls in accordance with a national emissions standard for HAP under another subpart in 40 CFR part 61 or this part.

(D) Burned in a hazardous waste incinerator for which the owner or operator has been issued a final permit under 40 CFR part 270 that implements the requirements of 40 CFR part 264, subpart O.

(E) Burned in a hazardous waste incinerator which the owner or operator has designed and operates in accordance with the requirements of 40 CFR part 265, subpart O.

(F) Burned in a boiler or industrial furnace for which the owner or operator has been issued a final permit under 40 CFR part 270 that implements the requirements of 40 CFR part 266, subpart H.

(G) Burned in a boiler or industrial furnace which the owner or operator has designed and operates in accordance with the interim status requirements of 40 CFR part 266, subpart H.

(e) *Process modification requirements.* Each owner or operator that chooses to comply with §63.1275(c)(2) shall meet the requirements specified in paragraphs (e)(1) through (e)(3) of this section.

(1) The owner or operator shall determine glycol dehydration unit baseline operations (as defined in §63.1271). Records of glycol dehydration unit baseline operations shall be retained as required under §63.1284(b)(9).

(2) The owner or operator shall document, to the Administrator's satisfaction, the conditions for which glycol dehydration unit baseline operations shall be modified to achieve the 95.0 percent overall HAP emission reduction, either through process modifications or through a combination of process modifications and one or more control devices. If a combination of process modifications and one or more control devices are used, the owner or operator shall also establish the percent HAP reduction to be achieved by the control device to achieve an overall HAP emission reduction of 95.0 percent for the glycol dehydration unit process vent. Only modifications in glycol dehydration unit operations directly related to process changes, including but not limited to changes in glycol circulation rate or glycol-HAP absorbency, shall be allowed. Changes in the inlet gas characteristics or natural gas throughput rate shall not be considered in determining the overall HAP emission reduction due to process modifications.

(3) The owner or operator that achieves a 95.0 percent HAP emission reduction using process modifications alone shall comply with paragraph (e)(3)(i) of this section. The owner or operator that achieves a 95.0 percent

HAP emission reduction using a combination of process modifications and one or more control devices shall comply with paragraphs (e)(3)(i) and (e)(3)(ii) of this section.

(i) The owner or operator shall maintain records, as required in § 63.1284(b)(10), that the facility continues to operate in accordance with the conditions specified under paragraph (e)(2) of this section.

(ii) The owner or operator shall comply with the control device requirements specified in paragraph (d) of this section, except that the emission reduction achieved shall be the emission reduction specified in paragraph (e)(2) of this section.

[64 FR 32648, June 17, 1999, as amended at 66 FR 34556, June 29, 2001]

§ 63.1282 Test methods, compliance procedures, and compliance demonstrations.

(a) *Determination of glycol dehydration unit flowrate or benzene emissions.* The procedures of this paragraph shall be used by an owner or operator to determine glycol dehydration unit natural gas flowrate or benzene emissions to meet the criteria for the exemption from control requirements under § 63.1274(d).

(1) The determination of actual flowrate of natural gas to a glycol dehydration unit shall be made using the procedures of either paragraph (a)(1)(i) or (a)(1)(ii) of this section.

(i) The owner or operator shall install and operate a monitoring instrument that directly measures natural gas flowrate to the glycol dehydration unit with an accuracy of plus or minus 2 percent or better. The owner or operator shall convert the annual natural gas flowrate to a daily average by dividing the annual flowrate by the number of days per year the glycol dehydration unit processed natural gas.

(ii) The owner or operator shall document, to the Administrator's satisfaction, that the actual annual average natural gas flowrate to the glycol dehydration unit is less than 283.0 thousand standard cubic meters per day.

(2) The determination of actual average benzene emissions from a glycol dehydration unit shall be made using the procedures of either paragraph (a)(2)(i) or (a)(2)(ii) of this section. Emissions shall be determined either uncontrolled or with federally enforceable controls in place.

(i) The owner or operator shall determine actual average benzene emissions using the model GRI–GLYCalc™, Version 3.0 or higher, and the procedures presented in the associated GRI–GLYCalc™ Technical Reference Manual. Inputs to the model shall be representative of actual operating conditions of the glycol dehydration unit and may be determined using the procedures documented in the Gas Research Institute (GRI) report entitled ''Atmospheric Rich/Lean Method for Determining Glycol Dehydrator Emissions'' (GRI–95/0368.1); or

(ii) The owner or operator shall determine an average mass rate of benzene emissions in kilograms per hour through direct measurement by performing three runs of Method 18 in 40 CFR part 60, appendix A (or an equivalent method), and averaging the results of the three runs. Annual emissions in kilograms per year shall be determined by multiplying the mass rate by the number of hours the unit is operated per year. This result shall be converted to megagrams per year.

(b) *No detectable emissions test procedure.* (1) The procedure shall be conducted in accordance with Method 21, 40 CFR part 60, appendix A.

(2) The detection instrument shall meet the performance criteria of Method 21, 40 CFR part 60, appendix A, except the instrument response factor criteria in section 3.1.2(a) of Method 21 shall be for the average composition of the fluid, and not for each individual organic compound in the stream.

(3) The detection instrument shall be calibrated before use on each day of its use by the procedures specified in Method 21, 40 CFR part 60, appendix A.

(4) Calibration gases shall be as follows:

(i) Zero air (less than 10 parts per million by volume hydrocarbon in air); and

(ii) A mixture of methane in air at a methane concentration of less than 10,000 parts per million by volume.

(5) An owner or operator may choose to adjust or not adjust the detection instrument readings to account for the

background organic concentration level. If an owner or operator chooses to adjust the instrument readings for the background level, the background level value must be determined according to the procedures in Method 21 of 40 CFR part 60, appendix A.

(6)(i) Except as provided in paragraph (b)(6)(ii) of this section, the detection instrument shall meet the performance criteria of Method 21 of 40 CFR part 60, appendix A, except the instrument response factor criteria in section 3.1.2(a) of Method 21 shall be for the average composition of the process fluid not each individual volatile organic compound in the stream. For process streams that contain nitrogen, air, or other inerts which are not organic HAP or VOC, the average stream response factor shall be calculated on an inert-free basis.

(ii) If no instrument is available at the facility that will meet the performance criteria specified in paragraph (b)(6)(i) of this section, the instrument readings may be adjusted by multiplying by the average response factor of the process fluid, calculated on an inert-free basis as described in paragraph (b)(6)(i) of this section.

(7) An owner or operator must determine if a potential leak interface operates with no detectable emissions using the applicable procedure specified in paragraph (b)(7)(i) or (b)(7)(ii) of this section.

(i) If an owner or operator chooses not to adjust the detection instrument readings for the background organic concentration level, then the maximum organic concentration value measured by the detection instrument is compared directly to the applicable value for the potential leak interface as specified in paragraph (b)(8) of this section.

(ii) If an owner or operator chooses to adjust the detection instrument readings for the background organic concentration level, the value of the arithmetic difference between the maximum organic concentration value measured by the instrument and the background organic concentration value as determined in paragraph (b)(5) of this section is compared with the applicable value for the potential leak interface as specified in paragraph (b)(8) of this section.

(8) A potential leak interface is determined to operate with no detectable organic emissions if the organic concentration value determined in paragraph (b)(7) is less than 500 parts per million by volume.

(c) [Reserved]

(d) *Control device performance test procedures.* This paragraph applies to the performance testing of control devices. The owners or operators shall demonstrate that a control device achieves the performance requirements of §63.1281(d)(1) or (e)(3)(ii) using either a performance test as specified in paragraph (d)(3) of this section or a design analysis as specified in paragraph (d)(4) of this section. The owner or operator may elect to use the alternative procedures in paragraph (d)(5) of this section for performance testing of a condenser used to control emissions from a glycol dehydration unit process vent.

(1) The following control devices are exempt from the requirements to conduct performance tests and design analyses under this section:

(i) Except as specified in paragraph (d)(2) of this section, a flare that is designed and operated in accordance with §63.11(b);

(ii) A boiler or process heater with a design heat input capacity of 44 megawatts or greater;

(iii) A boiler or process heater into which the vent stream is introduced with the primary fuel or is used as the primary fuel;

(iv) A boiler or process heater burning hazardous waste for which the owner or operator has either been issued a final permit under 40 CFR part 270 and complies with the requirements of 40 CFR part 266, subpart H, or has certified compliance with the interim status requirements of 40 CFR part 266, subpart H;

(v) A hazardous waste incinerator for which the owner or operator has been issued a final permit under 40 CFR part 270 and complies with the requirements of 40 CFR part 264, subpart O, or has certified compliance with the interim status requirements of 40 CFR part 265, subpart O.

(vi) A control device for which a performance test was conducted for determining compliance with a regulation promulgated by the EPA, and the test was conducted using the same methods specified in this section, and either no process changes have been made since the test, or the owner or operator can demonstrate that the results of the performance test, with or without adjustments, reliably demonstrate compliance despite process changes.

(2) An owner or operator shall design and operate each flare in accordance with the requirements specified in § 63.11(b) and in paragraphs (d)(2)(i) and (d)(2)(ii) of this section.

(i) The compliance determination shall be conducted using Method 22 of 40 CFR part 60, appendix A, to determine visible emissions.

(ii) An owner or operator is not required to conduct a performance test to determine percent emission reduction or outlet organic HAP or TOC concentration when a flare is used.

(3) For a performance test conducted to demonstrate that a control device meets the requirements of § 63.1281(d)(1) or (e)(3)(ii), the owner or operator shall use the test methods and procedures specified in paragraphs (d)(3)(i) through (iv) of this section. The performance test results shall be submitted in the Notification of Compliance Status Report as required in § 63.1285(d)(1)(ii).

(i) Method 1 or 1A, 40 CFR part 60, appendix A, as appropriate, shall be used for selection of the sampling sites specified in paragraphs (d)(3)(i)(A) and (B) of this section. Any references to particulate mentioned in Methods 1 and 1A do not apply to this section.

(A) To determine compliance with the control device percent reduction requirements specified in § 63.1281(d)(1)(i)(A),(d)(1)(ii), or (e)(3)(ii), sampling sites shall be located at the inlet of the first control device and at the outlet of the final control device.

(B) To determine compliance with the enclosed combustion device total HAP concentration limit specified in § 63.1281(d)(1)(i)(B), the sampling site shall be located at the outlet of the device.

(ii) The gas volumetric flowrate shall be determined using Method 2, 2A, 2C, or 2D, 40 CFR part 60, appendix A, as appropriate.

(iii) To determine compliance with the control device percent reduction performance requirement in § 63.1281(d)(1)(i)(A), 63.1281(d)(1)(ii), or 63.1281(e)(3)(ii), the owner or operator shall use either Method 18, 40 CFR part 60, appendix A, or Method 25A, 40 CFR part 60, appendix A; alternatively, any other method or data that have been validated according to the applicable procedures in Method 301 of appendix A of this part may be used. The following procedures shall be used to calculate the percentage of reduction:

(A) The minimum sampling time for each run shall be 1 hour in which either an integrated sample or a minimum of four grab samples shall be taken. If grab sampling is used, then the samples shall be taken at approximately equal intervals in time, such as 15-minute intervals during the run.

(B) The mass rate of either TOC (minus methane and ethane) or total HAP (E_i, E_o) shall be computed using the equations and procedures specified in paragraphs (d)(3)(iii)(B)(*1*) through (*3*) of this section. As an alternative, the mass rate of either TOC (minus methane and ethane) or total HAP at the inlet of the control device (E_i) may be calculated using the procedures specified in paragraph (d)(3)(iii)(B)(*4*) of this section.

(*1*) The following equations shall be used:

$$E_i = K_2\left(\sum_{j=1}^{n} C_{ij}M_{ij}\right)Q_i$$

$$E_o = K_2\left(\sum_{j=1}^{n} C_{oj}M_{oj}\right)Q_o$$

Where:

C_{ij}, C_{oj} = Concentration of sample component j of the gas stream at the inlet and outlet of the control device, respectively, dry basis, parts per million by volume.

E_i, E_o = Mass rate of TOC (minus methane and ethane) or total HAP at the inlet and outlet of the control device, respectively, dry basis, kilogram per hour.

M_{ij}, M_{oj} = Molecular weight of sample component j of the gas stream at the inlet and

outlet of the control device, respectively, gram/gram-mole.

Q_i, Q_o = Flowrate of gas stream at the inlet and outlet of the control device, respectively, dry standard cubic meter per minute.

K_2 = Constant, 2.494×10^{-6} (parts per million)$^{-1}$ (gram-mole per standard cubic meter) (kilogram/gram) (minute/hour), where standard temperature is 20°C.

n = Number of components in sample.

(*2*) When the TOC mass rate is calculated, all organic compounds (minus methane and ethane) measured by Method 18, of 40 CFR part 60, appendix A; or Method 25A, 40 CFR part 60, appendix A, shall be summed using the equations in paragraph (d)(3)(iii)(B)(*1*) of this section.

(*3*) When the total HAP mass rate is calculated, only HAP chemicals listed in Table 1 of this subpart shall be summed using the equations in paragraph (d)(3)(iii)(B)(*1*) of this section.

(*4*) As an alternative to the procedures for calculating E_i specified in paragraph (d)(3)(iii)(B)(*1*) of this section, the owner or operator may use the model GRI-GLYCalc™, Version 3.0 or higher, and the procedures presented in the associated GRI-GLYCalc™ Technical Reference Manual. Inputs to the model shall be representative of actual operating conditions of the glycol dehydration unit and shall be determined using the procedures documented in the Gas Research Institute (GRI) report entitled ''Atmospheric Rich/Lean Method for Determining Glycol Dehydrator Emissions'' (GRI–95/0368.1). When the TOC mass rate is calculated for glycol dehydration units using the model GRI-GLYCalc™, all organic compounds (minus methane and ethane) measured by Method 18, 40 CFR part 60, appendix A, or Method 25A, 40 CFR part 60, appendix A, shall be summed. When the total HAP mass rate is calculated for glycol dehydration units using the model GRI-GLYCalc™, only HAP chemicals listed in Table 1 of this subpart shall be summed.

(C) The percentage of reduction in TOC (minus methane and ethane) or total HAP shall be calculated as follows:

$$R_{cd} = \frac{E_i - E_o}{E_i} \times 100\%$$

Where:

R_{cd} = Control efficiency of control device, percent.

E_i = Mass rate of TOC (minus methane and ethane) or total HAP at the inlet to the control device as calculated under paragraph (d)(3)(iii)(B) of this section, kilograms TOC per hour or kilograms HAP per hour.

E_o = Mass rate of TOC (minus methane and ethane) or total HAP at the outlet of the control device, as calculated under paragraph (d)(3)(iii)(B) of this section, kilograms TOC per hour or kilograms HAP per hour.

(D) If the vent stream entering a boiler or process heater with a design capacity less than 44 megawatts is introduced with the combustion air or as a secondary fuel, the weight-percentage of reduction of total HAP or TOC (minus methane and ethane) across the device shall be determined by comparing the TOC (minus methane and ethane) or total HAP in all combusted vent streams and primary and secondary fuels with the TOC (minus methane and ethane) or total HAP exiting the device, respectively.

(iv) To determine compliance with the enclosed combustion device total HAP concentration limit specified in §63.1281(d)(1)(i)(B), the owner or operator shall use either Method 18, 40 CFR part 60, appendix A; or Method 25A, 40 CFR part 60, appendix A, to measure either TOC (minus methane and ethane) or total HAP. Alternatively, any other method or data that have been validated according to Method 301 of appendix A of this part, may be used. The following procedures shall be used to calculate parts per million by volume concentration, corrected to 3 percent oxygen:

(A) The minimum sampling time for each run shall be 1 hour in which either an integrated sample or a minimum of four grab samples shall be taken. If grab sampling is used, then the samples shall be taken at approximately equal intervals in time, such as 15-minute intervals during the run.

(B) The TOC concentration or total HAP concentration shall be calculated

according to paragraph (d)(3)(iv)(B)(*1*) or (d)(3)(iv)(B)(*2*) of this section.

(*1*) The TOC concentration (C_{TOC}) is the sum of the concentrations of the individual components and shall be computed for each run using the following equation:

$$C_{TOC} = \sum_{i=1}^{x} \frac{\left(\sum_{j=1}^{n} C_{ji}\right)}{x}$$

Where:

C_{TOC} = Concentration of total organic compounds minus methane and ethane, dry basis, parts per million by volume.

C_{ji} = Concentration of sample components j of sample i, dry basis, parts per million by volume.

n = Number of components in the sample.

x = Number of samples in the sample run.

(*2*) The total HAP concentration (C_{HAP}) shall be computed according to the equation in paragraph (d)(3)(iv)(B)(*1*) of this section, except that only HAP chemicals listed in Table 1 of this subpart shall be summed.

(C) The TOC concentration or total HAP concentration shall be corrected to 3 percent oxygen as follows:

(*1*) The emission rate correction factor for excess air, integrated sampling and analysis procedures of Method 3B, 40 CFR part 60, appendix A, shall be used to determine the oxygen concentration ($\%O_{2d}$). The samples shall be taken during the same time that the samples are taken for determining TOC concentration or total HAP concentration.

(*2*) The concentration corrected to 3 percent oxygen (C_c) shall be computed using the following equation:

$$C_c = C_m\left(\frac{17.9}{20.9 - \%O_{2d}}\right)$$

Where:

C_c = TOC concentration of total HAP concentration corrected to 3 percent oxygen, dry basis, parts per million by volume.

C_m = TOC concentration or total HAP concentration, dry basis, parts per million by volume.

$\%O_{2d}$ = Concentration of oxygen, dry basis, percent by volume.

(4) For a design analysis conducted to meet the requirements of § 63.1281(d)(1) or (e)(3)(ii), the owner or operator shall meet the requirements specified in paragraphs (d)(4)(i) and (d)(4)(ii) of this section. Documentation of the design analysis shall be submitted as a part of the Notification of Compliance Status Report as required in § 63.1285(d)(1)(i).

(i) The design analysis shall include analysis of the vent stream characteristics and control device operating parameters for the applicable control device as specified in paragraphs (d)(4)(i)(A) through (F) of this section.

(A) For a thermal vapor incinerator, the design analysis shall include the vent stream composition, constituent concentrations, and flowrate and shall establish the design minimum and average temperatures in the combustion zone and the combustion zone residence time.

(B) For a catalytic vapor incinerator, the design analysis shall include the vent stream composition, constituent concentrations, and flowrate and shall establish the design minimum and average temperatures across the catalyst bed inlet and outlet, and the design service life of the catalyst.

(C) For a boiler or process heater, the design analysis shall include the vent stream composition, constituent concentrations, and flowrate; shall establish the design minimum and average flame zone temperatures and combustion zone residence time; and shall describe the method and location where the vent stream is introduced into the flame zone.

(D) For a condenser, the design analysis shall include the vent stream composition, constituent concentrations, flowrate, relative humidity, and temperature, and shall establish the design outlet organic compound concentration level, design average temperature of the condenser exhaust vent stream, and the design average temperatures of the coolant fluid at the condenser inlet and outlet. As an alternative to the design analysis, an owner or operator may elect to use the procedures specified in paragraph (d)(5) of this section.

(E) For a regenerable carbon adsorption, the design analysis shall include

the vent stream composition, constituent concentrations, flowrate, relative humidity, and temperature, and shall establish the design exhaust vent stream organic compound concentration level, adsorption cycle time, number and capacity of carbon beds, type and working capacity of activated carbon used for the carbon beds, design total regeneration stream flow over the period of each complete carbon bed regeneration cycle, design carbon bed temperature after regeneration, design carbon bed regeneration time, and design service life of the carbon.

(F) For a nonregenerable carbon adsorption system, such as a carbon canister, the design analysis shall include the vent stream composition, constituent concentrations, flowrate, relative humidity, and temperature, and shall establish the design exhaust vent stream organic compound concentration level, capacity of the carbon bed, type and working capacity of activated carbon used for the carbon bed, and design carbon replacement interval based on the total carbon working capacity of the control device and source operating schedule. In addition, these systems will incorporate dual carbon canisters in case of emission breakthrough occurring in one canister.

(ii) If the owner or operator and the Administrator do not agree on a demonstration of control device performance using a design analysis, then the disagreement shall be resolved using the results of a performance test performed by the owner or operator in accordance with the requirements of paragraph (d)(3) of this section. The Administrator may choose to have an authorized representative observe the performance test.

(5) As an alternative to the procedures in paragraphs (d)(3) and (d)(4)(i)(D) of this section, an owner or operator may elect to use the procedures documented in the GRI report entitled, ''Atmospheric Rich/Lean Method for Determining Glycol Dehydrator Emissions,'' (GRI–95/0368.1) as inputs for the model GRI–GLYCalc™, Version 3.0 or higher, to determine condenser performance.

(e) *Compliance demonstration for control devices performance requirements.* This paragraph applies to the demonstration of compliance with the control device performance requirements specified in §63.1281(d)(1) and (e)(3)(ii). Compliance shall be demonstrated using the requirements in paragraphs (e)(1) through (3) of this section. As an alternative, an owner or operator that installs a condenser as the control device to achieve the requirements specified in §63.1281(d)(1)(ii) or (e)(3)(ii) may demonstrate compliance according to paragraph (f) of this section. An owner or operator may switch between compliance with paragraph (e) of this section and compliance with paragraph (f) of this section only after at least 1 year of operation in compliance with the selected approach. Notification of such a change in the compliance method shall be reported in the next Periodic Report, as required in §63.1285(e), following the change.

(1) The owner or operator shall establish a site specific maximum or minimum monitoring parameter value (as appropriate) according to the requirements of §63.1283(d)(5)(i).

(2) The owner or operator shall calculate the daily average of the applicable monitored parameter in accordance with §63.1283(d)(4).

(3) Compliance is achieved when the daily average of the monitoring parameter value calculated under paragraph (e)(2) of this section is either equal to or greater than the minimum or equal to or less than the maximum monitoring value established under paragraph (e)(1) of this section.

(f) *Compliance demonstration with percent reduction performance requirements—condensers.* This paragraph applies to the demonstration of compliance with the performance requirements specified in §63.1281(d)(1)(ii) for condensers. Compliance shall be demonstrated using the procedures in paragraphs (f)(1) through (f)(3) of this section.

(1) The owner or operator shall establish a site-specific condenser performance curve according to the procedures specified in §63.1283(d)(5)(ii).

(2) Compliance with the percent reduction requirement in §63.1281(d)(1)(ii) or (e)(3) shall be demonstrated by the procedures in paragraphs (f)(2)(i) through (iii) of this section.

(i) The owner or operator must calculate the daily average condenser outlet temperature in accordance with § 63.1283(d)(4).

(ii) The owner or operator shall determine the condenser efficiency for the current operating day using the daily average condenser outlet temperature calculated in paragraph (f)(2)(i) of this section and the condenser performance curve established in paragraph (f)(1) of this section.

(iii) Except as provided in paragraphs (f)(2)(iii)(A), (B), and (D) of this section, at the end of each operating day the owner or operator shall calculate the 30-day average HAP emission reduction from the condenser efficiencies as determined in paragraph (f)(2)(ii) of this section for the preceding 30 operating days. If the owner or operator uses a combination of process modifications and a condenser in accordance with the requirements of § 63.1281(e), the 30-day average HAP emission reduction shall be calculated using the emission reduction achieved through process modifications and the condenser efficiency as determined in paragraph (f)(2)(ii) of this section, both for the preceding 30 operating days.

(A) After the compliance date specified in § 63.1270(d), an owner or operator of a facility that stores natural gas that has less than 30 days of data for determining the average HAP emission reduction shall calculate the cumulative average at the end of the withdrawal season, each season, until 30 days of condenser operating data are accumulated. For a facility that does not store natural gas, the owner or operator that has less than 30 days of data for determining average HAP emission reduction shall calculate the cumulative average at the end of the calendar year, each year, until 30 days of condenser operating data are accumulated.

(B) After the compliance date specified in § 63.1270(d), for an owner or operator that has less than 30 days of data for determining the average HAP emission reduction, compliance is achieved if the average HAP emission reduction calculated in paragraph (f)(2)(iii)(A) of this section is equal to or greater than 95.0 percent.

(C) For the purposes of this subpart, a withdrawal season begins the first time gas is withdrawn from the storage field after July 1 of the calendar year and ends on June 30 of the next calendar year.

(D) Glycol dehydration units that are operated continuously have the option of complying with the requirements specified in 40 CFR 63.772(g).

(3) Compliance is achieved with the emission limitation specified in § 63.1281(d)(1)(ii) or (e)(3) if the average HAP emission reduction calculated in paragraph (f)(2)(iii) of this section is equal to or greater than 95.0 percent.

[64 FR 32648, June 17, 1999, as amended at 66 FR 34556, June 29, 2001]

§ 63.1283 Inspection and monitoring requirements.

(a) This section applies to an owner or operator using air emission controls in accordance with the requirements of § 63.1275.

(b) [Reserved]

(c) *Closed-vent system inspection and monitoring requirements.* (1) For each closed-vent system required to comply with this section, the owner or operator shall comply with the requirements of paragraphs (c)(2) through (7) of this section.

(2) Except as provided in paragraphs (c) (5) and (6) of this section, each closed-vent system shall be inspected according to the procedures and schedule specified in paragraphs (c)(2) (i) and (ii) of this section.

(i) For each closed-vent system joints, seams, or other connections that are permanently or semi-permanently sealed (e.g., a welded joint between two sections of hard piping or a bolted or gasketed ducting flange), the owner or operator shall:

(A) Conduct an initial inspection according to the procedures specified in § 63.1282(b) to demonstrate that the closed-vent system operates with no detectable emissions. Inspection results shall be submitted with the Notification of Compliance Status Report as specified in § 63.1285(d)(1) or (2).

(B) Conduct annual visual inspections for defects that could result in air emissions. Defects include, but are not limited to, visible cracks, holes, or gaps in piping; loose connections; or

broken or missing caps or other closure devices. The owner or operator shall monitor a component or connection using the procedures specified in §63.1282(b) to demonstrate that it operates with no detectable emissions following any time the component or connection is repaired or replaced or the connection is unsealed. Inspection results shall be submitted in the Periodic Report as specified in §63.1285(e)(2)(iii).

(ii) For closed-vent system components other than those specified in paragraph (c)(2)(i) of this section, the owner or operator shall:

(A) Conduct an initial inspection according to the procedures specified in §63.1282(b) to demonstrate that the closed-vent system operates with no detectable emissions. Inspection results shall be submitted with the Notification of Compliance Status Report as specified in §63.1285(d)(1) or (2).

(B) Conduct annual inspections according to the procedures specified in §63.1282(b) to demonstrate that the components or connections operate with no detectable emissions. Inspection results shall be submitted in the Periodic Report as specified in §63.1285(e)(2)(iii).

(C) Conduct annual visual inspections for defects that could result in air emissions. Defects include, but are not limited to, visible cracks, holes, or gaps in ductwork; loose connections; or broken or missing caps or other closure devices. Inspection results shall be submitted in the Periodic Report as specified in §63.1285(e)(2)(iii).

(3) In the event that a leak or defect is detected, the owner or operator shall repair the leak or defect as soon as practicable, except as provided in paragraph (c)(4) of this section.

(i) A first attempt at repair shall be made no later than 5 calendar days after the leak is detected.

(ii) Repair shall be completed no later than 15 calendar days after the leak is detected.

(4) Delay of repair of a closed-vent system for which leaks or defects have been detected is allowed if the repair is technically infeasible without a shutdown, as defined in §63.1271, or if the owner or operator determines that emissions resulting from immediate repair would be greater than the fugitive emissions likely to result from delay of repair. Repair of such equipment shall be completed by the end of the next shutdown.

(5) Any parts of the closed-vent system or cover that are designated, as described in paragraphs (c)(5) (i) and (ii) of this section, as unsafe to inspect are exempt from the inspection requirements of paragraphs (c)(2) (i) and (ii) of this section if:

(i) The owner or operator determines that the equipment is unsafe to inspect because inspecting personnel would be exposed to an imminent or potential danger as a consequence of complying with paragraph (c)(2) (i) or (ii) of this section; and

(ii) The owner or operator has a written plan that requires inspection of the equipment as frequently as practicable during safe-to-inspect times.

(6) Any parts of the closed-vent system or cover that are designated, as described in paragraphs (c)(6) (i) and (ii) of this section, as difficult to inspect are exempt from the inspection requirements of paragraphs (c)(2) (i) and (ii) of this section if:

(i) The owner or operator determines that the equipment cannot be inspected without elevating the inspecting personnel more than 2 meters above a support surface; and

(ii) The owner or operator has a written plan that requires inspection of the equipment at least once every 5 years.

(7) Records shall be maintained as specified in §63.1284(b)(5) through (8).

(d) *Control device monitoring requirements.* (1) For each control device except as provided for in paragraph (d)(2) of this section, the owner or operator shall install and operate a continuous parameter monitoring system in accordance with the requirements of paragraphs (d)(3) through (9) of this section that will allow a determination to be made whether the control device is achieving the applicable performance requirements of §63.1281(d) or (e)(3). Owners or operators that install and operate a flare in accordance with §63.1281(d)(1)(iii) are exempt from the requirements of paragraphs (d)(4) and (5) of this section. The continuous parameter monitoring system must meet the following specifications and requirements:

(i) Each continuous parameter monitoring system shall measure data values at least once every hour and record either:

(A) Each measured data value; or

(B) Each block average value for each 1-hour period or shorter periods calculated from all measured data values during each period. If values are measured more frequently than once per minute, a single value for each minute may be used to calculate the hourly (or shorter period) block average instead of all measured values.

(ii) The monitoring system must be installed, calibrated, operated, and maintained in accordance with the manufacturer's specifications or other written procedures that provide reasonable assurance that the monitoring equipment is operating properly.

(2) An owner or operator is exempted from the monitoring requirements specified in paragraphs (d)(3) through (9) of this section for the following types of control devices:

(i) A boiler or process heater in which all vent streams are introduced with the primary fuel or are used as the primary fuel;

(ii) A boiler or process heater with a design heat input capacity equal to or greater than 44 megawatts.

(3) The owner or operator shall install, calibrate, operate, and maintain a device equipped with a continuous recorder to measure the values of operating parameters appropriate for the control device as specified in either paragraph (d)(3)(i), (d)(3)(ii), or (d)(3)(iii) of this section.

(i) A continuous monitoring system that measures the following operating parameters as applicable:

(A) For a thermal vapor incinerator, a temperature monitoring device equipped with a continuous recorder. The monitoring device shall have a minimum accuracy of ±2 percent of the temperature being monitored in °C, or ±2.5 °C, whichever value is greater. The temperature sensor shall be installed at a location in the combustion chamber downstream of the combustion zone.

(B) For a catalytic vapor incinerator, a temperature monitoring device equipped with a continuous recorder. The device shall be capable of monitoring temperatures at two locations and have a minimum accuracy of ±2 percent of the temperatures being monitored in °C, or ±2.5 °C, whichever value is greater. One temperature sensor shall be installed in the vent stream at the nearest feasible point to the catalyst bed inlet and a second temperature sensor shall be installed in the vent stream at the nearest feasible point to the catalyst bed outlet.

(C) For a flare, a heat sensing monitoring device equipped with a continuous recorder that indicates the continuous ignition of the pilot flame.

(D) For a boiler or process heater with a design heat input capacity of less than 44 megawatts, a temperature monitoring device equipped with a continuous recorder. The temperature monitoring device shall have a minimum accuracy of ±2 percent of the temperature being monitored in °C, or ±2.5 °C, whichever value is greater. The temperature sensor shall be installed at a location in the combustion chamber downstream of the combustion zone.

(E) For a condenser, a temperature monitoring device equipped with a continuous recorder. The temperature monitoring device shall have a minimum accuracy of ±2 percent of the temperature being monitored in °C, or ±2.5 °C, whichever value is greater. The temperature sensor shall be installed at a location in the exhaust vent stream from the condenser.

(F) For a regenerative-type carbon adsorption system:

(*1*) A continuous parameter monitoring system to measure and record the average total regeneration stream mass flow or volumetric flow during each carbon bed regeneration cycle. The integrating regenerating stream flow monitoring device must have an accuracy of ±10 percent; and

(*2*) A continuous parameter monitoring system to measure and record the average carbon bed temperature for the duration of the carbon bed steaming cycle and to measure the actual carbon bed temperature after regeneration and within 15 minutes of completing the cooling cycle. The temperature monitoring device shall have a minimum accuracy of ±2 percent of the

temperature being monitored in °C, or ±2.5 °C, whichever value is greater.

(G) For a nonregenerative-type carbon adsorption system, the owner or operator shall monitor the design carbon replacement interval established using a performance test performed in accordance with §63.1282(d)(3) or a design analysis in accordance with §63.1282(d)(4)(i)(F) and shall be based on the total carbon working capacity of the control device and source operating schedule.

(ii) A continuous monitoring system that measures the concentration level of organic compounds in the exhaust vent stream from the control device using an organic monitoring device equipped with a continuous recorder. The monitor must meet the requirements of Performance Specification 8 or 9 of appendix B of 40 CFR part 60 and must be installed, calibrated, and maintained according to the manufacturer's specifications.

(iii) A continuous monitoring system that measures alternative operating parameters other than those specified in paragraph (d)(3)(i) or (d)(3)(ii) of this section upon approval of the Administrator as specified in §63.8(f)(1) through (5).

(4) Using the data recorded by the monitoring system, the owner or operator must calculate the daily average value for each monitored operating parameter for each operating day. If HAP emissions unit operation is continuous, the operating day is a 24-hour period. If the HAP emissions unit operation is not continuous, the operating day is the total number of hours of control device operation per 24-hour period. Valid data points must be available for 75 percent of the operating hours in an operating day to compute the daily average.

(5) For each operating parameter monitored in accordance with the requirements of paragraph (d)(3) of this section, the owner or operator shall comply with paragraph (d)(5)(i) of this section for all control devices, and when condensers are installed, the owner or operator shall also comply with paragraph (d)(5)(ii) of this section for condensers.

(i) The owner or operator shall establish a minimum operating parameter value or a maximum operating parameter value, as appropriate for the control device, to define the conditions at which the control device must be operated to continuously achieve the applicable performance requirements of §63.1281(d)(1) or (e)(3)(ii). Each minimum or maximum operating parameter value shall be established as follows:

(A) If the owner or operator conducts performance tests in accordance with the requirements of §63.1282(d)(3) to demonstrate that the control device achieves the applicable performance requirements specified in §63.1281(d)(1) or (e)(3)(ii), then the minimum operating parameter value or the maximum operating parameter value shall be established based on values measured during the performance test and supplemented, as necessary, by control device design analysis or control device manufacturer's recommendations or a combination of both.

(B) If the owner or operator uses a control device design analysis in accordance with the requirements of §63.1282(d)(4) to demonstrate that the control device achieves the applicable performance requirements specified in §63.1281(d)(1) or (e)(3)(ii), then the minimum operating parameter value or the maximum operating parameter value shall be established based on the control device design analysis and may be supplemented by the control device manufacturer's recommendations.

(ii) The owner or operator shall establish a condenser performance curve showing the relationship between condenser outlet temperature and condenser control efficiency. The curve shall be established as follows:

(A) If the owner or operator conducts a performance test in accordance with the requirements of §63.1282(d)(3) to demonstrate that the condenser achieves the applicable performance requirements in §63.1281(d)(1) or (e)(3)(ii), then the condenser performance curve shall be based on values measured during the performance test and supplemented as necessary by control device design analysis, or control device manufacturer's recommendations, or a combination or both.

(B) If the owner or operator uses a control device design analysis in accordance with the requirements of § 63.1282(d)(4)(i)(D) to demonstrate that the condenser achieves the applicable performance requirements specified in § 63.1281(d)(1) or (e)(3)(ii), then the condenser performance curve shall be based on the condenser design analysis and may be supplemented by the control device manufacturer's recommendations.

(C) As an alternative to paragraphs (d)(5)(ii)(A) and (B) of this section, the owner or operator may elect to use the procedures documented in the GRI report entitled, ''Atmospheric Rich/Lean Method for Determining Glycol Dehydrator Emissions'' (GRI–95/0368.1) as inputs for the model GRI–GLYCalc™, Version 3.0 or higher, to generate a condenser performance curve.

(6) An excursion for a given control device is determined to have occurred when the monitoring data or lack of monitoring data result in any one of the criteria specified in paragraphs (d)(6)(i) through (d)(6)(iv) of this section being met. When multiple operating parameters are monitored for the same control device and during the same operating day, and more than one of these operating parameters meets an excursion criterion specified in paragraphs (d)(6)(i) through (d)(6)(iv) of this section, then a single excursion is determined to have occurred for the control device for that operating day.

(i) An excursion occurs when the daily average value of a monitored operating parameter is less than the minimum operating parameter limit (or, if applicable, greater than the maximum operating parameter limit) established for the operating parameter in accordance with the requirements of paragraph (d)(5)(i) of this section.

(ii) An excursion occurs when average condenser efficiency calculated according to the requirements specified in § 63.1282(f)(2)(iii) is less than 95.0 percent, as specified in § 63.1282(f)(3).

(iii) An excursion occurs when the monitoring data are not available for at least 75 percent of the operating hours in a day.

(iv) If the closed-vent system contains one or more bypass devices that could be used to divert all or a portion of the gases, vapors, or fumes from entering the control device, an excursion occurs when:

(A) For each bypass line subject to § 63.1281(c)(3)(i)(A) the flow indicator indicates that flow has been detected and that the stream has been diverted away from the control device to the atmosphere.

(B) For each bypass line subject to § 63.1281(c)(3)(i)(B), if the seal or closure mechanism has been broken, the bypass line valve position has changed, the key for the lock-and-key type lock has been checked out, or the car-seal has broken.

(7) For each excursion, except as provided for in paragraph (d)(8) of this section, the owner or operator shall be deemed to have failed to have applied control in a manner that achieves the required operating parameter limits. Failure to achieve the required operating parameter limits is a violation of this standard.

(8) An excursion is not a violation of the operating parameter limit as specified in paragraphs (d)(8)(i) and (d)(8)(ii) of this section.

(i) An excursion does not count toward the number of excused excursions allowed under paragraph (d)(8)(ii) of this section when the excursion occurs during any one of the following periods:

(A) During a period of startup, shutdown, or malfunction when the affected facility is operated during such period in accordance with the facility's startup, shutdown, and malfunction plan; or

(B) During periods of non-operation of the unit or the process that is vented to the control device (resulting in cessation of HAP emissions to which the monitoring applies).

(ii) For each control device, or combinations of control devices, installed on the same HAP emissions unit, one excused excursion is allowed per semiannual period for any reason. The initial semiannual period is the 6-month reporting period addressed by the first Periodic Report submitted by the owner or operator in accordance with § 63.1285(e) of this subpart.

(9) Nothing in paragraphs (d)(1) through (d)(8) of this section shall be construed to allow or excuse a monitoring parameter excursion caused by

any activity that violates other applicable provisions of this subpart.

[64 FR 32648, June 17, 1999, as amended at 66 FR 34557, June 29, 2001]

§ 63.1284 Recordkeeping requirements.

(a) The recordkeeping provisions of subpart A of this part, that apply and those that do not apply to owners and operators of facilities subject to this subpart are listed in Table 2 of this subpart.

(b) Except as specified in paragraphs (c) and (d) of this section, each owner or operator of a facility subject to this subpart shall maintain the records specified in paragraphs (b)(1) through (b)(10) of this section:

(1) The owner or operator of an affected source subject to the provisions of this subpart shall maintain files of all information (including all reports and notifications) required by this subpart. The files shall be retained for at least 5 years following the date of each occurrence, measurement, maintenance, corrective action, report or period.

(i) All applicable records shall be maintained in such a manner that they can be readily accessed.

(ii) The most recent 12 months of records shall be retained on site or shall be accessible from a central location by computer or other means that provides access within 2 hours after a request.

(iii) The remaining 4 years of records may be retained offsite.

(iv) Records may be maintained in hard copy or computer-readable form including, but not limited to, on paper, microfilm, computer, floppy disk, magnetic tape, or microfiche.

(2) Records specified in § 63.10(b)(2);

(3) Records specified in § 63.10(c) for each monitoring system operated by the owner or operator in accordance with the requirements of § 63.1283(d). Notwithstanding the previous sentence, monitoring data recorded during periods identified in paragraphs (b)(3)(i) through (iv) of this section shall not be included in any average or percent leak rate computed under this subpart. Records shall be kept of the times and durations of all such periods and any other periods during process or control device operation when monitors are not operating.

(i) Monitoring system breakdowns, repairs, calibration checks, and zero (low-level) and high-level adjustments;

(ii) Startup, shutdown, and malfunction events. During startup, shutdown and malfunction events, the owner or operator shall maintain records indicating whether or not the startup, shutdown, or malfunction plan, required under § 63.1272(d), was followed.

(iii) Periods of non-operation resulting in cessation of the emissions to which the monitoring applies; and

(iv) Excursions due to invalid data as defined in § 63.1283(d)(6)(iii).

(4) Each owner or operator using a control device to comply with § 63.1274 shall keep the following records up-to-date and readily accessible:

(i) Continuous records of the equipment operating parameters specified to be monitored under § 63.1283(d) or specified by the Administrator in accordance with § 63.1283(d)(3)(iii). For flares, the hourly records and records of pilot flame outages specified in paragraph (e) of this section shall be maintained in place of continuous records.

(ii) Records of the daily average value of each continuously monitored parameter for each operating day determined according to the procedures specified in § 63.1283(d)(4). For flares, the records required in paragraph (e) of this section.

(iii) Hourly records of whether the flow indicator specified under § 63.1281(c)(3)(i)(A) was operating and whether flow was detected at any time during the hour, as well as records of the times and durations of all periods when the vent stream is diverted from the control device or the monitor is not operating.

(iv) Where a seal or closure mechanism is used to comply with § 63.1281(c)(3)(i)(B), hourly records of flow are not required. In such cases, the owner or operator shall record that the monthly visual inspection of the seals or closure mechanism has been done, and shall record the duration of all periods when the seal mechanism is broken, the bypass line valve position has changed, or the key for a lock-and-key type lock has been checked out,

and records of any car-seal that has broken.

(5) Records identifying all parts of the closed-vent system that are designated as unsafe to inspect in accordance with § 63.1283(c)(5), an explanation of why the equipment is unsafe to inspect, and the plan for inspecting the equipment.

(6) Records identifying all parts of the closed-vent system that are designated as difficult to inspect in accordance with § 63.1283(c)(6), an explanation of why the equipment is difficult to inspect, and the plan for inspecting the equipment.

(7) For each inspection conducted in accordance with § 63.1283(c), during which a leak or defect is detected, a record of the information specified in paragraphs (b)(7)(i) through (b)(7)(viii) of this section.

(i) The instrument identification numbers, operator name or initials, and identification of the equipment.

(ii) The date the leak or defect was detected and the date of the first attempt to repair the leak or defect.

(iii) Maximum instrument reading measured by the method specified in § 63.1282(b) after the leak or defect is successfully repaired or determined to be nonrepairable.

(iv) ''Repair delayed'' and the reason for the delay if a leak or defect is not repaired within 15 calendar days after discovery of the leak or defect.

(v) The name, initials, or other form of identification of the owner or operator (or designee) whose decision it was that repair could not be effected without a shutdown.

(vi) The expected date of successful repair of the leak or defect if a leak or defect is not repaired within 15 calendar days.

(vii) Dates of shutdowns that occur while the equipment is unrepaired.

(viii) The date of successful repair of the leak or defect.

(8) For each inspection conducted in accordance with § 63.1283(c) during which no leaks or defects are detected, a record that the inspection was performed, the date of the inspection, and a statement that no leaks or defects were detected.

(9) Records of glycol dehydration unit baseline operations calculated as required under § 63.1281(e)(1).

(10) Records required in § 63.1281(e)(3)(i) documenting that the facility continues to operate under the conditions specified in § 63.1281(e)(2).

(c) An owner or operator that elects to comply with the benzene emission limit specified in § 63.1275(b)(1)(ii) shall document, to the Administrator's satisfaction, the following items:

(1) The method used for achieving compliance and the basis for using this compliance method; and

(2) The method used for demonstrating compliance with 0.90 megagrams per year of benzene.

(3) Any information necessary to demonstrate compliance as required in the methods specified in paragraphs (c)(1) and (c)(2) of this section.

(d) An owner or operator that is exempt from control requirements under § 63.1274(d) shall maintain the records specified in paragraph (d)(1) or (d)(2) of this section, as appropriate, for each glycol dehydration unit that is not controlled according to the requirements of § 63.1274(c).

(1) The actual annual average natural gas throughput (in terms of natural gas flowrate to the glycol dehydration unit per day), as determined in accordance with § 63.1282(a)(1); or

(2) The actual average benzene emissions (in terms of benzene emissions per year), as determined in accordance with § 63.1282(a)(2).

(e) Record the following when using a flare to comply with § 63.1281(d):

(1) Flare design (i.e., steam-assisted, air-assisted, or non-assisted);

(2) All visible emission readings, heat content determinations, flowrate measurements, and exit velocity determinations made during the compliance determination required by § 63.1282(d)(2); and

(3) All hourly records and other recorded periods when the pilot flame is absent.

[64 FR 32648, June 17, 1999, as amended at 66 FR 34558, June 29, 2001]

§ 63.1285 Reporting requirements.

(a) The reporting provisions of subpart A, of this part that apply and those that do not apply to owners and

operators of facilities subject to this subpart are listed in Table 2 of this subpart.

(b) Each owner or operator of a facility subject to this subpart shall submit the information listed in paragraphs (b)(1) through (b)(6) of this section, except as provided in paragraph (b)(7) of this section.

(1) The initial notifications required for existing affected sources under §63.9(b)(2) shall be submitted by 1 year after an affected source becomes subject to the provisions of this subpart or by June 17, 2000, whichever is later. Affected sources that are major sources on or before June 17, 2000 and plan to be area sources by June 17, 2002 shall include in this notification a brief, nonbinding description of a schedule for the action(s) that are planned to achieve area source status.

(2) The date of the performance evaluation as specified in §63.8(e)(2), required only if the owner or operator is requested by the Administrator to conduct a performance evaluation for a continuous monitoring system. A separate notification of the performance evaluation is not required if it is included in the initial notification submitted in accordance with paragraph (b)(1) of this section.

(3) The planned date of a performance test at least 60 days before the test in accordance with §63.7(b). Unless requested by the Administrator, a site-specific test plan is not required by this subpart. If requested by the Administrator, the owner or operator must also submit the site-specific test plan required by §63.7(c) with the notification of the performance test. A separate notification of the performance test is not required if it is included in the initial notification submitted in accordance with paragraph (b)(1) of this section.

(4) A Notification of Compliance Status Report as described in paragraph (d) of this section;

(5) Periodic Reports as described in paragraph (e) of this section; and

(6) Startup, shutdown, and malfunction reports, as specified in §63.10(d)(5), shall be submitted as required. Separate startup, shutdown, or malfunction reports as described in §63.10(d)(5)(i) are not required if the information is included in the Periodic Report specified in paragraph (e) of this section.

(7) Each owner or operator of a glycol dehydration unit subject to this subpart that is exempt from the control requirements for glycol dehydration unit process vents in §63.1275, is exempt from all reporting requirements for major sources in this subpart for that unit.

(c) [Reserved]

(d) Each owner or operator of a source subject to this subpart shall submit a Notification of Compliance Status Report as required under §63.9(h) within 180 days after the compliance date specified in §63.1270(d). In addition to the information required under §63.9(h), the Notification of Compliance Status Report shall include the information specified in paragraphs (d)(1) through (10) of this section. This information may be submitted in an operating permit application, in an amendment to an operating permit application, in a separate submittal, or in any combination of the three. If all of the information required under this paragraph have been submitted at any time prior to 180 days after the applicable compliance dates specified in §63.1270(d), a separate Notification of Compliance Status Report is not required. If an owner or operator submits the information specified in paragraphs (d)(1) through (10) of this section at different times, and/or different submittals, subsequent submittals may refer to previous submittals instead of duplicating and resubmitting the previously submitted information.

(1) If a closed-vent system and a control device other than a flare are used to comply with §63.1274, the owner or operator shall submit:

(i) The design analysis documentation specified in §63.1282(d)(4) of this subpart if the owner or operator elects to prepare a design analysis; or

(ii) If the owner or operator elects to conduct a performance test, the performance test results including the information specified in paragraphs (d)(1)(ii)(A) and (B) of this section. Results of a performance test conducted prior to the compliance date of this subpart can be used provided that the test was conducted using the methods specified in §63.1282(d)(3), and that the

test conditions are representative of current operating conditions.

(A) The percent reduction of HAP or TOC, or the outlet concentration of HAP or TOC (parts per million by volume on a dry basis), determined as specified in § 63.1282(d)(3) of this subpart; and

(B) The value of the monitored parameters specified in § 63.1283(d) of this subpart, or a site-specific parameter approved by the permitting agency, averaged over the full period of the performance test.

(iii) The results of the closed-vent system initial inspections performed according to the requirements in § 63.1283(c)(2)(i) and (ii).

(2) If a closed-vent system and a flare are used to comply with § 63.1274, the owner or operator shall submit performance test results including the information in paragraphs (d)(2)(i) and (ii) of this section.

(i) All visible emission readings, heat content determinations, flowrate measurements, and exit velocity determinations made during the compliance determination required by § 63.1282(d)(2) of this subpart, and

(ii) A statement of whether a flame was present at the pilot light over the full period of the compliance determination.

(iii) The results of the closed-vent system initial inspections performed according to the requirements in § 63.1283(c)(2)(i) and (ii).

(3) The owner or operator shall submit one complete test report for each test method used for a particular source.

(i) For additional tests performed using the same test method, the results specified in paragraph (d)(1)(ii) of this section shall be submitted, but a complete test report is not required.

(ii) A complete test report shall include a sampling site description, description of sampling and analysis procedures and any modifications to standard procedures, quality assurance procedures, record of operating conditions during the test, record of preparation of standards, record of calibrations, raw data sheets for field sampling, raw data sheets for field and laboratory analyses, documentation of calculations, and any other information required by the test method.

(4) For each control device other than a flare used to meet the requirements of § 63.1274, the owner or operator shall submit the information specified in paragraphs (d)(4)(i) through (iii) of this section for each operating parameter required to be monitored in accordance with the requirements of § 63.1283(d).

(i) The minimum operating parameter value or maximum operating parameter value, as appropriate for the control device, established by the owner or operator to define the conditions at which the control device must be operated to continuously achieve the applicable performance requirements of § 63.1281(d)(1) or (e)(3)(ii).

(ii) An explanation of the rationale for why the owner or operator selected each of the operating parameter values established in § 63.1283(d)(5) of this subpart. This explanation shall include any data and calculations used to develop the value, and a description of why the chosen value indicates that the control device is operating in accordance with the applicable requirements of § 63.1281(d)(1) or (e)(3)(ii).

(iii) A definition of the source's operating day for purposes of determining daily average values of monitored parameters. The definition shall specify the times at which an operating day begins and ends.

(5) Results of any continuous monitoring system performance evaluations shall be included in the Notification of Compliance Status Report.

(6) After a title V permit has been issued to the owner or operator of an affected source, the owner or operator of such source shall comply with all requirements for compliance status reports contained in the source's title V permit, including reports required under this subpart. After a title V permit has been issued to the owner or operator of an affected source, and each time a notification of compliance status is required under this subpart, the owner or operator of such source shall submit the notification of compliance status to the appropriate permitting authority following completion of the relevant compliance demonstration activity specified in this subpart.

(7) The owner or operator that elects to comply with the requirements of §63.1275(b)(1)(ii) shall submit the records required under §63.1284(c).

(8) The owner or operator shall submit an analysis demonstrating whether an affected source is a major source using the maximum throughput calculated according to §63.1270(a).

(9) The owner or operator shall submit a statement as to whether the source has complied with the requirements of this subpart.

(10) The owner or operator shall submit the analysis prepared under §63.1281(e)(2) to demonstrate that the conditions by which the facility will be operated to achieve an overall HAP emission reduction of 95.0 percent through process modifications or a combination of process modifications and one or more control devices.

(e) *Periodic Reports.* An owner or operator shall prepare Periodic Reports in accordance with paragraphs (e)(1) and (2) of this section and submit them to the Administrator.

(1) An owner or operator shall submit Periodic Reports semiannually beginning 60 calendar days after the end of the applicable reporting period. The first report shall be submitted no later than 240 days after the date the Notification of Compliance Status Report is due and shall cover the 6-month period beginning on the date the Notification of Compliance Status Report is due.

(2) The owner or operator shall include the information specified in paragraphs (e)(2)(i) through (ix) of this section, as applicable.

(i) The information required under §63.10(e)(3). For the purposes of this subpart and the information required under §63.10(e)(3), excursions (as defined in §63.1283(d)(6)) shall be considered excess emissions.

(ii) A description of all excursions as defined in §63.1283(d)(6) of this subpart that have occurred during the 6-month reporting period.

(A) For each excursion caused when the daily average value of a monitored operating parameter is less than the minimum operating parameter limit (or, if applicable, greater than the maximum operating parameter limit), as specified in §63.1283(d)(6)(i), the report must include the daily average values of the monitored parameter, the applicable operating parameter limit, and the date and duration of the period that the excursion occurred.

(B) For each excursion caused when the 30-day average condenser control efficiency is less than 95.0 percent, as specified in §63.1283(d)(6)(ii), the report must include the 30-day average values of the condenser control efficiency, and the date and duration of the period that the excursion occurred.

(C) For each excursion caused by lack of monitoring data, as specified in §63.1283(d)(6)(iii), the report must include the date and duration of period when the monitoring data were not collected and the reason why the data were not collected.

(iii) For each inspection conducted in accordance with §63.1283(c) during which a leak or defect is detected, the records specified in §63.1284(b)(7) must be included in the next Periodic Report.

(iv) For each closed-vent system with a bypass line subject to §63.1281(c)(3)(i)(A), records required under §63.1284(b)(4)(iii) of all periods when the vent stream is diverted from the control device through a bypass line. For each closed-vent system with a bypass line subject to §63.1281(c)(3)(i)(B), records required under §63.1284(b)(4)(iv) of all periods in which the seal or closure mechanism is broken, the bypass valve position has changed, or the key to unlock the bypass line valve was checked out.

(v) If an owner or operator elects to comply with §63.1275(b)(1)(ii), the records required under §63.1284(c)(3).

(vi) The information in paragraphs (e)(2)(vi)(A) and (B) of this section shall be stated in the Periodic Report, when applicable.

(A) No excursions.

(B) No continuous monitoring system has been inoperative, out of control, repaired, or adjusted.

(vii) Any change in compliance methods as specified in §63.1282(e).

(viii) If the owner or operator elects to comply with §63.1275(c)(2), the records required under §63.1284(b)(10).

(ix) For flares, the records specified in §63.1284(e).

(f) *Notification of process change.* Whenever a process change is made, or

a change in any of the information submitted in the Notification of Compliance Status Report, the owner or operator shall submit a report within 180 days after the process change is made or as a part of the next Periodic Report as required under paragraph (e) of this section, whichever is sooner. The report shall include:

(1) A brief description of the process change;

(2) A description of any modification to standard procedures or quality assurance procedures;

(3) Revisions to any of the information reported in the original Notification of Compliance Status Report under paragraph (d) of this section; and

(4) Information required by the Notification of Compliance Status Report under paragraph (d) of this section for changes involving the addition of processes or equipment.

[64 FR 32648, June 17, 1999, as amended at 66 FR 34558, June 29, 2001]

§ 63.1286 Delegation of authority.

(a) In delegating implementation and enforcement authority to a State under section 112(l) of the Act, the authorities contained in paragraph (b) of this section shall be retained by the Administrator and not transferred to a State.

(b) Authorities will not be delegated to States for §§ 63.1282 and 63.1287 of this subpart.

§ 63.1287 Alternative means of emission limitation.

(a) If, in the judgment of the Administrator, an alternative means of emission limitation will achieve a reduction in HAP emissions at least equivalent to the reduction in HAP emissions from that source achieved under the applicable requirements in §§ 63.1274 through 63.1281, the Administrator will publish a notice in the FEDERAL REGISTER permitting the use of the alternative means for purposes of compliance with that requirement. The notice may condition the permission on requirements related to the operation and maintenance of the alternative means.

(b) Any notice under paragraph (a) of this section shall be published only after public notice and an opportunity for a hearing.

(c) Any person seeking permission to use an alternative means of compliance under this section shall collect, verify, and submit to the Administrator information showing that this means achieves equivalent emission reductions.

§§ 63.1288–63.1289 [Reserved]

APPENDIX TO SUBPART HHH OF PART 63—TABLES

TABLE 1.—LIST OF HAZARDOUS AIR POLLUTANTS (HAP) FOR SUBPART HHH

CAS Number [a]	Chemical name
75070	Acetaldehyde
71432	Benzene (includes benzene in gasoline)
75150	Carbon disulfide
463581	Carbonyl sulfide
100414	Ethyl benzene
107211	Ethylene glycol
75050	Acetaldehyde
50000	Formaldehyde
110543	n-Hexane
91203	Naphthalene
108883	Toluene
540841	2,2,4-Trimethylpentane
1330207	Xylenes (isomers and mixture)
95476	o-Xylene
108383	m-Xylene
106423	p-Xylene

[a] CAS numbers refer to the Chemical Abstracts Services registry number assigned to specific compounds, isomers, or mixtures of compounds.

TABLE 2 TO SUBPART HHH OF PART 63—APPLICABILITY OF 40 CFR PART 63 GENERAL PROVISIONS TO SUBPART HHH

General provisions reference	Applicable to subpart HHH	Explanation
§ 63.1(a)(1)	Yes	
§ 63.1(a)(2)	Yes	
§ 63.1(a)(3)	Yes	
§ 63.1(a)(4)	Yes	
§ 63.1(a)(5)	No	Section reserved.
§ 63.1(a)(6) through (a)(8)	Yes	
§ 63.1(a)(9)	No	Section reserved.
§ 63.1(a)(10)	Yes	
§ 63.1(a)(11)	Yes	

General provisions reference	Applicable to subpart HHH	Explanation
§ 63.1(a)(12) through (a)(14)	Yes	
§ 63.1(b)(1)	No	Subpart HHH specifies applicability.
§ 63.1(b)(2)	Yes	
§ 63.1(b)(3)	No.	
§ 63.1(c)(1)	No	Subpart HHH specifies applicability.
§ 63.1(c)(2)	No	
§ 63.1(c)(3)	No	Section reserved.
§ 63.1(c)(4)	Yes	
§ 63.1(c)(5)	Yes	
§ 63.1(d)	No	Section reserved.
§ 63.1(e)	Yes	
§ 63.2	Yes	Except definition of major source is unique for this source category and there are additional definitions in subpart HHH.
§ 63.3(a) through (c)	Yes	
§ 63.4(a)(1) through (a)(3)	Yes	
§ 63.4(a)(4)	No	Section reserved.
§ 63.4(a)(5)	Yes	
§ 63.4(b)	Yes	
§ 63.4(c)	Yes	
§ 63.5(a)(1)	Yes	
§ 63.5(a)(2)	No	Preconstruction review required only for major sources that commence construction after promulgation of the standard.
§ 63.5(b)(1)	Yes	
§ 63.5(b)(2)	No	Section reserved.
§ 63.5(b)(3)	Yes	
§ 63.5(b)(4)	Yes	
§ 63.5(b)(5)	Yes	
§ 63.5(b)(6)	Yes	
§ 63.5(c)	No	Section reserved.
§ 63.5(d)(1)	Yes	
§ 63.5(d)(2)	Yes	
§ 63.5(d)(3)	Yes	
§ 63.5(d)(4)	Yes	
§ 63.5(e)	Yes	
§ 63.5(f)(1)	Yes	
§ 63.5(f)(2)	Yes	
§ 63.6(a)	Yes	
§ 63.6(b)(1)	Yes	
§ 63.6(b)(2)	Yes	
§ 63.6(b)(3)	Yes	
§ 63.6(b)(4)	Yes	
§ 63.6(b)(5)	Yes	
§ 63.6(b)(6)	No	Section reserved.
§ 63.6(b)(7)	Yes	
§ 63.6(c)(1)	Yes	
§ 63.6(c)(2)	Yes	
§ 63.6(c)(3) and (c)(4)	No	Section reserved.
§ 63.6(c)(5)	Yes	
§ 63.6(d)	No	Section reserved.
§ 63.6(e)	Yes	
§ 63.6(e)	Yes	Except as otherwise specified.
§ 63.6(e)(1)(i)	No	Addressed in § 63.1272.
§ 63.6(e)(1)(ii)	Yes	
§ 63.6(e)(1)(iii)	Yes	
§ 63.6(e)(2)	Yes	
§ 63.6(e)(3)(i)	Yes	Except as otherwise specified.
§ 63.6(e)(3)(i)(A)	No	Addressed by § 63.1272(c).
§ 63.6(e)(3)(i)(B)	Yes	
§ 63.6(e)(3)(i)(C)	Yes	
§ 63.6(e)(3)(ii) through (3)(vi)	Yes	
§ 63.6(e)(3)(vii).		
§ 63.6(e)(3)(vii) (A)	Yes	
§ 63.6(e)(3)(vii) (B)	Yes	Except that the plan must provide for operation in compliance with § 63.1272(c).
§ 63.6(e)(3)(vii) (C)	Yes	
§ 63.6(e)3)(viii)	Yes	
§ 63.6(f)(1)	Yes	
§ 63.6(f)(2)	Yes	
§ 63.6(f)(3)	Yes	
§ 63.6(g)	Yes	
§ 63.6(h)	No	Subpart HHH does not contain opacity or visible emission standards.

General provisions reference	Applicable to subpart HHH	Explanation
§ 63.6(i)(1)–(i)(14)	Yes	
§ 63.6(i)(15)	No	Section reserved.
§ 63.6(i)(16)	Yes	
§ 63.6(j)	Yes	
§ 63.7(a)(1)	Yes	
§ 63.7(a)(2)	Yes	But the performance test results must be submitted within 180 days after the compliance date.
§ 63.7(a)(3)	Yes	
§ 63.7(b)	Yes	
§ 63.7(c)	Yes	
§ 63.7(d)	Yes	
§ 63.7(e)(1)	Yes	
§ 63.7(e)(2)	Yes	
§ 63.7(e)(3)	Yes	
§ 63.7(e)(4)	Yes	
§ 63.7(f)	Yes	
§ 63.7(g)	Yes	
§ 63.7(h)	Yes	
§ 63.8(a)(1)	Yes	
§ 63.8(a)(2)	Yes	
§ 63.8(a)(3)	No	Section reserved.
§ 63.8(a)(4)	Yes	
§ 63.8(b)(1)	Yes	
§ 63.8(b)(2)	Yes	
§ 63.8(b)(3)	Yes	
§ 63.8(c)(1)	Yes	
§ 63.8(c)(2)	Yes	
§ 63.8(c)(3)	Yes	
§ 63.8(c)(4)	No.	
§ 63.8(c)(5) through (c)(8)	Yes	
§ 63.8(d)	Yes	
§ 63.8(e)	Yes	Subpart HHH does not specifically require continuous emissions monitor performance evaluations, however, the Administrator can request that one be conducted.
§ 63.8(f)(1) through (f)(5)	Yes	
§ 63.8(f)(6)	No	Subpart HHH does not require continuous emissions monitoring.
§ 63.8(g)	No	Subpart HHH specifies continuous monitoring system data reduction requirements.
§ 63.9(a)	Yes	
§ 63.9(b)(1)	Yes	
§ 63.9(b)(2)	Yes	Existing sources are given 1 year (rather than 120 days) to submit this notification.
§ 63.9(b)(3)	Yes	
§ 63.9(b)(4)	Yes	
§ 63.9(b)(5)	Yes	
§ 63.9(c)	Yes	
§ 63.9(d)	Yes	
§ 63.9(e)	Yes	
§ 63.9(f)	No.	
§ 63.9(g)	Yes	
§ 63.9(h)(1) through (h)(3)	Yes	
§ 63.9(h)(4)	No	Section reserved.
§ 63.9(h)(5) and (h)(6)	Yes	
§ 63.9(i)	Yes	
§ 63.9(j)	Yes	
§ 63.10(a)	Yes	
§ 63.10(b)(1)	Yes	Section 63.1284(b)(1) requires sources to maintain the most recent 12 months of data on site and allows offsite storage for the remaining 4 years of data.
§ 63.10(b)(2)	Yes	
§ 63.10(b)(3)	No	
§ 63.10(c)(1)	Yes	
§ 63.10(c)(2) through (c)(4)	No	Sections reserved.
§ 63.10(c)(5) through (c)(8)	Yes	
§ 63.10(c)(9)	No	Section reserved.
§ 63.10(c)(10) through (c)(15)	Yes	
§ 63.10(d)(1)	Yes	
§ 63.10(d)(2)	Yes	
§ 63.10(d)(3)	Yes	

General provisions reference	Applicable to subpart HHH	Explanation
§63.10(d)(4)	Yes	
§63.10(d)(5)	Yes	Subpart HHH requires major sources to submit a startup, shutdown and malfunction report semi-annually.
§63.10(e)(1)	Yes	
§63.10(e)(2)	Yes	
§63.10(e)(3)(i)	Yes	Subpart HHH requires major sources to submit Periodic Reports semi-annually.
§63.10(e)(3)(i)(A)	Yes	
§63.10(e)(3)(i)(B)	Yes	
§63.10(e)(3)(i)(C)	No	Subpart HHH does not require quarterly reporting for excess emissions.
§63.10(e)(3)(ii) through (e)(3)(viii)	Yes	
§63.10(f)	Yes	
§63.11(a) and (b)	Yes	
§63.12(a) through (c)	Yes	
§63.13(a) through (c)	Yes	
§63.14(a) and (b)	Yes	
§63.15(a) and (b)	Yes	

[64 FR 32648, June 17, 1999, as amended at 66 FR 34558, June 29, 2001]

Subpart III—National Emission Standards for Hazardous Air Pollutants for Flexible Polyurethane Foam Production

SOURCE: 63 FR 53996, Oct. 7, 1998, unless otherwise noted.

§63.1290 Applicability.

(a) The provisions of this subpart apply to each new and existing flexible polyurethane foam or rebond foam process that meets the criteria listed in paragraphs (a)(1) through (3) of this section.

(1) Produces flexible polyurethane or rebond foam;

(2) Emits a HAP, except as provided in paragraph (c)(2) of this section; and

(3) Is located at a plant site that is a major source, as defined in §63.2 of subpart A.

(b) For the purpose of this subpart, an affected source includes all processes meeting the criteria in paragraphs (a)(1) through (a)(3) of this section that are located at a contiguous plant site, with the exception of those processes listed in paragraph (c) of this section.

(c) A process meeting one of the following criteria listed in paragraphs (c)(1) through (3) of this section shall not be subject to the provisions of this subpart:

(1) A process exclusively dedicated to the fabrication of flexible polyurethane foam;

(2) A research and development process; or

(3) A slabstock flexible polyurethane foam process at a plant site where the total amount of HAP, excluding diisocyanate reactants, used for slabstock foam production and foam fabrication is less than or equal to five tons per year, provided that slabstock foam production and foam fabrication processes are the only processes at the plant site that emit HAP. The amount of non-diisocyanate HAP used, $HAP_{used,}$ shall be calculated using Equation 1. Owners or operators of slabstock foam processes exempt from the regulation in accordance with this paragraph shall maintain records to verify that total non-diisocyanate HAP use at the plant site is less than 5 tons per year (4.5 megagrams per year).

$$HAP_{used} = \left[\sum_{i=1}^{m} (VOL_{ABA,\,i})(D_{ABA,\,i}) + \sum_{j=1}^{n} (VOL_{clean,\,j})(D_{clean,\,j})(WT_{HAPclean,\,j}) + \sum_{k=1}^{o} (VOL_{adh,\,k})(D_{adh,\,k})(WT_{HAPadh,\,k}) \right] \div 2000$$

(Equation 1)

Where,

HAP_{used} = amount of HAP, excluding diisocyanate reactants, used at the plant site for slabstock foam production and foam fabrication, tons per year

$VOL_{ABA,i}$ = volume of HAP ABA i used at the facility, gallons per year

$D_{ABA,i}$ = density of HAP ABA i, pounds per gallon

m = number of HAP ABAs used

$VOL_{clean,j}$ = volume of HAP used as an equipment cleaner, gallons per year

$D_{clean,j}$ = density of HAP equipment cleaner j, pounds per gallon

$WT_{HAPclean,k}$ = HAP content of equipment cleaner j, weight percent

n = number of HAP equipment cleaners used

$VOL_{adh,k}$ = volume of adhesive k, gallons per year

$D_{adh,k}$ = density of adhesive k, pounds per gallon

$WT_{HAPadh,k}$ = HAP content of adhesive k, weight percent

o = number of adhesives used

§ 63.1291 Compliance schedule.

(a) Existing affected sources shall be in compliance with all provisions of this subpart no later than October 8, 2001.

(b) New or reconstructed affected sources shall be in compliance with all provisions of this subpart upon initial startup.

§ 63.1292 Definitions.

All terms used in this subpart shall have the meaning given them in the Act, in subpart A of this part, and in this section. If a term is defined in subpart A and in this section, it shall have the meaning given in this section for purposes of this subpart.

Auxiliary blowing agent, or ABA, means a low-boiling point liquid added to assist foaming by generating gas beyond that resulting from the isocyanate-water reaction.

Breakthrough means that point in the adsorption step when the mass transfer zone (i.e., the section of the carbon bed where the HAP is removed from the carrier gas stream) first reaches the carbon bed outlet as the mass transfer zone moves down the bed in the direction of flow. The breakthrough point is characterized by the beginning of a sharp increase in the outlet HAP or organic compound concentration.

Calibrate means to verify the accuracy of a measurement device against a known standard. For the purpose of this subpart, there are two levels of calibration. The initial calibration includes the verification of the accuracy of the device over the entire operating range of the device. Subsequent calibrations can be conducted for a point or several points in a limited range of operation that represents the most common operation of the device.

Canned motor pump means a pump with interconnected cavity housings, motor rotors, and pump casing. In a canned motor pump, the motor bearings run in the process liquid and all seals are eliminated.

Carbon adsorption system means a system consisting of a tank or container that contains a specific quantity of activated carbon. For the purposes of this subaprt, a carbon adsorption system is used as a control device for storage vessels. Typically, the spent carbon bed does not undergo regeneration, but is replaced.

Connector means flanged, screwed, or other joined fittings used to connect two pipe lines or a pipe line and a piece of equipment. A common connector is a flange. Joined fittings welded completely around the circumference of the interface are not considered to be connectors for the purposes of this subpart.

Cured foam means flexible polyurethane foam with fully developed physical properties. A period of 12 to 24 hours from pour is typically required to completely cure foam, although mechanical or other devices are sometimes used to accelerate the curing process.

Curing area means the area in a slabstock foam production facility where foam buns are allowed to fully develop physical properties.

Diaphragm pump means a pump where the driving member is a flexible diaphragm made of metal, rubber, or plastic. In a diaphragm pump, there is no packing or seals that are exposed to the process liquid.

Diisocyanate means a compound containing two isocyanate groups per molecule. The most common diisocyanate

compounds used in the flexible polyurethane foam industry are toluene diisocyanate (TDI) and methylene diphenyl diisocyanate (MDI).

Flexible polyurethane foam means a flexible cellular polymer containing urea and carbamate linkages in the chain backbone produced by reacting a diisocyanate, polyol, and water. Flexible polyurethane foams are open-celled, permit the passage of air through the foam, and possess the strength and flexibility to allow repeated distortion or compression under stress with essentially complete recovery upon removal of the stress.

Flexible polyurethane foam process means the equipment used to produce a flexible polyurethane foam product. For the purpose of this subpart, the flexible polyurethane foam process includes raw material storage; production equipment and associated piping, ductwork, etc.; and curing and storage areas.

Foam fabrication process means an operation for cutting or bonding flexible polyurethane foam pieces together or to other substrates.

Grade of foam means foam with a distinct combination of indentation force deflection (IFD) and density values.

HAP ABA means methylene chloride, or any other HAP compound used as an auxiliary blowing agent.

HAP-based means to contain 5 percent (by weight) or more of HAP. This applies to equipment cleaners (and mixhead flushes) and mold release agents. The concentration of HAP may be determined using EPA test method 18, material safety data sheets, or engineering calculations.

High-pressure mixhead means a mixhead where mixing is achieved by impingement of the high pressure streams within the mixhead.

Indentation Force Deflection (IFD) means a measure of the load bearing capacity of flexible polyurethane foam. IFD is generally measured as the force (in pounds) required to compress a 50 square inch circular indentor foot into a four inch thick sample, typically 15 inches square or larger, to 25 percent of the sample's initial height.

In diisocyanate service means a piece of equipment that contains or contacts a diisocyanate.

In HAP ABA service means a piece of equipment that contains or contacts a HAP ABA.

Initial startup means the first time a new or reconstructed affected source begins production of flexible polyurethane foam.

Isocyanate means a reactive chemical grouping composed of a nitrogen atom bonded to a carbon atom bonded to an oxygen atom; or a chemical compound, usually organic, containing one or more isocyanate groups.

Magnetic drive pump means a pump where an externally-mounted magnet coupled to the pump motor drives the impeller in the pump casing. In a magnetic drive pump, no seals contact the process fluid.

Metering pump means a pump used to deliver reactants, ABA, or additives to the mixhead.

Mixhead means a device that mixes two or more component streams before dispensing foam producing mixture to the desired container.

Molded flexible polyurethane foam means a flexible polyurethane foam that is produced by shooting the foam mixture into a mold of the desired shape and size.

Mold release agent means any material which, when applied to the mold surface, serves to prevent sticking of the foam part to the mold.

Plant site means all contiguous or adjoining property that is under common control, including properties that are separated only by a road or other public right-of-way. Common control includes properties that are owned, leased, or otherwise operated by the same entity, parent entity, subsidiary, or any combination thereof.

Polyol, for the purpose of this subpart, means a polyether or polyester polymer with more than one reactive hydroxyl group attached to the molecule.

Rebond foam means the foam resulting from a process of adhering small particles of foam (usually scrap or recycled foam) together to make a usable cushioning product. Various adhesives and bonding processes are used. A typical application for rebond foam is for carpet underlay.

Rebond foam process means the equipment used to produce a rebond foam

product. For the purpose of this subpart, the rebond foam process includes raw material storage; production equipment and associated piping, ductwork, etc.; and curing and storage areas.

Reconstructed source means an affected source undergoing reconstruction, as defined in subpart A. For the purposes of this subpart, process modifications made to reduce HAP ABA emissions to meet the existing source requirements of this subpart shall not be counted in determining whether or not a change or replacement meets the definition of reconstruction.

Recovery device means an individual unit of equipment capable of and used for the purpose of recovering chemicals for use, reuse, or sale. Recovery devices include, but are not limited to, carbon adsorbers, absorbers, and condensers.

Research and development process means a laboratory or pilot plant operation whose primary purpose is to conduct research and development into new processes and products, where the operations are under the close supervision of technically trained personnel, and which is not engaged in the manufacture of products for commercial sale except in a de minimis manner.

Run of foam means a continuous production of foam, which may consist of several grades of foam.

Sealless pump means a canned-motor pump, diaphragm pump, or magnetic drive pump, as defined in this section.

Slabstock flexible polyurethane foam means flexible polyurethane foam that is produced in large continuous buns that are then cut into the desired size and shape.

Slabstock flexible polyurethane foam production line includes all portions of the flexible polyurethane foam process from the mixhead to the point in the process where the foam is completely cured.

Storage vessel means a tank or other vessel that is used to store diisocyanate or HAP ABA for use in the production of flexible polyurethane foam. Storage vessels do not include vessels with capacities smaller than 38 cubic meters (or 10,000 gallons).

Transfer pump means all pumps used to transport diisocyanate or HAP ABA that are not metering pumps.

Transfer vehicle means a railcar, tank truck, or other vehicle used to transport HAP ABA to the flexible polyurethane foam facility.

§ 63.1293 Standards for slabstock flexible polyurethane foam production.

Each owner or operator of a new or existing slabstock affected source shall comply with § 63.1294 and either paragraph (a) or (b) of this section:

(a) The emission point specific limitations in §§ 63.1295 through 63.1298; or

(b) For sources that use no more than one HAP as an ABA and an equipment cleaner, the source-wide emission limitation in § 63.1299.

§ 63.1294 Standards for slabstock flexible polyurethane foam production—diisocyanate emissions.

Each new and existing slabstock affected source shall comply with the provisions of this section.

(a) *Diisocyanate storage vessels.* Diisocyanate storage vessels shall be equipped with either a system meeting the requirements in paragraph (a)(1) of this section, or a carbon adsorption system meeting the requirements of paragraph (a)(2) of this section.

(1) The storage vessel shall be equipped with a vapor return line from the storage vessel to the tank truck or rail car that is connected during unloading.

(i) During each unloading event, the vapor return line shall be inspected for leaks by visual, audible, or any other detection method.

(ii) When a leak is detected, it shall be repaired as soon as practicable, but not later than the subsequent unloading event.

(2) The storage vessel shall be equipped with a carbon adsorption system, meeting the monitoring requirements of § 63.1303(a), that routes displaced vapors through activated carbon before being discharged to the atmosphere. The owner or operator shall replace the existing carbon with fresh carbon upon indication of breakthrough before the next unloading event.

(b) *Transfer pumps in diisocyanate service.* Each transfer pump in

diisocyanate service shall meet the requirements of paragraph (b)(1) or (b)(2) of this section.

(1) The pump shall be a sealless pump; or

(2) The pump shall be a submerged pump system meeting the requirements in paragraphs (b)(2)(i) through (iii) of this section.

(i) The pump shall be completely immersed in bis(2-ethylhexyl)phthalate (DEHP, CAS #118–81–7), 2(methyloctyl)phthalate (DINP, CAS #68515–48–0), or another neutral oil.

(ii) The pump shall be visually monitored weekly to detect leaks,

(iii) When a leak is detected, it shall be repaired in accordance with the procedures in paragraphs (b)(2)(iii)(A) and (B) of this section, except as provided in paragraph (d) of this section.

(A) The leak shall be repaired as soon as practicable, but not later than 15 calendar days after it is detected.

(B) A first attempt at repair shall be made no later than 5 calendar days after the leak is detected. First attempts at repair include, but are not limited to, the following practices where practicable:

(*1*) Tightening of packing gland nuts.

(*2*) Ensuring that the seal flush is operating at design pressure and temperature.

(c) *Other components in diisocyanate service*. If evidence of a leak is found by visual, audible, or any other detection method, it shall be repaired as soon as practicable, but not later than 15 calendar days after it is detected, except as provided in paragraph (d) of this section. The first attempt at repair shall be made no later than 5 calendar days after each leak is detected.

(d) *Delay of repair*. (1) Delay of repair of equipment for which leaks have been detected is allowed for equipment that is isolated from the process and that does not remain in diisocyanate service.

(2) Delay of repair for valves and connectors is also allowed if:

(i) The owner or operator determines that diisocyanate emissions of purged material resulting from immediate repair are greater than the fugitive emissions likely to result from delay of repair, and

(ii) The purged material is collected and destroyed or recovered in a control device when repair procedures are effected.

(3) Delay of repair for pumps is also allowed if repair requires replacing the existing seal design with a sealless pump, and repair is completed as soon as practicable, but not later than 6 months after the leak was detected.

§ 63.1295 Standards for slabstock flexible polyurethane foam production—HAP ABA storage vessels.

Each owner or operator of a new or existing slabstock affected source complying with the emission point specific limitation option provided in § 63.1293(a) shall control HAP ABA storage vessels in accordance with the provisions of this section.

(a) Each HAP ABA storage vessel shall be equipped with either a vapor balance system meeting the requirements in paragraph (b) of this section, or a carbon adsorption system meeting the requirements of paragraph (c) of this section.

(b) The storage vessel shall be equipped with a vapor balance system. The owner or operator shall ensure that the vapor return line from the storage vessel to the tank truck or rail car is connected during unloading.

(1) During each unloading event, the vapor return line shall be inspected for leaks by visual, audible, olfactory, or any other detection method.

(2) When a leak is detected, it shall be repaired as soon as practicable, but not later than the subsequent unloading event.

(c) The storage vessel shall be equipped with a carbon adsorption system, meeting the monitoring requirements of § 63.1303(a), that routes displaced vapors through activated carbon before discharging to the atmosphere. The owner or operator shall replace the existing carbon with fresh carbon upon indication of breakthrough before the next unloading event.

§ 63.1296 Standards for slabstock flexible polyurethane foam production—HAP ABA equipment leaks.

Each owner or operator of a new or existing slabstock affected source complying with the emission point specific

limitation option provided in § 63.1293(a) shall control HAP ABA emissions from leaks from transfer pumps, valves, connectors, pressure-relief valves, and open-ended lines in accordance with the provisions in this section.

(a) *Pumps.* Each pump in HAP ABA service shall be controlled in accordance with either paragraph (a)(1) or (a)(2) of this section.

(1) The pump shall be a sealless pump, or

(2) Each pump shall be monitored for leaks in accordance with paragraphs (a)(2)(i) and (ii) of this section. Leaks shall be repaired in accordance with paragraph (a)(2)(iii) of this section.

(i) Each pump shall be monitored quarterly to detect leaks by the method specified in § 63.1304(a). If an instrument reading of 10,000 parts per million (ppm) or greater is measured, a leak is detected.

(ii) Each pump shall be checked by visual inspection each calendar week for indications of liquids dripping from the pump seal. If there are indications of liquids dripping from the pump seal, a leak is detected.

(iii) When a leak is detected, it shall be repaired in accordance with the procedures in paragraphs (a)(2)(iii)(A) and (B) of this section, except as provided in paragraph (f) of this section.

(A) The leak shall be repaired as soon as practicable, but not later than 15 calendar days after it is detected.

(B) A first attempt at repair shall be made no later than 5 calendar days after the leak is detected. First attempts at repair include, but are not limited to, the following practices, where practicable:

(*1*) Tightening of packing gland nuts.

(*2*) Ensuring that the seal flush is operating at design pressure and temperature.

(b) *Valves.* Each valve in HAP ABA service shall be monitored for leaks in accordance with paragraph (b)(1) of this section, except as provided in paragraphs (b)(3) and (4) of this section. Leaks shall be repaired in accordance with paragraph (b)(2) of this section.

(1) Each valve shall be monitored quarterly to detect leaks by the method specified in § 63.1304(a). If an instrument reading of 10,000 parts per million or greater is measured, a leak is detected.

(2) When a leak is detected, the owner or operator shall repair the leak in accordance with the procedures in paragraphs (b)(2)(i) and (ii) of this section, except as provided in paragraph (f) of this section.

(i) The leak shall be repaired as soon as practicable, but not later than 15 calendar days after it is detected.

(ii) A first attempt at repair shall be made no later than 5 calendar days after the leak is detected. First attempts at repair include, but are not limited to, the following practices where practicable:

(A) Tightening of bonnet bolts;

(B) Replacement of bonnet bolts;

(C) Tightening of packing gland nuts; and

(D) Injection of lubricant into lubricated packing.

(3) Any valve that is designated as an unsafe-to-monitor valve is exempt from the requirements of paragraphs (b)(1) and (2) of this section if:

(i) The owner or operator of the valve determines that the valve is unsafe to monitor because monitoring personnel would be exposed to an immediate danger as a consequence of complying with paragraphs (b)(1) and (2) of this section; and

(ii) The owner or operator of the valve has a written plan that requires monitoring of the valve as frequently as practicable during safe-to-monitor times. The plan shall also include requirements for repairing leaks as soon as possible after detection.

(iii) The owner or operator shall monitor the unsafe-to-monitor valve in accordance with the written plan, and

(iv) The owner or operator shall repair leaks in accordance with the written plan.

(4) Any valve that is designated as a difficult-to-monitor valve is exempt from the requirements of paragraphs (b)(1) and (2) of this section if:

(i) The owner or operator of the valve determines that the valve cannot be monitored without elevating the monitoring personnel more than 2 meters above a support surface or it is not accessible at any time in a safe manner;

(ii) The process within which the valve is located is an existing source,

or the process within which the valve is located is a new source that has less than 3 percent of the total number of valves designated as difficult to monitor; and

(iii) The owner or operator of the valve develops a written plan that requires monitoring of the valve at least once per calendar year. The plan shall also include requirements for repairing leaks as soon as possible after detection.

(iv) The owner or operator shall monitor the difficult-to-monitor valve in accordance with the written plan, and

(v) The owner or operator shall repair leaks in accordance with the written plan.

(c) *Connectors.* Each connector in HAP ABA service shall be monitored for leaks in accordance with paragraph (c)(1) of this section, except as provided in paragraph (c)(3) of this section. Leaks shall be repaired in accordance with (c)(2) of this section, except as provided in paragraph (c)(4) of this section.

(1) Connectors shall be monitored at the times specified in paragraphs (c)(1)(i) through (iii) of this section to detect leaks by the method specified in §63.1304(a). If an instrument reading of 10,000 ppm or greater is measured, a leak is detected.

(i) Each connector shall be monitored annually, and

(ii) Each connector that has been opened or has otherwise had the seal broken shall be monitored for leaks within the first 3 months after being returned to HAP ABA service.

(iii) If a leak is detected, the connector shall be monitored for leaks in accordance with paragraph (c)(1) of this section within the first 3 months after its repair.

(2) When a leak is detected, it shall be repaired in accordance with the procedures in paragraphs (c)(2)(i) and (ii) of this section, except as provided in paragraph (c)(4) and paragraph (f) of this section.

(i) The leak shall be repaired as soon as practicable, but no later than 15 calendar days after the leak is detected.

(ii) A first attempt at repair shall be made no later than 5 calendar days after the leak is detected.

(3) Any connector that is designated as an unsafe-to-monitor connector is exempt from the requirements of paragraph (c)(1) of this section if:

(i) The owner or operator determines that the connector is unsafe to monitor because personnel would be exposed to an immediate danger as a result of complying with paragraph (c)(1) of this section; and

(ii) The owner or operator has a written plan that requires monitoring of the connector as frequently as practicable during safe-to-monitor periods.

(4) Any connector that is designated as an unsafe-to-repair connector is exempt from the requirements of paragraph (c)(2) of this section if:

(i) The owner or operator determines that repair personnel would be exposed to an immediate danger as a consequence of complying with paragraph (c)(2) of this section; and

(ii) The connector will be repaired as soon as practicable, but not later than 6 months after the leak was detected.

(d) *Pressure-relief devices.* Each pressure-relief device in HAP ABA service shall be monitored for leaks in accordance with paragraph (d)(1) of this section. Leaks shall be repaired in accordance with paragraph (d)(2) of this section.

(1) Each pressure-relief device in HAP ABA service shall be monitored within 5 calendar days by the method specified in §63.1304(a) if evidence of a potential leak is found by visual, audible, olfactory, or any other detection method. If an instrument reading of 10,000 ppm or greater is measured, a leak is detected.

(2) When a leak is detected, the leak shall be repaired as soon as practicable, but not later than 15 calendar days after it is detected, except as provided in paragraph (f) of this section. The owner or operator shall make a first attempt at repair no later than 5 calendar days after the leak is detected.

(e) *Open-ended valves or lines.* (1)(i) Each open-ended valve or line in HAP ABA service shall be equipped with a cap, blind flange, plug, or a second valve, except as provided in paragraph (e)(4) of this section.

(ii) The cap, blind flange, plug, or second valve shall seal the open end at

all times except during operations requiring process fluid flow through the open-ended valve or line, or during maintenance or repair.

(2) Each open-ended valve or line equipped with a second valve shall be operated in a manner such that the valve on the process fluid end is closed before the second valve is closed.

(3) When a double block and bleed system is being used, the bleed valve or line may remain open during operations that require venting the line between the block valves but shall comply with paragraph (e)(1) of this section at all other times.

(4) Open-ended valves or lines in an emergency shutdown system which are designed to open automatically in the event of a process upset are exempt from the requirements of paragraphs (e)(1), (2), and (3) of this section.

(f) *Delay of repair*. (1) Delay of repair of equipment for which leaks have been detected is allowed for equipment that is isolated from the process and that does not remain in HAP ABA service.

(2) Delay of repair for valves and connectors is also allowed if:

(i) The owner or operator determines that emissions of purged material resulting from immediate repair are greater than the fugitive emissions likely to result from delay of repair, and

(ii) The purged material is collected and destroyed or recovered in a control device when repair procedures are effected.

(3) Delay of repair for pumps is also allowed if repair requires replacing the existing seal design with a sealless pump, and repair is completed as soon as practicable, but not later than 6 months after the leak was detected.

§ 63.1297 Standards for slabstock flexible polyurethane foam production—HAP ABA emissions from the production line.

(a) Each owner or operator of a new or existing slabstock affected source complying with the emission point specific limitation option provided in § 63.1293(a)(1) shall control HAP ABA emissions from the slabstock polyurethane foam production line in accordance with the provisions in this section. Compliance shall be determined on a rolling annual basis as described in paragraph (a)(1) of this section. As an alternative, the owner or operator can determine compliance on a monthly basis, as described in paragraph (a)(2) of this section.

(1) *Rolling annual compliance*. In determining compliance on a rolling annual basis, actual HAP ABA emissions shall be compared to allowable HAP ABA emissions for each consecutive 12-month period. The allowable HAP ABA emission level shall be calculated based on the production for the 12-month period, resulting in a potentially different allowable level for each 12-month period. Compliance shall be determined each month for the previous 12-month period. The compliance requirements are provided in paragraph (b) of this section.

(2) *Monthly compliance alternative*. As an alternative to determining compliance on a rolling annual basis, an owner or operator can determine compliance by comparing actual HAP ABA emissions to allowable HAP ABA emissions for each month. The allowable HAP ABA emission level shall be calculated based on the production for the month, resulting in a potentially different allowable level each month. The requirements for this monthly compliance alternative are provided in paragraph (c) of this section.

(3) Each owner or operator electing to change between the compliance methods described under paragraphs (a)(1) and (a)(2) of this section shall notify the Administrator no later than 180 calendar days prior to the change.

(b) *Rolling annual compliance*. At each slabstock foam production source complying with the rolling annual compliance provisions described in paragraph (a)(1) of this section, actual HAP ABA emissions shall not exceed the allowable HAP ABA emission level for a consecutive 12-month period. The actual HAP ABA emission level for a consecutive 12-month period shall be determined using the procedures in paragraph (b)(1) of this section, and the allowable HAP ABA emission level for the corresponding 12-month period shall be calculated in accordance with paragraph (b)(2) of this section.

(1) The actual HAP ABA emissions for a 12-month period shall be calculated as the sum of actual monthly HAP ABA emissions for each of the individual 12 months in the period. Actual monthly HAP ABA emissions shall be equal to the amount of HAP ABA added to the slabstock foam production line at the mixhead, determined in accordance with § 63.1303(b), unless a recovery device is used. Slabstock foam production sources using recovery devices to reduce HAP ABA emissions shall determine actual monthly HAP ABA emissions using the procedures in paragraph (e) of this section.

(2) The allowable HAP ABA emissions for a consecutive 12-month period shall be calculated as the sum of allowable monthly HAP ABA emissions for each of the individual 12 months in the period. Allowable HAP ABA emissions for each individual month shall be calculated using Equation 2.

$$\text{emiss}_{\text{allow, month}} = \sum_{j=1}^{m}\left(\sum_{i=1}^{n}\frac{(\text{limit}_i)\,(\text{polyol}_i)}{100}\right)j \qquad \text{(Equation 2)}$$

Where:

$\text{emiss}_{\text{allow,month}}$ = Allowable HAP ABA emissions from the slabstock foam production source for the month, pounds.

m = Number of slabstock foam production lines.

polyol_i = Amount of polyol used in the month in the production of foam grade i on foam production line j, determined in accordance with paragraph (b)(3) of this section, pounds.

n = Number of foam grades produced in the month on foam production line j.

limit_i = HAP ABA formulation limit for foam grade i, parts HAP ABA per 100 parts polyol. The HAP ABA formulation limits are determined in accordance with paragraph (d) of this section.

(3) The amount of polyol used for specific foam grades shall be based on the amount of polyol added to the slabstock foam production line at the mixhead, determined in accordance with the provisions of § 63.1303(b).

(c) *Monthly compliance alternative.* At each slabstock foam production source complying with the monthly compliance alternative described in paragraph (a)(2) of this section, actual HAP ABA emissions shall not exceed the corresponding allowable HAP ABA emission level for the same month. The actual monthly HAP ABA emission level shall be determined using the procedures in paragraph (c)(1) of this section, and the allowable monthly HAP ABA emission level shall be calculated in accordance with paragraph (c)(2) of this section.

(1) The actual monthly HAP ABA emissions shall be equal to the amount of HAP ABA added to the slabstock foam production line at the mixhead, determined in accordance with § 63.1303(b), unless a recovery device is used. Slabstock foam production sources using recovery devices to reduce HAP ABA emissions shall determine actual monthly HAP ABA emissions using the procedures in paragraph (e) of this section.

(2) The allowable HAP ABA emissions for the month shall be determined in accordance with Equation 2 of this section.

(d) *HAP ABA formulation limitations.* For each grade, the HAP ABA formulation limitation shall be determined in accordance with paragraphs (d)(1) through (d)(3) of this section. For any grade, the owner or operator may designate zero as the HAP ABA formulation limitation and not determine the HAP ABA formulation limitation in accordance with paragraphs (d)(1) through (d)(3) of this section.

(1) For existing sources, the HAP ABA formulation limitation for each grade of slabstock foam produced shall be determined using Equation 3 of this section. Zero shall be the formulation limitation for any grade of foam where

the result of the formulation limitation equation (Equation 3) is negative (i.e., less than zero).

$$ABA_{limit} = -0.25(IFD) - 19.1\left(\frac{1}{IFD}\right) - 16.2(DEN) - 7.56\left(\frac{1}{DEN}\right) + 36.5 \qquad \text{(Equation 3)}$$

Where:

ABA_{limit}= HAP ABA formulation limitation, parts HAP ABA allowed per hundred parts polyol (pph).

IFD = Indentation force deflection, pounds.

DEN = Density, pounds per cubic foot.

(2) For new sources, the HAP ABA formulation limitation for each grade of slabstock foam produced shall be determined as described in paragraphs (d)(2)(i) through (d)(2)(iv) of this section and in Table 1 of this subpart.

(i) For each foam grade with a density of 0.95 pounds per cubic foot or less, the HAP ABA formulation limitation shall be determined using Equation 3. Zero shall be the formulation limitation for any grade of foam where the result of the formulation limitation equation (Equation 3 of this section) is negative (i.e., less than zero).

(ii) For each foam grade with a density of 1.4 pounds per cubic foot or less, and an IFD of 15 pounds or less, the HAP ABA formulation limitation shall be determined using Equation 3.

(iii) For each foam grade with a density greater than 0.95 pounds per cubic foot and an IFD greater than 15 pounds, the HAP ABA formulation limitation shall be zero.

(iv) For each foam grade with a density greater than 1.40 pounds per cubic foot, the HAP ABA formulation limitation shall be zero.

(3) With the exception of those grades for which the owner or operator has designated zero as the HAP ABA formulation limitation, the IFD and density for each foam grade shall be determined in accordance with § 63.1304(b) and recorded in accordance with § 63.1307(c)(1)(i)(B) or § 63.1307(c)(2)(i)(B) within 10 working days of the production of the foam.

(e) *Compliance using recovery devices.* If a recovery device is used to comply with paragraphs (b) or (c) of this section, the owner or operator shall determine the allowable HAP ABA emissions for each month using Equation 2 in paragraph (b)(2) of this section, and the actual monthly HAP ABA emissions in accordance with paragraph (e)(1) of this section. The owner or operator shall also comply with the provisions of paragraph (e)(2) of this section.

(1) The actual monthly HAP ABA emissions shall be determined using Equation 4:

$$E_{actual} = E_{unc} - HAPABA_{recovered} \qquad \text{(Equation 4)}$$

Where:

E_{actual} = Actual HAP ABA emissions after control, pounds/month.

E_{unc} = Uncontrolled HAP ABA emissions, pounds/month, determined in accordance with paragraph (b)(1) of this section.

$HAPABA_{recovered}$ = HAP ABA recovered, pounds/month, determined in accordance with paragraph (e)(2) of this section.

(2) The amount of HAP ABA recovered shall be determined in accordance with § 63.1303(c).

§63.1298 Standards for slabstock flexible polyurethane foam production—HAP emissions from equipment cleaning.

Each owner or operator of a new or existing slabstock affected source complying with the emission point specific limitation option provided in §63.1293(a)(1) shall not use a HAP or a HAP-based material as an equipment cleaner.

§63.1299 Standards for slabstock flexible polyurethane foam production—source-wide emission limitation.

Each owner or operator of a new or existing slabstock affected source complying with the source-wide emission limitation option provided in §63.1293(b) shall control HAP ABA storage and equipment leak emissions, HAP ABA emissions from the production line, and equipment cleaning HAP emissions in accordance with the provisions in this section. Compliance shall be determined on a rolling annual basis in accordance with paragraph (a) of this section. As an alternative, the owner or operator can determine compliance monthly, as described in paragraph (b) of this section.

(a) *Rolling annual compliance.* Under the rolling annual compliance provisions, actual source-wide HAP ABA storage and equipment leak emissions, HAP ABA emissions from the production line, and equipment cleaning HAP emissions are compared to allowable source-wide emissions for each consecutive 12-month period. The allowable source-wide HAP emission level is calculated based on the production for the 12-month period, resulting in a potentially different allowable level for each 12-month period. While compliance is on an annual basis, compliance shall be determined monthly for the preceding 12-month period. The actual source-wide HAP emission level for a consecutive 12-month period shall be determined using the procedures in paragraphs (c)(1) through (4) of this section, unless a recovery device is used. Slabstock foam production sources using recovery devices shall determine actual source-wide HAP emissions in accordance with paragraph (e) of this section. The allowable HAP emission level for a consecutive 12-month period shall be determined using the procedures in paragraph (d) of this section.

(b) *Monthly compliance alternative.* As an alternative to determining compliance on a rolling annual basis, an owner or operator can determine compliance by comparing actual HAP emissions to allowable HAP emissions for each month. The allowable source-wide emission level is calculated based on the production for the month, resulting in a potentially different allowable level each month. The actual monthly emission level shall be determined using the procedures in paragraphs (c)(1) through (3) of this section, unless a recovery device is used. Slabstock foam production sources using recovery devices shall determine actual source-wide HAP emissions in accordance with paragraph (e) of this section. The allowable monthly HAP ABA emission level shall be determined in accordance with Equation 6.

(c) *Procedures for determining actual source-wide HAP emissions.* The actual source-wide HAP ABA storage and equipment leak emissions, HAP ABA emissions from the production line, and equipment cleaning HAP emissions shall be determined using the procedures in this section. Actual source-wide HAP emissions for each individual month shall be determined using the procedures specified in paragraphs (c)(1) through (3) of this section.

(1) Actual source-wide HAP emissions for a month shall be determined using Equation 5 and the information determined in accordance with paragraphs (c)(2) and (3) of this section.

$$PWE_{actual} = \sum_{i}^{n} \left(ST_{i,\ begin} - ST_{i,\ end} + ADD_i \right) \qquad \text{(Equation 5)}$$

Where:

PWE_{actual} = Actual source-wide HAP ABA and equipment cleaning HAP emissions for a month, pounds/month.

n = Number of HAP ABA storage vessels.

$ST_{i,\ begin}$ = Amount of HAP ABA in storage vessel i at the beginning of the month, pounds, determined in accordance with the procedures listed in paragraph (c)(2) of this section.

$ST_{i,\ end}$ = Amount of HAP ABA in storage vessel i at the end of the month, pounds, determined in accordance with the procedures listed in paragraph (c)(2) of this section.

ADD_i = Amount of HAP ABA added to storage vessel i during the month, pounds, determined in accordance with the procedures listed in paragraph (c)(3) of this section.

(2) The amount of HAP ABA in a storage vessel shall be determined by monitoring the HAP ABA level in the storage vessel in accordance with § 63.1303(d).

(3) The amount of HAP ABA added to a storage vessel for a given month shall be the sum of the amounts of all individual HAP ABA deliveries that occur during the month. The amount of each individual HAP ABA delivery shall be determined in accordance with § 63.1303(e).

(4) Actual source-wide HAP emissions for each consecutive 12-month period shall be calculated as the sum of actual monthly source-wide HAP emissions for each of the individual 12 months in the period, calculated in accordance with paragraphs (c) (1) through (3) of this section.

(d) Allowable source-wide HAP emissions for a consecutive 12-month period shall be calculated as the sum of allowable monthly source-wide HAP emissions for each of the individual 12 months in the period. Allowable source-wide HAP emissions for each individual month shall be calculated using Equation 6.

$$emiss_{allow,\ month} = \sum_{j=1}^{m}\left(\sum_{i=1}^{n}\frac{(limit_i)\ (polyol_i)}{100}\right)j \qquad \text{(Equation 6)}$$

Where:

$emiss_{allow,\ month}$ = Allowable HAP ABA storage and equipment leak emissions, HAP ABA emissions from the production line, and equipment cleaning HAP emissions from the slabstock foam production source for the month, pounds.

m = Number of slabstock foam production lines.

$polyol_i$ = Amount of polyol used in the month in the production of foam grade i on foam production line j, determined in accordance with § 63.1303(b), pounds.

n = Number of foam grades produced in the month on foam production line j.

$limit_i$ = HAP ABA formulation limit for foam grade i, parts HAP ABA per 100 parts polyol. The HAP ABA formulation limits are determined in accordance with § 63.1297(d).

(e) *Compliance using recovery devices.* If a recovery device is used to comply with paragraphs (a) or (b) of this section, the owner or operator shall determine the allowable source-wide HAP emissions for each month using Equation 6 in paragraph (d) of this section, and the actual monthly source-wide HAP emissions in accordance with paragraph (e)(1) of this section. The owner or operator shall also comply with the provisions of paragraph (e)(2) of this section.

(1) Actual monthly source-wide HAP emissions shall be determined using Equation 7.

$$E_{actual} = E_{unc} - HAPABA_{recovered} \qquad \text{(Equation 7)}$$

Where:

E_{actual} = Actual source-wide HAP emissions after control, pounds/month.

E_{unc} = Uncontrolled source-wide HAP emissions, pounds/month, determined in accordance with paragraph (c) (1) through (3) of this section.

$HAPABA_{recovered}$ = HAP ABA recovered, pounds/month, determined in accordance with paragraph (e)(2) of this section.

(2) The amount of HAP ABA recovered shall be determined in accordance with §63.1303(c).

§63.1300 Standards for molded flexible polyurethane foam production.

Each owner or operator of a new or existing molded affected source shall comply with the provisions in paragraphs (a) and (b) of this section.

(a) A HAP or HAP-based material shall not be used as an equipment cleaner to flush the mixhead, nor shall it be used elsewhere as an equipment cleaner in a molded flexible polyurethane foam process, with the following exception. Diisocyanates may be used to flush the mixhead and associated piping during periods of startup or maintenance, provided that the diisocyanate compounds are contained in a closed-loop system and are re-used in production.

(b) A HAP-based mold release agent shall not be used in a molded flexible polyurethane foam source process.

§63.1301 Standards for rebond foam production.

Each owner or operator of a new or existing rebond foam affected source shall comply with the provisions in paragraphs (a) and (b) of this section.

(a) A HAP or HAP-based material shall not be used as an equipment cleaner at a rebond foam source.

(b) A HAP-based mold release agent shall not be used in a rebond foam source.

§63.1302 Applicability of subpart A requirements.

The owner or operator of an affected source shall comply with the applicable requirements of subpart A of this part, as specified in Table 2 of this subpart.

§63.1303 Monitoring requirements.

Owners and operators of affected sources shall comply with each applicable monitoring provision in this section.

(a) *Monitoring requirements for storage vessel carbon adsorption systems.* Each owner or operator using a carbon adsorption system to meet the requirements of §63.1294(a) or §63.1295 shall monitor the concentration level of the HAP or the organic compounds in the exhaust vent stream (or outlet stream exhaust) from the carbon adsorption system at the frequency specified in (a)(1) or (2) of this section in accordance with either (a)(3) or (4) of this section.

(1) The concentration level of HAP or organic compounds shall be monitored during each unloading event, or once per month during an unloading event if multiple unloading events occur in a month.

(2) As an alternative to monthly monitoring, the owner or operator can set the monitoring frequency at an interval no greater than 20 percent of the carbon replacement interval, which is established using a design analysis described below in paragraphs (a)(1)(i) through (iii) of this section.

(i) The design analysis shall consider the vent stream composition, constituent concentration, flow rate, relative humidity, and temperature.

(ii) The design analysis shall establish the outlet organic concentration level, the capacity of the carbon bed, and the working capacity of activated carbon used for the carbon bed, and

(iii) The design analysis shall establish the carbon replacement interval based on the total carbon working capacity of the carbon adsorption system

and the schedule for filling the storage vessel.

(3) Measurements of HAP concentration shall be made using 40 CFR part 60, appendix A, Method 18. The measurement shall be conducted over at least one 5-minute interval during which the storage vessel is being filled.

(4) Measurements of organic compounds shall be made using 40 CFR part 60, Appendix A, Method 25A. The measurement shall be conducted over at least one 5-minute interval during which the storage vessel is being filled.

(b) *Monitoring for HAP ABA and polyol added to the foam production line at the mixhead.* (1) The owner or operator of each slabstock affected source shall comply with the provisions in paragraph (b)(1)(i) of this section, and, if applicable, the provisions of paragraph (b)(1)(ii) of this section. Alternatively, the owner or operator may comply with paragraph (b)(5) of this section.

(i) Owners or operators of all slabstock affected sources shall continuously monitor the amount of polyol added at the mixhead when foam is being poured, in accordance with paragraphs (b)(2) through (4) of this section.

(ii) Owners or operators of slabstock foam affected sources using the emission point specific limitation option provided in § 63.1293(a)(1) shall continuously monitor the amount of HAP ABA added at the mixhead when foam is being poured, in accordance with paragraphs (b)(2)(ii), (b)(3), and (b)(4) of this section.

(2) The owner or operator shall monitor either:

(i) Pump revolutions; or

(ii) Flow rate.

(3) The device used to monitor the parameter from paragraph (b)(2) shall have an accuracy to within +/−2.0 percent of the HAP ABA being measured, and shall be calibrated initially, and periodically, in accordance with paragraph (b)(3)(i) or (ii) of this section.

(i) For polyol pumps, the device shall be calibrated at least once each 6 months.

(ii) For HAP ABA pumps, the device shall be calibrated at least once each month.

(4) Measurements must be recorded at the beginning and end of the production of each grade of foam within a run of foam.

(5) As an alternative to the monitoring described in paragraphs (b)(2) through (4) of this section, the owner or operator may develop an alternative monitoring program. Alternative monitoring programs must be submitted to the Administrator for approval in the Precompliance Report as specified in § 63.1306(c)(4) for existing sources or in the Application for approval of construction or reconstruction for new sources. If an owner or operator wishes to develop an alternative monitoring program after the compliance date, the program shall be submitted to the Administrator for approval before the owner or operator wishes to begin using the alternative program. If the Administrator does not notify the owner or operator of objections to the program, or any part of the program, within 45 days after its receipt, the program shall be deemed approved. Until the program is approved, the owner or operator of an affected source remains subject to the requirements of this subpart. The components of an alternative monitoring program shall include, at a minimum, the items listed in paragraphs (b)(5)(i) through (iv) of this section.

(i) A description of the parameter to be continuously monitored when foam is being poured to measure the amount of HAP ABA or polyol added at the mixhead.

(ii) A description of how the monitoring results will be recorded, and how the results will be converted into amount of HAP ABA or polyol delivered to the mixhead.

(iii) Data demonstrating that the monitoring device is accurate to within +/−2.0 percent.

(iv) Procedures to ensure that the accuracy of the parameter monitoring results is maintained. These procedures shall, at a minimum, consist of periodic calibration of all monitoring devices.

(c) *Recovered HAP ABA monitoring.* The owner or operator of each slabstock affected source using a recovery device to reduce HAP ABA emissions shall develop and comply with a recovered HAP ABA monitoring

and recordkeeping program. The components of these plans shall include, at a minimum, the items listed in paragraphs (c)(1) through (5) of this section. These plans must be submitted for approval in accordance with paragraph (c)(6) of this section.

(1) A device, installed, calibrated, maintained, and operated according to the manufacturer's specifications, that indicates the cumulative amount of HAP ABA recovered by the solvent recovery device over each 1-month period. The device shall be certified by the manufacturer to be accurate to within +/−2.0 percent.

(2) The location where the monitoring will occur shall ensure that the measurements are taken after HAP ABA has been fully recovered (i.e., after separation from water introduced into the HAP ABA during regeneration).

(3) A description of the parameter to be monitored, and the times the parameter will be monitored.

(4) Data demonstrating that the monitoring device is accurate to within +/−2.0 percent.

(5) Procedures to ensure that the accuracy of the parameter monitoring results is maintained. These procedures shall, at a minimum, consist of periodic calibration of all monitoring devices.

(6) Recovered HAP ABA monitoring and recordkeeping programs must be submitted to the Administrator for approval in the Precompliance Report as specified in §63.1306(c)(6) for existing sources or in the Application for approval of construction or reconstruction for new sources. If an owner or operator wishes to develop a recovered HAP ABA monitoring program after the compliance date, the program shall be submitted to the Administrator for approval before the owner or operator wishes to begin using the program. If the Administrator does not notify the owner or operator of objections to the program within 45 days after its receipt, the program shall be deemed approved. Until the program is approved, the owner or operator of an affected source remains subject to the requirements of this subpart.

(d) *Monitoring of HAP ABA in a storage vessel.* The amount of HAP ABA in a storage vessel shall be determined weekly by monitoring the HAP ABA level in the storage vessel using a level measurement device that meets the criteria described in paragraphs (d)(1) and either (d)(2) or (d)(3) of this section.

(1) The level measurement device must be calibrated initially and at least once per year thereafter.

(2) With the exception of visually-read level measurement devices (i.e., gauge glass), the device must have either a digital or printed output.

(3) If the level measurement device is a visually-read device, the device must be equipped with permanent graduated markings to indicate HAP ABA level in the storage tank.

(e) *Monitoring of HAP ABA added to a storage vessel.* The amount of HAP ABA added to a storage vessel during a delivery shall be determined in accordance with either paragraphs (e)(1), (2), (3), or (4) of this section.

(1) The volume of HAP ABA added to the storage vessel shall be determined by recording the volume in the storage vessel prior to the delivery and the volume after the delivery, provided that the storage tank level measurement device used to determine the levels meets the criteria in (d) of this section.

(2) The volume of HAP ABA added to the storage vessel shall be determined by monitoring the flow rate using a device with an accuracy of ± 2.0 percent, and calibrated initially and at least once each six months thereafter.

(3) The weight of HAP ABA added to the storage vessel shall be calculated as the difference of the full weight of the transfer vehicle prior to unloading into the storage vessel and the empty weight of the transfer vehicle after unloading into the storage vessel. The weight shall be determined using a scale meeting the requirements of either paragraph (e)(2)(i) or (ii) of this section.

(i) A scale approved by the State or local agencies using the procedures contained in Handbook 44, Specifications, Tolerances, and Other Technical Requirements for Weighing and Measuring Devices 1998 (incorporation by reference—see §63.14).

(ii) A scale determined to be in compliance with the requirements of the

National Institute of Standards and Technology Handbook 44 at least once per year by a registered scale technician.

(4) As an alternative to the monitoring options described in paragraphs (e)(1) through (e)(3) of this section, the owner or operator may develop an alternative monitoring program. Alternative monitoring programs must be submitted to the Administrator for approval in the Precompliance Report as specified in § 63.1306(c)(4) for existing sources or in the Application for approval of construction or reconstruction for new sources. If an owner or operator wishes to develop an alternative monitoring program after the compliance date, the program shall be submitted to the Administrator for approval before the owner or operator wishes to begin using the alternative program. If the Administrator does not notify the owner or operator of objections to the program within 45 days after its receipt, the program shall be deemed approved. Until the program is approved, the owner or operator of an affected source remains subject to the requirements of this subpart. The components of an alternative monitoring program shall include, at a minimum, the items listed in paragraphs (e)(3)(i) through (iv) of this section.

(i) A description of the parameter to be monitored to determine the amount of HAP ABA added to the storage vessel during a delivery,

(ii) A description of how the results will be recorded, and how the results will be converted into the amount of HAP ABA added to the storage vessel during a delivery,

(iii) Data demonstrating that the monitoring device is accurate to within ± 2.0 percent, and

(iv) Procedures to ensure that the accuracy of the monitoring measurements is maintained. These procedures shall, at a minimum, consist of periodic calibration of all monitoring devices.

§ 63.1304 Testing requirements.

Owners and operators of affected sources shall use the test methods listed in this section, as applicable, to demonstrate compliance with this subpart.

(a) *Test method and procedures to determine equipment leaks.* Monitoring, as required under § 63.1296, shall comply with the following requirements:

(1) Monitoring shall comply with Method 21 of 40 CFR part 60, appendix A.

(2) The detection instrument shall meet the performance criteria of Method 21 of 40 CFR part 60, appendix A, except that the instrument response factor criteria in section 3.1.2(a) of Method 21 shall be for the average composition of the source fluid, rather than for each individual VOC in the stream. For source streams that contain nitrogen, air, or other inerts which are not HAP or VOC, the average stream response factor shall be calculated on an inert-free basis. The response factor may be determined at any concentration for which monitoring for leaks will be conducted.

(3) The instrument shall be calibrated before use on each day of its use by the procedures specified in Method 21 of 40 CFR part 60, appendix A.

(4) Calibration gases shall be:

(i) Zero air (less than 10 ppm of hydrocarbon in air); and

(ii) A mixture of methane and air at a concentration of approximately, 1,000 ppm for all transfer pumps; and 500 ppm for all other equipment, except as provided in paragraph (a)(4)(iii) of this section.

(iii) The instrument may be calibrated at a higher methane concentration (up to 2,000 ppm) than the leak definition concentration for a specific piece of equipment for monitoring that piece of equipment. If the monitoring instrument's design allows for multiple calibration gas concentrations, then the lower concentration calibration gas shall be no higher than 2,000 ppm methane and the higher concentration calibration gas shall be no higher than 10,000 ppm methane.

(5) Monitoring shall be performed when the equipment is in HAP ABA service, in use with an acceptable surrogate volatile organic compound which is not a HAP ABA, or is in use with any other detectable gas or vapor.

(6) If no instrument is available onsite that will meet the performance criteria specified in section 3.1.2(a) of Method 21 of 40 CFR Part 60, appendix

A, the readings from an available instrument may be adjusted by multiplying by the average response factor for the stream.

(b) *Test method to determine foam properties.* The IFD and density of each grade of foam produced during each run of foam shall be determined using ASTM D3574–91, Standard Test Methods for Flexible Cellular Materials—Slab, Bonded, and Molded (incorporation by reference—see § 63.14), using a sample of foam cut from the center of the foam bun. The maximum sample size for which the IFD and density is determined shall not be larger than 24 inches by 24 inches by 4 inches. For grades of foam where the owner or operator has designated the HAP ABA formulation limitation as zero, the owner or operator is not required to determine the IFD and density in accordance with this paragraph.

§ 63.1305 Alternative means of emission limitation.

An owner or operator of an affected source may request approval to use an alternative means of emission limitation, following the procedures in this section.

(a) The owner or operator can request approval to use an alternative means of emission limitation in the precompliance report for existing sources, the application for construction or reconstruction for new sources, or at any time.

(b) This request shall include a complete description of the alternative means of emission limitation.

(c) Each owner or operator applying for permission to use an alternative means of emission limitation under § 63.6(g) shall be responsible for collecting and verifying data to demonstrate the emission reduction achieved by the alternative means of emission limitation.

(d) Use of the alternative means of emission limitation shall not begin until approval is granted by the Administrator in accordance with § 63.6(g).

§ 63.1306 Reporting requirements.

Owners and operators of affected sources shall comply with each applicable reporting provision in this section.

(a) *Initial notification.* Each affected source shall submit an initial notification in accordance with § 63.9(b).

(b) *Application for approval of construction or reconstruction.* Each owner or operator shall submit an application for approval of construction or reconstruction in accordance with the provisions of § 63.5(d).

(c) *Precompliance report.* Each slabstock affected source shall submit a precompliance report no later than 12 months before the compliance date. This report shall contain the information listed in paragraphs (c)(1) through (c)(8) of this section, as applicable.

(1) Whether the source will comply with the emission point specific limitations described in § 63.1293(a), or with the source-wide emission limitation described in § 63.1293(b).

(2) For a source complying with the emission point specific limitations, whether the source will comply on a rolling annual basis in accordance with § 63.1297(b), or will comply with the monthly alternative for compliance contained in § 63.1297(c).

(3) For a source complying with the source-wide emission limitation, whether the source will comply on a rolling annual basis in accordance with § 63.1299(a), or will comply with the monthly alternative for compliance contained in § 63.1299(b).

(4) A description of how HAP ABA and/or polyol added at the mixhead will be monitored. If the owner or operator is developing an alternative monitoring program, the alternative monitoring program containing the information in § 63.1303(b)(5)(i) through (iv) shall be submitted.

(5) Notification of the intent to use a recovery device to comply with the provisions of § 63.1297 or § 63.1299.

(6) For slabstock affected sources complying with § 63.1297 or § 63.1299 using a recovery device, the continuous recovered HAP ABA monitoring and recordkeeping program, developed in accordance with § 63.1303(c).

(7) For sources complying with the source-wide emission limitation, a description of how the amount of HAP ABA in a storage vessel shall be determined.

(8) For sources complying with the source-wide emission limitation, a description of how the amount of HAP ABA added to a storage vessel during a delivery will be monitored. If the owner or operator is developing an alternative monitoring program, the alternative monitoring program containing the information in § 63.1303(e)(4)(i) through (iv) shall be submitted.

(9) If the Administrator does not notify the owner or operator of objections to an alternative monitoring program submitted in accordance with (c)(4) or (c)(6) of this section, or a recovered HAP ABA monitoring and recordkeeping program submitted in accordance with (c)(7) of this section, the program shall be deemed approved 45 days after its receipt by the Administrator.

(d) *Notification of compliance status.* Each affected source shall submit a notification of compliance status report no later than 180 days after the compliance date. For slabstock affected sources, this report shall contain the information listed in paragraphs (d)(1) through (3) of this section, as applicable. This report shall contain the information listed in paragraph (d)(4) of this section for molded foam processes and in paragraph (d)(5) for rebond foam processes.

(1) A list of diisocyanate storage vessels, along with a record of the type of control utilized for each storage vessel.

(2) For transfer pumps in diisocyanate service, a record of the type of control utilized for each transfer pump.

(3) If the source is complying with the emission point specific limitations of §§ 63.1294 through 63.1298, the information listed in paragraphs (b)(3)(i) through (iii) of this section.

(i) A list of HAP ABA storage vessels, along with a record of the type of control utilized for each storage vessel.

(ii) A list of pumps, valves, connectors, pressure-relief devices, and open-ended valves or lines in HAP ABA service.

(iii) A list of any modifications to equipment in HAP ABA service made to comply with the provisions of § 63.1296.

(4) A statement that the molded foam affected source is in compliance with § 63.1300, or a statement that molded foam processes at an affected source are in compliance with § 63.1300.

(5) A statement that the rebond foam affected source is in compliance with § 63.1301, or that rebond processes at an affected source are in compliance with § 63.1301.

(e) *Semiannual reports.* Each slabstock affected source shall submit a report containing the information specified in paragraphs (e)(1) through (5) of this section semiannually no later than 60 days after the end of each 180 day period. The first report shall be submitted no later than 240 days after the date that the Notification of Compliance Status is due and shall cover the 6-month period beginning on the date that the Notification of Compliance Status Report is due.

(1) For slabstock affected sources complying with the rolling annual compliance provisions of either § 63.1297 or § 63.1299, the allowable and actual HAP ABA emissions (or allowable and actual source-wide HAP emissions) for each of the 12-month periods ending on each of the six months in the reporting period. This information is not required to be included in the initial semi-annual compliance report.

(2) For sources complying with the monthly compliance alternative of either § 63.1297 or § 63.1299, the allowable and actual HAP ABA emissions (or allowable and actual source-wide HAP emissions) for each of the six months in the reporting period.

(3) For sources complying with the storage vessel provisions of § 63.1294(a) or § 63.1295 using a carbon adsorption system, unloading events that occurred after breakthrough was detected and before the carbon was replaced.

(4) Any equipment leaks that were not repaired in accordance with § 63.1294(b)(2)(iii), § 63.1294(c), § 63.1296(a)(2)(iii), (b)(2), (b)(3)(iv), (b)(4)(v), (c)(2), (c)(4)(ii), and (d)(2).

(5) Any leaks in vapor return lines that were not repaired in accordance with § 63.1294(a)(1)(ii) or § 63.1295(b)(2).

(f) *Other reports.* (1) Change in selected emission limitation. An owner or operator electing to change their slabstock flexible polyurethane foam emission limitation (from emission point specific limitations to a source-

wide emission limitation, or vice versa), selected in accordance with §63.1293, shall notify the Administrator no later than 180 days prior to the change.

(2) *Change in selected compliance method.* An owner or operator changing the period of compliance for either §63.1297 or §63.1299 (between rolling annual and monthly) shall notify the Administrator no later than 180 days prior to the change.

(g) *Annual compliance certifications.* Each affected source subject to the provisions in §§63.1293 through 63.1301 shall submit a compliance certification annually.

(1) The compliance certification shall be based on information consistent with that contained in §63.1308 of this section, as applicable.

(2) A compliance certification required pursuant to a State or local operating permit program may be used to satisfy the requirements of this section, provided that the compliance certification is based on information consistent with that contained in §63.1308 of this section, and provided that the Administrator has approved the State or local operating permit program under part 70 of this chapter.

(3) Each compliance certification submitted pursuant to this section shall be signed by a responsible official of the company that owns or operates the affected source.

§63.1307 Recordkeeping requirements.

The applicable records designated in paragraphs (a) through (c) of this section shall be maintained by owners and operators of all affected sources.

(a) *Storage vessel records.* (1) A list of diisocyanate storage vessels, along with a record of the type of control utilized for each storage vessel.

(2) For each slabstock affected source complying with the emission point specific limitations of §§63.1294 through 63.1298, a list of HAP ABA storage vessels, along with a record of the type of control utilized for each storage vessel.

(3) For storage vessels complying through the use of a carbon adsorption system, paragraph (a)(3)(i) or (ii), and paragraph (a)(3)(iii) of this section.

(i) Records of dates and times when the carbon adsorption system is monitored for carbon breakthrough and the monitoring device reading, when the device is monitored in accordance with §63.1303(a); or

(ii) For affected sources monitoring at an interval no greater than 20 percent of the carbon replacement interval, in accordance with §63.1303(a)(2), the records listed in paragraphs (a)(3)(ii)(A) and (B) of this section.

(A) Records of the design analysis, including all the information listed in §63.1303(a)(2)(i) through (iii), and

(B) Records of dates and times when the carbon adsorption system is monitored for carbon breakthrough and the monitoring device reading.

(iii) Date when the existing carbon in the carbon adsorption system is replaced with fresh carbon.

(4) For storage vessels complying through the use of a vapor return line, paragraphs (a)(4)(i) through (iii) of this section.

(i) Dates and times when each unloading event occurs and each inspection of the vapor return line for leaks occurs.

(ii) Records of dates and times when a leak is detected in the vapor return line.

(iii) Records of dates and times when a leak is repaired.

(b) *Equipment leak records.* (1) A list of components as specified below in paragraphs (b)(1)(i) and (ii).

(i) For all affected sources, a list of components in diisocyanate service,

(ii) For affected sources complying with the emission point specific limitations of §§63.1294 through 63.1298, a list of components in HAP ABA service.

(2) For transfer pumps in diisocyanate service, a record of the type of control utilized for each transfer pump and the date of installation.

(3) When a leak is detected as specified in §63.1294(b)(2)(ii), §63.1294(c), §63.1296(a)(2), (b)(1), (c)(1), and (d)(1), the requirements listed in paragraphs (b)(3)(i) and (ii) of this section apply:

(i) Leaking equipment shall be identified in accordance with the requirements in paragraphs (b)(3)(i)(A) through (C) of this section.

(A) A readily visible identification, marked with the equipment identification number, shall be attached to the leaking equipment.

(B) The identification on a valve may be removed after it has been monitored for 2-successive quarters as specified in § 63.1296(b)(1) and no leak has been detected during those 2 quarters.

(C) The identification on equipment, other than a valve, may be removed after it has been repaired.

(ii) The information in paragraphs (b)(2)(ii)(A) through (H) shall be recorded for leaking components.

(A) The instrument and operator identification numbers and the equipment identification number.

(B) The date the leak was detected and the dates of each attempt to repair the leak.

(C) Repair methods applied in each attempt to repair the leak.

(D) The words ''above leak definition'' if the maximum instrument reading measured by the methods specified in § 63.1304(a) after each repair attempt is equal or greater than the leak definitions for the specified equipment.

(E) The words ''repair delayed'' and the reason for the delay if a leak is not repaired within 15 calendar days after discovery of the leak.

(F) The expected date of the successful repair of the leak if a leak is not repaired within 15 calendar days.

(G) The date of successful repair of the leak.

(H) The date the identification is removed.

(c) *HAP ABA records*—(1) *Emission point specific limitations—rolling annual compliance and monthly compliance alternative records.* Each slabstock affected source complying with the emission point specific limitations of §1A63.1294 through 63.1298, and the rolling annual compliance provisions of § 63.1297(a)(1), shall maintain the records listed in paragraphs (c)(1)(i), (ii), (iii), and (iv) of this section. Each flexible polyurethane foam slabstock source complying with the emission point specific limitations of §§ 63.1294 through 63.1298, and the monthly compliance alternative of § 63.1297(a)(2), shall maintain the records listed in paragraphs (c)(1)(i), (ii), and (iv) of this section.

(i) Daily records of the information listed below in paragraphs (c)(1)(i)(A) through (C) of this section.

(A) A log of foam runs each day. For each run, the log shall include a list of the grades produced during the run.

(B) Results of the density and IFD testing for each grade of foam produced during each run of foam, conducted in accordance with the procedures in § 63.1304(b). The results of this testing shall be recorded within 10 working days of the production of the foam. For grades of foam where the owner or operator has designated the HAP ABA formulation limitation as zero, the owner or operator is not required to keep records of the IFD and density.

(C) The amount of polyol added to the slabstock foam production line at the mixhead for each run of foam, determined in accordance with § 63.1303(b).

(ii) Monthly records of the information listed in paragraphs (c)(1)(ii)(A) through (E) of this section.

(A) A listing of all foam grades produced during the month,

(B) For each foam grade produced, the HAP ABA formulation limitation, calculated in accordance with § 63.1297(d).

(C) With the exception of those grades for which the owner or operator has designated zero as the HAP ABA formulation limitation, the total amount of polyol used in the month for each foam grade produced.

(D) The total allowable HAP ABA emissions for the month, determined in accordance with § 63.1297(b)(2).

(E) The total amount of HAP ABA added to the slabstock foam production line at the mixhead during the month, determined in accordance with § 63.1303(b).

(iii) Each source complying with the rolling annual compliance provisions of § 63.1297(b) shall maintain the records listed in paragraphs (c)(1)(iii)(A) and (B) of this section.

(A) The sum of the total allowable HAP ABA emissions for the month and the previous 11 months.

(B) The sum of the total actual HAP ABA emissions for the month and the previous 11 months.

(iv) Records of all calibrations for each device used to measure polyol and HAP ABA added at the mixhead, conducted in accordance with § 63.1303(b)(3).

(2) *Source-wide limitations—rolling annual compliance and monthly compliance alternative records.* Each slabstock affected source complying with the source-wide limitations of § 63.1299, and the rolling annual compliance provisions in § 63.1299(a), shall maintain the records listed in paragraphs (c)(2)(i) through (c)(2)(vii) of this section. Each flexible polyurethane foam slabstock source complying with the source-wide limitations of § 63.1299, and the monthly compliance alternative of § 63.1299(b), shall maintain the records listed in paragraphs (c)(2)(i) through (c)(2)(iii) and paragraphs (c)(2)(v) through (c)(2)(vii) of this section.

(i) Daily records of the information listed in paragraphs (c)(2)(i)(A) through (C) of this section.

(A) A log of foam runs each day. For each run, the log shall include a list of the grades produced during the run.

(B) Results of the density and IFD testing for each grade of foam produced during each run of foam, conducted in accordance with the procedures in § 63.1304(b). The results of this testing shall be recorded within 10 working days of the production of the foam. For grades of foam where the the owner or operator has designated the HAP ABA formulation limitation as zero, the owner or operator is not required to keep records of the IFD and density.

(C) With the exception of those grades for which the owner or operator has designated zero as the HAP ABA formulation limitation, the amount of polyol added to the slabstock foam production line at the mixhead for each grade produced during each run of foam, determined in accordance with § 63.1303(b).

(ii) For sources complying with the source-wide emission limitation, weekly records of the storage tank level, determined in accordance with § 63.1303(d).

(iii) Monthly records of the information listed below in paragraphs (c)(2)(iii)(A) through (E) of this section.

(A) A listing of all foam grades produced during the month,

(B) For each foam grade produced, the residual HAP formulation limitation, calculated in accordance with § 63.1297(d).

(C) With the exception of those grades for which the owner or operator has designated zero as the HAP ABA formulation limitation, the total amount of polyol used in the month for each foam grade produced.

(D) The total allowable HAP ABA and equipment cleaning emissions for the month, determined in accordance with § 63.1297(b)(2).

(E) The total actual source-wide HAP ABA emissions for the month, determined in accordance with § 63.1299(c)(1), along with the information listed in paragraphs (c)(2)(iii)(E)(*1*) and (*2*) of this section.

(*1*) The amounts of HAP ABA in the storage vessel at the beginning and end of the month, determined in accordance with § 63.1299(c)(2); and

(*2*) The amount of each delivery of HAP ABA to the storage vessel, determined in accordance with § 63.1299(c)(3).

(iv) Each source complying with the rolling annual compliance provisions of § 63.1299(a) shall maintain the records listed in paragraphs (c)(2)(iv)(A) and (B) of this section.

(A) The sum of the total allowable HAP ABA and equipment cleaning HAP emissions for the month and the previous 11 months.

(B) The sum of the total actual HAP ABA and equipment cleaning HAP emissions for the month and the previous 11 months.

(v) Records of all calibrations for each device used to measure polyol added at the mixhead, conducted in accordance with § 63.1303(b)(3).

(vi) Records of all calibrations for each device used to measure the amount of HAP ABA in the storage vessel, conducted in accordance with § 63.1303(d)(1).

(vii) Records to verify that all scales used to measure the amount of HAP ABA added to the storage vessel meet the requirements of § 63.1303(e)(3). For scales meeting the criteria of § 63.1303(e)(3)(i), this documentation shall be in the form of written confirmation of the State or local approval. For scales complying with § 63.1303(e)(3)(ii), this documentation shall be in the form of a report provided by the registered scale technician.

(d) The owner or operator of each affected source complying with § 63.1297 or § 63.1299 through the use of a recovery device shall maintain the following records:

(1) A copy of the recovered HAP ABA monitoring and recordkeeping program, developed pursuant to § 63.1303(c);

(2) Certification of the accuracy of the monitoring device,

(3) Records of periodic calibration of the monitoring devices,

(4) Records of parameter monitoring results, and

(5) The amount of HAP ABA recovered each time it is measured.

(e) The owner or operator of an affected source subject to § 63.1298 of this subpart shall maintain a product data sheet for each equipment cleaner used which includes the HAP content, in kg of HAP/kg solids (lb HAP/lb solids).

(f) The owner or operator of an affected source following the compliance methods in § 63.1308(b)(1) and (c)(1) shall maintain records of each use of a vapor return line during unloading, of any leaks detected during unloading, and of repairs of leaks detected during unloading.

(g) The owner or operator of an affected source subject to § 63.1300 or § 63.1301 of this subpart shall maintain a product data sheet for each compound other than diisocyanates used to flush the mixhead and associated piping during periods of startup or maintenance, which includes the HAP content, in kg of HAP/kg solids (lb HAP/lb solids), of each solvent other than diisocyanates used to flush the mixhead and associated piping during periods of startup or maintenance.

(h) The owner or operator of an affected source subject to § 63.1300 or § 63.1301 of this subpart shall maintain a product data sheet for each mold release agent used that includes the HAP content, in kg of HAP/kg solids (lb HAP/lb solids), of each mold release agent.

§ 63.1308 Compliance demonstrations.

(a) For each affected source, compliance with the requirements listed in paragraphs (a)(1) through (a)(2) of this section shall mean compliance with the requirements contained in §§ 63.1293 through 63.1301, absent any credible evidence to the contrary.

(1) The requirements described in Tables 3, 4, and 5 of this subpart; and

(2) The requirement to submit a compliance certification annually as required under § 63.1306(g).

(b) *All slabstock affected sources.* For slabstock affected sources, failure to meet the requirements contained in § 63.1294 shall be considered a violation of this subpart. Violation of each item listed in the paragraphs (b)(1) through (b)(6) of this section, as applicable, shall be considered a separate violation.

(1) For each affected source complying with § 63.1294(a) in accordance with § 63.1294(a)(1), each unloading event that occurs when the diisocyanate storage vessel is not equipped with a vapor return line from the storage vessel to the tank truck or rail car, each unloading event that occurs when the vapor line is not connected, each unloading event that the vapor line is not inspected for leaks as described in § 63.1294(a)(1)(i), each unloading event that occurs after a leak has been detected and not repaired, and each calendar day after a leak is detected, but not repaired as soon as practicable;

(2) For each affected source complying with § 63.1294(a) in accordance with § 63.1294(a)(2), each unloading event that the diisocyanate storage vessel is not equipped with a carbon adsorption system, each unloading event (or each month if more than one unloading event occurs in a month) that the carbon adsorption system is not monitored for breakthrough in accordance with § 63.1303(a)(3) or (4), and each unloading event that occurs when the carbon is not replaced after an indication of breakthrough;

(3) For each affected source complying with § 63.1294(a) in accordance with § 63.1294(a)(2) through the alternative monitoring procedures in § 63.1303(a)(2), each unloading event that the diisocyanate storage vessel is not equipped with a carbon adsorption system, each time that the carbon adsorption system is not monitored for breakthrough in accordance with § 63.1303(a)(3) or (4) at the interval established in the design analysis, and

each unloading event that occurs when the carbon is not replaced after an indication of breakthrough;

(4) For each affected source complying with §63.1294(b) in accordance with §63.1294(b)(1), each calendar day that a transfer pump in diisocyanate service is not a sealless pump;

(5) For each affected source complying with §63.1294(b) in accordance with §63.1294(b)(2), each calendar day that a transfer pump in diisocyanate service is not submerged as described in §63.1294(b)(2)(i), each week that the pump is not visually monitored for leaks, each calendar day after 5 calendar days after detection of a leak that a first attempt at repair has not been made in accordance with §63.1294(b)(2)(iii)(B), and the earlier of each calendar day after 15 calendar days after detection of a leak that a leak is not repaired, or a leak is not repaired as soon as practicable, each subsequent calender day (with the exception of situations meeting the criteria of §63.1294(d));

(6) For each affected source complying with §63.1294(c), each calendar day after 5 calendar days after detection of a leak that a first attempt at repair has not been made, and the earlier of each calendar day after 15 calendar days after detection of a leak that a leak is not repaired, or if a leak is not repaired as soon as practicable, each subsequent calender day (with the exception of situations meeting the criteria of §63.1296(f)).

(c) *Slabstock affected sources complying with the emission point specific limitations.* For slabstock affected sources complying with the emission point specific limitations as provided in §63.1293(a), failure to meet the requirements contained in §§63.1295 through 63.1298 shall be considered a violation of this subpart. Violation of each item listed in the paragraphs (c)(1) through (c)(17) of this section, as applicable, shall be considered a separate violation.

(1) For each affected source complying with §63.1295(a) in accordance with §63.1295(b), each unloading event that occurs when the HAP ABA storage vessel is not equipped with a vapor return line from the storage vessel to the tank truck or rail car, each unloading event that occurs when the vapor line is not connected, each unloading event that the vapor line is not inspected for leaks as described in §63.1295(b)(1), each unloading event that occurs after a leak has been detected and not repaired, and each calendar day after a leak is detected but not repaired as soon as practicable;

(2) For each affected source complying with §63.1295(a) in accordance with §63.1295(c), each unloading event that the HAP ABA storage vessel is not equipped with a carbon adsorption system, each unloading event (or each month if more than one unloading event occurs in a month) that the carbon adsorption system is not monitored for breakthrough in accordance with §63.1303(a)(3) or (4), and each unloading event that occurs when the carbon is not replaced after an indication of breakthrough ;

(3) For each affected source complying with §63.1295(a) in accordance with §63.1295(c) through the alternative monitoring procedures in §63.1303(a)(2), each unloading event that the HAP ABA storage vessel is not equipped with a carbon adsorption system, each time that the carbon adsorption system is not monitored for breakthrough in accordance with §63.1303(a)(3) or (4) at the interval established in the design analysis, and each unloading event that occurs when the carbon is not replaced after an indication of breakthrough;

(4) For each affected source complying with §63.1296(a) in accordance with §63.1296(a)(1), each calendar day that a transfer pump in HAP ABA service is not a sealless pump;

(5) For each affected source complying with §63.1296(a) in accordance with §63.1296(a)(2), each week that a visual inspection of a pump in HAP ABA service is not performed, each quarter that a pump in HAP ABA service is not monitored to detect leaks in accordance with §63.1304(a), each calendar day after 5 calendar days after detection of a leak that a first attempt at repair has not been made in accordance with §63.1296(b)(2)(iii)(B), and the earlier of each calendar day after 15 calendar days after detection of a leak that a leak is not repaired, or if a leak is not repaired as soon as practicable,

each subsequent calender day (with the exception of situations meeting the criteria of § 63.1296(f));

(6) For each affected source complying with § 63.1296(b) in accordance with § 63.1296(b)(1) and (2), each quarter that a valve in HAP ABA service is not monitored to detect leaks in accordance with § 63.1304(a), each calendar day after 5 calendar days after detection of a leak that a first attempt at repair has not been made in accordance with § 63.1296(b)(2)(ii), and each calendar day after 15 calendar days after detection of a leak that a leak is not repaired, or if a leak is not repaired as soon as practicable, whichever is earlier (with the exception of situations meeting the criteria of § 63.1296(f));

(7) For each affected source complying with § 63.1296(b)(3) for each valve designated as unsafe to monitor as described in § 63.1296(b)(3)(i), failure to develop the written plan required by § 63.1296(b)(3)(ii), each period specified in the written plan that an unsafe-to-monitor valve in HAP ABA service is not monitored, and each calendar day in which a leak is not repaired in accordance with the written plan;

(8) For each affected source complying with § 63.1296(b)(4) for one or more valves designated as difficult-to-monitor in accordance with § 63.1296(b)(4)(i) and (ii), failure to develop the written plan required by § 63.1296(b)(4)(iii), each calendar year that a difficult-to-monitor valve in HAP ABA service is not monitored, and each calendar day in which a leak is not repaired in accordance with the written plan;

(9) For each affected source complying with § 63.1296(c) in accordance with § 63.1296(c)(1) and (2), each year that a connector in HAP ABA service is not monitored to detect leaks in accordance with § 63.1304(a); each calendar day after 3 months after a connector has been opened, has otherwise had the seal broken, or a leak is repaired, that each connector in HAP ABA service is not monitored to detect leaks in accordance with § 63.1304(a); each calendar day after 5 calendar days after detection of a leak that a first attempt at repair has not been made, and the earlier of each calendar day after 15 calendar days after detection of a leak that a leak is not repaired, or if a leak is not repaired as soon as practicable, each subsequent calendar day (with the exception of situations meeting the criteria of § 63.1296(f));

(10) For each affected source complying with § 63.1296(c)(3) for one or more connectors designated as unsafe-to-monitor in accordance with § 63.1296(c)(3)(i), failure to develop the written plan required by § 63.1296(c)(3)(ii), each period specified in the written plan that an unsafe-to-monitor valve in HAP ABA service is not monitored, each calendar day after 5 calendar days after detection of a leak of an unsafe-to-monitor connector that a first attempt at repair has not been made, and the earlier of each calendar day after 15 calendar days after detection of a leak that a leak is not repaired, or if a leak is not repaired as soon as practicable, each subsequent calender day (with the exception of situations meeting the criteria of § 63.1296(f));

(11) For each affected source complying with § 63.1296(c)(4) for one or more connectors designated as unsafe to repair, each year that one or more unsafe-to-repair connectors in HAP ABA service is not monitored to detect leaks in accordance with § 63.1304(a); each calendar day after 3 months after one or more unsafe-to-repair connectors has been opened, has otherwise had the seal broken, or a leak is repaired, that each unsafe-to-repair connector in HAP ABA service is not monitored to detect leaks in accordance with § 63.1304(a); and the earlier of each calendar day after six-months after detection of a leak that a leak is not repaired, or if a leak is not repaired as soon as practicable, each subsequent calendar day;

(12) For each affected source complying with § 63.1296(d) in accordance with § 63.1296(d)(1) and (2), each calendar day after the 5 days that the pressure-relief device has not been monitored in accordance with § 63.1304(a) after a potential leak was discovered as described in § 63.1296(d)(1), each calendar day after 5 calendar days after detection of a leak that a first attempt at repair has not been made, and the earlier of each calendar day after 15 calendar days after detection of a leak

that a leak is not repaired, or if a leak is detected and not repaired as soon as practicable, each subsequent calendar day (with the exception of situations meeting the criteria of §63.1296(f));

(13) For each affected source complying with §63.1296(e) in accordance with §63.1296(e)(1) through (5), each calendar day that an open-ended valve or line has no cap, blind flange, plug or second valve as described in §63.1296(e)(2), and each calendar day that a valve on the process fluid end of an open-ended valve or line equipped with a second valve is not closed before the second valve is closed;

(14) For each affected source complying with §63.1297(a) in accordance with the rolling annual compliance option in §63.1297(a)(1) and (b), each calendar day in the 12-month period for which the actual HAP ABA emissions exceeded the allowable HAP ABA emissions level, each calendar day in which foam is being poured where the amount of polyol added at the mixhead is not monitored (as required) in accordance with §63.1303(b)(1)(i), each calendar day in which foam is being poured where the amount of HAP ABA added at the mixhead is not monitored (as required) in accordance with §63.1303(b)(1)(ii), each calendar day in a 6-month period in which the polyol pumps are not calibrated in accordance with §63.1303(b)(3)(i), each calendar day in a month in which the HAP ABA pumps are not calibrated in accordance with §63.1303(b)(3)(ii), and each calendar day after 10 working days after production where the IFD and density of a foam grade are not determined (where required) in accordance with §63.1304(b);

(15) For each affected source complying with §63.1297(a) in accordance with the monthly compliance option in §63.1297(a)(2) and (c), each calendar day of each month for which the actual HAP ABA emissions exceeded the allowable HAP ABA emissions level for that month, each calendar day in which foam is being poured where the amount of polyol added at the mixhead is not monitored (as required) in accordance with §63.1303(b)(1)(i), each calendar day in which foam is being poured where the amount of HAP ABA added at the mixhead is not monitored (as required) in accordance with §63.1303(b)(1)(ii), each 6-month period in which the polyol pumps are not calibrated in accordance with §63.1303(b)(3)(i), each month in which the HAP ABA pumps are not calibrated in accordance with §63.1303(b)(3)(ii), and each calendar day after 10 working days after production where the IFD and density of a foam grade are not determined (where required) in accordance with §63.1304(b);

(16) For each affected source complying with §63.1297(a) by using a recovery device as allowed under §63.1297(e), the items listed in (c)(16)(i) or (ii) of this section, as applicable.

(i) If complying with rolling annual compliance option in §63.1297(a)(1) and (b), each item listed in (c)(14) of this section, failure to develop a recovered HAP ABA monitoring and recordkeeping program in accordance with §63.1303(c), and each instance when an element of the program is not followed.

(ii) If complying with the monthly compliance option in §63.1297(a)(2) and (c), each item listed in (c)(15) of this section, failure to develop a recovered HAP ABA monitoring and recordkeeping program in accordance with §63.1303(c), and each instance when an element of the program is not followed.

(17) For each affected source complying with §63.1298, each calendar day that a HAP or any HAP-based material is used as an equipment cleaner.

(d) *Slabstock affected sources complying with the source-wide emission limitation.* For slabstock affected sources complying with the source-wide emission limitation as provided in §63.1293(b), failure to meet the requirements contained in §63.1299 shall be considered a violation of this subpart. Violation of each item listed in the paragraphs (d)(1) through (d)(3) of this section, as applicable, shall be considered a separate violation.

(1) For each affected source complying with §63.1299 in accordance with the rolling annual compliance option in §63.1299(a), each calendar day in the 12-month period for which the actual HAP ABA emissions exceeded the allowable HAP ABA emissions level, each calendar day in which foam is being poured where the amount of polyol added at the mixhead is not monitored (as required) in accordance with

§ 63.1303(b)(1)(i), each calendar day in a week in which the amount of HAP ABA in a storage vessel is not determined in accordance with § 63.1303(d), each delivery of HAP ABA in which the amount of HAP ABA added to the storage vessel is not determined in accordance with § 63.1303(e), each calendar day in a 6-month period in which the polyol pumps are not calibrated in accordance with § 63.1303(b)(3)(i), and each calendar day after 10 working days after production where the IFD and density of a foam grade are not determined (where required) in accordance with § 63.1304(b);

(2) For each affected source complying with § 63.1299 in accordance with the monthly compliance option in § 63.1299(b), each calendar day of each month for which the actual HAP ABA emissions exceeded the allowable HAP ABA emissions level for that month, each calendar day in which foam is being poured where the amount of polyol added at the mixhead is not monitored (as required) in accordance with § 63.1303(b)(1)(i), each calendar day in a week in which the amount of HAP ABA in a storage vessel is not determined in accordance with § 63.1303(d), each delivery of HAP ABA in which the amount of HAP ABA added to the storage vessel is not determined in accordance with § 63.1303(e), and each calendar day in a 6-month period in which the polyol pumps are not calibrated in accordance with § 63.1303(b)(3)(i), and each calendar day after 10 working days after production where the IFD and density of a foam grade are not determined (where required) in accordance with § 63.1304(b).

(3) For each affected source complying with § 63.1299 by using a recovery device as allowed under § 63.1299(e), the items listed in (d)(3)(i) or (ii) of this section, as applicable.

(i) If complying with rolling annual compliance option in § 63.1299(a), each item listed in (d)(1) of this section, failure to develop a recovered HAP ABA monitoring and recordkeeping program in accordance with § 63.1303(c), and each instance when an element of the program is not followed.

(ii) If complying with the monthly compliance option in § 63.1299(b), each item listed in (d)(2) of this section, failure to develop a recovered HAP ABA monitoring and recordkeeping program in accordance with § 63.1303(c), and each instance when an element of the program is not followed.

(e) *Molded and rebond foam affected sources.* For molded and rebond foam affected sources, failure to meet the requirements contained in § 63.1300 and § 63.1301, respectively, shall be considered a violation of this subpart. Violation of each item listed in the following paragraphs shall be considered a separate violation.

(1) For each molded foam affected source subject to the provisions in § 63.1300(a), each calendar day that a HAP-based material is used as an equipment cleaner (except for diisocyanates used to flush the mixhead and associated piping during periods of startup or maintenance, provided that the diisocyanate compounds are contained in a closed-loop system and are re-used in production);

(2) For each molded foam affected source subject to the provisions of § 63.1300(b), each calendar day that a HAP-base material is used as a mold release agent;

(3) For each rebond foam affected source subject to the provisions of § 63.1301(a), each calendar day that a HAP-based material is used as an equipment cleaner; and

(4) For each rebond foam affected source complying with § 63.1301(b), each calendar day that a HAP-based mold release agent is used.

§ 63.1309 Delegation of authority.

(a) In delegating implementation and enforcement authority to a State under § 112(d) of the Clean Air Act, the authorities contained in paragraph (b) of this section shall be retained by the Administrator and not transferred to a State.

(b) The authority conferred in § 63.1303(b)(5) and § 63.1305(d) shall not be delegated to any State.

APPENDIX TO SUBPART III OF PART 63—TABLES

For the convenience of the readers of subpart III, the tables below summarize the requirements in §§ 63.1290 to 63.1307. These tables are intended to assist the reader in determining the requirements applicable to affected sources and do not alter an affected source's obligation to comply with the requirements in §§ 63.1290 to 63.1307.

TABLE 1 TO SUBPART III OF PART 63—HAP ABA FORMULATION LIMITATIONS MATRIX FOR NEW SOURCES [SEE § 63.1297(D)(2)]

Values in parts ABA per hundred parts polyol		Density ranges (pounds per cubic foot)				
		0-0.95	0.96-1.05	1.06-1.15	1.16-1.40	1.41+
IFD	0-10	Use Equation 3				
	11-15					
	16-20			0		
	21-25					
	26-30					
	31+					

TABLE 2 TO SUBPART III OF PART 63—APPLICABILITY OF GENERAL PROVISIONS (40 CFR PART 63, SUBPART A) TO SUBPART III

Subpart A reference	Applies to subpart III	Comment
§ 63.1	YES	Except that § 63.1(c)(2) is not applicable to the extent area sources are not subject to subpart III.
§ 63.2	YES	Definitions are modified and supplemented by § 63.1292.
§ 63.3	YES	
§ 63.4	YES	
§ 63.5	YES	
§ 63.6 (a)–(d)	YES	
§ 63.6(e) (1)–(2)	YES	
§ 63.6(e)(3)	NO	Owners and operators of subpart III affected sources are not required to develop and implement a startup, shutdown, and malfunction plan.
§ 63.6 (f)–(g)	YES	
§ 63.6(h)	NO	Subpart III does not require opacity and visible emission standards.

Subpart A reference	Applies to subpart III	Comment
§ 63.6 (i)–(j)	YES	
§ 63.7	NO	Performance tests not required by subpart III.
§ 63.8	NO	Continuous monitoring, as defined in subpart A, is not required by subpart III.
§ 63.9 (a)–(d)	YES	
§ 63.9 (e)–(g)	NO	
§ 63.9(h)	NO	Subpart III specifies Notification of Compliance Status requirements.
§ 63.9 (i)–(j)	YES	
§ 63.10 (a)–(b)	YES	Except that the records specified in § 63.10(b)(2)(vi) through (xi) and (xiii) are not required.
§ 63.10(c)	NO	
§ 63.10(d)(1)	YES	
§ 63.10 (d) (2)–(3)	NO	
§ 63.10 (d) (4)–(5)	YES	
§ 63.10(e)	NO	
§ 63.10(f)	YES	
§ 63.11	YES	
§ 63.12	YES	
§ 63.13	YES	
§ 63.14	YES	
§ 63.15	YES	

TABLE 3 TO SUBPART III OF PART 63—COMPLIANCE REQUIREMENTS FOR SLABSTOCK FOAM PRODUCTION AFFECTED SOURCES COMPLYING WITH THE EMISSION POINT SPECIFIC LIMITATIONS

Emission point	Emission point compliance option	Emission, work practice, and equipment standards	Monitoring	Recordkeeping	Reporting
Diisocyanate storage vessels § 63.1294(a)	Vapor balance	§ 63.1294(a)(1) and (1)(ii).	§ 63.1294(a)(1)(i)	§ 63.1307(a)(1) and (4).	§ 63.1306(e)(5).
	Carbon adsorber	§ 63.1294(a)(2)	§ 63.1303(a)(1), (3), and (4).	§ 63.1307(a)(1), (3)(i), and (3)(iii).	§ 63.1306(e)(3).
	Carbon adsorber—alternative monitoring.	§ 63.1294(a)(2)	§ 63.1303(a)(2), (3) and (4).	§ 63.1307(a)(1), (3)(ii), and (3)(iii).	§ 63.1306(e)(3).
Diisocyanate transfer pumps § 63.1294(b)	Sealless pump	§ 63.1294(b)(1)		§ 63.1307 (b)(1)(i) and (2).	
	Submerged pump	§ 63.1294(b)(2)(i) and (iii).	§ 63.1294 (b)(2)(ii)	§ 63.1307 (b)(1)(i), (2), and (3).	§ 63.1306(e)(4).
Other components in diisocyanate service § 63.1294(c).	N/A	§ 63.1294(c)	§ 63.1294(c)	§ 63.1307 (b)(1)(i) and (3).	§ 63.1306(e)(4).
HAP ABA storage vessels § 63.1295	Vapor balance	§ 63.1295(b) and (b)(2).	§ 63.1295 (b)(1)	§ 63.1307(a)(2) and (4).	§ 63.1306(e)(5).
	Carbon adsorber	§ 63.1295(c)	§ 63.1303(a)(1), (3), and (4).	§ 63.1307(a)(2), (3)(i), (3)(iii).	§ 63.1306(e)(3).
	Carbon adsorber—alternative monitoring.	§ 63.1295(c)	§ 63.1303(a)(2), (3) and (4).	§ 63.1307(a)(2), (3)(ii), and (3)(iii).	§ 63.1306(e)(3).
HAP ABA pumps § 63.1296(a):	Sealless pump	§ 63.1296(a)(1)		§ 63.1307 (b)(1)(ii)	
	Quarterly monitoring.	§ 63.1296(a)(2) and (2)(iii).	§ 63.1296(a)(2)(i), (2)(ii) and § 63.1304(a).	§ 63.1307 (b)(1)(ii) and (3).	§ 63.1304(e)(4).
HAP ABA valves § 63.1296(b):	Quarterly monitoring.	§ 63.1296(b), and (b)(2).	§ 63.1296 (b)(1) and § 63.1304(a).	§ 63.1307 (b)(1)(ii) and (3).	§ 63.1304(e)(4).
	Unsafe-to-monitor	§ 63.1296(b)(3) (i), (ii), and (iv).	§ 63.1296 (b)(3)(iii)	§ 63.1307 (b)(1)(ii), and (4).	§ 63.1304(e)(4).
	Difficult-to-monitor	§ 63.1296(b)(4) (i), (ii), (iii), and (v).	§ 63.1296(b)(4)(iv) and § 63.1304(a).	§ 63.1307 (b)(1)(ii) and (4).	§ 63.1306(e)(4).
HAP ABA Connectors § 63.1296(c):	Annual monitoring	§ 63.1296(c) and (c)(2).	§ 63.1296(c)(1) and § 63.1304(a).	§ 63.1307 (b)(1)(ii) and (3).	§ 63.1306(e)(4).

Emission point	Emission point compliance option	Emission, work practice, and equipment standards	Monitoring	Recordkeeping	Reporting
	Unsafe-to-monitor	§ 63.1296(c)(2), (3)(i), and (ii).	§ 63.1296(c)(3) (iii) and § 63.1304(a).	§ 63.1307 (b)(1)(ii) and (4).	§ 63.1306(e)(4).
	Unsafe-to-repair	§ 63.1296(c)(4)	§ 63.1296(c)(1)	§ 63.1307 (b)(1)(ii)	§ 63.1306(e)(4).
Pressure-relief devices § 63.1296(d)	N/A	§ 63.1296(d) and (d)(2).	§ 63.1296 (d)(1) and § 63.1304(a).	§ 63.1307 (b)(1)(ii) and (3).	§ 63.1306(e)(4).
Open-ended valves or lines § 63.1296(e).	N/A	§ 63.1296(e)		§ 63.1307 (b)(1)(ii)	
Production line § 63.1297.	Rolling annual compliance.	§ 63.1297(a)(1) and (b).	§ 63.1303 (b)	§ 63.1307(c)(1)	§ 63.1306(e)(1).
	Monthly compliance.	§ 63.1297(a)(2) and (c).	§ 63.1303 (b)	§ 63.1307(c)(1)	§ 63.1306(e)(2).
	Compliance Using a Recovery device.	§ 63.1297(a)(1), (b), and (e) for rolling annual compliance or § 63.1297(a)(2), (c), and (e) for monthly compliance.	§ 63.1303 (b) and (c).	§ 63.1307(c)(1) and (d).	§ 63.1306(e)(1) or (2).
Equipment Cleaning § 63.1298.	N/A	§ 63.1298		§ 63.1307(e)	

TABLE 4 TO SUBPART III OF PART 63—COMPLIANCE REQUIREMENTS FOR SLABSTOCK FOAM PRODUCTION AFFECTED SOURCES COMPLYING WITH THE SOURCE-WIDE EMISSION LIMITATION

Emission point	Emission point compliance option	Emission, work practice, and equipment standards	Monitoring	Recordkeeping	Reporting
Diisocyanate storage vessels § 63.1294(a).	Vapor balance	§ 63.1294(a)(1) and (1)(ii).	§ 63.1294(a)(1)(i)	§ 63.1307(a)(1) and (4).	§ 63.1306(e)(5).
	Carbon adsorber	§ 63.1294(a)(2)	§ 63.1303(a)(1), (3), and (4).	§ 63.1307(a)(1), (3)(i), and (3)(iii).	§ 63.1306(e)(3).
	Carbon adsorber—alternative monitoring.	§ 63.1294(a)(2)	§ 63.1303(a)(2), (3) and (4).	§ 63.1307(a)(1), (3)(ii), and (3)(iii).	§ 63.1306(e)(3).
Diisocyanate transfer pumps § 63.1294(b).	Sealless pump	§ 63.1294(b)(1)		§ 63.1307 (b)(1)(i) and (2).	
	Submerged pump	§ 63.1294(b)(2)(i) and (iii).	§ 63.1294 (b)(2)(ii)	§ 63.1307 (b)(1)(i), (2), and (3).	§ 63.1306(e)(4).
Other components in diisocyanate service § 63.1294(c).	N/A	§ 63.1294(c)	§ 63.1294(c)	§ 63.1307 (b)(1)(i) and (3).	§ 63.1306(e)(4).
HAP ABA storage vessels, equipment leaks, production line, and equipment cleaning.	Rolling annual compliance.	§ 63.1299(a), (c)(1) through (4), and (d).	§ 63.1303 (b) except (b)(1)(ii), (d), and (e).	§ 63.1307(c)(2)	§ 63.1306(e)(1).
	Monthly compliance.	§ 63.1299(b), (c)(1) through (4), and (d).	§ 63.1303 (b) except (b)(1)(ii), (d), and (e).	§ 63.1307(c)(2)	§ 63.1306(e)(2).
	Compliance Using a Recovery device.	§ 63.1299(a), (d), and (e) for rolling annual compliance or § 63.1299(b), (d), and (e) for monthly compliance.	§ 63.1303 (b) except (b)(1)(ii) and (c).	§ 63.1307(c)(2) and (d).	§ 63.1306(e)(1) or (2).

TABLE 5 TO SUBPART III OF PART 63—COMPLIANCE REQUIREMENTS FOR MOLDED AND REBOND FOAM PRODUCTION AFFECTED SOURCES

Emission point	Emission point compliance option	Emission, work practice, and equipment standards	Monitoring	Recordkeeping	Reporting
Molded Foam					
Equipment cleaning	N/A	§ 63.1300(a)		§ 63.1307(g)	
Mold release agent	N/A	§ 63.1300(b)		§ 63.1307 (h)	
Rebond Foam					
Equipment cleaning	N/A	§ 63.1301(a)		§ 63.1307 (g)	
Mold release agent	N/A	§ 63.1301(b)		§ 63.1307 (h)	

Subpart JJJ—National Emission Standards for Hazardous Air Pollutant Emissions: Group IV Polymers and Resins

SOURCE: 61 FR 48229, Sept. 12, 1996, unless otherwise noted.

§ 63.1310 Applicability and designation of affected sources.

(a) *Definition of affected source.* The provisions of this subpart apply to each affected source. Affected sources are described in paragraphs (a)(1) through (a)(4) of this section.

(1) An affected source is either an existing affected source or a new affected source. Existing affected source is defined in paragraph (a)(2) of this section, and new affected source is defined in paragraph (a)(3) of this section.

(2) An existing affected source is defined as each group of one or more thermoplastic product process units (TPPU) and associated equipment, as listed in paragraph (a)(4) of this section that is not part of a new affected source, as defined in paragraph (a)(3) of this section, that is manufacturing the same primary product, and that is located at a plant site that is a major source.

(3) A new affected source is defined by the criteria in paragraph (a)(3)(i), (a)(3)(ii), or (a)(3)(iii) of this section. The situation described in paragraph (a)(3)(i) of this section is distinct from those situations described in paragraphs (a)(3)(ii) and (a)(3)(iii) of this section and from any situation described in paragraph (i) of this section.

(i) At a site without HAP emission points before March 29, 1995 (*i.e.*, a ''greenfield'' site), each group of one or more TPPU and associated equipment, as listed in paragraph (a)(4) of this section, that is manufacturing the same primary product and that is part of a major source on which construction commenced after March 29, 1995;

(ii) A group of one or more TPPU meeting the criteria in paragraph (i)(1)(i) of this section; or

(iii) A reconstructed affected source meeting the criteria in paragraph (i)(2)(i) of this section.

(4) *Emission points and equipment.* The affected source also includes the emission points and equipment specified in paragraphs (a)(4)(i) through (a)(4)(vi) of this section that are associated with each applicable group of one or more TPPU constituting an affected source.

(i) Each waste management unit.

(ii) Maintenance wastewater.

(iii) Each heat exchange system.

(iv) Each process contact cooling tower used in the manufacture of PET that is associated with a new affected source.

(v) Each process contact cooling tower used in the manufacture of PET using a continuous terephthalic acid high viscosity multiple end finisher process that is associated with an existing affected source.

(vi) Equipment required by, or utilized as a method of compliance with, this subpart which may include control devices and recovery devices.

(5) TPPUs and associated equipment, as listed in paragraph (a)(4) of this section, that are located at plant sites that are not major sources are neither affected sources nor part of an affected source.

(b) *TPPUs without organic HAP.* The owner or operator of a TPPU that is part of an affected source, as defined in paragraph (a) of this section, but that

does not use or manufacture any organic HAP shall comply with the requirements of either paragraph (b)(1) or (b)(2) of this section. Such a TPPU is not subject to any other provisions of this subpart and is not required to comply with the provisions of subpart A of this part.

(1) Retain information, data, and analyses used to document the basis for the determination that the TPPU does not use or manufacture any organic HAP. Types of information that could document this determination include, but are not limited to, records of chemicals purchased for the process, analyses of process stream composition, engineering calculations, or process knowledge.

(2) When requested by the Administrator, demonstrate that the TPPU does not use or manufacture any organic HAP.

(c) *Emission points not subject to the provisions of this subpart.* The affected source includes the emission points listed in paragraphs (c)(1) through (c)(9) of this section, but these emission points are not subject to the requirements of this subpart or to the provisions of subpart A of this part.

(1) Equipment that does not contain organic HAP and is located within a TPPU that is part of an affected source;

(2) Stormwater from segregated sewers;

(3) Water from fire-fighting and deluge systems in segregated sewers;

(4) Spills;

(5) Water from safety showers;

(6) Water from testing of deluge systems;

(7) Water from testing of firefighting systems;

(8) Vessels and equipment storing and/or handling material that contain no organic HAP and/or organic HAP as impurities only; and

(9) Equipment that is intended to operate in organic HAP service for less than 300 hours during the calendar year.

(d) *Processes exempted from the affected source.* The processes specified in paragraphs (d)(1) through (d)(5) of this section are exempted from the affected source:

(1) Research and development facilities;

(2) Polymerization processes occurring in a mold;

(3) Processes which manufacture binder systems containing a thermoplastic product for paints, coatings, or adhesives;

(4) Finishing processes including equipment such as compounding units, spinning units, drawing units, extruding units, and other finishing steps; and

(5) Solid state polymerization processes.

(e) *Applicability determination of non-thermoplastic equipment included within the boundaries of a TPPU.* If a polymer that is not a thermoplastic product is produced within the equipment (*i.e.*, collocated) making up a TPPU and at least 50 percent of that polymer is used in the production of a thermoplastic product manufactured by the same TPPU, then the unit operations involved in the production of that polymer are considered part of the TPPU and are subject to this subpart, with the following exception. Any emission points from such unit operations that are subject to another subpart of this part with an effective date prior to September 5, 1996 shall remain subject to that other subpart of this part and are not subject to this subpart.

(f) *Primary product determination and applicability.* An owner or operator of a process unit that produces or plans to produce a thermoplastic product shall determine if the process unit is subject to this subpart in accordance with this paragraph. The owner or operator shall initially determine whether a process unit is designated as a TPPU and subject to the provisions of this subpart in accordance with either paragraph (f)(1) or (f)(2) of this section. The owner or operator of a flexible operation unit that was not initially designated as a TPPU, but in which a thermoplastic product is produced, shall conduct an annual re-determination of the applicability of this subpart in accordance with paragraph (f)(3) of this section. Owners or operators that anticipate the production of a thermoplastic product in a process unit that was not initially designated as a TPPU, and in which no thermoplastic products are

currently produced, shall determine if the process unit is subject to this subpart in accordance with paragraph (f)(4) of this section. Paragraphs (f)(3) and (f)(5) through (f)(7) of this section discuss compliance only for flexible operation units. Other paragraphs apply to all process units, including flexible operation units, unless otherwise noted. Paragraph (f)(8) of this section contains reporting requirements associated with the applicability determinations. Paragraphs (f)(9) and (f)(10) of this section describe criteria for removing the TPPU designation from a process unit.

(1) *Initial determination.* The owner or operator shall initially determine if a process unit is subject to the provisions of this subpart based on the primary product of the process unit in accordance with paragraphs (f)(1)(i) through (iii) of this section. If the process unit never uses or manufactures any organic HAP, regardless of the outcome of the primary product determination, the only requirements of this subpart that might apply to the process unit are contained in paragraph (b) of this section. If a flexible operation unit does not use or manufacture any organic HAP during the manufacture of one or more products, paragraph (f)(5)(i) of this section applies to that flexible operation unit.

(i) If a process unit only manufactures one product, then that product shall represent the primary product of the process unit.

(ii) If a process unit produces more than one intended product at the same time, the primary product shall be determined in accordance with paragraph (f)(1)(ii)(A) or (B) of this section.

(A) The product for which the process unit has the greatest annual design capacity on a mass basis shall represent the primary product of the process unit, or

(B) If a process unit has the same maximum annual design capacity on a mass basis for two or more products, and if one of those products is a thermoplastic product, then the thermoplastic product shall represent the primary product of the process unit.

(iii) If a process unit is designed and operated as a flexible operation unit, the primary product shall be determined as specified in paragraphs (f)(1)(iii)(A) or (B) of this section based on the anticipated operations for the 5 years following September 12, 1996 at existing process units, or for the first year after the process unit begins production of any product for new process units. If operations cannot be anticipated sufficiently to allow the determination of the primary product for the specified period, applicability shall be determined (in accordance with paragraph (f)(2) of this section.

(A) If the flexible operation unit will manufacture one product for the greatest operating time over the specified 5 year period for existing process units, or the specified 1 year period for new process units, then that product shall represent the primary product of the flexible operation unit.

(B) If the flexible operation unit will manufacture multiple products equally based on operating time, then the product with the greatest expected production on a mass basis over the specified 5 year period for existing process units, or the specified 1 year period for new process units shall represent the primary product of the flexible operation unit.

(iv) If, according to paragraph (f)(1)(i), (ii), or (iii) of this section, the primary product of a process unit is a thermoplastic product, then that process unit shall be designated as a TPPU. That TPPU and associated equipment, as listed in paragraph (a)(4) of this section is either an affected source or part of an affected source comprised of other TPPU and associated equipment, as listed in paragraph (a)(4) of this section, subject to this subpart with the same primary product at the same plant site that is a major source. If the primary product of a process unit is determined to be a product that is not a thermoplastic product, then that process unit is not a TPPU.

(2) If the primary product cannot be determined for a flexible operation unit in accordance with paragraph (f)(1)(iii) of this section, applicability shall be determined in accordance with this paragraph.

(i) If the owner or operator cannot determine the primary product in accordance with paragraph (f)(1)(iii) of this section, but can determine that a

thermoplastic product is not the primary product, then that flexible operation unit is not a TPPU.

(ii) If the owner or operator cannot determine the primary product in accordance with paragraph (f)(1)(iii) of this section, and cannot determine that a thermoplastic product is not the primary product as specified in paragraph (f)(2)(i) of this section, applicability shall be determined in accordance with paragraph (f)(2)(ii)(A) or (f)(2)(ii)(B) of this section.

(A) If the flexible operation unit is an existing process unit, the flexible operation unit shall be designated as a TPPU if a thermoplastic product was produced for 5 percent or greater of the total operating time of the flexible operating unit since March 9, 1999. That TPPU and associated equipment, as listed in paragraph (a)(4) of this section, is either an affected source, or part of an affected source comprised of other TPPU and associated equipment, as listed in paragraph (a)(4) of this section, subject to this subpart with the same primary product at the same plant site that is a major source. For a flexible operation unit that is designated as an TPPU in accordance with this paragraph, the thermoplastic product produced for the greatest amount of time since March 9, 1999 shall be designated as the primary product of the TPPU.

(B) If the flexible operation unit is a new process unit, the flexible operation unit shall be designated as a TPPU if the owner or operator anticipates that a thermoplastic product will be manufactured in the flexible operation unit at any time in the first year after the date the unit begins production of any product. That TPPU and associated equipment, as listed in paragraph (a)(4) of this section, is either an affected source, or part of an affected source comprised of other TPPU and associated equipment, as listed in paragraph (a)(4) of this section, subject to this subpart with the same primary product at the same plant site that is a major source. For a process unit that is designated as a TPPU in accordance with this paragraph, the thermoplastic product that will be produced shall be designated as the primary product of the TPPU. If more than one thermoplastic product will be produced, the owner or operator may select which thermoplastic product is designated as the primary product.

(3) *Annual applicability determination for non-TPPUs that have produced a thermoplastic product.* Once per year beginning September 12, 2001, the owner or operator of each flexible operation unit that is not designated as a TPPU, but that has produced a thermoplastic product at any time in the preceding 5-year period or since the date that the unit began production of any product, whichever is shorter, shall perform the evaluation described in paragraphs (f)(3)(i) through (f)(3)(iii) of this section. However, an owner or operator that does not intend to produce any thermoplastic product in the future, in accordance with paragraph (f)(9) of this section, is not required to perform the evaluation described in paragraphs (f)(3)(i) through (f)(3)(iii) of this section.

(i) For each product produced in the flexible operation unit, the owner or operator shall calculate the percentage of total operating time over which the product was produced during the preceding 5-year period.

(ii) The owner or operator shall identify the primary product as the product with the highest percentage of total operating time for the preceding 5-year period.

(iii) If the primary product identified in paragraph (f)(3)(ii) is a thermoplastic product, the flexible operation unit shall be designated as a TPPU. The owner or operator shall notify the Administrator no later than 45 days after determining that the flexible operation unit is a TPPU, and shall comply with the requirements of this subpart in accordance with paragraph (i)(1) of this section for the flexible operation unit.

(4) *Applicability determination for non-TPPUs that have not produced a thermoplastic product.* The owner or operator that anticipates the production of a thermoplastic product in a process unit that is not designated as a TPPU, and in which no thermoplastic products have been produced in the previous 5-year period or since the date that the process unit began production of any

product, whichever is shorter, shall determine if the process unit is subject to this subpart in accordance with paragraphs (f)(4)(i) and (ii) of this section. Also, owners or operators who have notified the Administrator that a process unit is not a TPPU in accordance with paragraph (f)(9) of this section, that now anticipate the production of a thermoplastic product in the process unit, shall determine if the process unit is subject to this subpart in accordance with paragraphs (f)(4)(i) and (ii) of this section.

(i) The owner or operator shall use the procedures in paragraph (f)(1) or (f)(2) of this section to determine if the process unit is designated as a TPPU, with the following exception: For existing process units that are determining the primary product in accordance with paragraph (f)(1)(iii) of this section, production shall be projected for the five years following the date that the owner or operator anticipates initiating the production of a thermoplastic product.

(ii) If the unit is designated as a TPPU in accordance with paragraph (f)(4)(i) of this section, the owner or operator shall comply in accordance with paragraph (i)(1) of this section.

(5) *Compliance for flexible operation units.* Owners or operators of TPPUs that are flexible operation units shall comply with the standards specified for the primary product, with the exceptions provided in paragraphs (f)(5)(i) and (f)(5)(ii) of this section.

(i) Whenever a flexible operation unit manufactures a product in which no organic HAP is used or manufactured, the owner or operator is only required to comply with either paragraph (b)(1) or (b)(2) of this section to demonstrate compliance for activities associated with the manufacture of that product. This subpart does not require compliance with the provisions of subpart A of this part for activities associated with the manufacture of a product that meets the criteria of paragraph (b) of this section.

(ii) Whenever a flexible operation unit manufactures a product that makes it subject to subpart GGG of this part, the owner or operator is not required to comply with the provisions of this subpart during the production of that product.

(6) Owners or operators of TPPUs that are flexible operation units have the option of determining the group status of each emission point associated with the flexible operation unit, in accordance with either paragraph (f)(6)(i) or (f)(6)(ii) of this section, with the exception of batch process vents. For batch process vents, the owner or operator shall determine the group status in accordance with § 63.1323.

(i) The owner or operator may determine the group status of each emission point based on emission point characteristics when the primary product is being manufactured. The criteria that shall be used for this group determination are the Group 1 criteria specified for the primary product.

(ii) The owner or operator may determine the group status of each emission point separately for each product produced by the flexible operation unit. For each product, the group status shall be determined using the emission point characteristics when that product is being manufactured and using the Group 1 criteria specified for the primary product. (Note: Under this scenario, it is possible that the group status, and therefore the requirement to achieve emission reductions, for an emission point may change depending on the product being manufactured.)

(7) Owners or operators determining the group status of emission points in flexible operation units based solely on the primary product in accordance with paragraph (f)(6)(i) of this section shall establish parameter monitoring levels, as required, in accordance with either paragraph (f)(7)(i) or (f)(7)(ii) of this section. Owners or operators determining the group status of emission points in flexible operation units based on each product in accordance with paragraph (f)(6)(ii) of this section shall establish parameter monitoring levels, as required, in accordance with paragraph (f)(7)(i) of this section.

(i) Establish separate parameter monitoring levels in accordance with § 63.1334(a) for each individual product.

(ii) Establish a single parameter monitoring level (for each parameter

required to be monitored at each device subject to monitoring requirements) in accordance with §63.1334(a) that would apply for all products.

(8) *Reporting requirements.* When it is determined that a process unit is a TPPU and subject to the requirements of this subpart, the Notification of Compliance Status required by §63.1335(e)(5) shall include the information specified in paragraphs (f)(8)(i) and (f)(8)(ii) of this section, as applicable. If it is determined that the process unit is not subject to this subpart, the owner or operator shall either retain all information, data, and analysis used to document the basis for the determination that the primary product is not a thermoplastic product, or, when requested by the Administrator, demonstrate that the process unit is not subject to this subpart.

(i) If the TPPU manufactures only one thermoplastic product, identification of that thermoplastic product.

(ii) If the TPPU is designed and operated as a flexible operation unit, the information specified in paragraphs (f)(8)(ii)(A) through (f)(8)(ii)(D) of this section, as appropriate, shall be submitted.

(A) If a primary product could be determined, identification of the primary product.

(B) Identification of which compliance option, either paragraph (f)(6)(i) or (f)(6)(ii) of this section, has been selected by the owner or operator.

(C) If the option to establish separate parameter monitoring levels for each product in paragraph (f)(7)(i) of this section is selected, the identification of each product and the corresponding parameter monitoring level.

(D) If the option to establish a single parameter monitor level in paragraph (f)(7)(ii) of this section is selected, the parameter monitoring level for each parameter.

(9) *TPPUs terminating production of all thermoplastic products.* If a TPPU terminates the production of all thermoplastic products and does not anticipate the production of any thermoplastic products in the future, the process unit is no longer a TPPU and is not subject to this subpart after notification is made to the Administrator. This notification shall be accompanied by a rationale for why it is anticipated that no thermoplastic products will be produced in the process unit in the future.

(10) *Redetermination of applicability to TPPUs that are flexible operation units.* Whenever changes in production occur that could reasonably be expected to change the primary product of a TPPU that is operating as a flexible operation unit from a thermoplastic product to a product that would make the process unit subject to another subpart of this part, the owner or operator shall reevaluate the status of the process unit as a TPPU in accordance with paragraphs (f)(10)(i) through (iii) of this section.

(i) For each product produced in the flexible operation unit, the owner or operator shall calculate the percentage of total operating time in which the product was produced for the preceding five-year period, or since the date that the process unit began production of any product, whichever is shorter.

(ii) The owner or operator shall identify the primary product as the product with the highest percentage of total operating time for the period.

(iii) If the conditions in (f)(10)(iii)(A) through (C) of this section are met, the flexible operation unit shall no longer be designated as a TPPU and shall no longer be subject to the provisions of this subpart after the date that the process unit is required to be in compliance with the provisions of the other subpart of this part to which it is subject. If the conditions in paragraphs (f)(10)(iii)(A) through (C) of this section are not met, the flexible operation unit shall continue to be considered a TPPU and subject to the requirements of this subpart.

(A) The product identified in (f)(10)(ii) of this section is not a thermoplastic product; and

(B) The production of the product identified in (f)(10)(ii) of this section is subject to another subpart of this part; and

(C) The owner or operator submits a notification to the Administrator of the pending change in applicability.

(g) *Storage vessel ownership determination.* The owner or operator shall follow the procedures specified in paragraphs (g)(1) through (g)(7) of this section to

determine to which process unit a storage vessel shall be assigned. Paragraph (g)(8) of this section specifies when an owner or operator is required to redetermine to which process unit a storage vessel is assigned.

(1) If a storage vessel is already subject to another subpart of 40 CFR part 63 on September 12, 1996, said storage vessel shall be assigned to the process unit subject to the other subpart.

(2) If a storage vessel is dedicated to a single process unit, the storage vessel shall be assigned to that process unit.

(3) If a storage vessel is shared among process units, then the storage vessel shall be assigned to that process unit located on the same plant site as the storage vessel that has the greatest input into or output from the storage vessel (*i.e.*, said process unit has the predominant use of the storage vessel).

(4) If predominant use cannot be determined for a storage vessel that is shared among process units and if only one of those process units is a TPPU subject to this subpart, the storage vessel shall be assigned to said TPPU.

(5) If predominant use cannot be determined for a storage vessel that is shared among process units and if more than one of the process units are TPPUs that have different primary products and that are subject to this subpart, then the owner or operator shall assign the storage vessel to any one of the said TPPUs.

(6) If the predominant use of a storage vessel varies from year to year, then predominant use shall be determined based on the utilization that occurred during the year preceding September 12, 1996 or based on the expected utilization for the 5 years following September 12, 1996 for existing affected sources, whichever is more representative of the expected operations for said storage vessel, and based on the expected utilization for the first 5 years after initial start-up for new affected sources. The determination of predominant use shall be reported in the Notification of Compliance Status, as required by § 63.1335(e)(5)(vi).

(7) Where a storage vessel is located at a major source that includes one or more process units which place material into, or receive materials from the storage vessel, but the storage vessel is located in a tank farm (including a marine tank farm), the applicability of this subpart shall be determined according to the provisions in paragraphs (g)(7)(i) through (g)(7)(iv) of this section.

(i) The storage vessel may only be assigned to a process unit that utilizes the storage vessel and does not have an intervening storage vessel for that product (or raw material, as appropriate). With respect to any process unit, an intervening storage vessel means a storage vessel connected by hard-piping both to the process unit and to the storage vessel in the tank farm so that product or raw material entering or leaving the process unit flows into (or from) the intervening storage vessel and does not flow directly into (or from) the storage vessel in the tank farm.

(ii) If there is no process unit at the major source that meets the criteria of paragraph (g)(7)(i) of this section with respect to a storage vessel, this subpart does not apply to the storage vessel.

(iii) If there is only one process unit at the major source that meets the criteria of paragraph (g)(7)(i) of this section with respect to a storage vessel, the storage vessel shall be assigned to that process unit.

(iv) If there are two or more process units at the major source that meet the criteria of paragraph (g)(7)(i) of this section with respect to a storage vessel, the storage vessel shall be assigned to one of those process units according to the provisions of paragraphs (g)(3) through (g)(6) of this section. The predominant use shall be determined among only those process units that meet the criteria of paragraph (g)(7)(i) of this section.

(8) If the storage vessel begins receiving material from (or sending material to) a process unit that was not included in the initial determination, or ceases to receive material from (or send material to) a process unit, the owner or operator shall re-evaluate the applicability of this subpart to the storage vessel.

(h) *Recovery operations equipment ownership determination*. The owner or operator shall follow the procedures specified in paragraphs (h)(1) through (h)(6)

of this section to determine to which process unit recovery operations equipment shall be assigned. Paragraph (h)(7) of this section specifies when an owner or operator is required to redetermine to which process unit the recovery operations equipment is assigned.

(1) If recovery operations equipment is already subject to another subpart of 40 CFR part 63 on September 12, 1996, said recovery operations equipment shall be assigned to the process unit subject to the other subpart.

(2) If recovery operations equipment is dedicated to a single process unit, the recovery operations equipment shall be assigned to that process unit.

(3) If recovery operations equipment is shared among process units, then the recovery operations equipment shall be assigned to that process unit located on the same plant site as the recovery operations equipment that has the greatest input into or output from the recovery operations equipment (*i.e.*, said process unit has the predominant use of the recovery operations equipment).

(4) If predominant use cannot be determined for recovery operations equipment that is shared among process units and if one of those process units is a TPPU subject to this subpart, the recovery operations equipment shall be assigned to said TPPU.

(5) If predominant use cannot be determined for recovery operations equipment that is shared among process units and if more than one of the process units are TPPUs that have different primary products and that are subject to this subpart, then the owner or operator shall assign the recovery operations equipment to any one of said TPPUs.

(6) If the predominant use of recovery operations equipment varies from year to year, then predominant use shall be determined based on the utilization that occurred during the year preceding September 12, 1996 or based on the expected utilization for the 5 years following September 12, 1996 for existing affected sources, whichever is the more representative of the expected operations for said recovery operations equipment, and based on the first 5 years after initial start-up for new affected sources. The determination of predominant use shall be reported in the Notification of Compliance Status, as required by §63.1335(e)(5)(vii).

(7) If a piece of recovery operations equipment begins receiving material from a process unit that was not included in the initial determination, or ceases to receive material from a process unit that was included in the initial determination, the owner or operator shall reevaluate the applicability of this subpart to that recovery operations equipment.

(i) *Changes or additions to plant sites.* The provisions of paragraphs (i)(1) through (i)(4) of this section apply to owners or operators that change or add to their plant site or affected source. Paragraph (i)(5) of this section provides examples of what are and are not considered process changes for purposes of this paragraph (i) of this section. Paragraph (i)(6) of this section discusses reporting requirements.

(1) *Adding a TPPU to a plant site.* The provisions of paragraphs (i)(1)(i) and (i)(1)(ii) of this section apply to owners or operators that add one or more TPPUs to a plant site.

(i) If a group of one or more TPPUs that produce the same primary product is added to a plant site, the added group of one or more TPPUs and associated equipment, as listed in paragraph (a)(4) of this section, shall be a new affected source and shall comply with the requirements for a new affected source in this subpart upon initial start-up or by June 19, 2000, whichever is later, except that new affected sources whose primary product, as determined using the procedures specified in paragraph (f) of this section, is poly(ethylene terephthalate) (PET) shall be in compliance with §63.1331 upon initial start-up or February 27, 2001, whichever is later, if the added group of one or more TPPUs meets the criteria in either paragraph (i)(1)(i)(A) or (i)(1)(i)(B) of this section, and the criteria in either paragraph (i)(1)(i)(C) or (i)(1)(i)(D) of this section are met.

(A) The construction of the group of one or more TPPUs commenced after March 29, 1995.

(B) The construction or reconstruction, for process units that have become TPPUs, commenced after March 29, 1995.

(C) The group of one or more TPPUs and associated equipment, as listed in paragraph (a)(4) of this section, has the potential to emit 10 tons per year or more of any HAP or 25 tons per year or more of any combination of HAP, and the primary product of the group of one or more TPPUs is currently produced at the plant site as the primary product of an affected source; or

(D) The primary product of the group of one or more TPPUs is not currently produced at the plant site as the primary product of an affected source and the plant site meets, or after the addition of the group of one or more TPPUs and associated equipment, as listed in paragraph (a)(4) of this section, will meet the definition of a major source.

(ii) If a group of one or more TPPUs that produce the same primary product is added to a plant site, and the group of one or more TPPUs does not meet the criteria specified in paragraph (i)(1)(i) of this section, and the plant site meets, or after the addition will meet, the definition of a major source, the group of one or more TPPUs and associated equipment, as listed in paragraph (a)(4) of this section, shall comply with the requirements for an existing affected source in this subpart upon initial start-up; by June 19, 2001; or by 6 months after notifying the Administrator that a process unit has been designated as a TPPU (in accordance with paragraph (f)(3)(iii) of this section), whichever is later.

(2) *Adding emission points or making process changes to existing affected sources.* The provisions of paragraphs (i)(2)(i) through (i)(2)(ii) of this section apply to owners or operators that add emission points or make process changes to an existing affected source.

(i) If any components are replaced at an existing affected source such that the criteria specified in paragraphs (i)(2)(i)(A) through (i)(2)(i)(B) of this section are met, the entire affected source shall be a new affected source and shall comply with the requirements for a new affected source upon initial start-up or by June 19, 2000, whichever is later, as provided in § 63.6(b), except that new affected sources whose primary product is poly(ethylene terephthalate) (PET) shall be in compliance with § 63.1331 upon initial start-up or by February 27, 2001, whichever is later.

(A) The replacement of components meets the definition of reconstruction in § 63.1312(b); and

(B) Such reconstruction commenced after March 29, 1995.

(ii) If any components are replaced at an existing affected source such that the criteria specified in paragraphs (i)(2)(i)(A) through (i)(2)(i)(B) of this section are not met, and that replacement of components creates one or more Group 1 emission points (i.e., either newly created Group 1 emission points or emission points that change group status from Group 2 to Group 1) or causes any other emission point to be added (i.e., Group 2 emission points, equipment leak components subject to § 63.1331, continuous process vents subject to §§ 63.1316 through 63.1320, and heat exchange systems subject to § 63.1328), the resulting emission point(s) shall be subject to the applicable requirements for an existing affected source. The resulting emission points shall be in compliance by 120 days after the date of initial start-up or by the appropriate compliance date specified in § 63.1311 (i.e., February 27, 1998 for most equipment leak components subject to § 63.1331, and June 19, 2001 for most emission points other than equipment leaks), whichever is later.

(iii) If an addition or process change (not including a process change that solely replaces components) is made to an existing affected source that creates one or more Group 1 emission points (i.e., either newly created Group 1 emission points or emission points that change group status from Group 2 to Group 1) or causes any other emission point to be added (i.e., Group 2 emission points, equipment leak components subject to § 63.1331, continuous process vents subject to §§ 63.1316 through 63.1320, and heat exchange systems subject to § 63.1328), the resulting emission point(s) shall be subject to the applicable requirements for an existing affected source. The resulting

emission point(s) shall be in compliance by 120 days after the date of initial start-up or by the appropriate compliance date specified in §63.1311 (i.e., February 27, 1998 for most equipment leak components subject to §63.1331, and June 19, 2001 for most emission points other than equipment leaks), whichever is later.

(iv) If any process change (not including a process change that solely replaces components) is made to an existing affected source that results in baseline emissions (*i.e.*, emissions prior to applying controls for purposes of complying with this subpart) from continuous process vents in the collection of material recovery sections within the affected source at an existing affected source producing PET using a continuous dimethyl terephthalate process changing from less than or equal to 0.12 kg organic HAP per Mg of product to greater than 0.12 kg organic HAP per Mg of product, the continuous process vents shall be subject to the applicable requirements for an existing affected source. The resulting emission point(s) shall be in compliance by 120 days after the date of initial start-up or by June 19, 2001, whichever is later.

(3) *Existing affected source requirements for surge control vessels and bottoms receivers that become subject to subpart H requirements.* If a process change or addition of an emission point causes a surge control vessel or bottoms receiver to become subject to §63.170 under this paragraph (i), the owner or operator shall be in compliance upon initial start-up or by June 19, 2001, whichever is later.

(4) *Existing affected source requirements for compressors that become subject to the requirements of subpart H of this part.* If a process change or the addition of an emission point causes a compressor to become subject to §63.164 under this paragraph (i), the owner or operator shall be in compliance upon initial start-up or by the compliance date for that compressor as specified in §63.1311(d)(1) through (d)(4), whichever is later.

(5) *Determining what are and are not process changes.* For purposes of paragraph (i) of this section, examples of process changes include, but are not limited to, changes in feedstock type, or process catalyst type, or the replacement, removal, or addition of recovery equipment, or equipment changes that increase production capacity. For purposes of paragraph (i) of this section, process changes do not include: Process upsets, unintentional temporary process changes, and changes that do not alter the equipment configuration and operating conditions.

(6) *Reporting requirements for owners or operators that change or add to their plant site or affected source.* Owners or operators that change or add to their plant site or affected source, as discussed in paragraphs (i)(1) and (i)(2) of this section, shall submit a report as specified in §63.1335(e)(7)(iv).

(j) *Applicability of this subpart during periods of start-up, shutdown, malfunction, or non-operation.* Paragraphs (j)(1) through (j)(4) of this section shall be followed during periods of start-up, shutdown, malfunction, or non-operation of the affected source or any part thereof.

(1) The emission limitations set forth in this subpart and the emission limitations referred to in this subpart shall apply at all times except during periods of non-operation of the affected source (or specific portion thereof) resulting in cessation of the emissions to which this subpart applies. The emission limitations of this subpart and the emission limitations referred to in this subpart shall not apply during periods of start-up, shutdown, or malfunction, except as provided in paragraphs (j)(3) and (j)(4) of this section. During periods of start-up, shutdown, or malfunction, the owner or operator shall follow the applicable provisions of the start-up, shutdown, and malfunction plan required by §63.1335(b)(1). However, if a start-up, shutdown, malfunction, or period of non-operation of one portion of an affected source does not affect the ability of a particular emission point to comply with the emission limitations to which it is subject, then that emission point shall still be required to comply with the applicable emission limitations of this subpart during the start-up, shutdown, malfunction, or period of non-operation. For example, if there is an overpressure in the reactor area, a storage vessel that is part of

the affected source would still be required to be controlled in accordance with the emission limitations in § 63.1314. Similarly, the degassing of a storage vessel would not affect the ability of a batch process vent to meet the emission limitations of §§ 63.1321 through 63.1327.

(2) The emission limitations set forth in subpart H of this part, as referred to in § 63.1331, shall apply at all times except during periods of non-operation of the affected source (or specific portion thereof) in which the lines are drained and depressurized resulting in cessation of the emissions to which § 63.1331 applies, or during periods of start-up, shutdown, malfunction, or process unit shutdown (as defined in § 63.161).

(3) The owner or operator shall not shut down items of equipment that are required or utilized for compliance with this subpart during periods of start-up, shutdown, or malfunction during times when emissions (or, where applicable, wastewater streams or residuals) are being routed to such items of equipment, if the shutdown would contravene requirements of this subpart applicable to such items of equipment. This paragraph (j)(3) does not apply if the item of equipment is malfunctioning. This paragraph also does not apply if the owner or operator shuts down the compliance equipment (other than monitoring systems) to avoid damage due to a contemporaneous start-up, shutdown, or malfunction of the affected source or portion thereof. If the owner or operator has reason to believe that monitoring equipment would be damaged due to a contemporaneous start-up, shutdown, or malfunction of the affected source or portion thereof, the owner or operator shall provide documentation supporting such a claim in the Precompliance Report or in a supplement to the Precompliance Report, as provided in § 63.1335(e)(3). Once approved by the Administrator in accordance with § 63.1335(e)(3)(viii), the provision for ceasing to collect, during a start-up, shutdown, or malfunction, monitoring data that would otherwise be required by the provisions of this subpart must be incorporated into the start-up, shutdown, malfunction plan for that affected source, as stated in § 63.1335(b)(1).

(4) During start-ups, shutdowns, and malfunctions when the emission limitations of this subpart do not apply pursuant to paragraphs (j)(1) through (j)(3) of this section, the owner or operator shall implement, to the extent reasonably available, measures to prevent or minimize excess emissions to the extent practical. For purposes of this paragraph, the term ''excess emissions'' means emissions greater than those allowed by the emissions limitation which would apply during operational periods other than start-up, shutdown, and malfunction. The measures to be taken shall be identified in the applicable start-up, shutdown, and malfunction plan, and may include, but are not limited to, air pollution control technologies, recovery technologies, work practices, pollution prevention, monitoring, and/or changes in the manner of operation of the affected source. Back-up control devices are not required, but may be used if available.

[61 FR 48229, Sept. 12, 1996, as amended at 65 FR 38094, June 19, 2000; 66 FR 36937, July 16, 2001]

§ 63.1311 Compliance dates and relationship of this subpart to existing applicable rules.

(a) Affected sources are required to achieve compliance on or before the dates specified in paragraphs (b) through (d) of this section. Paragraph (e) of this section provides information on requesting compliance extensions. Paragraphs (f) through (n) of this section discuss the relationship of this subpart to subpart A of this part and to other applicable rules. Where an override of another authority of the Act is indicated in this subpart, only compliance with the provisions of this subpart is required. Paragraph (o) of this section specifies the meaning of time periods.

(b) New affected sources that commence construction or reconstruction after March 29, 1995 shall be in compliance with this subpart upon initial start-up or by June 19, 2000, whichever is later, except that new affected sources whose primary product, as determined using the procedures specified in § 63.1310(f), is PET shall be in

compliance with §63.1331 upon initial start-up or August 6, 2002, whichever is later.

(c) Existing affected sources shall be in compliance with this subpart (except for §63.1331 for which compliance is covered by paragraph (d) of this section) no later than June 19, 2001, as provided in §63.6(c), unless an extension has been granted as specified in paragraph (e) of this section, except that the compliance date for the provisions contained in §63.1329 is extended to February 27, 2001, for existing affected sources whose primary product, as determined using the procedures specified in §63.1310(f), is PET using a continuous terephthalic acid high viscosity multiple end finisher process.

[NOTE TO PARAGRAPH (C): The compliance date of February 27, 2001 for the provisions of §63.1329 for existing affected sources whose primary product, as determined using the procedures specified in 63.1310(f), is PET using a continuous terephthalic acid high viscosity multiple end finisher process is stayed indefinitely. The EPA will publish a document in the FEDERAL REGISTER establishing a new compliance date for these sources.]

(d) Except as provided for in paragraphs (d)(1) through (d)(6) of this section, existing affected sources shall be in compliance with §63.1331 no later than June 19, 2001, unless an extension has been granted pursuant to paragraph (e) of this section.

(1) Compliance with the compressor provisions of §63.164 shall occur no later than February 27, 1998, for any compressor meeting one or more of the criteria in paragraphs (d)(1)(i) through (d)(1)(iv) of this section, if the work can be accomplished without a process unit shutdown:

(i) The seal system will be replaced;

(ii) A barrier fluid system will be installed;

(iii) A new barrier fluid will be utilized which requires changes to the existing barrier fluid system; or

(iv) The compressor will be modified to permit connecting the compressor to a fuel gas system or a closed vent system or modified so that emissions from the compressor can be routed to a process.

(2) Compliance with the compressor provisions of §63.164 shall occur no later than March 12, 1998 for any compressor meeting all the criteria in paragraphs (d)(2)(i) through (d)(2)(iv) of this section:

(i) The compressor meets one or more of the criteria specified in paragraphs (d)(1)(i) through (d)(1)(iv) of this section;

(ii) The work can be accomplished without a process unit shutdown ;

(iii) The additional time is actually necessary due to the unavailability of parts beyond the control of the owner or operator; and

(iv) The owner or operator submits the request for a compliance extension to the appropriate Environmental Protection Agency (EPA) Regional Office at the address listed in §63.13 no later than June 16, 1997. The request for a compliance extension shall contain the information specified in §63.6(i)(6)(i)(A), (B), and (D). Unless the EPA Regional Office objects to the request for a compliance extension within 30 days after receipt of the request, the request shall be deemed approved.

(3) If compliance with the compressor provisions of §63.164 cannot reasonably be achieved without a process unit shutdown, the owner or operator shall achieve compliance no later than September 12, 1998. The owner or operator who elects to use this provision shall submit a request for a compliance extension in accordance with the requirements of paragraph (d)(2)(iv) of this section.

(4) Compliance with the compressor provisions of §63.164 shall occur not later than September 12, 1999 for any compressor meeting one or more of the criteria in paragraphs (d)(4)(i) through (d)(4)(iii) of this section. The owner or operator who elects to use these provisions shall submit a request for an extension of compliance in accordance with the requirements of paragraph (d)(2)(iv) of this section.

(i) Compliance cannot be achieved without replacing the compressor;

(ii) Compliance cannot be achieved without recasting the distance piece; or

(iii) Design modifications are required to connect to a closed-vent or recovery system.

(5) Compliance with the provisions of §63.170 shall occur no later than June 19, 2001.

(6) Nothhstanding paragraphs (d)(1) through (5) of this section, existing affected sources whose primary product, as determined using the procedures specified in § 63.1310(f), is PET shall be in compliance with § 63.1331 no later than August 6, 2002.

(e) Pursuant to Section 112(i)(3)(B) of the Act, an owner or operator may request an extension allowing the existing affected source up to 1 additional year to comply with Section 112(d) standards. For purposes of this subpart, a request for an extension shall be submitted to the permitting authority as part of the operating permit application or to the Administrator as a separate submittal or as part of the Precompliance Report. Requests for extensions shall be submitted no later than 120 days prior to the compliance dates specified in paragraphs (b) through (d) of this section, or as specified elsewhere in this subpart, except as provided in paragraph (e)(3) of this section. The dates specified in § 63.6(i) for submittal of requests for extensions shall not apply to this subpart.

(1) A request for an extension of compliance shall include the data described in § 63.6(i)(6)(i) (A),(B), and (D).

(2) The requirements in § 63.6(i)(8) through § 63.6(i)(14) shall govern the review and approval of requests for extensions of compliance with this subpart.

(3) An owner or operator may submit a compliance extension request after the date specified in paragraph (e) of this section, provided that the need for the compliance extension arose after that date, and the need arose due to circumstances beyond reasonable control of the owner or operator. This request shall include, in addition to the information specified in paragraph (e)(1) of this section, a statement of the reasons additional time is needed and the date when the owner or operator first learned of the circumstances necessitating a request for compliance extension under this paragraph (e)(3).

(f) Table 1 of this subpart specifies the provisions of subpart A of this part that apply and those that do not apply to owners and operators of affected sources subject to this subpart.

(g)(1) After the compliance dates specified in this section, an affected source subject to this subpart that is also subject to the provisions of subpart I of this part, is required to comply only with the provisions of this subpart. After the compliance dates specified in this section, said affected source shall no longer be subject to subpart I of this part.

(2) Said affected sources that elected to comply with subpart I of this part through a quality improvement program, as specified in § 63.175 or § 63.176 or both, may elect to continue these programs without interruption as a means of complying with this subpart. In other words, becoming subject to this subpart does not restart or reset the ''compliance clock'' as it relates to reduced burden earned through a quality improvement program.

(h) After the compliance dates specified in this section, a storage vessel that is assigned to an affected source subject to this subpart and that is also subject to the provisions of 40 CFR part 60, subpart Kb, is required to comply only with the provisions of this subpart. After the compliance dates specified in this section, said storage vessel shall no longer be subject to 40 CFR part 60, subpart Kb.

(i)(1) Except as provided in paragraphs (i)(2) and (i)(3) of this section, after the compliance dates specified in this section, affected sources producing PET using a continuous terephthalic acid process, producing PET using a continuous dimethyl terephthalate process, or producing polystyrene resin using a continuous process subject to this subpart that are also subject to the provisions of 40 CFR part 60, subpart DDD, are required to comply only with the provisions of this subpart. After the compliance dates specified in this section, said sources shall no longer be subject to 40 CFR part 60, subpart DDD.

(2) Existing affected sources producing PET using a continuous terephthalic acid high viscosity multiple end finisher process shall continue to be subject to 40 CFR 60.562–1(c)(2)(ii)(C). Once said affected source becomes subject to and achieves compliance with § 63.1329(c) of this subpart, said affected source is no longer subject to the provisions of 40 CFR part 60, subpart DDD.

(3) Existing affected sources producing PET using a continuous terephthalic acid process, but not using a continuous terephthalic acid high viscosity multiple end finisher process, that are subject to and complying with 40 CFR 60.562–1(c)(2)(ii)(B) shall continue to comply with said section. Existing affected sources producing PET using a continuous dimethyl terephthalic process that are subject to and complying with 40 CFR 60.562–1(c)(1)(ii)(B) shall continue to comply with said section.

(j) Owners or operators of affected sources subject to this subpart that are also subject to the provisions of subpart Q of this part shall comply with both subparts.

(k) After the compliance dates specified in this section, an affected source subject to this subpart that is also subject to the provisions of 40 CFR part 60, subpart VV, is required to comply only with the provisions of this subpart. After the compliance dates specified in this section, said source shall no longer be subject to 40 CFR part 60, subpart VV.

(l) After the compliance dates specified in this section, a distillation operation that is assigned to an affected source subject to this subpart that is also subject to the provisions of 40 CFR part 60, subpart NNN, is required to comply only with the provisions of this subpart. After the compliance dates specified in this section, the distillation operation shall no longer be subject to 40 CFR part 60, subpart NNN.

(m) *Applicability of other regulations for monitoring, recordkeeping or reporting with respect to combustion devices, recovery devices, or recapture devices.* After the compliance dates specified in this subpart, if any combustion device, recovery device or recapture device subject to this subpart is also subject to monitoring, recordkeeping, and reporting requirements in 40 CFR part 264 subpart AA or CC, or is subject to monitoring and recordkeeping requirements in 40 CFR part 265 subpart AA or CC and the owner or operator complies with the periodic reporting requirements under 40 CFR part 264 subpart AA or CC that would apply to the device if the facility had final-permitted status, the owner or operator may elect to comply either with the monitoring, recordkeeping and reporting requirements of this subpart, or with the monitoring, recordkeeping and reporting requirements in 40 CFR parts 264 and/or 265, as described in this paragraph, which shall constitute compliance with the monitoring, recordkeeping and reporting requirements of this subpart. The owner or operator shall identify which option has been selected in the Notification of Compliance Status required by §63.1335(e)(5).

(n) *Applicability of other requirements for heat exchange systems or waste management units.* Paragraphs (n)(1) and (n)(2) of this section address instances in which certain requirements from other regulations also apply for the same heat exchange system(s) or waste management unit(s) that are subject to this subpart.

(1) After the applicable compliance date specified in this subpart, if a heat exchange system subject to this subpart is also subject to a standard identified in paragraphs (n)(1)(i) or (ii) of this section, compliance with the applicable provisions of the standard identified in paragraphs (n)(1)(i) or (ii) of this section shall constitute compliance with the applicable provisions of this subpart with respect to that heat exchange system.

(i) Subpart F of this part.

(ii) A subpart of this part which requires compliance with §63.104 (*e.g.*, subpart U of this part).

(2) After the applicable compliance date specified in this subpart, if any waste management unit subject to this subpart is also subject to a standard identified in paragraph (n)(2)(i) or (ii) of this section, compliance with the applicable provisions of the standard identified in paragraph (n)(2)(i) or (ii) of this section shall constitute compliance with the applicable provisions of this subpart with respect to that waste management unit.

(i) Subpart G of this part.

(ii) A subpart of this part which requires compliance with §§63.132 through 63.147.

(o) All terms in this subpart that define a period of time for completion of required tasks (*e.g.*, weekly, monthly, quarterly, annual), unless specified otherwise in the section or paragraph

that imposes the requirement, refer to the standard calendar periods.

(1) Notwithstanding time periods specified in this subpart for completion of required tasks, such time periods may be changed by mutual agreement between the owner or operator and the Administrator, as specified in subpart A of this part (*e.g.*, a period could begin on the compliance date or another date, rather than on the first day of the standard calendar period). For each time period that is changed by agreement, the revised period shall remain in effect until it is changed. A new request is not necessary for each recurring period.

(2) Where the period specified for compliance is a standard calendar period, if the initial compliance date occurs after the beginning of the period, compliance shall be required according to the schedule specified in paragraphs (o)(2)(i) or (o)(2)(ii) of this section, as appropriate.

(i) Compliance shall be required before the end of the standard calendar period within which the compliance deadline occurs, if there remain at least 3 days for tasks that must be performed weekly, at least 2 weeks for tasks that must be performed monthly, at least 1 month for tasks that must be performed each quarter, or at least 3 months for tasks that must be performed annually; or

(ii) In all other cases, compliance shall be required before the end of the first full standard calendar period after the period within which the initial compliance deadline occurs.

(3) In all instances where a provision of this subpart requires completion of a task during each of multiple successive periods, an owner or operator may perform the required task at any time during the specified period, provided that the task is conducted at a reasonable interval after completion of the task during the previous period.

[61 FR 48229, Sept. 12, 1996, as amended at 62 FR 1838, Jan. 14, 1997; 62 FR 30995, June 6, 1997; 63 FR 9945, Feb. 27, 1998; 63 FR 15315, Mar. 31, 1998; 64 FR 11547, Mar. 9, 1999; 64 FR 30409, June 8, 1999; 64 FR 35028, June 30, 1999; 65 FR 38100, June 19, 2000; 66 FR 11236, Feb. 23, 2001; 66 FR 11546, Feb. 26, 2001; 66 FR 36937, July 16, 2001; 66 FR 40907, Aug. 6, 2001]

§ 63.1312 Definitions.

(a) The following terms used in this subpart shall have the meaning given them in § 63.2, § 63.101, § 63.111, § 63.161, or the Act, as specified after each term:

Act (§ 63.2)
Administrator (§ 63.2)
Automated monitoring and recording system (§ 63.111)
Boiler (§ 63.111)
Bottoms receiver (§ 63.161)
By compound (§ 63.111)
By-product (§ 63.101)
Car-seal (§ 63.111)
Closed-vent system (§ 63.111)
Combustion device (§ 63.111)
Commenced (§ 63.2)
Compliance date (§ 63.2)
Connector (§ 63.161)
Continuous monitoring system (§ 63.2)
Distillation unit (§ 63.111)
Duct work (§ 63.161)
Emission limitation (Section 302(k) of the Act)
Emission standard (§ 63.2)
Emissions averaging (§ 63.2)
EPA (§ 63.2)
Equipment leak (§ 63.101)
External floating roof (§ 63.111)
Fill or filling (§ 63.111)
First attempt at repair (§ 63.161)
Fixed capital cost (§ 63.2)
Flame zone (§ 63.111)
Floating roof (§ 63.111)
Flow indicator (§ 63.111)
Fuel gas system (§ 63.101)
Halogens and hydrogen halides (§ 63.111)
Hard-piping (§ 63.111)
Hazardous air pollutant (§ 63.2)
Impurity (§ 63.101)
In organic hazardous air pollutant service or in organic HAP service (§ 63.161)
Incinerator (§ 63.111)
Instrumentation system (§ 63.161)
Internal floating roof (§ 63.111)
Lesser quantity (§ 63.2)
Major source (§ 63.2)
Malfunction (§ 63.2)
Oil-water separator or organic-water separator (§ 63.111)
Open-ended valve or line (§ 63.161)
Operating permit (§ 63.101)
Organic monitoring device (§ 63.111)
Owner or operator (§ 63.2)
Performance evaluation (§ 63.2)
Performance test (§ 63.2)
Permitting authority (§ 63.2)
Plant site (§ 63.101)

Potential to emit (§63.2)
Pressure release (§63.161)
Primary fuel (§63.111)
Process heater (§63.111)
Process unit shutdown (§63.161)
Process wastewater (§63.101)
Process wastewater stream (§63.111)
Reactor (§63.111)
Recapture device (§63.101)
Repaired (§63.161)
Research and development facility (§63.101)
Routed to a process or route to a process (§63.161)
Run (§63.2)
Secondary fuel (§63.111)
Sensor (§63.161)
Specific gravity monitoring device (§63.111)
Start-up, shutdown, and malfunction plan (§63.101)
State (§63.2)
Stationary Source (§63.2)
Surge control vessel (§63.161)
Temperature monitoring device (§63.111)
Test method (§63.2)
Treatment process (§63.111)
Unit operation (§63.101)
Visible emission (§63.2)

(b) All other terms used in this subpart shall have the meaning given them in this section. If a term is defined in §§63.2, 63.101, 63.111, or 63.161 and in this section, it shall have the meaning given in this section for purposes of this subpart.

Acrylonitrile butadiene styrene latex resin (ABS latex) means ABS produced through an emulsion process; however, the product is not coagulated or dried as typically occurs in an emulsion process.

Acrylonitrile butadiene styrene resin (ABS) means styrenic terpolymers consisting primarily of acrylonitrile, 1,3-butadiene, and styrene monomer units. ABS is usually composed of a styrene-acrylonitrile copolymer continuous phase with dispersed butadiene derived rubber.

Acrylonitrile styrene acrylate resin (ASA) means a resin formed using acrylic ester-based elastomers to impact-modify styrene acrylonitrile resin matrices.

Aggregate batch vent stream means a gaseous emission stream containing only the exhausts from two or more batch process vents that are ducted, hardpiped, or otherwise connected together for a continuous flow.

Affected source is defined in §63.1310(a).

Alpha methyl styrene acrylonitrile resin (AMSAN) means copolymers consisting primarily of alpha methyl styrene and acrylonitrile.

Annual average batch vent concentration is determined using Equation 1, as described in §63.1323(h)(2) for halogenated compounds.

Annual average batch vent flow rate is determined by the procedures in §63.1323(e)(3).

Annual average concentration, as used in the wastewater provisions, means the flow-weighted annual average concentration, as determined according to the procedures specified in §63.144(b), with the exceptions noted in §63.1330, for the purposes of this subpart.

Annual average flow rate, as used in the wastewater provisions, means the annual average flow rate, as determined according to the procedures specified in §63.144(c), with the exceptions noted in §63.1330, for the purposes of this subpart.

Average batch vent concentration is determined by the procedures in §63.1323(b)(5)(iii) for HAP concentrations and is determined by the procedures in §63.1323(h)(1)(iii) for organic compounds containing halogens and hydrogen halides.

Average batch vent flow rate is determined by the procedures in §63.1323(e)(1) and (e)(2).

Batch cycle means the operational step or steps, from start to finish, that occur as part of a batch unit operation.

Batch emission episode means a discrete emission venting episode associated with a single batch unit operation. Multiple batch emission episodes may occur from a single batch unit operation.

Batch mass input limitation means an enforceable restriction on the total mass of HAP or material that can be input to a batch unit operation in one year.

Batch mode means the discontinuous bulk movement of material through a unit operation. Mass, temperature, concentration, and other properties

may vary with time. For a unit operation operated in a batch mode (*i.e.*, batch unit operation), the addition of material and withdrawal of material do not typically occur simultaneously.

Batch process means, for the purposes of this subpart, a process where the reactor(s) is operated in a batch mode.

Batch process vent means a process vent with annual organic HAP emissions greater than 225 kilograms per year from a batch unit operation within an affected source. Annual organic HAP emissions are determined as specified in § 63.1323(b) at the location specified in § 63.1323(a)(2).

Batch unit operation means a unit operation operated in a batch mode.

Combined vent stream, as used in reference to batch process vents, continuous process vents, and aggregate batch vent streams, means the emissions from a combination of two or more of the aforementioned types of process vents. The primary occurrence of a combined vent stream is the combined emissions from a continuous process vent and a batch process vent.

Combustion device burner means a device designed to mix and ignite fuel and air to provide a flame to heat and oxidize waste organic vapors in a combustion device.

Compounding unit means a unit operation which blends, melts, and resolidifies solid polymers for the purpose of incorporating additives, colorants, or stabilizers into the final thermoplastic product. A unit operation whose primary purpose is to remove residual monomers from polymers is not a compounding unit.

Construction means the on-site fabrication, erection, or installation of an affected source. Construction also means the on-site fabrication, erection, or installation of a process unit or combination of process units which subsequently becomes an affected source or part of an affected source, due to a change in primary product.

Continuous mode means the continuous movement of material through a unit operation. Mass, temperature, concentration, and other properties typically approach steady-state conditions. For a unit operation operated in a continuous mode (*i.e.*, continuous unit operation), the simultaneous addition of raw material and withdrawal of product is typical.

Continuous process means, for the purposes of this subpart, a process where the reactor(s) is operated in a continuous mode.

Continuous process vent means a process vent containing greater than 0.005 weight percent total organic HAP from a continuous unit operation within an affected source. The total organic HAP weight percent is determined after the last recovery device, as described in § 63.115(a), and is determined as specified in § 63.115(c).

Continuous record means documentation, either in hard copy or computer readable form, of data values measured at least once every 15 minutes and recorded at the frequency specified in § 63.1335(d) or § 63.1335(h).

Continuous recorder means a data recording device that either records an instantaneous data value at least once every 15 minutes or records 1-hour or more frequent block average values.

Continuous unit operation means a unit operation operated in a continuous mode.

Control device is defined in § 63.111, except that the term ''continuous process vents subject to § 63.1315'' shall apply instead of the term ''process vents,'' for the purpose of this subpart.

Drawing unit means a unit operation which converts polymer into a different shape by melting or mixing the polymer and then pulling it through an orifice to create a continuously extruded product.

Emission point means an individual continuous process vent, batch process vent, storage vessel, waste management unit, equipment leak, heat exchange system, or process contact cooling tower, or equipment subject to § 63.149.

Emulsion process means a process where the monomer(s) is dispersed in droplets throughout the water phase with the aid of an emulsifying agent such as soap or a synthetic emulsifier. The polymerization occurs either within the emulsion droplet or in the aqueous phase.

Equipment means, for the purposes of the provisions in §63.1331 and the requirements in subpart H that are referred to in §63.1331, each pump, compressor, agitator, pressure relief device, sampling connection system, open-ended valve or line, valve, connector, surge control vessel, bottoms receiver, and instrumentation system in organic hazardous air pollutant service; and any control devices or systems required by subpart H of this part.

Existing affected source is defined in §63.1310(a)(3).

Existing process unit means any process unit that is not a new process unit.

Expandable polystyrene resin (EPS) means a polystyrene bead to which a blowing agent has been added using either an in-situ suspension process or a post-impregnation suspension process.

Extruding unit means a unit operation which converts polymer into a different shape by melting or mixing the polymer and then forcing it through an orifice to create a continuously extruded product.

Flexible operation unit means a process unit that manufactures different chemical products, polymers, or resins periodically by alternating raw materials or operating conditions. These units are also referred to as campaign plants or blocked operations.

Group 1 batch process vent means a batch process vent releasing annual organic HAP emissions greater than the level specified in §63.1323(d) and with a cutoff flow rate, calculated in accordance with §63.1323(f), greater than or equal to the annual average batch vent flow rate. Annual organic HAP emissions and annual average batch vent flow rate are determined at the exit of the batch unit operation, as described in §63.1323(a)(2). Annual organic HAP emissions are determined as specified in §63.1323(b), and annual average batch vent flow rate is determined as specified in §63.1323(e).

Group 2 batch process vent means a batch process vent that does not fall within the definition of a Group 1 batch process vent.

Group 1 continuous process vent means a continuous process vent releasing a gaseous emission stream that has a total resource effectiveness index value, calculated according to §63.115, less than or equal to 1.0 unless the continuous process vent is associated with existing thermoplastic product process units that produce methyl methacrylate butadiene styrene resin, then said vent falls within the Group 1 definition if the released emission stream has a total resource effectiveness index value less than or equal to 3.7.

Group 2 continuous process vent means a continuous process vent that does not fall within the definition of a Group 1 continuous process vent.

Group 1 storage vessel means a storage vessel at an existing affected source that meets the applicability criteria specified in Table 2 or Table 3 of this subpart, or a storage vessel at a new affected source that meets the applicability criteria specified in Table 4 or Table 5 of this subpart.

Group 2 storage vessel means a storage vessel that does not fall within the definition of a Group 1 storage vessel.

Group 1 wastewater stream means a wastewater stream consisting of process wastewater from an existing or new affected source that meets the criteria for Group 1 status in §63.132(c) and/or that meets the criteria for Group 1 status in §63.132(d), with the exceptions listed in §63.1330(b)(8) for the purposes of this subpart (i.e., for organic HAP as defined in this section).

Group 2 wastewater stream means any process wastewater stream that does not meet the definition of a Group 1 wastewater stream.

Halogenated aggregate batch vent stream means an aggregate batch vent stream determined to have a total mass emission rate of halogen atoms contained in organic compounds of 3,750 kilograms per year or greater determined by the procedures specified in §63.1323(h).

Halogenated batch process vent means a batch process vent determined to have a mass emission rate of halogen atoms contained in organic compounds of 3,750 kilograms per year or greater determined by the procedures specified in §63.1323(h).

Halogenated continuous process vent means a continuous process vent determined to have a mass emission rate of halogen atoms contained in organic compounds of 0.45 kilograms per hour

or greater determined by the procedures specified in § 63.115(d)(2)(v).

Heat exchange system means any cooling tower system or once-through cooling water system (*e.g.*, river or pond water) designed and intended to operate to not allow contact between the cooling medium and process fluid or gases (*i.e.*, a noncontact system). A heat exchange system can include more than one heat exchanger and can include recirculating or once-through cooling systems.

Highest-HAP recipe for a product means the recipe of the product with the highest total mass of HAP charged to the reactor during the production of a single batch of product.

Initial start-up means the first time a new or reconstructed affected source begins production of a thermoplastic product, or, for equipment added or changed as described in § 63.1310(i), the first time the equipment is put into operation to produce a thermoplastic product. Initial start-up does not include operation solely for testing equipment. Initial start-up does not include subsequent start-ups of an affected source or portion thereof following malfunctions or shutdowns or following changes in product for flexible operation units or following recharging of equipment in batch operation. Further, for purposes of § 63.1311 and § 63.1331, initial start-up does not include subsequent start-ups of affected sources or portions thereof following malfunctions or process unit shutdowns.

Maintenance wastewater is defined in § 63.101, except that the term ''thermoplastic product process unit'' shall apply wherever the term ''chemical manufacturing process unit'' is used. Further, the generation of wastewater from the routine rinsing or washing of equipment in batch operation between batches is not maintenance wastewater, but is considered to be process wastewater, for the purposes of this subpart.

Mass process means a polymerization process carried out through the use of thermal energy. Mass processes do not utilize emulsifying or suspending agents, but may utilize catalysts or other additives.

Material recovery section means, for PET plants, the equipment that recovers by-product methanol from any process section for use, reuse, or sale, or the equipment that separates materials containing by-product methanol from any process section for off-site purification or treatment with the intent to recover methanol for reuse. For polystyrene plants, material recovery section means the equipment that recovers unreacted styrene from any process section for use, reuse, or sale, or the equipment that separates materials containing unreacted styrene from any process section for off-site purification or treatment with the intent to recover styrene for reuse. Equipment used to store recovered materials (*i.e.*, ethylene glycol, methanol, or styrene) is not included. Equipment designed to recover or separate materials from the polymer product is to be included in this process section, provided that at the time of initial compliance some of the unreacted or by-product material is recovered for return to the TPPU, or sale, or provided that some of the separated material is sent for off-site purification or treatment with the intent to recover the unreacted or by-product material for reuse. Otherwise, such equipment is to be assigned to one of the other process sections, as appropriate. If equipment is used to recover unreacted or by-product material and return it directly to the same piece of process equipment from which it was emitted, then that recovery equipment is considered part of the process section that contains the process equipment. On the other hand, if equipment is used to recover unreacted or by-product material and return it to a different piece of process equipment in the same process section, that recovery equipment is considered part of a material recovery section. Equipment used for the on-site recovery of ethylene glycol from PET plants, however, is not included in the material recovery section; such equipment is to be included in the polymerization reaction section. Equipment used for the on-site recovery of both ethylene glycol and any other materials from PET plants is not included in the material recovery section; this

equipment is to be included in the polymerization reaction section. Such equipment includes both contact and non-contact condensers removing ethylene glycol from vapor streams coming out of polymerization vessels.

Maximum true vapor pressure is defined in §63.111, except that the terms ''transfer'' or ''transferred'' shall not apply for purposes of this subpart.

Methyl methacrylate acrylonitrile butadiene styrene resin (MABS) means styrenic polymers containing methyl methacrylate, acrylonitrile, butadiene, and styrene. MABS is prepared by dissolving or dispersing polybutadiene rubber in a mixture of methyl methacrylate-acrylonitrile-styrene and butadiene monomer. The graft polymerization is carried out by a bulk or a suspension process.

Methyl methacrylate butadiene styrene resin (MBS) means styrenic polymers containing methyl methacrylate, butadiene, and styrene. Production of MBS is achieved using an emulsion process in which methyl methacrylate and styrene are grafted onto a styrene-butadiene rubber.

Multicomponent system means, as used in conjunction with batch process vents, a stream whose liquid and/or vapor contains more than one compound.

New process unit means a process unit for which the construction or reconstruction commenced after March 29, 1995.

Nitrile resin means a resin produced through the polymerization of acrylonitrile, methyl acrylate, and butadiene latex using an emulsion process.

On-site or *On site* means, with respect to records required to be maintained by this subpart or required by another subpart referenced by this subpart, that records are stored at a location within a major source which encompasses the affected source. On-site includes, but is not limited to, storage at the affected source or TPPU to which the records pertain, or storage in central files elsewhere at the major source.

Operating day means the period defined by the owner or operator in the Notification of Compliance Status required by §63.1335(e)(5). The operating day is the period for which daily average monitoring values and batch cycle daily average monitoring values are determined.

Organic hazardous air pollutant(s) (organic HAP) means one or more of the chemicals listed in Table 6 of this subpart or any other chemical which is:

(1) Knowingly produced or introduced into the manufacturing process other than as an impurity; and

(2) Listed in Table 2 of subpart F of this part.

PET using a dimethyl terephthalate process means the manufacturing of PET based on the esterification of dimethyl terephthalate with ethylene glycol to form the intermediate monomer bis-(2-hydroxyethyl)-terephthalate that is subsequently polymerized to form PET.

PET using a terephthalic acid process means the manufacturing of PET based on the esterification reaction of terephthalic acid with ethylene glycol to form the intermediate monomer bis-(2-hydroxyethyl)-terephthalate that is subsequently polymerized to form PET.

Poly(ethylene terephthalate) resin (PET) means a polymer or copolymer comprised of at least 50 percent bis-(2-hydroxyethyl)-terephthalate by weight.

Polymerization reaction section means the equipment designed to cause monomer(s) to react to form polymers, including equipment designed primarily to cause the formation of short polymer chains (*e.g.*, oligomers or low molecular weight polymers), but not including equipment designed to prepare raw materials for polymerization (*e.g.*, esterification vessels). For the purposes of these standards, the polymerization reaction section begins with the equipment used to transfer the materials from the raw materials preparation section and ends with the last vessel in which polymerization occurs. Equipment used for the on-site recovery of ethylene glycol from PET plants is included in this process section, rather than in the material recovery process section.

Polystyrene resin means a thermoplastic polymer or copolymer comprised of at least 80 percent styrene or para-methylstyrene by weight.

Primary product is defined in and determined by the procedures specified in § 63.1310(f).

Process contact cooling tower system means a cooling tower system that is designed and operated to allow contact between the cooling medium and process fluid or gases.

Process section means the equipment designed to accomplish a general but well-defined task in polymers production. Process sections include, but are not limited to, raw materials preparation, polymerization reaction, and material recovery. A process section may be dedicated to a single TPPU or common to more than one TPPU.

Process unit means a collection of equipment assembled and connected by hardpiping or duct work, used to process raw materials and to manufacture a product.

Process vent means a gaseous emission stream from a unit operation that is discharged to the atmosphere either directly or after passing through one or more control, recovery, or recapture devices. Unit operations that may have process vents are condensers, distillation units, reactors, or other unit operations within the TPPU. Process vents exclude pressure releases, gaseous streams routed to a fuel gas system(s), and leaks from equipment regulated under § 63.1331. A gaseous emission stream is no longer considered to be a process vent after the stream has been controlled and monitored in accordance with the applicable provisions of this subpart.

Product means a polymer produced using the same monomers and varying in additives (*e.g.*, initiators, terminators, etc.); catalysts; or in the relative proportions of monomers, that is manufactured by a process unit. With respect to polymers, more than one recipe may be used to produce the same product. As an example, styrene acrylonitrile resin and methyl methacrylate butadiene styrene resin each represent a different product. Product also means a chemical that is not a polymer, that is manufactured by a process unit. By-products, isolated intermediates, impurities, wastes, and trace contaminants are not considered products.

Raw materials preparation section means the equipment at a polymer manufacturing plant designed to prepare raw materials, such as monomers and solvents, for polymerization. For the purposes of the standards in this subpart, this process section includes the equipment used to transfer raw materials from storage and/or the equipment used to transfer recovered material from the material recovery process sections to the raw material preparation section, and ends with the last piece of equipment that prepares the material for polymerization. The raw materials preparation section may include equipment that is used to purify, dry, or otherwise treat raw materials or raw and recovered materials together; to activate catalysts; or to promote esterification including the formation of some short polymer chains (oligomers). The raw materials preparation section does not include equipment that is designed primarily to accomplish the formation of oligomers, the treatment of recovered materials alone, or the storage of raw or recovered materials.

Recipe means a specific composition, from among the range of possible compositions that may occur within a product, as defined in this section. A recipe is determined by the proportions of monomers and, if present, other reactants and additives that are used to make the recipe. For example, acrylonitrile butadiene styrene latex resin (ABS latex) without additives; ABS latex with an additive; and ABS latex with different proportions of acrylonitrile to butadiene are all different recipes of the same product, ABS latex.

Reconstruction means the replacement of components of an affected source or of a previously unaffected stationary source that becomes an affected source as a result of the replacement, to such an extent that:

(1) The fixed capital cost of the new components exceeds 50 percent of the fixed capital cost that would be required to construct a comparable new source; and

(2) It is technologically and economically feasible for the reconstructed source to meet the provisions of this subpart.

Recovery device means:

(1) An individual unit of equipment capable of and normally used for the purpose of recovering chemicals for:

(i) Use;

(ii) Reuse;

(iii) Fuel value (*i.e.*, net heating value); or

(iv) For sale for use, reuse, or fuel value (*i.e.*, net heating value).

(2) Examples of equipment that may be recovery devices include absorbers, carbon adsorbers, condensers, oil-water separators or organic-water separators, or organic removal devices such as decanters, strippers, or thin-film evaporation units. For the purposes of the monitoring, recordkeeping, or reporting requirements of this subpart, recapture devices are considered recovery devices.

Recovery operations equipment means the equipment used to separate the components of process streams. Recovery operations equipment includes distillation units, condensers, etc. Equipment used for wastewater treatment and recovery or recapture devices used as control devices shall not be considered recovery operations equipment.

Residual is defined in §63.111, except that when the definition in §63.111 uses the term ''Table 9 compounds,'' the term ''organic HAP listed in Table 6 of subpart JJJ'' shall apply for purposes of this subpart.

Shutdown means for purposes including, but not limited to, periodic maintenance, replacement of equipment, or repair, the cessation of operation of an affected source, a TPPU(s) within an affected source, a waste management unit or unit operation within an affected source, or equipment required or used to comply with this subpart, or the emptying or degassing of a storage vessel. For purposes of the wastewater provisions of §63.1330, shutdown does not include the routine rinsing or washing of equipment in batch operation between batches. For purposes of the batch process vent provisions in §§63.1321 through 63.1327, the cessation of equipment in batch operation is not a shutdown, unless the equipment undergoes maintenance, is replaced, or is repaired.

Solid state polymerization process means a unit operation which, through the application of heat, furthers the polymerization (*i.e.*, increases the intrinsic viscosity) of polymer chips.

Start-up means the setting into operation of an affected source, a TPPU(s) within an affected source, a waste management unit or unit operation within an affected source, or equipment required or used to comply with this subpart, or a storage vessel after emptying and degassing. For both continuous and batch processes, start-up includes initial start-up and operation solely for testing equipment. For both continuous and batch processes, start-up does not include the recharging of equipment in batch operation. For continuous processes, start-up includes transitional conditions due to changes in product for flexible operation units. For batch processes, start-up does not include transitional conditions due to changes in product for flexible operation units.

Steady-state conditions means that all variables (temperatures, pressures, volumes, flow rates, *etc.*) in a process do not vary significantly with time; minor fluctuations about constant mean values may occur.

Storage vessel means a tank or other vessel that is used to store liquids that contain one or more organic HAP. Storage vessels do not include:

(1) Vessels permanently attached to motor vehicles such as trucks, railcars, barges, or ships;

(2) Pressure vessels designed to operate in excess of 204.9 kilopascals and without emissions to the atmosphere;

(3) Vessels with capacities smaller than 38 cubic meters;

(4) Vessels and equipment storing and/or handling material that contains no organic HAP and/or organic HAP as impurities only;

(5) Wastewater storage tanks; and

(6) Surge control vessels and bottoms receivers.

Styrene acrylonitrile resin (SAN) means copolymers consisting primarily of styrene and acrylonitrile monomer units.

Supplemental combustion air means the air that is added to a vent stream after the vent stream leaves the unit operation. Air that is part of the vent stream as a result of the nature of the unit operation is not considered supplemental combustion air. Air required to operate combustion device burner(s) is

not considered supplemental combustion air. Air required to ensure the proper operation of catalytic oxidizers, to include the intermittent addition of air upstream of the catalyst bed to maintain a minimum threshold flow rate through the catalyst bed or to avoid excessive temperatures in the catalyst bed, is not considered to be supplemental combustion air.

Suspension process means a polymerization process where the monomer(s) is in a state of suspension, with the help of suspending agents, in a medium other than water (typically an organic solvent). The resulting polymers are not soluble in the reactor medium.

Thermoplastic product means one of the following types of products:

(1) ABS latex;

(2) ABS using a batch emulsion process;

(3) ABS using a batch suspension process;

(4) ABS using a continuous emulsion process;

(5) ABS using a continuous mass process;

(6) ASA/AMSAN;

(7) EPS;

(8) MABS;

(9) MBS;

(10) nitrile resin;

(11) PET using a batch dimethyl terephthalate process;

(12) PET using a batch terephthalic acid process;

(13) PET using a continuous dimethyl terephthalate process;

(14) PET using a continuous terephthalic acid process;

(15) PET using a continuous terephthalic acid high viscosity multiple end finisher process;

(16) Polystyrene resin using a batch process;

(17) Polystyrene resin using a continuous process;

(18) SAN using a batch process; or

(19) SAN using a continuous process.

Thermoplastic product process unit (TPPU) means a collection of equipment assembled and connected by hard-piping or ductwork, used to process raw materials and to manufacture a thermoplastic product as its primary product. This collection of equipment includes unit operations; recovery operations equipment, process vents; equipment identified in § 63.149; storage vessels, as determined in § 63.1310(g); and the equipment that is subject to the equipment leak provisions as specified in § 63.1331. Utilities, lines and equipment not containing process fluids, and other non-process lines, such as heating and cooling systems which do not combine their materials with those in the processes they serve, are not part of the thermoplastic product process unit. A thermoplastic product process unit consists of more than one unit operation.

Total organic compounds (TOC) means those compounds excluding methane and ethane measured according to the procedures of Method 18 or Method 25A, 40 CFR part 60, appendix A.

Total resource effectiveness index value or TRE index value means a measure of the supplemental total resource requirement per unit reduction organic HAP associated with a continuous process vent stream, based on vent stream flow rate, emission rate of organic HAP, net heating value, and corrosion properties (whether or not the continuous process vent stream contains halogenated compounds), as quantified by the equations given under § 63.115.

Vent stream, as used in reference to batch process vents, continuous process vents, and aggregate batch vent streams, means the emissions from one or more process vents.

Waste management unit is defined in § 63.111, except that where the definition in § 63.111 uses the term ''chemical manufacturing process unit,'' the term ''TPPU'' shall apply for purposes of this subpart.

Wastewater means water that:

(1) Contains either:

(i) An annual average concentration of organic HAP listed on Table 6 of this subpart, except for ethylene glycol, of at least 5 parts per million by weight and has an annual average flow rate of 0.02 liter per minute or greater; or

(ii) An annual average concentration of organic HAP listed on Table 6 of this subpart, except for ethylene glycol, of at least 10,000 parts per million by weight at any flow rate; and

(2) Is discarded from a TPPU that is part of an affected source. Wastewater

is process wastewater or maintenance wastewater.

Wastewater stream means a stream that contains wastewater as defined in this section.

[61 FR 48229, Sept. 12, 1996, as amended at 64 FR 11547, Mar. 9, 1999; 65 FR 38102, June 19, 2000; 66 FR 36937, July 16, 2001]

§63.1313 Emission standards.

(a) Except as allowed under paragraphs (b) through (d) of this section, the owner or operator of an existing or new affected source shall comply with the provisions in:

(1) Section 63.1314 for storage vessels;

(2) Section 63.1315, or §§63.1316 through 63.1320, as appropriate, for continuous process vents;

(3) Section 63.1321 for batch process vents;

(4) Section 63.1328 for heat exchange systems;

(5) Section 63.1329 for process contact cooling towers;

(6) Section 63.1330 for wastewater;

(7) Section 63.1331 for equipment leaks;

(8) Section 63.1333 for additional test methods and procedures;

(9) Section 63.1334 for parameter monitoring levels and excursions; and

(10) Section 63.1335 for general recordkeeping and reporting requirements.

(b) When emissions of different kinds (*i.e.*, emissions from continuous process vents subject to either §63.1315 or §§63.1316 through 63.1320, batch process vents, aggregate batch vent streams, storage vessels, process wastewater, and/or in-process equipment subject to §63.149) are combined, and at least one of the emission streams would be classified as Group 1 in the absence of combination with other emission streams, the owner or operator shall comply with the requirements of either paragraph (b)(1) or (b)(2) of this section, as appropriate. For purposes of this paragraph (b), combined emission streams containing one or more batch process vents and containing one or more continuous process vents subject to §63.1315, §63.1316(b)(1)(i)(A), §63.1316(b)(1)(ii), §63.1316(b)(2)(i), §63.1316(b)(2)(ii), or §63.1316(c)(1), excluding §63.1316(c)(1)(ii), may comply with either paragraph (b)(1) or (b)(2) of this section, as appropriate. For purposes of this paragraph (b), the owner or operator of an affected source with combined emission streams containing one or more batch process vents but not containing one or more continuous process vents subject to §63.1315, §63.1316(b)(1)(i)(A), §63.1316(b)(1)(ii), §63.1316(b)(2)(i), §63.1316(b)(2)(ii), or §63.1316(c)(1), excluding §63.1316(c)(1)(ii), shall comply with paragraph (b)(3) of this section.

(1) Comply with the applicable requirements of this subpart for each kind of emission in the stream as specified in paragraphs (a)(1) through (a)(7) of this section.

(2) Comply with the first set of requirements, identified in paragraphs (b)(2)(i) through (b)(2)(vi) of this section, which applies to any individual emission stream that is included in the combined stream, where either that emission stream would be classified as Group 1 in the absence of combination with other emission streams, or the owner or operator chooses to consider that emission stream to be Group 1 for purposes of this paragraph. Compliance with the first applicable set of requirements identified in paragraphs (b)(2)(i) through (b)(2)(vi) of this section constitutes compliance with all other requirements in paragraphs (b)(2)(i) through (b)(2)(vi) of this section applicable to other types of emissions in the combined stream.

(i) The requirements of this subpart for Group 1 continuous process vents subject to §63.1315, including applicable monitoring, recordkeeping, and reporting;

(ii) The requirements of §63.1316(b)(1)(i)(A), §63.1316(b)(1)(ii), §63.1316(b)(2)(i), §63.1316(b)(2)(ii), or §63.1316(c)(1), excluding §63.1316(c)(1)(ii), as appropriate, for control of emissions from continuous process vents subject to the control requirements of §63.1316, including applicable monitoring, recordkeeping, and reporting requirements;

(iii) The requirements of §63.119(e), as specified in §63.1314, for control of emissions from Group 1 storage vessels, including applicable monitoring, recordkeeping, and reporting;

(iv) The requirements of §63.139, as specified in §63.1330, for control devices used to control emissions from waste

management units, including applicable monitoring, recordkeeping, and reporting;

(v) The requirements of § 63.139, as specified in § 63.1330, for closed vent systems for control of emissions from in-process equipment subject to § 63.149, as specified in § 63.1330, including applicable monitoring, recordkeeping, and reporting; or

(vi) The requirements of this subpart for aggregate batch vent streams subject to § 63.1321(c), including applicable monitoring, recordkeeping, and reporting.

(3) The owner or operator of an affected source with combined emission streams containing one or more batch process vents but not containing one or more continuous process vents subject to § 63.1315, § 63.1316(b)(1)(i)(A), § 63.1316(b)(1)(ii), § 63.1316(b)(2)(i), § 63.1316(b)(2)(ii), or § 63.1316(c)(1), excluding § 63.1316(c)(1)(ii), shall comply with paragraph (b)(3)(i) and (b)(3)(ii) of this section.

(i) The owner or operator of the affected source shall comply with § 63.1321 for the batch process vent(s).

(ii) The owner or operator of the affected source shall comply with either paragraph (b)(1) or (b)(2) of this section, as appropriate, for the remaining emission streams.

(c) Instead of complying with §§ 63.1314, 63.1315, 63.1316 through 63.1320, 63.1321, and 63.1330, the owner or operator of an existing affected source may elect to control any or all of the storage vessels, batch process vents, aggregate batch vent streams, continuous process vents, and wastewater streams and associated waste management units within the affected source to different levels using an emissions averaging compliance approach that uses the procedures specified in § 63.1332. The restrictions concerning which emission points may be included in an emissions average, including how many emission points may be included, are specified in § 63.1332(a)(1). An owner or operator electing to use emissions averaging shall still comply with the provisions of §§ 63.1314, 63.1315, 63.1316 through 63.1320, 63.1321, and 63.1330 for affected source emission points not included in the emissions average.

(d) A State may decide not to allow the use of the emissions averaging compliance approach specified in paragraph (c) of this section.

[61 FR 48229, Sept. 12, 1996, as amended at 65 FR 38106, June 19, 2000]

§ 63.1314 Storage vessel provisions.

(a) This section applies to each storage vessel that is assigned to an affected source, as determined by § 63.1310(g). Except as provided in paragraphs (b) through (d) of this section, the owner or operator of an affected source shall comply with the requirements of §§ 63.119 through 63.123 and 63.148 for those storage vessels, with the differences noted in paragraphs (a)(1) through (a)(17) of this section for the purposes of this subpart.

(1) When the term ''storage vessel'' is used in §§ 63.119 through 63.123, the definition of this term in § 63.1312 shall apply for the purposes of this subpart.

(2) When the term ''Group 1 storage vessel'' is used in §§ 63.119 through 63.123, the definition of this term in § 63.1312 shall apply for the purposes of this subpart.

(3) When the term ''Group 2 storage vessel'' is used in §§ 63.119 through 63.123, the definition of this term in § 63.1312 shall apply for the purposes of this subpart.

(4) When the emissions averaging provisions of § 63.150 are referred to in §§ 63.119 and 63.123, the emissions averaging provisions contained in § 63.1332 shall apply for the purposes of this subpart.

(5) When December 31, 1992, is referred to in § 63.119, March 29, 1995 shall apply instead, for the purposes of this subpart.

(6) When April 22, 1994, is referred to in § 63.119, June 19, 2000 shall apply instead, for the purposes of this subpart.

(7) Each owner or operator of an affected source shall comply with this paragraph (a)(7) instead of § 63.120(d)(1)(ii) for the purposes of this subpart. If the control device used to comply with § 63.119(e) is also used to comply with any of the requirements found in § 63.1315, § 63.1316, § 63.1322, or § 63.1330, the performance test required in or accepted by the applicable requirements of §§ 63.1315, 63.1316, 63.1322,

and 63.1330 is acceptable for demonstrating compliance with §63.119(e) for the purposes of this subpart. The owner or operator is not required to prepare a design evaluation for the control device as described in §63.120(d)(1)(i), if the performance test meets the criteria specified in paragraphs (a)(7)(i) and (a)(7)(ii) of this section.

(i) The performance test demonstrates that the control device achieves greater than or equal to the required control efficiency specified in §63.119(e)(1) or §63.119(e)(2), as applicable; and

(ii) The performance test is submitted as part of the Notification of Compliance Status required by §63.1335(e)(5).

(8) When the term ''range'' is used in §§63.120(d)(3), 63.120(d)(5), and 63.122(g)(2), the term ''level'' shall apply instead, for the purposes of this subpart.

(9) For purposes of this subpart, the monitoring plan required by §63.120(d)(2) shall specify for which control devices the owner or operator has selected to follow the procedures for continuous monitoring specified in §63.1334. For those control devices for which the owner or operator has selected to not follow the procedures for continuous monitoring specified in §63.1334, the monitoring plan shall include a description of the parameter or parameters to be monitored to ensure that the control device is being properly operated and maintained, an explanation of the criteria used for selection of that parameter (or parameters), and the frequency with which monitoring will be performed (*e.g.*, when the liquid level in the storage vessel is being raised), as specified in §63.120(d)(2)(i).

(10) For purposes of this subpart, the monitoring plan required by §63.122(b) shall be included in the Notification of Compliance Status required by §63.1335(e)(5).

(11) When the Notification of Compliance Status requirements contained in §63.152(b) are referred to in §§63.120, 63.122, and 63.123, the Notification of Compliance Status requirements contained in §63.1335(e)(5) shall apply for the purposes of this subpart.

(12) When the Periodic Report requirements contained in §63.152(c) are referred to in §§63.120 and 63.122, the Periodic Report requirements contained in §63.1335(e)(6) shall apply for the purposes of this subpart.

(13) When other reports as required in §63.152(d) are referred to in §63.122, the reporting requirements contained in §63.1335(e)(7) shall apply for the purposes of this subpart.

(14) When the Initial Notification requirements contained in §63.151(b) are referred to in §63.122, the owner or operator of an affected source subject to this subpart need not comply for the purposes of this subpart.

(15) When the determination of equivalence criteria in §63.102(b) is referred to in §63.121(a), the provisions in §63.6(g) shall apply for the purposes of this subpart.

(16) When §63.119(a) requires compliance according to the schedule provisions in §63.100, owners and operators of affected sources shall instead comply with the requirements in §§63.119(a)(1) through 63.119(a)(4) by the compliance date for storage vessels, which is specified in §63.1311.

(17) In §63.120(e)(1), instead of the reference to §63.11(b), the requirements of §63.1333(e) shall apply.

(b) Owners or operators of Group 1 storage vessels that are assigned to a new affected source producing SAN using a continuous process shall control emissions to the levels indicated in paragraphs (b)(1) and (b)(2) of this section.

(1) For storage vessels with capacities greater than or equal to 2,271 cubic meters (m^3) containing a liquid mixture having a vapor pressure greater than or equal to 0.5 kilopascal (kPa) but less than 0.7 kPa, emissions shall be controlled by at least 90 percent relative to uncontrolled emissions.

(2) For storage vessels with capacities less than 151 m^3 containing a liquid mixture having a vapor pressure greater than or equal to 10 kPa, emissions shall be controlled by at least 98 percent relative to uncontrolled emissions.

(3) For all other storage vessels designated as Group 1 storage vessels, emissions shall be controlled to the level designated in §63.119.

(c) Owners or operators of Group 1 storage vessels that are assigned to a new or existing affected source producing ASA/AMSAN shall control emissions by at least 98 percent relative to uncontrolled emissions.

(d) The provisions of this subpart do not apply to storage vessels containing ethylene glycol at existing or new affected sources and storage vessels containing styrene at existing affected sources.

[61 FR 48229, Sept. 12, 1996, as amended at 64 FR 11547, Mar. 9, 1999; 65 FR 38107, June 19, 2000]

§ 63.1315 Continuous process vents provisions.

(a) For each continuous process vent located at an affected source, the owner or operator shall comply with the requirements of §§ 63.113 through 63.118, with the differences noted in paragraphs (a)(1) through (a)(18) of this section for the purposes of this subpart, except as provided in paragraphs (b) through (e) of this section.

(1) When the term ''process vent'' is used in §§ 63.113 through 63.118, the term ''continuous process vent,'' and the definition of this term in § 63.1312 shall apply for the purposes of this subpart.

(2) When the term ''Group 1 process vent'' is used in §§ 63.113 through 63.118, the term ''Group 1 continuous process vent,'' and the definition of this term in § 63.1312 shall apply for the purposes of this subpart.

(3) When the term ''Group 2 process vent'' is used in §§ 63.113 through 63.118, the term ''Group 2 continuous process vent,'' and the definition of this term in § 63.1312 shall apply for the purposes of this subpart.

(4) When December 31, 1992 is referred to in § 63.113, apply the date March 29, 1995, for the purposes of this subpart.

(5) When § 63.151(f), alternative monitoring parameters, and § 63.152(e), submission of an operating permit, are referred to in §§ 63.114(c) and 63.117(e), § 63.1335(f), alternative monitoring parameters, and § 63.1335(e)(8), submission of an operating permit, respectively, shall apply for the purposes of this subpart.

(6) When the Notification of Compliance Status requirements contained in § 63.152(b) are referred to in §§ 63.114, 63.117, and 63.118, the Notification of Compliance Status requirements contained in § 63.1335(e)(5) shall apply for the purposes of this subpart.

(7) When the Periodic Report requirements contained in § 63.152(c) are referred to in §§ 63.117 and 63.118, the Periodic Report requirements contained in § 63.1335(e)(6) shall apply for the purposes of this subpart.

(8) When the definition of excursion in § 63.152(c)(2)(ii)(A) is referred to in § 63.118(f)(2), the definition of excursion in § 63.1334(f) of this subpart shall apply for the purposes of this subpart.

(9) When § 63.114(e) or § 63.117(f) specifies that an owner or operator shall submit the information required in § 63.152(b) in order to establish the parameter monitoring range, the owner or operator of an affected source shall comply with the provisions of § 63.1335(e)(5) for purposes of reporting information related to establishment of the parameter monitoring level for purposes of this subpart. Further, the term ''level'' shall apply when the term ''range'' is used in §§ 63.114, 63.117, and 63.118.

(10) When reports of process changes are required under § 63.118(g), (h), (i), or (j), paragraphs (a)(10)(i) through (a)(10)(iv) of this section shall apply for the purposes of this subpart. In addition, for the purposes of this subpart, paragraph (a)(10)(v) of this section applies, and § 63.118(k) does not apply to owners or operators of affected sources.

(i) For the purposes of this subpart, whenever a process change, as defined in § 63.115(e), is made that causes a Group 2 continuous process vent to become a Group 1 continuous process vent, the owner or operator shall submit a report within 180 days after the process change is made or with the next Periodic Report, whichever is later. A description of the process change shall be submitted with the report of the process change, and the owner or operator of the affected source shall comply with the Group 1 provisions in §§ 63.113 through 63.118 in accordance with § 63.1310(i)(2)(ii) or (i)(2)(iii), as applicable.

(ii) Whenever a process change, as defined in § 63.115(e), is made that causes a Group 2 continuous process vent with a TRE greater than 4.0 to become a

Group 2 continuous process vent with a TRE less than 4.0, the owner or operator shall submit a report within 180 days after the process change is made or with the next Periodic Report, whichever is later. A description of the process change shall be submitted with the report of the process change, and the owner or operator shall comply with the provisions in §63.113(d) by the dates specified in §63.1311.

(iii) Whenever a process change, as defined in §63.115(e), is made that causes a Group 2 continuous process vent with a flow rate less than 0.005 standard cubic meter per minute to become a Group 2 continuous process vent with a flow rate of 0.005 standard cubic meter per minute or greater and a TRE index value less than or equal to 4.0, the owner or operator shall submit a report within 180 days after the process change is made or with the next Periodic Report, whichever is later. A description of the process change shall be submitted with the report of the process change, and the owner or operator shall comply with the provisions in §63.113(d) by the dates specified in §63.1311.

(iv) Whenever a process change, as defined in §63.115(e), is made that causes a Group 2 continuous process vent with an organic HAP concentration less than 50 parts per million by volume to become a Group 2 continuous process vent with an organic HAP concentration of 50 parts per million by volume or greater and a TRE index value less than or equal to 4.0, the owner or operator shall submit a report within 180 days after the process change is made or with the next Periodic Report, whichever is later. A description of the process change shall be submitted with the report of the process change, and the owner or operator shall comply with the provisions in §63.113(d) by the dates specified in §63.1311.

(v) The owner or operator is not required to submit a report of a process change if one of the conditions listed in paragraphs (a)(10)(v)(A), (a)(10)(v)(B), (a)(10)(v)(C), or (a)(10)(v)(D) of this section is met.

(A) The process change does not meet the definition of a process change in §63.115(e);

(B) The vent stream flow rate is recalculated according to §63.115(e) and the recalculated value is less than 0.005 standard cubic meter per minute;

(C) The organic HAP concentration of the vent stream is recalculated according to §63.115(e) and the recalculated value is less than 50 parts per million by volume; or

(D) The TRE index value is recalculated according to §63.115(e) and the recalculated value is greater than 4.0, or for the affected sources producing methyl methacrylate butadiene styrene resin the recalculated value is greater than 6.7.

(11) When the provisions of §63.116(c)(3) and (c)(4) specify that Method 18, 40 CFR part 60, appendix A shall be used, Method 18 or Method 25A, 40 CFR part 60, appendix A may be used for the purposes of this subpart. The use of Method 25A, 40 CFR part 60, appendix A shall conform with the requirements in paragraphs (a)(11)(i) and (a)(11)(ii) of this section.

(i) The organic HAP used as the calibration gas for Method 25A, 40 CFR part 60, appendix A shall be the single organic HAP representing the largest percent by volume of the emissions.

(ii) The use of Method 25A, 40 CFR part 60, appendix A is acceptable if the response from the high-level calibration gas is at least 20 times the standard deviation of the response from the zero calibration gas when the instrument is zeroed on the most sensitive scale.

(12) When §63.118, periodic reporting and recordkeeping requirements, refers to §63.152(f), the recordkeeping requirements in §63.1335(d) shall apply for purposes of this subpart.

(13) If a batch process vent or aggregate batch vent stream is combined with a continuous process vent, the owner or operator of the affected source containing the combined vent stream shall comply with paragraph (a)(13)(i); with paragraph (a)(13)(ii) and with paragraph (a)(13)(iii) or (iv); or with paragraph (a)(13)(v) of this section, as appropriate.

(i) If a batch process vent or aggregate batch vent stream is combined with a Group 1 continuous process vent prior to the combined vent stream being routed to a control device, the

owner or operator of the affected source containing the combined vent stream shall comply with the requirements in paragraph (a)(13)(i)(A) or (B) of this section.

(A) All requirements for a Group 1 process vent stream in §§ 63.113 through 63.118, except as otherwise provided in this section. As specified in § 63.1333(a)(1), performance tests shall be conducted at maximum representative operating conditions. For the purpose of conducting a performance test on a combined vent stream, maximum representative operating conditions shall be when batch emission episodes are occurring that result in the highest organic HAP emission rate (for the combined vent stream) that is achievable during one of the periods listed in § 63.1333(a)(1)(i) or § 63.1333(a)(1)(ii), without causing any of the situations described in paragraphs (a)(13)(i)(A)(*1*) through (*3*) to occur.

(*1*) Causing damage to equipment.

(*2*) Necessitating that the owner or operator make product that does not meet an existing specification for sale to a customer; or

(*3*) Necessitating that the owner or operator make product in excess of demand.

(B) Comply with the provisions in § 63.1313(b)(1), as allowed under § 63.1313(b).

(ii) If a batch process vent or aggregate batch vent stream is combined with a continuous process vent prior to the combined vent stream being routed to a recovery device, the TRE index value for the combined vent stream shall be calculated at the exit of the last recovery device. The TRE shall be calculated during periods when one or more batch emission episodes are occurring that result in the highest organic HAP emission rate (in the combined vent stream that is being routed to the recovery device) that is achievable during the 6-month period that begins 3 months before and ends 3 months after the TRE calculation, without causing any of the situations described in paragraphs (a)(13)(ii)(A) through (C) to occur.

(A) Causing damage to equipment.

(B) Necessitating that the owner or operator make product that does not meet an existing specification for sale to a customer; or

(C) Necessitating that the owner or operator make product in excess of demand.

(iii) If the combined vent stream described in paragraph (a)(10)(ii) of this section meets the requirements in paragraphs (a)(13)(iii)(A), (B), and (C) of this section, the combined vent stream shall be subject to the requirements for Group 1 process vents in §§ 63.113 through 63.118, except as otherwise provided in this section, as applicable. Performance tests for the combined vent stream shall be conducted at maximum operating conditions, as described in paragraph (a)(13)(i) of this section.

(A) The TRE index value of the combined stream is less than or equal to 1.0;

(B) The flow rate of the combined vent stream is greater than or equal to 0.005 standard cubic meter per minute; and

(C) The total organic HAP concentration is greater than or equal to 50 parts per million by volume for the combined vent stream.

(iv) If the combined vent stream described in paragraph (a)(10)(ii) of this section meets the requirements in paragraph (a)(13)(iv)(A), (B), or (C) of this section, the combined vent stream shall be subject to the requirements for Group 2 process vents in §§ 63.113 through 63.118, except as otherwise provided in this section, as applicable.

(A) The TRE index value of the combined vent stream is greater than 1.0;

(B) The flow rate of the combined vent stream is less than 0.005 standard cubic meter per minute; or

(C) The total organic HAP concentration is less than 50 parts per million by volume for the combined vent stream.

(v) If a batch process vent or aggregate batch vent stream is combined with a Group 2 continuous process vent, the owner or operator shall comply with the requirements in either paragraph (a)(13)(v)(A) or (a)(13)(v)(B) of this section.

(A) The owner or operator shall comply with the requirements in §§ 63.113 through 63.118 for Group 1 process vents; or

(B) The owner or operator shall comply with §63.1322(e)(2) for batch process vents and aggregate batch vent streams.

(14) If any gas stream that originates outside of an affected source that is subject to this subpart is normally conducted through the same final recovery device as any continuous process vent stream subject to this subpart, the owner or operator of the affected source with the combined vent stream shall comply with all requirements in §§63.113 through 63.118 of subpart G of this part, except as otherwise noted in this section, as applicable.

(i) Instead of measuring the vent stream flow rate at the sampling site specified in §63.115(b)(1), the sampling site for vent stream flow rate shall be prior to the final recovery device and prior to the point at which the gas stream that is not controlled under this subpart is introduced into the combined vent stream.

(ii) Instead of measuring total organic HAP or TOC concentrations at the sampling site specified in §63.115(c)(1), the sampling site for total organic HAP or TOC concentration shall be prior to the final recovery device and prior to the point at which the gas stream that is not controlled under this subpart is introduced into the combined vent stream.

(iii) The efficiency of the final recovery device (determined according to paragraph (a)(14)(iv) of this section) shall be applied to the total organic HAP or TOC concentration measured at the sampling site described in paragraph (a)(14)(ii) of this section to determine the exit concentration. This exit concentration of total organic HAP or TOC shall then be used to perform the calculations outlined in §63.115(d)(2)(iii) and §63.115(d)(2)(iv), for the combined vent stream exiting the final recovery device.

(iv) The efficiency of the final recovery device is determined by measuring the total organic HAP or TOC concentration using Method 18 or 25A, 40 CFR part 60, appendix A, at the inlet to the final recovery device after the introduction of any gas stream that is not controlled under this subpart, and at the outlet of the final recovery device.

(15) When §63.115(c)(3)(ii)(B) and (d)(2)(iv) and §63.116(c)(3)(ii)(B) and (c)(4)(ii)(C) refer to Table 2 of subpart F of this part, the owner or operator is only required to consider organic HAP listed on Table 6 of this subpart for purposes of this subpart.

(16) The compliance date for continuous process vents subject to the provisions of this section is specified in §63.1311.

(17) In §63.116(a), instead of the reference to §63.11(b), the requirements in §63.1333(e) shall apply.

(18) When a combustion device is used to comply with the 20 parts per million by volume outlet concentration standard specified in §63.113(a)(2), the correction to 3 percent oxygen is only required when supplemental combustion air is used to combust the emissions, for the purposes of this subpart. In addition, the correction to 3 percent oxygen specified in §63.116(c)(3) and (c)(3)(iii) is only required when supplemental combustion air is used to combust the emissions, for the purposes of this subpart. Finally, when a combustion device is used to comply with the 20 parts per million by volume outlet concentration standard specified in §63.113(a)(2), an owner or operator shall record and report the outlet concentration required in §63.117(a)(4)(ii) and (a)(4)(iv) corrected to 3 percent oxygen when supplemental combustion air is used to combust the emissions, for the purposes of this subpart. When supplemental combustion air is not used to combust the emissions, an owner or operator may record and report the outlet concentration required in §63.117(a)(4)(ii) and (a)(4)(iv) on an uncorrected basis or corrected to 3 percent oxygen, for the purposes of this subpart.

(b) Owners or operators of existing affected sources producing MBS shall comply with either paragraph (b)(1) or (b)(2) of this section.

(1) Comply with paragraph (a) of this section, as specified in paragraphs (b)(1)(i) and (b)(1)(ii).

(i) As specified in §63.1312, Group 1 continuous process vents at MBS existing affected sources are those with a total resource effectiveness value less than or equal to 3.7.

(ii) When complying with this paragraph (b) and the term ''TRE of 4.0'' is used, or related terms indicating a TRE index value of 4.0, referred to in §§ 63.113 through 63.118, are used, the term ''TRE of 6.7,'' shall apply instead, for the purposes of this subpart. The TRE range of 3.7 to 6.7 for continuous process vents at existing affected sources producing MBS corresponds to the TRE range of 1.0 to 4.0 for other continuous process vents, as it applies to monitoring, recordkeeping, and reporting.

(2) Not allow organic HAP emissions from the collection of continuous process vents at the affected source to be greater than 0.000590 kg organic HAP/Mg of product. Compliance with this paragraph (b)(2) shall be determined using the procedures specified in § 63.1333(b).

(c) Owners or operators of new affected sources producing SAN using a batch process shall comply with the applicable requirements in § 63.1321.

(d) Affected sources producing PET or polystyrene using a continuous process are subject to the emissions control provisions of § 63.1316, the monitoring provisions of § 63.1317, the testing and compliance demonstration provisions of § 63.1318, the recordkeeping provisions of § 63.1319, and the reporting provisions of § 63.1320. However, in some instances as specified in § 63.1316, select continuous process vents present at affected sources producing PET or polystyrene using a continuous process are subject to the provisions of this section.

(e) Owners or operators of affected sources producing ASA/AMSAN shall reduce organic HAP emissions from each continuous process vent, each batch process vent, and each aggregate batch vent stream by 98 weight-percent and shall comply with either paragraph (e)(1), (e)(2), or (e)(3), as appropriate. Where batch process vents or aggregate batch vent streams are combined with continuous process vents, the provisions of paragraph (a)(13) of this section shall apply for the purposes of this paragraph (e).

(1) For each continuous process vent, comply with paragraph (a) of this section as specified in paragraphs (e)(1)(i) through (e)(1)(ii) of this section.

(i) For purpose of this section, each continuous process vent shall be considered to be a Group 1 continuous process vent and the owner or operator of that continuous process vent shall comply with the requirements for a Group 1 continuous process vent.

(ii) For purposes of this section, the group determination procedure required by § 63.115 shall not apply.

(2) For each batch process vent, comply with §§ 63.1321 through 63.1327 as specified in paragraphs (e)(2)(i) through (e)(2)(ii) of this section.

(i) For purpose of this section, each batch process vent shall be considered to be a Group 1 batch process vent and the owner or operator of that batch process vent shall comply with the requirements for a Group 1 batch process vent contained in §§ 63.1321 through 63.1327, except that each batch process vent shall be controlled to reduce organic HAP emissions by 98 weight-percent.

(ii) For purposes of this section, the group determination procedure required by § 63.1323 shall not apply.

(3) For each aggregate batch vent stream, comply with §§ 63.1321 through 63.1327 as specified in paragraphs (e)(3)(i) through (e)(3)(ii) of this section.

(i) For purpose of this section, each aggregate batch vent stream shall be considered to be a Group 1 aggregate batch vent stream and the owner or operator of that aggregate batch vent stream shall comply with the requirements for a Group 1 aggregate batch vent stream contained in §§ 63.1321 through 63.1327, except that each aggregate batch vent stream shall be controlled to reduce organic HAP emissions by 98 weight-percent.

(ii) For purposes of this section, the group determination procedure required by § 63.1323 shall not apply.

[61 FR 48229, Sept. 12, 1996, as amended at 64 FR 11547, Mar. 9, 1999; 65 FR 38107, June 19, 2000; 66 FR 36938, July 16, 2001]

§ 63.1316 PET and polystyrene affected sources—emissions control provisions.

(a) The owner or operator of an affected source producing PET using a continuous process shall comply with paragraph (b) of this section. The

owner or operator of an affected source producing polystyrene using a continuous process shall comply with paragraph (c) of this section. As specified in paragraphs (b) and (c) of this section, owners or operators shall comply with §63.1315 for certain continuous process vents and with §63.1321 for all batch process vents. The owner or operator of an affected source producing PET using a batch process or producing polystyrene using a batch process shall comply with §63.1315 for continuous process vents and with §63.1321 for batch process vents, instead of the provisions of §§63.1316 through 63.1320.

(b) The owner or operator of an affected source producing PET using a continuous process shall comply with the requirements specified in paragraphs (b)(1) or (b)(2) of this section, as appropriate, and are not required to comply with the requirements specified in 40 CFR part 60, subpart DDD. Compliance can be based on either organic HAP or TOC.

(1) The owner or operator of an affected source producing PET using a continuous dimethyl terephthalate process shall comply with paragraphs (b)(1)(i) through (b)(1)(iv) of this section.

(i) The owner or operator of an existing affected source with organic HAP emissions greater than 0.12 kg organic HAP per Mg of product from continuous process vents in the collection of material recovery sections (*i.e.*, methanol recovery) within the affected source shall comply with either paragraph (b)(1)(i)(A), (b)(1)(i)(B), or (b)(1)(i)(C) of this section. Emissions from continuous process vents in the collection of material recovery sections within the affected source shall be determined by the procedures specified in §63.1318(b). The owner or operator of a new affected source shall comply with either paragraph (b)(1)(i)(A), (b)(1)(i)(B), or (b)(1)(i)(C) of this section.

(A) Organic HAP emissions from all continuous process vents in each individual material recovery section shall, as a whole, be no greater than 0.018 kg organic HAP per Mg of product from the associated TPPU(s); or alternatively, organic HAP emissions from all continuous process vents in the collection of material recovery sections within the affected source shall, as a whole, be no greater than 0.018 kg organic HAP per Mg product from all associated TPPU(s);

(B) As specified in §63.1318(d), the owner or operator shall maintain the daily average outlet gas stream temperature from each final condenser in a material recovery section at a temperature of +3 °C (+37 °F) or less (i.e., colder); or

(C) Comply with paragraph (b)(1)(v) of this section.

(ii) Limit organic HAP emissions from continuous process vents in the collection of polymerization reaction sections within the affected source by complying with either paragraph (b)(1)(ii)(A) or (b)(1)(ii)(B) of this section.

(A) Organic HAP emissions from all continuous process vents in each individual polymerization reaction section (including emissions from any equipment used to further recover ethylene glycol, but excluding emissions from process contact cooling towers) shall, as a whole, be no greater than 0.02 kg organic HAP per Mg of product from the associated TPPU(s); or alternatively, organic HAP emissions from all continuous process vents in the collection of polymerization reaction sections within the affected source shall, as a whole, be no greater than 0.02 kg organic HAP per Mg product from all associated TPPU(s); or

(B) Comply with paragraph (b)(1)(v) of this section.

(iii) Continuous process vents not included in a material recovery section, as specified in paragraph (b)(1)(i) of this section, and not included in a polymerization reaction section, as specified in paragraph (b)(1)(ii) of this section, shall comply with §63.1315.

(iv) Batch process vents shall comply with §63.1321.

(v) Comply with one of the following:

(A) Reduce the emissions in a combustion device to achieve 98 weight percent reduction or to achieve a concentration of 20 parts per million by volume (ppmv) on a dry basis, whichever is less stringent. If an owner or operator elects to comply with the 20 ppmv standard, the concentration shall

include a correction to 3 percent oxygen only when supplemental combustion air is used to combust the emissions;

(B) Combust the emissions in a boiler or process heater with a design heat input capacity of 150 million Btu/hr or greater by introducing the emissions into the flame zone of the boiler or process heater; or

(C) Combust the emissions in a flare that complies with the requirements of § 63.1333(e).

(2) The owner or operator of an affected source producing PET using a continuous terephthalic acid process shall comply with paragraphs (b)(2)(i) through (b)(2)(iv) of this section.

(i) Limit organic HAP emissions from continuous process vents in the collection of raw material preparation sections within the affected source by complying with either paragraph (b)(2)(i)(A) or (b)(2)(i)(B) of this section.

(A) Organic HAP emissions from all continuous process vents associated with the esterification vessels in each individual raw materials preparation section shall, as a whole, be no greater than 0.04 kg organic HAP per Mg of product from the associated TPPU(s); or alternatively, organic HAP emissions from all continuous process vents associated with the esterification vessels in the collection of raw material preparation sections within the affected source shall, as a whole, be no greater than 0.04 kg organic HAP per Mg of product from all associated TPPU(s). Other continuous process vents (*i.e.*, those not associated with the esterification vessels) in the collection of raw materials preparation sections within the affected source shall comply with § 63.1315; or

(B) Comply with paragraph (b)(2)(v) of this section.

(ii) Limit organic HAP emissions from continuous process vents in the collection of polymerization reaction sections within the affected source by complying with either paragraph (b)(2)(ii)(A) or (b)(2)(ii)(B) of this section.

(A) Organic HAP emissions from all continuous process vents in each individual polymerization reaction section (including emissions from any equipment used to further recover ethylene glycol, but excluding emissions from process contact cooling towers) shall, as a whole, be no greater than 0.02 kg organic HAP per Mg of product from the associated TPPU(s); or alternatively, organic HAP emissions from all continuous process vents in the collection of polymerization reaction sections within the affected source shall, as a whole, be no greater than 0.02 kg organic HAP per Mg of product from all associated TPPU(s); or

(B) Comply with paragraph (b)(2)(v) of this section.

(iii) Continuous process vents not included in a raw materials preparation section, as specified in paragraphs (b)(2)(i) of this section, and not included in a polymerization reaction section, as specified in paragraph (b)(2)(ii) of this section, shall comply with § 63.1315.

(iv) Batch process vents shall comply with § 63.1321.

(v) Comply with one of the following:

(A) Reduce the emissions in a combustion device to achieve 98 weight percent reduction or to achieve a concentration of 20 parts per million by volume (ppmv) on a dry basis, whichever is less stringent. If an owner or operator elects to comply with the 20 ppmv standard, the concentration shall include a correction to 3 percent oxygen only when supplemental combustion air is used to combust the emissions;

(B) Combust the emissions in a boiler or process heater with a design heat input capacity of 150 million Btu/hr or greater by introducing the emissions into the flame zone of the boiler or process heater; or

(C) Combust the emissions in a flare that complies with the requirements of § 63.1333(e).

(c) The owner or operator of an affected source producing polystyrene resin using a continuous process shall comply with the requirements specified in paragraphs (c)(1) through (c)(3) of this section, as appropriate, instead of the requirements specified in 40 CFR part 60, subpart DDD. Compliance can be based on either organic HAP or TOC.

(1) Limit organic HAP emissions from continuous process vents in the

collection of material recovery sections within the affected source by complying with either paragraph (c)(1)(i), (c)(1)(ii), or (c)(1)(iii) of this section.

(i) Organic HAP emissions from all continuous process vents in each individual material recovery section shall, as a whole, be no greater than 0.0036 kg organic HAP per Mg of product from the associated TPPU(s); or alternatively, organic HAP emissions from all continuous process vents in the collection of material recovery sections within the affected source shall, as a whole, be no greater than 0.0036 kg organic HAP per Mg of product from all associated TPPU(s);

(ii) As specified in §63.1318(d), the owner or operator shall maintain the daily average outlet gas stream temperature from each final condenser in a material recovery section at a temperature of −25 °C (−13 °F) or less (*i.e.*, colder); or

(iii) Comply with one of the following:

(A) Reduce the emissions in a combustion device to achieve 98 weight percent reduction or to achieve a concentration of 20 parts per million by volume (ppmv) on a dry basis, whichever is less stringent. If an owner or operator elects to comply with the 20 ppmv standard, the concentration shall include a correction to 3 percent oxygen only when supplemental combustion air is used to combust the emissions;

(B) Combust the emissions in a boiler or process heater with a design heat input capacity of 150 million Btu/hr or greater by introducing the emissions into the flame zone of the boiler or process heater; or

(C) Combust the emissions in a flare that complies with the requirements of §63.1333(e).

(2) Limit organic HAP emissions from continuous process vents not included in a material recovery section, as specified in paragraph (c)(1)(i) of this section, by complying with §63.1315.

(3) Batch process vents shall comply with §63.1321.

[61 FR 48229, Sept. 12, 1996, as amended at 64 FR 11548, Mar. 9, 1999; 65 FR 38110, June 19, 2000; 66 FR 36938, July 16, 2001]

§63.1317 PET and polystyrene affected sources—monitoring provisions.

Continuous process vents using a control or recovery device to comply with §63.1316 shall comply with the applicable monitoring provisions specified for continuous process vents in §63.1315(a), except that references to group determinations (*i.e.*, total resource effectiveness) do not apply and owners or operators are not required to comply with §63.113.

[65 FR 38111, June 19, 2000]

§63.1318 PET and polystyrene affected sources—testing and compliance demonstration provisions.

(a) Except as specified in paragraphs (b) through (d) of this section, continuous process vents using a control or recovery device to comply with §63.1316 shall comply with the applicable testing and compliance provisions for continuous process vents specified in §63.1315(a) except that, for purposes of this paragraph (a), references to group determinations (i.e., total resource effectiveness) do not apply and owners or operators are not required to comply with §63.113.

(b) *PET Affected Sources Using a Dimethyl Terephthalate Process—Applicability Determination Procedure.* Owners or operators shall calculate organic HAP emissions from the collection of material recovery sections at an existing affected source producing PET using a continuous dimethyl terephthalate process to determine whether §63.1316(b)(1)(i) is applicable using the procedures specified in either paragraph (b)(1) or (b)(2) of this section.

(1) Use Equation 1 of this subpart to determine mass emissions per mass product as specified in paragraphs (b)(1)(i) and (b)(1)(ii) of this section.

$$ER = \sum_{i=1}^{n} \frac{E_i}{\left(0.001\ P_p\right)} \qquad \text{[Eq. 1]}$$

where:

ER=Emission rate of total organic HAP or TOC, kg/Mg product.

E_i=Emission rate of total organic HAP or TOC in continuous process vent i, kg/hr.

P_p=The rate of polymer produced, kg/hr.

n=Number of continuous process vents in the collection of material recovery sections at the affected source.

0.001=Conversion factor, kg to Mg.

(i) The mass emission rate for each continuous process vent, E_i, shall be determined according to the procedures specified in § 63.116(c)(4). The sampling site for determining whether § 63.1316(b)(1)(i) is applicable shall be at the outlet of the last recovery or control device. When the provisions of § 63.116(c)(4) specify that Method 18, 40 CFR part 60, appendix A shall be used, Method 18 or Method 25A, 40 CFR part 60, appendix A may be used for the purposes of this subpart. The use of Method 25A, 40 CFR part 60, appendix A shall comply with paragraphs (b)(1)(i)(A) and (b)(1)(i)(B) of this section.

(A) The organic HAP used as the calibration gas for Method 25A, 40 CFR part 60, appendix A shall be the single organic HAP representing the largest percent by volume of the emissions.

(B) The use of Method 25A, 40 CFR part 60, appendix A is acceptable if the response from the high-level calibration gas is at least 20 times the standard deviation of the response from the zero calibration gas when the instrument is zeroed on the most sensitive scale.

(ii) The rate of polymer produced, P_p (kg/hr), shall be determined by dividing the weight (kg) of polymer pulled from the process line during the performance test by the number of hours taken to perform the performance test. The weight of polymer pulled shall be determined by direct measurement or by an alternate methodology, such as materials balance. If an alternate methodology is used, a description of the methodology, including all procedures, data, and assumptions shall be submitted as part of the Notification of Compliance Status required by § 63.1335(e)(5).

(2) Use engineering assessment, as described in § 63.1323(b)(6)(i), to demonstrate that mass emissions per mass product are less than or equal to 0.07 kg organic HAP/Mg product. If engineering assessment shows that mass emissions per mass product are greater than 0.07 kg organic HAP/Mg product and the owner or operator wishes to demonstrate that mass emissions per mass product are less than the threshold emission rate of 0.12 kg organic HAP/Mg product, the owner or operator shall use the procedures specified in paragraph (b)(1) of this section.

(c) *Compliance with Mass Emissions per Mass Product Standards.* Owners or operators complying with § 63.1316(b)(1)(i)(A), (b)(1)(ii), (b)(2)(i), (b)(2)(ii), and (c)(1)(i) shall demonstrate compliance with the mass emissions per mass product requirements using the procedures specified in paragraph (b)(1) of this section.

(d) *Compliance with Temperature Limits for Final Condensers.* Owners or operators complying with § 63.1316(b)(1)(i)(B) or § 63.1316(c)(1)(ii) shall demonstrate continuous compliance based on an average exit temperature determined for each operating day. Calculation of the daily average exit temperature shall follow the provisions of § 63.1335(d)(3). The provisions of § 63.1334(f) and (g) shall apply for the purposes of determining whether or not an owner or operator is to be deemed out of compliance for a given operating day.

[61 FR 48229, Sept. 12, 1996, as amended at 65 FR 38111, June 19, 2000; 66 FR 36938, July 16, 2001]

§ 63.1319 PET and polystyrene affected sources—recordkeeping provisions.

(a) Except as specified in paragraphs (b) and (c) of this section, owners or operators using a control or recovery device to comply with § 63.1316 shall comply with the applicable recordkeeping provisions specified in § 63.1315(a), except that, for the purposes of this paragraph (a), references to group determinations (*i.e.*, total resource effectiveness) do not apply, and owners or operators are not required to comply with § 63.113.

(b) *Records Demonstrating Compliance With the Applicability Determination Procedure for PET Affected Sources Using a Dimethyl Terephthalate Process.* Owners or operators complying with § 63.1316(b)(1)(i) by demonstrating that mass emissions per mass product are less than or equal to the level specified in § 63.1316(b)(1)(i) (*i.e.*, 0.12 kg organic

HAP per Mg of product) shall keep the following records.

(1) Results of the mass emissions per mass product calculation specified in §63.1318(b).

(2) Records of any change in process operation that increases the mass emissions per mass product.

(c) *Records Demonstrating Compliance with Temperature Limits for Final Condensers.* Owners or operators of continuous process vents complying with §63.1316(b)(1)(i)(B) or §63.1316(c)(1)(ii) shall keep records of the daily averages required by §63.1318, per the recordkeeping provisions specified in §63.1335(d).

[61 FR 48229, Sept. 12, 1996, as amended at 65 FR 38111, June 19, 2000; 66 FR 36938, July 16, 2001]

§63.1320 PET and polystyrene affected sources—reporting provisions.

(a) Except as specified in paragraph (b) of this section, owners and operators using a control or recovery device to comply with §63.1316 shall comply with the applicable reporting provisions specified in §63.1315(a), except that, for the purposes of this paragraph (a), references to group determinations (*i.e.*, total resource effectiveness) do not apply, and owners or operators are not required to comply with §63.113.

(b) *Reporting for PET Affected Sources Using a Dimethyl Terephthalate Process.* Owners or operators complying with §63.1316 by demonstrating that mass emissions per mass product are less than or equal to the level specified in §63.1316(b)(1)(i) (*i.e.*, 0.12 kg organic HAP per Mg of product) shall comply with paragraphs (b)(1) through (b)(3) of this section.

(1) Include the information specified in §63.1319(b)(2) in each Periodic Report, required by §63.1335(e)(6), as appropriate.

(2) Include the information specified in §63.1319(b)(1) in the Notification of Compliance Status, required by §63.1335(e)(5).

(3) Whenever a process change, as defined in §63.115(e), is made that causes emissions from continuous process vents in the collection of material recovery sections (i.e., methanol recovery) within the affected source to be greater than 0.12 kg organic HAP per Mg of product, the owner or operator shall submit a report within 180 days after the process change is made or the information regarding the process change is known to the owner or operator. This report may be included in the next Periodic Report. The report shall include the information specified in §63.1319(b)(1) and a description of the process change.

[65 FR 38112, June 19, 2000, as amended at 66 FR 36938, July 16, 2001]

§63.1321 Batch process vents provisions.

(a) *Batch process vents.* Except as specified in paragraphs (b) through (d) of this section, owners and operators of new and existing affected sources with batch process vents shall comply with the requirements in §§63.1322 through 63.1327. The batch process vent group status shall be determined in accordance with §63.1323. Owners or operators of batch process vents classified as Group 1 shall comply with the reference control technology requirements for Group 1 batch process vents in §63.1322, the monitoring requirements in §63.1324, the performance test methods and procedures to determine compliance in §63.1325, the recordkeeping requirements in §63.1326, and the reporting requirements in §63.1327. Owners or operators of all Group 2 batch process vents shall comply with the applicable reference control technology requirements in §63.1322, the applicable recordkeeping requirements in §63.1326, and the applicable reporting requirements in §63.1327.

(b) *New SAN batch affected sources.* Owners and operators of new SAN affected sources using a batch process shall comply with the requirements of §63.1322 through §63.1327 for batch process vents and aggregate batch vent streams except as specified in paragraphs (b)(1) through (b)(2) of this section. For continuous process vents, owners and operators shall comply with the requirements of §63.1322 through §63.1327 except as specified in paragraph (b)(3) of this section.

(1) For batch process vents, the determination of group status (i.e., Group 1/Group 2) under §63.1323 is not required.

(2) For batch process vents and aggregate batch vent streams, the control requirements for individual batch process vents or aggregate batch vent streams (e.g., 90 percent emission reduction) as specified in § 63.1322(a)(1), (a)(2), (b)(1), and (b)(2) shall not apply.

(3) Continuous process vents using a control or recovery device to comply with § 63.1322(a)(3) are subject to the applicable requirements in § 63.1315(a), as appropriate, except as specified in paragraphs (b)(3)(i) and (b)(3)(ii) of this section.

(i) Said continuous process vents are not subject to the group determination procedures of § 63.115 for the purposes of this subpart.

(ii) Said continuous process vents are not subject to the reference control technology provisions of § 63.113 for the purposes of this subpart.

(c) *Aggregate batch vent streams.* Aggregate batch vent streams, as defined in § 63.1312, are subject to the control requirements specified in § 63.1322(b), as well as the monitoring, testing, recordkeeping, and reporting requirements specified in §§ 63.1324 through 63.1327 for aggregate batch vent streams.

(d) Owners and operators of affected sources producing ASA/AMSAN shall comply with the provisions of § 63.1315(e).

[61 FR 48229, Sept. 12, 1996, as amended at 64 FR 11549, Mar. 9, 1999; 65 FR 38112, June 19, 2000]

§ 63.1322 Batch process vents—reference control technology.

(a) *Batch process vents.* The owner or operator of a Group 1 batch process vent, as determined using the procedures in § 63.1323, shall comply with the requirements of either paragraph (a)(1) or (a)(2) of this section, except as provided for in paragraph (a)(3) of this section. Compliance may be based on either organic HAP or TOC.

(1) For each batch process vent, reduce organic HAP emissions using a flare.

(i) The owner or operator shall comply with the requirements of § 63.1333(e) for the flare.

(ii) Halogenated batch process vents, as defined in § 63.1312, shall not be vented to a flare.

(2) For each batch process vent, reduce organic HAP emissions for the batch cycle by 90 weight percent using a control device. Owners or operators may achieve compliance with this paragraph (a)(2) through the control of selected batch emission episodes or the control of portions of selected batch emission episodes. Documentation demonstrating how the 90 weight percent emission reduction is achieved is required by § 63.1325(c)(2).

(3) The owner or operator of a new affected source producing SAN using a batch process shall reduce organic HAP emissions from the collection of batch process vents, aggregate batch vent streams, and continuous process vents by 84 weight percent. Compliance with this paragraph (a)(3) shall be demonstrated using the procedures specified in § 63.1333(c).

(b) *Aggregate batch vent streams.* The owner or operator of an aggregate batch vent stream that contains one or more Group 1 batch process vents shall comply with the requirements of either paragraph (b)(1) or (b)(2) of this section, except as provided for in paragraph (b)(3) of this section. Compliance may be based on either organic HAP or TOC.

(1) For each aggregate batch vent stream, reduce organic HAP emissions using a flare.

(i) The owner or operator shall comply with the requirements of § 63.1333(e) for the flare.

(ii) Halogenated aggregate batch vent streams, as defined in § 63.1312, shall not be vented to a flare.

(2) For each aggregate batch vent stream, reduce organic HAP emissions by 90 weight percent or to a concentration of 20 parts per million by volume, whichever is less stringent, on a continuous basis using a control device. For purposes of complying with the 20 parts per million by volume outlet concentration standard, the outlet concentration shall be calculated on a dry basis. When a combustion device is used for purposes of complying with the 20 parts per million by volume outlet concentration standard, the concentration shall be corrected to 3 percent oxygen if supplemental combustion air is used to combust the emissions. If supplemental combustion air

is not used, a correction to 3 percent oxygen is not required.

(3) The owner or operator of a new affected source producing SAN using a batch process shall comply with paragraph (a)(3) of this section.

(c) *Halogenated emissions.* Halogenated Group 1 batch process vents, halogenated aggregate batch vent streams, and halogenated continuous process vents that are combusted as part of complying with paragraph (a)(2), (a)(3), (b)(2), or (b)(3) of this section, as appropriate, shall be controlled according to either paragraph (c)(1) or (c)(2) of this section.

(1) If a combustion device is used to comply with paragraph (a)(2), (a)(3), (b)(2), or (b)(3) of this section for a halogenated batch process vent, halogenated aggregate batch vent stream, or halogenated continuous process vent, said emissions exiting the combustion device shall be ducted to a halogen reduction device that reduces overall emissions of hydrogen halides and halogens by at least 99 percent before discharge to the atmosphere.

(2) A halogen reduction device may be used to reduce the halogen atom mass emission rate of said emissions to less than 3,750 kg/yr for batch process vents or aggregate batch vent streams and to less than 0.45 kilograms per hour for continuous process vents prior to venting to any combustion control device, and thus make the batch process vent, aggregate batch vent stream, or continuous process vent nonhalogenated. The nonhalogenated batch process vent, aggregate batch vent stream, or continuous process vent shall then comply with the requirements of either paragraph (a) or (b) of this section, as appropriate.

(d) If a boiler or process heater is used to comply with the percent reduction requirement specified in paragraph (a)(2), (a)(3), (b)(2), or (b)(3) of this section, the batch process vent, aggregate batch vent stream, or continuous process vent shall be introduced into the flame zone of such a device.

(e) *Combination of batch process vents or aggregate batch vent streams with continuous process vents.* If a batch process vent or aggregate batch vent stream is combined with a continuous process vent, the owner or operator shall determine whether the combined vent stream is subject to the provisions of §§63.1321 through 63.1327 according to paragraphs (e)(1) and (e)(2) of this section.

(1) A batch process vent or aggregate batch vent stream combined with a continuous process vent is not subject to the provisions of §§63.1321 through 63.1327, if the requirements in paragraph (e)(1)(i) and in either paragraph (e)(1)(ii) or (e)(1)(iii) are met.

(i) The only emissions to the atmosphere from the batch process vent or aggregate batch vent stream prior to being combined with the continuous process vent are from equipment subject to §63.1331.

(ii) The batch process vent or aggregate batch vent stream is combined with a Group 1 continuous process vent prior to the combined vent stream being routed to a control device. In this paragraph (e)(1)(ii), the definition of control device as it relates to continuous process vents shall be used. Furthermore, the combined vent stream discussed in this paragraph (e)(1)(ii) shall be subject to §63.1315(a)(13)(i).

(iii) The batch process vent or aggregate batch vent stream is combined with a continuous process vent prior to being routed to a recovery device. In this paragraph (e)(1)(iii), the definition of recovery device as it relates to continuous process vents shall be used. Furthermore, the combined vent stream discussed in this paragraph (e)(1)(iii) shall be subject to §63.1315(a)(13)(ii).

(2) If the batch process vent or aggregate batch vent stream is combined with a Group 2 continuous process vent, the group status of the batch process vent shall be determined prior to its combination with the Group 2 continuous process vent, in accordance with §63.1323, and the combined vent stream shall be subject to the requirements for aggregate batch vent streams in §§63.1321 through 63.1327.

(f) *Group 2 batch process vents with annual emissions greater than or equal to the level specified in §63.1323(d).* The owner or operator of a Group 2 batch process vent with annual emissions

greater than or equal to the level specified in § 63.1323(d) shall comply with the provisions of paragraph (f)(1), (f)(2), or (h) of this section.

(1) The owner or operator of an affected source shall comply with the requirements in paragraphs (f)(1)(i) through (f)(1)(iv) of this section.

(i) The owner or operator shall establish a batch mass input limitation that ensures the Group 2 batch process vent does not become a Group 1 batch process vent.

(ii) Over the course of the affected source's ''year,'' as reported in the Notification of Compliance Status in accordance with § 63.1335(e)(5)(viii), the owner or operator shall not charge a mass of HAP or material to the batch unit operation that is greater than the level established as the batch mass input limitation.

(iii) The owner or operator shall comply with the recordkeeping requirements in § 63.1326(d)(2), and the reporting requirements in § 63.1327(a)(3), (b), and (c).

(iv) The owner or operator shall comply with § 63.1323(i) when process changes are made.

(2) Comply with the requirements of this subpart for Group 1 batch process vents.

(g) *Group 2 batch process vents with annual emissions less than the level specified in § 63.1323(d).* The owner or operator of a Group 2 batch process vent with annual emissions less than the level specified in § 63.1323(d) shall comply with paragraphs (g)(1), (g)(2), (g)(3), or (g)(4) of this section.

(1) The owner or operator of the affected source shall comply with the requirements in paragraphs (g)(1)(i) through (g)(1)(iv) of this section.

(i) The owner or operator shall establish a batch mass input limitation that ensures emissions do not exceed the level specified in § 63.1323(d).

(ii) Over the course of the affected source's ''year,'' as reported in the Notification of Compliance Status in accordance with § 63.1335(e)(5)(viii), the owner or operator shall not charge a mass of HAP or material to the batch unit operation that is greater than the level established as the batch mass input limitation.

(iii) The owner or operator shall comply with the recordkeeping requirements in § 63.1326(d)(1), and the reporting requirements in § 63.1327(a)(2), (b), and (c).

(iv) The owner or operator of the affected source shall comply with § 63.1323(i) when process changes are made.

(2) Comply with the requirements of paragraph (f)(1) of this section;

(3) Comply with the requirements of paragraph (f)(2) of this section; or

(4) Comply with the requirements of paragraph (h) of this section.

(h) Owners or operators of Group 2 batch process vents are not required to establish a batch mass input limitation if the batch process vent is Group 2 at the conditions specified in paragraphs (h)(1) and (h)(2) of this section and if the owner or operator complies with the recordkeeping provisions in §§ 63.1326(a)(1) through (3), 63.1326(a)(9), and 63.1326(a)(4) through (6) as applicable, and the reporting requirements in § 63.1327(a)(5), (a)(6), and (b).

(1) Emissions for the single highest-HAP recipe (considering all products that are produced in the batch unit operation) are used in the group determination; and

(2) The group determination assumes that the batch unit operation is operating at the maximum design capacity of the TPPU for 12 months.

[61 FR 48229, Sept. 12, 1996, as amended at 64 FR 11549, Mar. 9, 1999; 65 FR 38112, June 19, 2000; 66 FR 36938, July 16, 2001]

§ 63.1323 Batch process vents—methods and procedures for group determination.

(a) *General requirements.* Except as provided in paragraph (a)(3) of this section and in § 63.1321(b)(1), the owner or operator of batch process vents at affected sources shall determine the group status of each batch process vent in accordance with the provisions of this section. This determination may be based on either organic HAP or TOC emissions.

(1) The procedures specified in paragraphs (b) through (g) of this section shall be followed to determine the group status of each batch process vent. This determination shall be made

in accordance with either paragraph (a)(1)(i) or (a)(1)(ii) of this section.

(i) An owner or operator may choose to determine the group status of a batch process vent based on the expected mix of products. For each product, emission characteristics of the single highest-HAP recipe, as defined in paragraph (a)(1)(iii) of this section, for that product shall be used in the procedures in paragraphs (b) through (i) of this section.

(ii) An owner or operator may choose to determine the group status of a batch process vent based on annualized production of the single highest-HAP recipe, as defined in paragraph (a)(1)(iii) of this section, considering all products produced or processed in the batch unit operation. The annualized production of the highest-HAP recipe shall be based exclusively on the production of the single highest-HAP recipe of all products produced or processed in the batch unit operation for a 12 month period. The production level used may be the actual production rate. It is not necessary to assume a maximum production rate (*i.e.*, 8,760 hours per year at maximum design production).

(iii) The single highest-HAP recipe for a product means the recipe of the product with the highest total mass of HAP charged to the reactor during the production of a single batch of product.

(2) The annual uncontrolled organic HAP or TOC emissions and annual average batch vent flow rate shall be determined at the exit from the batch unit operation. For the purposes of these determinations, the primary condenser operating as a reflux condenser on a reactor or distillation column, the primary condenser recovering monomer, reaction products, by-products, or solvent from a stripper operated in batch mode, and the primary condenser recovering monomer, reaction products, by-products, or solvent from a distillation operation operated in batch mode shall be considered part of the batch unit operation. All other devices that recover or oxidize organic HAP or TOC vapors shall be considered control devices as defined in §63.1312.

(3) The owner or operator of a batch process vent complying with the flare provisions in §63.1322(a)(1) or §63.1322(b)(1) or routing the batch process vent to a control device to comply with the requirements in §63.1322(a)(2) or §63.1322(b)(2) is not required to perform the batch process vent group determination described in this section, but shall comply with all requirements applicable to Group 1 batch process vents for said batch process vent.

(b) *Determination of annual emissions.* The owner or operator shall calculate annual uncontrolled TOC or organic HAP emissions for each batch process vent using the methods described in paragraphs (b)(1) through (b)(8) of this section. To estimate emissions from a batch emissions episode, owners or operators may use either the emissions estimation equations in paragraphs (b)(1) through (b)(4) of this section, or direct measurement as specified in paragraph (b)(5) of this section. Engineering assessment may be used to estimate emissions from a batch emission episode only under the conditions described in paragraph (b)(6) of this section. In using the emissions estimation equations in paragraphs (b)(1) through (b)(4) of this section, individual component vapor pressure and molecular weight may be obtained from standard references. Methods to determine individual HAP partial pressures in multicomponent systems are described in paragraph (b)(9) of this section. Other variables in the emissions estimation equations may be obtained through direct measurement, as defined in paragraph (b)(5) of this section, through engineering assessment, as defined in paragraph (b)(6)(ii) of this section, by process knowledge, or by any other appropriate means. Assumptions used in determining these variables must be documented. Once emissions for the batch emission episode have been determined using either the emissions estimation equations, direct measurement, or engineering assessment, emissions from a batch cycle shall be calculated in accordance with paragraph (b)(7) of this section, and annual emissions from the batch process vent shall be calculated in accordance with paragraph (b)(8) of this section.

(1) TOC or organic HAP emissions from the purging of an empty vessel shall be calculated using Equation 2 of this subpart. Equation 2 of this subpart

does not take into account evaporation of any residual liquid in the vessel.

$$E_{episode} = \frac{(V_{ves})(P)(MW_{wavg})}{RT}\left(1 - 0.37^{m}\right) \qquad \text{[Eq. 2]}$$

Where:

$E_{episode}$ = Emissions, kg/episode.
V_{ves} = Volume of vessel, m^3.
P = TOC or total organic HAP partial pressure, kPa.
MW_{wavg} = Weighted average molecular weight of TOC or organic HAP in vapor, determined in accordance with paragraph (b)(4)(i)(D) of this section, kg/kmol.
R = Ideal gas constant, 8.314 $m^3 \cdot kPa/kmol \cdot K$.
T = Temperature of vessel vapor space, K.
m = Number of volumes of purge gas used.

(2) TOC or organic HAP emissions from the purging of a filled vessel shall be calculated using Equation 3 of this subpart.

$$E_{episode} = \frac{(y)(V_{dr})(P^2)(MW_{wavg})}{RT\left(P - \sum_{i=1}^{n} P_i x_i\right)}(T_m) \qquad \text{[Eq. 3]}$$

Where:

$E_{episode}$ = Emissions, kg/episode.
y = Saturated mole fraction of all TOC or organic HAP in vapor phase.
V_{dr} = Volumetric gas displacement rate, m^3/min.
P = Pressure in vessel vapor space, kPa.
MW_{wavg} = Weighted average molecular weight of TOC or organic HAP in vapor, determined in accordance with paragraph (b)(4)(i)(D) of this section, kg/kmol.
R = Ideal gas constant, 8.314 $m^3 \cdot kPa/kmol \cdot K$.
T = Temperature of vessel vapor space, K.
P_i = Vapor pressure of TOC or individual organic HAP i, kPa.
x_i = Mole fraction of TOC or organic HAP i in the liquid.
n = Number of organic HAP in stream. Note: Summation not applicable if TOC emissions are being estimated.
T_m = Minutes/episode.

(3) Emissions from vapor displacement due to transfer of material into or out of a vessel shall be calculated using Equation 4 of this subpart.

$$E_{episode} = \frac{(y)(V)(P)(MW_{wavg})}{RT} \qquad \text{[Eq. 4]}$$

where:

$E_{episode}$=Emissions, kg/episode.
y=Saturated mole fraction of all TOC or organic HAP in vapor phase.
V=Volume of gas displaced from the vessel, m^3.
P=Pressure in vessel vapor space, kPa.
MW_{wavg}=Weighted average molecular weight of TOC or organic HAP in vapor, determined in accordance with paragraph (b)(4)(i)(D) of this section, kg/kmol.
R=Ideal gas constant, 8.314 $m^{3\delta}kPa/kmol^{\delta}K$.
T=Temperature of vessel vapor space, K.

(4) Emissions caused by the heating of a vessel shall be calculated using the procedures in either paragraphs (b)(4)(i), (b)(4)(ii), or (b)(4)(iii) of this section, as appropriate.

(i) If the final temperature to which the vessel contents is heated is lower than 50 K below the boiling point of the HAP in the vessel, then emissions shall be calculated using the equations in paragraphs (b)(4)(i)(A) through (b)(4)(i)(D) of this section.

(A) Emissions caused by heating of a vessel shall be calculated using Equation 5 of this subpart. The assumptions

made for this calculation are atmospheric pressure of 760 millimeters of mercury (mm Hg) and the displaced gas is always saturated with volatile organic compounds (VOC) vapor in equilibrium with the liquid mixture.

$$E_{episode} = \left[\frac{\dfrac{\sum_{i=1}^{n} (P_i)_{T1}}{101.325 - \sum_{i=1}^{n} (P_i)_{T1}} + \dfrac{\sum_{i=1}^{n} (P_i)_{T2}}{101.325 - \sum_{i=1}^{n} (P_i)_{T2}}}{2} \right] * (\Delta\eta) \left[\frac{(MW_{WAVG,T1}) + (MW_{WAVG,T2})}{2} \right] \qquad \text{[Eq. 5]}$$

Where:

$E_{episode}$ = Emissions, kg/episode.

$(P_i)_{T1}$, $(P_i)_{T2}$ = Partial pressure (kPa) of TOC or each organic HAP i in the vessel headspace at initial (T1) and final (T2) temperature.

n = Number of organic HAP in stream. Note: Summation not applicable if TOC emissions are being estimated.

$\Delta\eta$ = Number of kilogram-moles (kg-moles) of gas displaced, determined in accordance with paragraph (b)(4)(i)(B) of this section.

101.325 = Constant, kPa.

$(MW_{WAVG,T1})$, $(MW_{WAVG,T2})$ = Weighted average molecular weight of TOC or total organic HAP in the displaced gas stream, determined in accordance with paragraph (b)(4)(i)(D) of this section, kg/kmol.

(B) The moles of gas displaced, $\Delta\eta$, is calculated using Equation 6 of this subpart.

$$\Delta\eta = \frac{V_{fs}}{R} \left[\left(\frac{Pa_1}{T_1} \right) - \left(\frac{Pa_2}{T_2} \right) \right] \qquad \text{[Eq. 6]}$$

Where:

$\Delta\eta$ = Number of kg-moles of gas displaced.

V_{fs} = Volume of free space in the vessel, m^3.

R = Ideal gas constant, 8.314 $m^3 \cdot kPa/kmol \cdot K$.

Pa_1 = Initial noncondensible gas partial pressure in the vessel, kPa.

Pa_2 = Final noncondensible gas partial pressure, kPa.

T_1 = Initial temperature of vessel, K.

T_2 = Final temperature of vessel, K.

(C) The initial and final pressure of the noncondensible gas in the vessel shall be calculated using Equation 7 of this subpart.

$$Pa = 101.325 - \sum_{i=1}^{n} (P_i)_T \qquad \text{[Eq. 7]}$$

Where:

Pa = Initial or final partial pressure of noncondensible gas in the vessel headspace, kPa.

101.325 = Constant, kPa.

$(P_i)T$ = Partial pressure of TOC or each organic HAP i in the vessel headspace, kPa, at the initial or final temperature (T1 or T2).

n = Number of organic HAP in stream. Note: Summation not applicable if TOC emissions are being estimated.

(D) The weighted average molecular weight of TOC or organic HAP in the displaced gas, MW_{wavg}, shall be calculated using Equation 8 of this subpart.

$$MW_{wavg} = \frac{\sum_{i=1}^{n} (\text{mass of C})_i \, (\text{molecular weight of C})_i}{\sum_{i=1}^{n} (\text{mass of C})_i} \qquad \text{[Eq. 8]}$$

where:

C=TOC or organic HAP component

n=Number of TOC or organic HAP components in stream.

(ii) If the vessel contents are heated to a temperature greater than 50 K below the boiling point, then emissions from the heating of a vessel shall be calculated as the sum of the emissions calculated in accordance with paragraphs (b)(4)(ii)(A) and (b)(4)(ii)(B) of this section.

(A) For the interval from the initial temperature to the temperature 50 K below the boiling point, emissions shall be calculated using Equation 5 of this subpart, where T_2 is the temperature 50 K below the boiling point.

(B) For the interval from the temperature 50 K below the boiling point to the final temperature, emissions shall be calculated as the summation of emissions for each 5 K increment, where the emissions for each increment shall be calculated using Equation 5 of this subpart.

(*1*) If the final temperature of the heatup is at or lower than 5 K below the boiling point, the final temperature for the last increment shall be the final temperature for the heatup, even if the last increment is less than 5 K.

(*2*) If the final temperature of the heatup is higher than 5 K below the boiling point, the final temperature for the last increment shall be the temperature 5 K below the boiling point, even if the last increment is less than 5 K.

(*3*) If the vessel contents are heated to the boiling point and the vessel is not operating with a condenser, the final temperature for the final increment shall be the temperature 5 K below the boiling point, even if the last increment is less than 5 K.

(iii) If the vessel is operating with a condenser, and the vessel contents are heated to the boiling point, the primary condenser, as specified in paragraph (a)(2) of this section, is considered part of the process. Emissions shall be calculated as the sum of emissions calculated using Equation 5 of this subpart, which calculates emissions due to heating the vessel contents to the temperature of the gas existing the condenser, and emissions calculated using Equation 4 of this subpart, which calculates emissions due to the displacement of the remaining saturated noncondensible gas in the vessel. The final temperature in Equation 5 of this subpart shall be set equal to the exit gas temperature of the condenser. Equation 4 of this subpart shall be used as written below in Equation 4a of this subpart, using free space volume, and T is set equal to the condenser exit gas temperature.

$$E_{episode} = \frac{(y)(V_{fs})(P)(MW_{wavg})}{RT} \quad \text{[Eq. 4a]}$$

where:

$E_{episode}$=Emissions, kg/episode.

y=Saturated mole fraction of all TOC or organic HAP in vapor phase.

V_{fs}=Volume of the free space in the vessel, m^3.

P=Pressure in vessel vapor space, kPa.

MW_{wavg}=Weighted average molecular weight of TOC or organic HAP in vapor, determined in accordance with paragraph (b)(4)(i)(D) of this section, kg/kmol.

R=Ideal gas constant, 8.314 $m^{3\delta}kPa/kmol^{\delta}K$.

T=Temperature of condenser exit stream, K.

(5) The owner or operator may estimate annual emissions for a batch emission episode by direct measurement. If direct measurement is used, the owner or operator shall either perform a test for the duration of a representative batch emission episode or perform a test during only those periods of the batch emission episode for which the emission rate for the entire episode can be determined or for which the emissions are greater than the average emission rate of the batch emission episode. The owner or operator choosing either of these options shall develop an emission profile for the entire batch emission episode, based on either process knowledge or test data collected, to demonstrate that test periods are representative. Examples of information that could constitute process knowledge include calculations based on material balances and process stoichiometry. Previous test results may be used provided the results are still relevant to the current batch process vent conditions. Performance

tests shall follow the procedures specified in paragraphs (b)(5)(i) through (b)(5)(iii) of this section. The procedures in either paragraph (b)(5)(iv) or (b)(5)(v) of this section shall be used to calculate the emissions per batch emission episode.

(i) Method 1 or 1A, 40 CFR part 60, appendix A as appropriate, shall be used for selection of the sampling sites if the flow measuring device is a pitot tube. No traverse is necessary when Method 2A or 2D, 40 CFR part 60, appendix A is used to determine gas stream volumetric flow rate.

(ii) Annual average batch vent flow rate shall be determined as specified in paragraph (e) of this section.

(iii) Method 18 or Method 25A, 40 CFR part 60, appendix A, shall be used to determine the concentration of TOC or organic HAP, as appropriate. Alternatively, any other method or data that has been validated according to the applicable procedures in Method 301 of appendix A of this part may be used. The use of Method 25A, 40 CFR part 60, appendix A shall conform with the requirements in paragraphs (b)(5)(iii)(A) and (b)(5)(iii)(B) of this section.

(A) The organic HAP used as the calibration gas for Method 25A, 40 CFR part 60, appendix A shall be the single organic HAP representing the largest percent by volume of the emissions.

(B) The use of Method 25A, 40 CFR part 60, appendix A is acceptable if the response from the high-level calibration gas is at least 20 times the standard deviation of the response from the zero calibration gas when the instrument is zeroed on the most sensitive scale.

(iv) If an integrated sample is taken over the entire batch emission episode to determine the average batch vent concentration of TOC or total organic HAP, emissions shall be calculated using Equation 9 of this subpart.

$$E_{episode} = K\left[\sum_{j=1}^{n}\left(C_j\right)\left(M_j\right)\right]AFR\left(T_h\right) \qquad \text{[Eq. 9]}$$

Where:

$E_{episode}$ = Emissions, kg/episode.

K = Constant, 2.494×10^{-6} $(ppmv)^{-1}$ (gm-mole/scm) (kg/gm) (min/hr), where standard temperature is 20 °C.

C_j = Average batch vent concentration of TOC or sample organic HAP component j of the gas stream, dry basis, ppmv.

M_j = Molecular weight of TOC or sample organic HAP component j of the gas stream, gm/gm-mole.

AFR = Average batch vent flow rate of gas stream, dry basis, scmm.

T_h = Hours/episode

n = Number of organic HAP in stream. Note: Summation not applicable if TOC emissions are being estimated using a TOC concentration measured using Method 25A, 40 CFR part 60, appendix A.

(v) If grab samples are taken to determine the average batch vent concentration of TOC or total organic HAP, emissions shall be calculated according to paragraphs (b)(5)(v)(A) and (b)(5)(v)(B) of this section.

(A) For each measurement point, the emission rate shall be calculated using Equation 10 of this subpart.

$$E_{point} = K\left[\sum_{j=1}^{n} C_j M_j\right]FR \qquad \text{[Eq. 10]}$$

Where:

E_{point} = Emission rate for individual measurement point, kg/hr.

K = Constant, $2.494 \times 10- -^{6}$ $(ppmv)^{-1}$ (gm-mole/scm) (kg/gm) (min/hr), where standard temperature is 20 °C.

C_j = Concentration of TOC or sample organic HAP component j of the gas stream, dry basis, ppmv.

M_j = Molecular weight of TOC or sample organic HAP component j of the gas stream, gm/gm-mole.

FR = Flow rate of gas stream for the measurement point, dry basis, scmm.

n = Number of organic HAP in stream. Note: Summation not applicable if TOC emissions are being estimated using a TOC concentration measured using Method 25A, 40 CFR part 60, appendix A.

(B) The emissions per batch emission episode shall be calculated using Equation 11 of this subpart.

$$E_{episode} = (DUR)\left[\sum_{i=1}^{n} \frac{E_i}{n}\right] \qquad [Eq. 11]$$

where:

$E_{episode}$=Emissions, kg/episode.

DUR=Duration of the batch emission episode, hr/episode.

E_i=Emissions for measurement point i, kg/hr.

n=Number of measurements.

(6) Engineering assessment may be used to estimate emissions from a batch emission episode, if the criteria in paragraph (b)(6)(i) are met. Data or other information used to demonstrate that the criteria in paragraph (b)(6)(i) of this section have been met shall be reported as specified in paragraph (b)(6)(iii) of this section. Paragraph (b)(6)(ii) of this section defines engineering assessment, for the purposes of estimating emissions from a batch emissions episode. All data, assumptions, and procedures used in an engineering assessment shall be documented.

(i) If the criteria specified in paragraph (b)(6)(i)(A), (B), or (C) are met for a specific batch emission episode, the owner or operator may use engineering assessment, as described in paragraph (b)(6)(ii) of this section, to estimate emissions from that batch emission episode, and the owner or operator is not required to use the emissions estimation equations described in paragraphs (b)(1) through (b)(4) of this section to estimate emissions from that batch emission episode.

(A) Previous test data, where the measurement of organic HAP or TOC emissions was an outcome of the test, show a greater than 20 percent discrepancy between the test value and the value estimated using the applicable equations in paragraphs (b)(1) through (b)(4) of this section. Paragraphs (b)(6)(i)(A)(*1*) and (*2*) of this section describe test data that will be acceptable under this paragraph (b)(6)(i)(A).

(*1*) Test data for the batch emission episode obtained during production of the product for which the demonstration is being made.

(*2*) Test data obtained for a batch emission episode from another process train, where the test data were obtained during production of the product for which the demonstration is being made. Test data from another process train may be used only if the owner or operator can demonstrate that the data are representative of the batch emission episode for which the demonstration is being made, taking into account the nature, size, operating conditions, production rate, and sequence of process steps (*e.g.*, reaction, distillation, etc.) of the equipment in the other process train.

(B) Previous test data obtained during the production of the product for which the demonstration is being made, for the batch emission episode with the highest organic HAP emissions on a mass basis, show a greater than 20 percent discrepancy between the test value and the value estimated using the applicable equations in paragraphs (b)(1) through (b)(4) of this section. If the criteria in this paragraph (b)(6)(i)(B) are met, then engineering assessment may be used for all batch emission episodes associated with that batch cycle for the batch unit operation.

(C) The owner or operator has requested and been granted approval to use engineering assessment to estimate emissions from a batch emissions episode. The request to use engineering assessment to estimate emissions from a batch emissions episode shall contain sufficient information and data to demonstrate to the Administrator that engineering assessment is an accurate means of estimating emissions for that particular batch emissions episode. The request to use engineering assessment to estimate emissions for a batch emissions episode shall be submitted in the Precompliance Report required under § 63.1335(e)(3).

(ii) Engineering assessment includes, but is not limited to, the following:

(A) Previous test results, provided the tests are representative of current operating practices;

(B) Bench-scale or pilot-scale test data obtained under conditions representative of current process operating conditions;

(C) Flow rate, TOC emission rate, or organic HAP emission rate specified or implied within a permit limit applicable to the batch process vent; and

(D) Design analysis based on accepted chemical engineering principles, measurable process parameters, or physical or chemical laws or properties. Examples of analytical methods include, but are not limited to:

(*1*) Use of material balances;

(*2*) Estimation of flow rate based on physical equipment design such as pump or blower capacities;

(*3*) Estimation of TOC or organic HAP concentrations based on saturation conditions; and

(*4*) Estimation of TOC or organic HAP concentrations based on grab samples of the liquid or vapor.

(iii) Data or other information used to demonstrate that the criteria in paragraph (b)(6)(i) of this section have been met shall be reported as specified in paragraphs (b)(6)(iii)(A) and (b)(6)(iii)(B) of this section.

(A) Data or other information used to demonstrate that the criteria in paragraph (b)(6)(i)(A) or (b)(6)(i)(B) of this section have been met shall be reported in the Notification of Compliance Status, as required in §63.1327(a)(6).

(B) The request for approval to use engineering assessment to estimate emissions from a batch emissions episode as allowed under paragraph (b)(6)(i)(C) of this section, and sufficient data or other information for demonstrating to the Administrator that engineering assessment is an accurate means of estimating emissions for that particular batch emissions episode shall be submitted with the Precompliance Report, as required in §63.1335(e)(3).

(7) For each batch process vent, the TOC or organic HAP emissions associated with a single batch cycle shall be calculated using Equation 12 of this subpart.

$$E_{cycle} = \sum_{i=1}^{n} E_{episode_i} \qquad [\text{Eq. } 12]$$

where:

E_{cycle}=Emissions for an individual batch cycle, kg/batch cycle

$E_{episode\ i}$=Emissions from batch emission episode i, kg/episode

n=Number of batch emission episodes for the batch cycle

(8) Annual TOC or organic HAP emissions from a batch process vent shall be calculated using Equation 13 of this subpart.

$$AE = \sum_{i=1}^{n} \left(N_i\right)\left(E_{cycle_i}\right) \qquad [\text{Eq. } 13]$$

where:

AE=Annual emissions from a batch process vent, kg/yr.

N_i=Number of type i batch cycles performed annually, cycles/year

$E_{cycle\ i}$=Emissions from the batch process vent associated with a single type i batch cycle, as determined in paragraph (b)(7) of this section, kg/batch cycle

n=Number of different types of batch cycles that cause the emission of TOC or organic HAP from the batch process vent

(9) Individual HAP partial pressures in multicomponent systems shall be determined using the appropriate method specified in paragraphs (b)(9)(i) through (b)(9)(iii) of this section.

(i) If the components are miscible, use Raoult's law to calculate the partial pressures;

(ii) If the solution is a dilute aqueous mixture, use Henry's law constants to calculate partial pressures;

(iii) If Raoult's law or Henry's law are not appropriate or available, the owner or operator may use any of the options in paragraphs (b)(9)(iii)(A), (B), or (C) of this section.

(A) Experimentally obtained activity coefficients, Henry's law constants, or solubility data;

(B) Models, such as group-contribution models, to predict activity coefficients; or

(C) Assume the components of the system behave independently and use the summation of all vapor pressures from the HAPs as the total HAP partial pressure.

(c) [Reserved]

(d) *Minimum emission level exemption.* A batch process vent with annual emissions of TOC or organic HAP less than 11,800 kg/yr is considered a Group 2 batch process vent and the owner or operator of said batch process vent

shall comply with the requirements in § 63.1322(f) or (g). Annual emissions of TOC or organic HAP are determined at the exit of the batch unit operation, as described in paragraph (a)(2) of this section, and are determined as specified in paragraph (b) of this section. The owner or operator of said batch process vent is not required to comply with the provisions in paragraphs (e) through (g) of this section.

(e) *Determination of average batch vent flow rate and annual average batch vent flow rate.* The owner or operator shall determine the average batch vent flow rate for each batch emission episode in accordance with one of the procedures provided in paragraphs (e)(1) through (e)(2) of this section. The annual average batch vent flow rate for a batch process vent shall be calculated as specified in paragraph (e)(3) of this section.

(1) Determination of the average batch vent flow rate for a batch emission episode by direct measurement shall be made using the procedures specified in paragraphs (e)(1)(i) through (e)(1)(iii) of this section.

(i) The volumetric flow rate (FR_i) for a batch emission episode, in standard cubic meters per minute (scmm) at 20 °C, shall be determined using Method 2, 2A, 2C, or 2D, 40 CFR part 60, appendix A, as appropriate.

(ii) The volumetric flow rate of a representative batch emission episode shall be measured every 15 minutes.

(iii) The average batch vent flow rate for a batch emission episode shall be calculated using Equation 14 of this subpart.

$$AFR_{episode} = \frac{\sum_{i=1}^{n} FR_i}{n} \qquad \text{[Eq. 14]}$$

Where:

$AFR_{episode}$ = Average batch vent flow rate for the batch emission episode, scmm.

FR_i = Flow rate for individual measurement i, scmm.

n = Number of flow rate measurements taken during the batch emission episode.

(2) The average batch vent flow rate for a batch emission episode may be determined by engineering assessment, as defined in paragraph (b)(6)(i) of this section. All data, assumptions, and procedures used shall be documented.

(3) The annual average batch vent flow rate for a batch process vent shall be calculated using Equation 15 of this subpart.

$$AFR = \frac{\sum_{i=1}^{n} (DUR_i)(AFR_{episode,\,i})}{\sum_{i=1}^{n} (DUR_i)} \qquad \text{[Eq. 15]}$$

Where:

AFR = Annual average batch vent flow rate for the batch process vent, scmm.

DUR_i = Duration of type i batch emission episodes annually, hrs/yr.

$AFR_{episode,i}$ = Average batch vent flow rate for type i batch emission episode, scmm.

n = Number of types of batch emission episodes venting from the batch process vent.

(f) *Determination of cutoff flow rate.* For each batch process vent, the owner or operator shall calculate the cutoff flow rate using Equation 16 of this subpart.

$$CFR = (0.00437)\,(AE) - 51.6 \qquad \text{[Eq. 16]}$$

where:

CFR = Cutoff flow rate, scmm.

AE = Annual TOC or organic HAP emissions, as determined in paragraph (b)(8) of this section, kg/yr.

(g) *Group 1/Group 2 status determination.* The owner or operator shall compare the cutoff flow rate, calculated in accordance with paragraph (f) of this section, with the annual average batch

vent flow rate, determined in accordance with paragraph (e)(3) of this section. The group determination status for each batch process vent shall be made using the criteria specified in paragraphs (g)(1) and (g)(2) of this section.

(1) If the cutoff flow rate is greater than or equal to the annual average batch vent flow rate of the stream, the batch process vent is classified as a Group 1 batch process vent.

(2) If the cutoff flow rate is less than the annual average batch vent flow rate of the stream, the batch process vent is classified as a Group 2 batch process vent.

(h) *Determination of halogenation status.* To determine whether a batch process vent or an aggregate batch vent stream is halogenated, the annual mass emission rate of halogen atoms contained in organic compounds shall be calculated using the procedures specified in paragraphs (h)(1) through (h)(3) of this section.

(1) The concentration of each organic compound containing halogen atoms (ppmv, by compound) for each batch emission episode shall be determined after the last recovery device (if any recovery devices are present), based on any one of the following procedures:

(i) Process knowledge that no halogens or hydrogen halides are present in the process may be used to demonstrate that a batch emission episode is nonhalogenated. Halogens or hydrogen halides that are unintentionally introduced into the process shall not be considered in making a finding that a batch emission episode is nonhalogenated.

(ii) Engineering assessment as discussed in paragraph (b)(6)(i) of this section.

(iii) Average concentration of organic compounds containing halogens and hydrogen halides as measured by Method 26 or 26A, 40 CFR part 60, appendix A.

(iv) Any other method or data that has been validated according to the applicable procedures in Method 301 of appendix A of this part.

(2) The annual mass emissions of halogen atoms for a batch process vent shall be calculated using Equation 17 of this subpart.

$$E_{halogen} = K\left[\sum_{j=1}^{n}\sum_{i=1}^{m}\left(C_{avg_j}\right)\left(L_{j,i}\right)\left(M_{j,i}\right)\right]AFR \qquad \text{[Eq. 17]}$$

Where:

$E_{halogen}$ = Mass of halogen atoms, dry basis, kg/yr.

K = Constant, 0.022 $(ppmv)^{-1}$ (kg-mole per scm) (minute/yr), where standard temperature is 20 °C.

AFR = Annual average batch vent flow rate of the batch process vent, determined according to paragraph (e) of this section, scmm.

$M_{j,i}$ = Molecular weight of halogen atom i in compound j, kg/kg-mole.

$L_{j,i}$ = Number of atoms of halogen i in compound j.

n = Number of halogenated compounds j in the batch process vent.

m = Number of different halogens i in each compound j of the batch process vent.

C_{avg_j} = Annual average batch vent concentration of halogenated compound j in the batch process vent as determined by using Equation 18 of this subpart, dry basis, ppmv.

$$C_{avg_j} = \frac{\sum_{i=1}^{n}\left(DUR_i\right)\left(C_i\right)}{\sum_{i=1}^{n}\left(DUR_i\right)} \qquad \text{[Eq. 18]}$$

Where:

DUR_i = Duration of type i batch emission episodes annually, hrs/yr.

C_i = Average batch vent concentration of halogenated compound j in type i batch emission episode, ppmv.

n = Number of types of batch emission episodes venting from the batch process vent.

(3) The annual mass emissions of halogen atoms for an aggregate batch vent stream shall be the sum of the annual mass emissions of halogen atoms

for all batch process vents included in the aggregate batch vent stream.

(i) *Process changes affecting Group 2 batch process vents.* Whenever process changes, as described in paragraph (i)(1) of this section, are made that affect one or more Group 2 batch process vents and that could reasonably be expected to change one or more Group 2 batch process vents to Group 1 batch process vents or that could reasonably be expected to reduce the batch mass input limitation for one or more Group 2 batch process vents, the owner or operator shall comply with paragraphs (i)(2) and (3) of this section.

(1) Examples of process changes include the changes listed in paragraphs (i)(1)(i), (i)(1)(ii), and (i)(1)(iii) of this section.

(i) For all batch process vents, examples of process changes include, but are not limited to, changes in feedstock type or catalyst type; or whenever there is replacement, removal, or modification of recovery equipment considered part of the batch unit operation as specified in paragraph (a)(2) of this section; or increases in production capacity or production rate. For purposes of this paragraph (i), process changes do not include: Process upsets; unintentional, temporary process changes; and changes that are within the margin of variation on which the original group determination was based.

(ii) For Group 2 batch process vents where the group determination and batch mass input limitation are based on the expected mix of products, the situations described in paragraphs (i)(1)(ii)(A) and (B) of this section shall be considered to be process changes.

(A) The production of combinations of products not considered in establishing the batch mass input limitation.

(B) The production of a recipe of a product with a total mass of HAP charged to the reactor during the production of a single batch of product that is higher than the total mass of HAP for the recipe used as the single highest-HAP recipe for that product in the batch mass input limitation determination.

(iii) For Group 2 batch process vents where the group determination and batch mass input limitation are based on the single highest-HAP recipe (considering all products produced or processed in the batch unit operation), the production of a recipe having a total mass of HAP charged to the reactor (during the production of a single batch of product) that is higher than the total mass of HAP for the highest-HAP recipe used in the batch mass input limitation determination shall be considered to be a process change.

(2) For each batch process vent affected by a process change, the owner or operator shall redetermine the group status by repeating the procedures specified in paragraphs (b) through (g) of this section, as applicable; alternatively, engineering assessment, as described in paragraph (b)(6)(i) of this section, may be used to determine the effects of the process change.

(3) Based on the results from paragraph (i)(2) of this section, owners or operators of affected sources shall comply with either paragraph (i)(3)(i), (ii), or (iii) of this section.

(i) If the group redetermination described in paragraph (i)(2) of this section indicates that a Group 2 batch process vent has become a Group 1 batch process vent as a result of the process change, the owner or operator shall submit a report as specified in § 63.1327(b) and shall comply with the Group 1 provisions in §§ 63.1322 through 63.1327 in accordance with § 63.1310(i)(2)(ii) or (i)(2)(iii), as applicable.

(ii) If the redetermination described in paragraph (i)(2) of this section indicates that a Group 2 batch process vent with annual emissions less than the level specified in paragraph (d) of this section, that is in compliance with § 63.1322(g), now has annual emissions greater than or equal to the level specified in paragraph (d) of this section but remains a Group 2 batch process vent, the owner or operator shall comply with the provisions in paragraphs (i)(3)(ii)(A) through (C) of this section.

(A) Redetermine the batch mass input limitation;

(B) Submit a report as specified in § 63.1327(c); and

(C) Comply with § 63.1322(f), beginning with the year following the submittal

of the report submitted according to paragraph (i)(3)(ii)(B) of this section.

(iii) If the group redetermination described in paragraph (i)(2) of this section indicates no change in group status or no change in the relation of annual emissions to the levels specified in paragraph (d) of this section, the owner or operator shall comply with paragraphs (i)(3)(iii)(A) and (i)(3)(iii)(B) of this section.

(A) The owner or operator shall redetermine the batch mass input limitation; and

(B) The owner or operator shall submit the new batch mass input limitation in accordance with §63.1327(c).

(j) *Process changes to new SAN affected sources using a batch process.* Whenever process changes, as described in paragraph (j)(1) of this section, are made to a new affected source producing SAN using a batch process that could reasonably be expected to adversely impact the compliance status (*i.e.*, achievement of 84 percent emission reduction) of the affected source, the owner or operator shall comply with paragraphs (j)(2) and (3) of this section.

(1) Examples of process changes include, but are not limited to, changes in production capacity, production rate, feedstock type, or catalyst type; replacement, removal, or addition of recovery equipment considered part of a batch unit operation, as specified in paragraph (a)(1) of this section; replacement, removal, or addition of control equipment associated with a continuous or batch process vent or an aggregate batch vent stream. For purposes of this paragraph (j)(1), process changes do not include process upsets or unintentional, temporary process changes.

(2) The owner or operator shall redetermine the percent emission reduction achieved using the procedures specified in §63.1333(c). If engineering assessment, as described in paragraph (b)(6)(i) of this section, can demonstrate that the process change did not cause the percent emission reduction to decrease, it may be used in lieu of redetermining the percent reduction using the procedures specified in §63.1333(c).

(3) Where the redetermined percent reduction is less than 84 percent, the owner or operator of the affected source shall submit a report as specified in §63.1327(d) and shall comply with §63.1322(a)(3) and all associated provisions in accordance with §63.1310(i).

[61 FR 48229, Sept. 12, 1996, as amended at 64 FR 11549, Mar. 9, 1999; 65 FR 38113, June 19, 2000; 66 FR 36938, July 16, 2001]

§63.1324 Batch process vents—monitoring equipment.

(a) *General requirements.* Each owner or operator of a batch process vent or aggregate batch vent stream that uses a control device to comply with the requirements in §63.1322(a) or §63.1322(b), shall install the monitoring equipment specified in paragraph (c) of this section. All monitoring equipment shall be installed, calibrated, maintained, and operated according to manufacturer's specifications or other written procedures that provide adequate assurance that the equipment would reasonably be expected to monitor accurately.

(1) This monitoring equipment shall be in operation at all times when batch emission episodes, or portions thereof, that the owner or operator has selected to control are vented to the control device, or at all times when an aggregate batch vent stream is vented to the control device.

(2) Except as otherwise provided in this subpart, the owner or operator shall operate control devices such that the daily average of monitored parameters, established as specified in paragraph (f) of this section, remains above the minimum level or below the maximum level, as appropriate.

(b) *Continuous process vents.* Each owner or operator of a continuous process vent that uses a control device or recovery device to comply with the requirements in §63.1322(a)(3) shall comply with the applicable requirements of §63.1315(a) as specified in §63.1321(b).

(c) *Batch process vent and aggregate batch vent stream monitoring equipment.* The monitoring equipment specified in paragraphs (c)(1) through (c)(8) of this section shall be installed as specified in paragraph (a) of this section. The parameters to be monitored are specified in Table 7 of this subpart.

(1) Where an incinerator is used, a temperature monitoring device equipped with a continuous recorder is required.

(i) Where an incinerator other than a catalytic incinerator is used, the temperature monitoring device shall be installed in the firebox or in the ductwork immediately downstream of the firebox in a position before any substantial heat exchange occurs.

(ii) Where a catalytic incinerator is used, temperature monitoring devices shall be installed in the gas stream immediately before and after the catalyst bed.

(2) Where a flare is used, a device (including but not limited to a thermocouple, ultra-violet beam sensor, or infrared sensor) capable of continuously detecting the presence of a pilot flame is required.

(3) Where a boiler or process heater of less than 44 megawatts design heat input capacity is used, a temperature monitoring device in the firebox equipped with a continuous recorder is required. Any boiler or process heater in which all batch process vents or aggregate batch vent streams are introduced with the primary fuel or are used as the primary fuel is exempt from this requirement.

(4) Where a scrubber is used with an incinerator, boiler, or process heater in concert with the combustion of halogenated batch process vents or halogenated aggregate batch vent streams, the following monitoring equipment is required for the scrubber.

(i) A pH monitoring device equipped with a continuous recorder to monitor the pH of the scrubber effluent.

(ii) A flow measurement device equipped with a continuous recorder shall be located at the scrubber influent for liquid flow. Gas stream flow shall be determined using one of the procedures specified in paragraphs (c)(4)(ii)(A) through (c)(4)(ii)(C) of this section.

(A) The owner or operator may determine gas stream flow using the design blower capacity, with appropriate adjustments for pressure drop.

(B) If the scrubber is subject to regulations in 40 CFR parts 264 through 266 that have required a determination of the liquid to gas (L/G) ratio prior to the applicable compliance date for this subpart, the owner or operator may determine gas stream flow by the method that had been utilized to comply with those regulations. A determination that was conducted prior to the compliance date for this subpart may be utilized to comply with this subpart if it is still representative.

(C) The owner or operator may prepare and implement a gas stream flow determination plan that documents an appropriate method which will be used to determine the gas stream flow. The plan shall require determination of gas stream flow by a method which will at least provide a value for either a representative or the highest gas stream flow anticipated in the scrubber during representative operating conditions other than start-ups, shutdowns, or malfunctions. The plan shall include a description of the methodology to be followed and an explanation of how the selected methodology will reliably determine the gas stream flow, and a description of the records that will be maintained to document the determination of gas stream flow. The owner or operator shall maintain the plan as specified in § 63.1335(a).

(5) Where an absorber is used, a scrubbing liquid temperature monitoring device and a specific gravity monitoring device are required, each equipped with a continuous recorder.

(6) Where a condenser is used, a condenser exit temperature (product side) monitoring device equipped with a continuous recorder is required.

(7) Where a carbon adsorber is used, an integrating regeneration steam flow or nitrogen flow, or pressure monitoring device having an accuracy of ±10 percent of the flow rate, level, or pressure, or better, capable of recording the total regeneration steam flow or nitrogen flow, or pressure (gauge or absolute) for each regeneration cycle; and a carbon bed temperature monitoring device, capable of recording the carbon bed temperature after each regeneration and within 15 minutes of completing any cooling cycle are required.

(8) As an alternate to paragraphs (c)(5) through (c)(7) of this section, the owner or operator may install an organic monitoring device equipped with a continuous recorder.

(d) *Alternative monitoring parameters.* An owner or operator of a batch process vent or aggregate batch vent stream may request approval to monitor parameters other than those required by paragraph (c) of this section. The request shall be submitted according to the procedures specified in §63.1327(f) and §63.1335(f). Approval shall be requested if the owner or operator:

(1) Uses a control device other than those included in paragraph (c) of this section; or

(2) Uses one of the control devices included in paragraph (c) of this section, but seeks to monitor a parameter other than those specified in Table 7 of this subpart and paragraph (c) of this section.

(e) *Monitoring of bypass lines.* Owners or operators of a batch process vent or aggregate batch vent stream using a vent system that contains bypass lines that could divert emissions away from a control device used to comply with §63.1322(a) or §63.1322(b) shall comply with either paragraph (e)(1) or (e)(2) of this section. Equipment such as low leg drains, high point bleeds, analyzer vents, open-ended valves or lines, and pressure relief valves needed for safety purposes are not subject to this paragraph (e).

(1) Properly install, maintain, and operate a flow indicator that takes a reading at least once every 15 minutes. Records shall be generated as specified in §63.1326(e)(3). The flow indicator shall be installed at the entrance to any bypass line that could divert emissions away from the control device and to the atmosphere; or

(2) Secure the bypass line damper or valve in the non-diverting position with a car-seal or a lock-and-key type configuration. A visual inspection of the seal or closure mechanism shall be performed at least once every month to ensure that the damper or valve is maintained in the non-diverting position and emissions are not diverted through the bypass line. Records shall be generated as specified in §63.1326(e)(4).

(f) *Establishment of parameter monitoring levels.* Parameter monitoring levels for batch process vents and aggregate batch vent streams shall be established as specified in paragraphs (f)(1) through (f)(3) of this section. For continuous process vents complying with §63.1322(a)(3), parameter monitoring levels shall be established as specified in §63.1315(a), except as specified in paragraph (f)(4) of this section.

(1) For each parameter monitored under paragraph (c) or (d) of this section, the owner or operator shall establish a level, defined as either a maximum or minimum operating parameter as denoted in Table 8 of this subpart, that indicates proper operation of the control device. The level shall be established in accordance with the procedures specified in §63.1334. The level may be based upon a prior performance test conducted for determining compliance with a regulation promulgated by EPA, and the owner or operator is not required to conduct a performance test under §63.1325, provided that the prior performance test meets the conditions of §63.1325(b)(3).

(i) For batch process vents using a control device to comply with §63.1322(a)(2), the established level shall reflect the control efficiency established as part of the initial compliance demonstration specified in §63.1325(c)(2).

(ii) For aggregate batch vent streams using a control device to comply with §63.1322(b)(2), the established level shall reflect the emission reduction requirement of either 90 percent or 20 ppmv specified in §63.1322(b)(2).

(iii) For batch process vents and aggregate batch vent streams using a control device to comply with §63.1322(a)(3), the established level shall reflect the control efficiency established as part of the initial compliance demonstration specified in §63.1325(f)(4).

(2) The established level, along with supporting documentation, shall be submitted in the Notification of Compliance Status or the operating permit application as required in §63.1335(e)(5) or §63.1335(e)(8), respectively.

(3) The operating day shall be defined as part of establishing the parameter monitoring level and shall be submitted with the information in paragraph (f)(2) of this section. The definition of operating day shall specify the

time(s) at which an operating day begins and ends. The operating day shall not exceed 24 hours.

(4) For continuous process vents using a control or recovery device to comply with § 63.1322(a)(3), the established level shall reflect the control efficiency established as part of the initial compliance demonstration specified in § 63.1325(f)(4).

[61 FR 48229, Sept. 12, 1996, as amended at 65 FR 38118, June 19, 2000; 66 FR 36938, July 16, 2001]

§ 63.1325 Batch process vents—performance test methods and procedures to determine compliance.

(a) *Use of a flare.* When a flare is used to comply with § 63.1322(a)(1), § 63.1322(a)(3), § 63.1322(b)(1), or § 63.1322(b)(3), the owner or operator of an affected source shall comply with § 63.1333(e).

(b) *Exceptions to performance tests.* An owner or operator is not required to conduct a performance test when a control device specified in paragraphs (b)(1) through (b)(5) of this section is used to comply with § 63.1322(a)(2) or (a)(3).

(1) A boiler or process heater with a design heat input capacity of 44 megawatts or greater.

(2) A boiler or process heater where the vent stream is introduced with the primary fuel or is used as the primary fuel.

(3) A control device for which a performance test was conducted for determining compliance with a regulation promulgated by the EPA and the test was conducted using the same Methods specified in this section and either no deliberate process changes have been made since the test, or the owner or operator can demonstrate that the results of the performance test, with or without adjustments, reliably demonstrate compliance despite process changes. Recovery devices used for controlling emissions from continuous process vents complying with § 63.1322(a)(3) are also eligible for the exemption described in this paragraph (b)(3).

(4) A boiler or process heater burning hazardous waste for which the owner or operator:

(i) Has been issued a final permit under 40 CFR part 270 and complies with the requirements of 40 CFR part 266, subpart H; or

(ii) Has certified compliance with the interim status requirements of 40 CFR part 266, subpart H.

(5) A hazardous waste incinerator for which the owner or operator has been issued a final permit under 40 CFR part 270 and complies with the requirements of 40 CFR part 264, subpart O, or has certified compliance with the interim status requirements of 40 CFR part 265, subpart O.

(c) *Batch process vent testing and procedures for compliance with § 63.1322(a)(2).* Except as provided in paragraph (a) or (b) of this section, an owner or operator using a control device to comply with § 63.1322(a)(2) shall conduct a performance test using the procedures specified in paragraph (c)(1) of this section in order to determine the control efficiency of the control device. An owner or operator shall determine the percent reduction for the batch cycle using the control efficiency of the control device as specified in paragraphs (c)(2)(i) through (c)(2)(iii) of this section and the procedures specified in paragraph (c)(2) of this section. Compliance may be based on either total organic HAP or TOC. For purposes of this paragraph (c), the term ''batch emission episode'' shall have the meaning ''period of the batch emission episode selected for control,'' which may be the entire batch emission episode or may only be a portion of the batch emission episode.

(1) Performance tests shall be conducted as specified in paragraphs (c)(1)(i) through (c)(1)(v) of this section.

(i) Except as specified in paragraph (c)(1)(i)(A) of this section, a test shall be performed for the entire period of each batch emission episode in the batch cycle that the owner or operator selects to control as part of achieving the required 90 percent emission reduction for the batch cycle specified in § 63.1322(a)(2). Only one test is required for each batch emission episode selected by the owner or operator for control. The owner or operator shall follow the procedures listed in paragraphs (c)(1)(i)(B) through (c)(1)(i)(D) of this section.

(A) Alternatively, an owner or operator may choose to test only those periods of the batch emission episode during which the emission rate for the entire episode can be determined or during which the emissions are greater than the average emission rate of the batch emission episode. The owner or operator choosing either of these options shall develop an emission profile for the entire batch emission episode, based on either process knowledge or test data collected, to demonstrate that test periods are representative. Examples of information that could constitute process knowledge include calculations based on material balances and process stoichiometry. Previous test results may be used provided the results are still relevant to the current batch process vent conditions.

(B) Method 1 or 1A, 40 CFR part 60, appendix A, as appropriate, shall be used for selection of the sampling sites if the flow measuring device is a pitot tube, except that references to particulate matter in Method 1A do not apply for the purposes of this subpart. No traverse is necessary when Method 2A or 2D, 40 CFR part 60, appendix A is used to determine gas stream volumetric flow rate. Inlet sampling sites shall be located as specified in paragraphs (c)(1)(i)(B)(*1*) and (c)(1)(i)(B)(*2*) of this section. Outlet sampling sites shall be located at the outlet of the control device prior to release to the atmosphere.

(*1*) The control device inlet sampling site shall be located at the exit from the batch unit operation before any control device. §63.1323(a)(2) describes those recovery devices considered part of the unit operation. Inlet sampling sites would be after these specified recovery devices.

(*2*) If a batch process vent is introduced with the combustion air or as a secondary fuel into a boiler or process heater with a design capacity less than 44 megawatts, selection of the location of the inlet sampling sites shall ensure the measurement of total organic HAP or TOC (minus methane and ethane) concentrations in all batch process vents and primary and secondary fuels introduced into the boiler or process heater.

(C) Gas stream volumetric flow rate and/or average batch vent flow rate shall be determined as specified in §63.1323(e).

(D) Method 18 or Method 25A, 40 CFR part 60, appendix A shall be used to determine the concentration of organic HAP or TOC, as appropriate. Alternatively, any other method or data that has been validated according to the applicable procedures in Method 301 of appendix A of this part may be used. The use of Method 25A, 40 CFR part 60, appendix A shall conform with the requirements in paragraphs (c)(1)(i)(D)(*1*) and (c)(1)(i)(D)(*2*) of this section.

(*1*) The organic HAP used as the calibration gas for Method 25A, 40 CFR part 60, appendix A shall be the single organic HAP representing the largest percent by volume of the emissions.

(*2*) The use of Method 25A, 40 CFR part 60, appendix A is acceptable if the response from the high-level calibration gas is at least 20 times the standard deviation of the response from the zero calibration gas when the instrument is zeroed on the most sensitive scale.

(ii) If an integrated sample is taken over the entire test period to determine average batch vent concentration of TOC or total organic HAP, emissions per batch emission episode shall be calculated using Equations 19 and 20 of this subpart.

$$E_{episode,inlet} = K\left[\sum_{j=1}^{n}\left(C_{j,inlet}\right)\left(M_j\right)\right]\left(AFR_{inlet}\right)\left(T_h\right) \qquad \text{[Eq. 19]}$$

$$E_{episode,outlet} = K\left[\sum_{j=1}^{n}\left(C_{j,outlet}\right)\left(M_j\right)\right]\left(AFR_{outlet}\right)\left(T_h\right) \qquad \text{[Eq. 20]}$$

Where:

$E_{episode}$=Inlet or outlet emissions, kg/episode.

K=Constant, 2.494×10^{-6} $(ppmv)^{-1}$ (gm-mole/scm) (kg/gm) (min/hr), where standard temperature is 20 °C.

C_j=Average inlet or outlet concentration of TOC or sample organic HAP component j of the gas stream for the batch emission episode, dry basis, ppmv.

M_j=Molecular weight of TOC or sample organic HAP component j of the gas stream, gm/gm-mole.

AFR = Average inlet or outlet flow rate of gas stream for the batch emission episode, dry basis, scmm.

T_h=Hours/episode.

n=Number of organic HAP in stream. Note: Summation is not applicable if TOC emissions are being estimated using a TOC concentration measured using Method 25A, 40 CFR part 60, appendix A.

(iii) If grab samples are taken to determine average batch vent concentration of TOC or total organic HAP, emissions shall be calculated according to paragraphs (c)(1)(iii)(A) and (B) of this section.

(A) For each measurement point, the emission rates shall be calculated using Equations 21 and 22 of this subpart.

$$E_{point,inlet} = K\left[\sum_{j=1}^{n} C_j M_j\right] FR_{inlet} \qquad \text{[Eq. 21]}$$

$$E_{point,outlet} = K\left[\sum_{j=1}^{n} C_j M_j\right] FR_{outlet} \qquad \text{[Eq. 22]}$$

Where:

E_{point}=Inlet or outlet emission rate for the measurement point, kg/hr.

K=Constant, 2.494×10^{-6} $(ppmv)^{-1}$ (gm-mole/scm) (kg/gm) (min/hr), where standard temperature is 20 minus;oC.

C_j=Inlet or outlet concentration of TOC or sample organic HAP component j of the gas stream, dry basis, ppmv.

M_j=Molecular weight of TOC or sample organic HAP component j of the gas stream, gm/gm-mole.

FR=Inlet or outlet flow rate of gas stream for the measurement point, dry basis, scmm.

n=Number of organic HAP in stream. Note: Summation is not applicable if TOC emissions are being estimated using a TOC concentration measured using Method 25A, 40 CFR part 60, appendix A.

(B) The emissions per batch emission episode shall be calculated using Equations 23 and 24 of this subpart.

$$E_{episode,inlet} = (DUR)\left[\sum_{i=1}^{n} \frac{E_{point,inlet,i}}{n}\right] \qquad \text{[Eq. 23]}$$

$$E_{episode,outlet} = (DUR)\left[\sum_{i=1}^{n} \frac{E_{point,outlet,i}}{n}\right] \qquad \text{[Eq. 24]}$$

where:

$E_{episode}$ = Inlet or outlet emissions, kg/episode.

DUR = Duration of the batch emission episode, hr/episode.

$E_{point,i}$ = Inlet or outlet emissions for measurement point i, kg/hr.

n = Number of measurements.

(iv) The control efficiency for the control device shall be calculated using Equation 25 of this subpart.

$$R = \frac{\sum_{i=1}^{n} E_{inlet,i} - \sum_{i=1}^{n} E_{outlet,i}}{\sum_{i=1}^{n} E_{inlet,i}} (100) \qquad [Eq. 25]$$

where:

R = Control efficiency of control device, percent.

E_{inlet} = Mass rate of TOC or total organic HAP for batch emission episode i at the inlet to the control device as calculated under paragraph (c)(1)(ii) or (c)(1)(iii) of this section, kg/hr.

E_{outlet} = Mass rate of TOC or total organic HAP for batch emission episode i at the outlet of the control device, as calculated under paragraph (c)(1)(ii) or (c)(1)(iii) of this section, kg/hr.

n = Number of batch emission episodes in the batch cycle selected to be controlled.

(v) If the batch process vent entering a boiler or process heater with a design capacity less than 44 megawatts is introduced with the combustion air or as a secondary fuel, the weight-percent reduction of total organic HAP or TOC across the device shall be determined by comparing the TOC or total organic HAP in all combusted batch process vents and primary and secondary fuels with the TOC or total organic HAP, respectively, exiting the combustion device.

(2) The percent reduction for the batch cycle shall be determined using Equation 26 of this subpart and the control device efficiencies specified in paragraphs (c)(2)(i) through (c)(2)(iii) of this section. All information used to calculate the batch cycle percent reduction, including a definition of the batch cycle identifying all batch emission episodes, shall be recorded as specified in §63.1326(b)(2). This information shall include identification of those batch emission episodes, or portions thereof, selected for control.

$$PR = \frac{\sum_{i=1}^{n} E_{unc} + \sum_{i=1}^{n} E_{inlet,con} - \sum_{i=1}^{n} (1-R) E_{inlet,con}}{\sum_{i=1}^{n} E_{unc} + \sum_{i=1}^{n} E_{inlet,con}} (100) \qquad [Eq. 26]$$

Where:

PR = Percent reduction

E_{unc} = Mass rate of TOC or total organic HAP for uncontrolled batch emission episode i, kg/hr.

$E_{inlet,con}$ = Mass rate of TOC or total organic HAP for controlled batch emission episode i at the inlet to the control device, kg/hr.

R = Control efficiency of control device as specified in paragraphs (c)(2)(i) through (c)(2)(iii) of this section.

n = Number of uncontrolled batch emission episodes, controlled batch emission episodes, and control devices. The value of n is not necessarily the same for these three items.

(i) If a performance test is required by paragraph (c) of this section, the control efficiency of the control device shall be as determined in paragraph (c)(1)(iv) of this section.

(ii) If a performance test is not required by paragraph (c) of this section for a combustion control device, as specified in paragraph (b) of this section, the control efficiency shall be 98 percent. The control efficiency for a flare shall be 98 percent.

(iii) If a performance test is not required by paragraph (c) of this section for a noncombustion control device, the control efficiency shall be determined by the owner or operator based on engineering assessment.

(d) *Batch process vent and aggregate batch vent stream testing for compliance with § 63.1322(c) [halogenated emission streams].* An owner or operator controlling halogenated emissions in compliance with § 63.1322(c) shall conduct a performance test to determine compliance with the control efficiency specified in § 63.1322(c)(1) or the emission limit specified in § 63.1322(c)(2) for hydrogen halides and halogens.

(1) Sampling sites shall be located at the inlet and outlet of the scrubber or other halogen reduction device used to reduce halogen emissions in complying with § 63.1322(c)(1) or at the outlet of the halogen reduction device used to reduce halogen emissions in complying with § 63.1322(c)(2).

(2) The mass emissions of each hydrogen halide and halogen compound for the batch cycle or aggregate batch vent stream shall be calculated from the measured concentrations and the gas stream flow rate(s) determined by the procedures specified in paragraphs (d)(2)(i) and (d)(2)(ii) of this section except as specified in paragraph (d)(5) of this section.

(i) Method 26 or Method 26A, 40 CFR part 60, appendix A, shall be used to determine the concentration, in Mg per dry scm, of total hydrogen halides and halogens present in the emissions stream.

(ii) Gas stream volumetric flow rate and/or average batch vent flow rate shall be determined as specified in § 63.1323(e).

(3) To determine compliance with the percent reduction specified in § 63.1322(c)(1), the mass emissions for any hydrogen halides and halogens present at the inlet of the scrubber or other halogen reduction device shall be summed together. The mass emissions of any hydrogen halides or halogens present at the outlet of the scrubber or other halogen reduction device shall be summed together. Percent reduction shall be determined by subtracting the outlet mass emissions from the inlet mass emissions and then dividing the result by the inlet mass emissions and multiplying by 100.

(4) To determine compliance with the emission limit specified in § 63.1322(c)(2), the annual mass emissions for any hydrogen halides and halogens present at the outlet of the halogen reduction device and prior to any combustion device shall be summed together and compared to the emission limit specified in § 63.1322(c)(2).

(5) The owner or operator may use any other method to demonstrate compliance if the method or data has been validated according to the applicable procedures of Method 301 of appendix A of this part.

(e) *Aggregate batch vent stream testing for compliance with § 63.1322(b)(2) or (b)(3).* Except as specified in paragraphs (e)(1) through (e)(3) of this section, owners or operators of aggregate batch vent streams complying with § 63.1322(b)(2) or (b)(3) shall conduct a performance test using the performance testing procedures for continuous process vents in § 63.116(c).

(1) For purposes of this subpart, when the provisions of § 63.116(c) specify that Method 18, 40 CFR part 60, appendix A, shall be used, Method 18 or Method 25A, 40 CFR part 60, appendix A, may be used. The use of Method 25A, 40 CFR part 60, appendix A, shall conform with the requirements in paragraphs (e)(1)(i) and (e)(1)(ii) of this section.

(i) The organic HAP used as the calibration gas for Method 25A, 40 CFR part 60, appendix A, shall be the single organic HAP representing the largest percent by volume of the emissions.

(ii) The use of Method 25A, 40 CFR part 60, appendix A, is acceptable if the response from the high-level calibration gas is at least 20 times the standard deviation of the response from the zero calibration gas when the instrument is zeroed on the most sensitive scale.

(2) When § 63.116(c)(4) refers to complying with an emission reduction of 98 percent, for purposes of this subpart, the 90 percent reduction requirement specified in § 63.1322(b)(2) shall apply.

(3) When a combustion device is used to comply with the 20 parts per million

by volume outlet concentration standard specified in §63.1322(b)(2), the correction to 3 percent oxygen specified in the performance testing procedures of §63.116(c)(3) and §63.116(c)(3)(iii) is only required when supplemental combustion air is used to combust the emissions, for the purposes of this subpart.

(f) *Compliance with §63.1322(a)(3) [new SAN batch affected sources].* Except as provided in paragraph (b) of this section, an owner or operator using a control or recovery device to comply with the percent reduction requirement in §63.1322(a)(3) shall conduct performance tests as specified in either paragraph (f)(1), (f)(2), or (f)(3) of this section, as applicable. Compliance with §63.1322(a)(3) shall be determined as specified in paragraph (f)(4) of this section.

(1) For batch process vents, performance tests shall be conducted using the procedures specified in paragraph (c) of this section, except that the owner or operator is not required to determine the percent reduction for the batch cycle as specified in paragraph (c)(2) of this section.

(2) For continuous process vents, performance tests shall be conducted as required by the applicable requirements of §63.1315(a) as specified in §63.1321(b).

(3) For aggregate batch vent streams, performance tests shall be conducted as specified in paragraph (e) of this section.

(4) Compliance with the percent reduction requirement of §63.1322(a)(3) shall be demonstrated using the procedures specified in §63.1333(c) and the control device efficiencies specified in either paragraph (f)(4)(i) or (f)(4)(ii) of this section. Emissions for uncontrolled continuous process vents and aggregate batch vent streams shall be determined based on the direct measurement procedures specified in paragraph (f)(2) and (f)(3) of this section, respectively, or based on engineering assessment, as specified in §63.1323(b)(6)(i). At the discretion of the owner or operator, emissions for uncontrolled batch process vents shall be determined based on any of the procedures in §63.1323(b).

(i) For noncombustion devices, the control efficiency shall be as determined by the performance test required by paragraph (f)(1), (f)(2), or (f)(3) of this section. Alternatively, if a performance test is not required by paragraph (c) of this section, the control efficiency shall be determined by the owner or operator based on engineering assessment.

(ii) For combustion devices, the control efficiency shall be as determined by the performance test required by paragraph (f)(1), (f)(2), or (f)(3) of this section. Alternatively, if a performance test is not required, the control efficiency shall be 98 percent. The control efficiency for a flare shall be 98 percent.

(g) *Batch mass input limitation.* The batch mass input limitation required by §63.1322(g)(1) shall be determined by the owner or operator such that annual emissions for the batch process vent remain less than the level specified in §63.1323(d). The batch mass input limitation required by §63.1322(f)(1) shall be determined by the owner or operator such that annual emissions remain at a level that ensures that said batch process vent remains a Group 2 batch process vent, given the actual annual flow rate for said batch process vent determined according to the procedures specified in §63.1323(e)(3). The batch mass input limitation shall be determined using the same basis, as described in §63.1323(a)(1), used to make the group determination (*i.e.*, expected mix of products or highest-HAP recipe.) The establishment of the batch mass input limitation is not dependent upon any past production or activity level.

(1) If the expected mix of products serves as the basis for the batch mass input limitation, the batch mass input limitation shall be determined based on any foreseeable combination of products that the owner or operator expects to manufacture.

(2) If the single highest-HAP recipe serves as the basis for the batch mass input limitation, the batch mass input limitation shall be determined based solely on the production of the single highest-HAP recipe, considering all

products produced or processed in the batch unit operation.

[61 FR 48229, Sept. 12, 1996, as amended at 64 FR 11549, Mar. 9, 1999; 65 FR 38119, June 19, 2000]

§ 63.1326 Batch process vents—recordkeeping provisions.

(a) *Group determination records for batch process vents.* Except as provided in paragraphs (a)(7) and (a)(8) of this section, each owner or operator of an affected source shall maintain the records specified in paragraphs (a)(1) through (a)(6) of this section for each batch process vent subject to the group determination procedures of § 63.1323. Except for paragraph (a)(1) of this section, the records required by this paragraph (a) are restricted to the information developed and used to make the group determination under §§ 63.1323(b) through 63.1323(g), as appropriate. If an owner or operator did not need to develop certain information (*e.g.*, annual average batch vent flow rate) to determine the group status, this paragraph (a) does not require that additional information be developed. Paragraph (a)(9) of this section specifies the recordkeeping requirements for Group 2 batch process vents that are exempt from the batch mass input limitation provisions, as allowed under § 63.1322(h).

(1) An identification of each unique product that has emissions from one or more batch emission episodes venting from the batch process vent, along with an identification of the single highest-HAP recipe for each product and the mass of HAP fed to the reactor for that recipe.

(2) A description of, and an emission estimate for, each batch emission episode, and the total emissions associated with one batch cycle, as described in either paragraph (a)(2)(i) or (a)(2)(ii) of this section, as appropriate.

(i) If the group determination is based on the expected mix of products, records shall include the emission estimates for the single highest-HAP recipe of each unique product identified in paragraph (a)(1) of this section that was considered in making the group determination under § 63.1323.

(ii) If the group determination is based on the single highest-HAP recipe (considering all products produced or processed in the batch unit operation), records shall include the emission estimates for the single highest-HAP recipe.

(3) Total annual uncontrolled TOC or organic HAP emissions, determined at the exit from the batch unit operation before any control device, determined in accordance with § 63.1323(b).

(i) For Group 2 batch process vents, said emissions shall be determined at the batch mass input limitation.

(ii) For Group 1 batch process vents, said emissions shall be those used to determine the group status of the batch process vent.

(4) The annual average batch vent flow rate for the batch process vent, determined in accordance with § 63.1323(e).

(5) The cutoff flow rate, determined in accordance with § 63.1323(f).

(6) The results of the batch process vent group determination, conducted in accordance with § 63.1323(g).

(7) If a batch process vent is subject to § 63.1322(a) or (b), none of the records in paragraphs (a)(1) through (a)(6) of this section are required.

(8) If the total annual emissions from the batch process vent during the group determination are less than the appropriate level specified in § 63.1323(d), only the records in paragraphs (a)(1) through (a)(3) of this section are required.

(9) For each Group 2 batch process vent that is exempt from the batch mass input limitation provisions because it meets the criteria of § 63.1322(h), the records specified in paragraphs (a)(9)(i) and (ii) shall be maintained.

(i) Documentation of the maximum design capacity of the TPPU; and

(ii) The mass of HAP or material that can be charged annually to the batch unit operation at the maximum design capacity.

(b) *Compliance demonstration records.* Each owner or operator of a batch process vent or aggregate batch vent stream complying with § 63.1322(a) or (b), shall keep the following records, as applicable, readily accessible:

(1) The annual mass emissions of halogen atoms in the batch process vent or aggregate batch vent stream

determined according to the procedures specified in §63.1323(h);

(2) If the owner or operator of a batch process vent has chosen to comply with §63.1322(a)(2), records documenting the batch cycle percent reduction as specified in §63.1325(c)(2); and

(3) When using a flare to comply with §63.1322 (a)(1), (a)(3), (b)(1), or (b)(3):

(i) The flare design (i.e., steam-assisted, air-assisted or non-assisted);

(ii) All visible emission readings, heat content determinations, flow rate measurements, and exit velocity determinations made during the compliance determination required by §63.1333(e); and

(iii) Periods when all pilot flames were absent.

(4) The following information when using a control device to meet the percent reduction requirement specified in §63.1322(a)(2), (a)(3), (b)(2), or (b)(3):

(i) For an incinerator or non-combustion control device, the percent reduction of organic HAP or TOC achieved, as determined using the procedures specified in §63.1325(c) for batch process vents and §63.1325(e) for aggregate batch vent streams;

(ii) For a boiler or process heater, a description of the location at which the vent stream is introduced into the boiler or process heater;

(iii) For a boiler or process heater with a design heat input capacity of less than 44 megawatts and where the vent stream is introduced with combustion air or used as a secondary fuel and is not mixed with the primary fuel, the percent reduction of organic HAP or TOC achieved, as determined using the procedures specified in §63.1325(c) for batch process vents and §63.1325(e) for aggregate batch vent streams; and

(iv) For a scrubber or other halogen reduction device following a combustion device to control halogenated batch process vents or halogenated aggregate batch vent streams, the percent reduction of total hydrogen halides and halogens as determined under §63.1325(d)(3) or the emission limit determined under §63.1325(d)(4).

(5) When complying with the 20 parts per million by volume outlet concentration standard specified in §63.1322(b)(2), records of the outlet concentration of organic HAP or TOC on a dry basis. If supplemental combustion air is used to combust the emissions, the outlet concentration shall be corrected to 3 percent oxygen. If supplemental combustion air is not used, a correction to 3 percent oxygen is not required.

(c) *Establishment of parameter monitoring level records.* For each parameter monitored according to §63.1324(c) and Table 7 of this subpart, or for alternate parameters and/or parameters for alternate control devices monitored according to §63.1327(f) as allowed under §63.1324(d), maintain documentation showing the establishment of the level that indicates proper operation of the control device as required by §63.1324(f) for parameters specified in §63.1324(c) and as required by §63.1335(e) for alternate parameters. Said documentation shall include the parameter monitoring data used to establish the level.

(d) *Group 2 batch process vent continuous compliance records.* The owner or operator of a Group 2 batch process vent shall comply with either paragraph (d)(1) or (d)(2) of this section, as appropriate.

(1) The owner or operator of a Group 2 batch process vent that has chosen to comply with §63.1322(g) shall keep the following records readily accessible:

(i) Records designating the established batch mass input limitation required by §63.1322(g)(1) and specified in §63.1325(g).

(ii) Records specifying the mass of HAP or material charged to the batch unit operation.

(2) The owner or operator of a Group 2 batch process vent that has chosen to comply with §63.1322(f) shall keep the following records readily accessible:

(i) Records designating the established batch mass input limitation required by §63.1322(f)(1) and specified in §63.1325(g).

(ii) Records specifying the mass of HAP or material charged to the batch unit operation.

(e) *Controlled batch process vent continuous compliance records.* Each owner or operator of a batch process vent that has chosen to use a control device to comply with §63.1322(a) shall keep the following records, as applicable, readily accessible:

(1) Continuous records of the equipment operating parameters specified to be monitored under § 63.1324(c) as applicable, and listed in Table 7 of this subpart, or specified by the Administrator in accordance with § 63.1327(f) as allowed under § 63.1324(d). Said records shall be kept as specified under § 63.1335(d), except as specified in paragraphs (e)(1)(i) and (e)(1)(ii) of this section.

(i) For flares, the records specified in Table 7 of this subpart shall be maintained in place of continuous records.

(ii) For carbon adsorbers, the records specified in Table 7 of this subpart shall be maintained in place of batch cycle daily averages.

(2) Records of the batch cycle daily average value of each continuously monitored parameter, except as provided in paragraph (e)(2)(iii) of this section, as calculated using the procedures specified in paragraphs (e)(2)(i) and (e)(2)(ii) of this section.

(i) The batch cycle daily average shall be calculated as the average of all parameter values measured for an operating day during those batch emission episodes, or portions thereof, in the batch cycle that the owner or operator has selected to control.

(ii) Monitoring data recorded during periods of monitoring system breakdowns, repairs, calibration checks, and zero (low-level) and high-level adjustments shall not be included in computing the batch cycle daily averages. In addition, monitoring data recorded during periods of non-operation of the TPPU (or specific portion thereof) resulting in cessation of organic HAP emissions, or periods of start-up, shutdown, or malfunction shall not be included in computing the batch cycle daily averages.

(iii) If all recorded values for a monitored parameter during an operating day are above the minimum or below the maximum level established in accordance with § 63.1324(f), the owner or operator may record that all values were above the minimum or below the maximum level established rather than calculating and recording a batch cycle daily average for that operating day.

(3) Hourly records of whether the flow indicator for bypass lines specified in § 63.1324(e)(1) was operating and whether a diversion was detected at any time during the hour. Also, records of the times of all periods when the vent is diverted from the control device or the flow indicator specified in § 63.1324(e)(1) is not operating.

(4) Where a seal or closure mechanism is used to comply with § 63.1324(e)(2), hourly records of whether a diversion was detected at any time are not required. The owner or operator shall record whether the monthly visual inspection of the seals or closure mechanisms has been done, and shall record the occurrence of all periods when the seal mechanism is broken, the bypass line damper or valve position has changed, or the key for a lock-and-key type configuration has been checked out, and records of any car-seal that has broken.

(5) Records specifying the times and duration of periods of monitoring system breakdowns, repairs, calibration checks, and zero (low-level) and high-level adjustments. In addition, records specifying any other periods of process or control device operation when monitors are not operating.

(f) *Aggregate batch vent stream continuous compliance records.* In addition to the records specified in paragraphs (b) and (c) of this section, each owner or operator of an aggregate batch vent stream using a control device to comply with § 63.1322(b)(1) or (b)(2) shall keep the following records readily accessible:

(1) Continuous records of the equipment operating parameters specified to be monitored under § 63.1324(c) and listed in Table 7 of this subpart, as applicable, or specified by the Administrator in accordance with § 63.1327(f), as allowed under § 63.1324(d), with the exceptions listed in (f)(1)(i) and (f)(1)(ii) of this section.

(i) For flares, the records specified in Table 7 of this subpart shall be maintained in place of continuous records.

(ii) For carbon adsorbers, the records specified in Table 7 of this subpart shall be maintained in place of daily averages.

(2) Records of the daily average value of each continuously monitored parameter for each operating day determined according to the procedures specified in § 63.1335(d).

(3) For demonstrating compliance with the monitoring of bypass lines as specified in §63.1324(e), records as specified in paragraphs (e)(3) or (e)(4) of this section, as appropriate.

(g) Documentation supporting the establishment of the batch mass input limitation shall include the information specified in paragraphs (g)(1) through (g)(5) of this section, as appropriate.

(1) Identification of whether the purpose of the batch mass input limitation is to comply with §63.1322(f)(1) or (g)(1).

(2) Identification of whether the batch mass input limitation is based on the single highest–HAP recipe (considering all products) or on the expected mix of products for the batch process vent as allowed under §63.1323(a)(1).

(3) Definition of the operating year, for the purposes of determining compliance with the batch mass input limitation.

(4) If the batch mass input limitation is based on the expected mix of products, the owner or operator shall provide documentation that describes as many scenarios for differing mixes of products (*i.e.*, how many of each type of product) as the owner or operator desires the flexibility to accomplish. Alternatively, the owner or operator shall provide a description of the relationship among the mix of products that will allow a determination of compliance with the batch mass input limitation under any number of scenarios.

(5) The mass of HAP or material allowed to be charged to the batch unit operation per year under the batch mass input limitation.

[61 FR 48229, Sept. 12, 1996, as amended at 64 FR 11549, Mar. 9, 1999; 65 FR 38122, June 19, 2000]

§63.1327 Batch process vents—reporting requirements.

(a) The owner or operator of a batch process vent or aggregate batch vent stream at an affected source shall submit the information specified in paragraphs (a)(1) through (a)(6) of this section, as appropriate, as part of the Notification of Compliance Status specified in §63.1335(e)(5).

(1) For each batch process vent complying §63.1322(a) and each aggregate batch vent stream complying §63.1322(b), the information specified in §63.1326 (b) and (c), as applicable.

(2) For each Group 2 batch process vent with annual emissions less than the level specified in §63.1323(d), the information specified in §63.1326(d)(1)(i).

(3) For each Group 2 batch process vent with annual emissions greater than or equal to the level specified in §63.1323(d), the information specified in §63.1326(d)(2)(i).

(4) For each batch process vent subject to the group determination procedures, the information specified in §63.1326(a), as appropriate.

(5) For each Group 2 batch process vent that is exempt from the batch mass input limitation provisions because it meets the criteria of §63.1322(h), the information specified in §63.1326(a)(1) through (3), and the information specified in §63.1326(a)(4) through (6) as applicable, calculated at the conditions specified in §63.1322(h).

(6) When engineering assessment has been used to estimate emissions from a batch emissions episode and the criteria specified in §63.1323(b)(6)(i)(A) or (B) have been met, the owner or operator shall submit the information demonstrating that the criteria specified in §63.1323(b)(6)(i)(A) or (B) have been met as part of the Notification of Compliance Status required by §63.1335(e)(5).

(b) Whenever a process change, as defined in §63.1323(i)(1), is made that causes a Group 2 batch process vent to become a Group 1 batch process vent, the owner or operator shall notify the Administrator and submit a description of the process change within 180 days after the process change is made or with the next Periodic Report, whichever is later. The owner or operator of an affected source shall comply with the Group 1 batch process vent provisions in §§63.1321 through 63.1327 in accordance with §63.1310(i)(2)(ii).

(c) Whenever a process change, as defined in §63.1323(i)(1), is made that causes a Group 2 batch process vent with annual emissions less than the level specified in §63.1323(d) for which the owner or operator has chosen to comply with §63.1322(g) to have annual emissions greater than or equal to the level specified in §63.1323(d) but remains a Group 2 batch process vent, or

if a process change is made that requires the owner or operator to redetermine the batch mass input limitation as specified in § 63.1323(i)(3), the owner or operator shall submit a report within 180 days after the process change is made or with the next Periodic Report, whichever is later. The following information shall be submitted:

(1) A description of the process change;

(2) The batch mass input limitation determined in accordance with § 63.1322(f)(1).

(d) Whenever a process change, as defined in § 63.1323(j)(1), is made that could potentially cause the percent reduction for all process vents at a new SAN affected source using a batch process to be less than 84 percent, the owner or operator shall notify the Administrator and submit a description of the process change within 180 days after the process change is made or with the next Periodic Report, whichever is later. The owner or operator shall comply with § 63.1322(a)(3) and all associated provisions in accordance with § 63.1310(i).

(e) The owner or operator is not required to submit a report of a process change if one of the conditions specified in paragraphs (e)(1) or (e)(2) of this section is met.

(1) The change does not meet the description of a process change in § 63.1323(i) or (j).

(2) The redetermined group status remains Group 2 for an individual batch process vent with annual emissions greater than or equal to the level specified in § 63.1323(d) and the batch mass input limitation does not decrease, a Group 2 batch process vent with annual emissions less than the level specified in § 63.1323(d) complying with § 63.1322(g) continues to have emissions less than the level specified in § 63.1323(d) and the batch mass input limitation does not decrease, or the achieved emission reduction remains at 84 percent or greater for new SAN affected sources using a batch process.

(f) If an owner or operator uses a control device other than those specified in § 63.1324(c) and listed in Table 7 of this subpart or requests approval to monitor a parameter other than those specified § 63.1324(c) and listed in Table 7 of this subpart, the owner or operator shall submit a description of planned reporting and recordkeeping procedures, as specified in § 63.1335(f), as part of the Precompliance Report required under § 63.1335(e)(3). The Administrator will specify appropriate reporting and recordkeeping requirements as part of the review of the Precompliance Report.

(g) Owners or operators of affected sources complying with § 63.1324(e), shall comply with paragraph (g)(1) or (g)(2) of this section, as appropriate.

(1) Submit reports of the times of all periods recorded under § 63.1326(e)(3) when the batch process vent is diverted from the control device through a bypass line, with the next Periodic Report.

(2) Submit reports of all occurrences recorded under § 63.1326(e)(4) in which the seal mechanism is broken, the bypass line damper or valve position has changed, or the key to unlock the bypass line damper or valve was checked out, with the next Periodic Report.

[61 FR 48229, Sept. 12, 1996, as amended at 65 FR 38123, June 19, 2000; 66 FR 36938, July 16, 2001]

§ 63.1328 Heat exchange systems provisions.

(a) Except as specified in paragraph (b) of this section, each owner or operator of an affected source shall comply with § 63.104, with the differences noted in paragraphs (c) through (h) of this section, for the purposes of this subpart.

(b) The provisions of paragraph (a) of this section do not apply to each process contact cooling tower that is associated with an existing affected source manufacturing PET.

(c) When the term ''chemical manufacturing process unit'' is used in § 63.104, the term ''thermoplastic product process unit'' shall apply for purposes of this subpart, with the exception noted in paragraph (d) of this section.

(d) When the phrase ''a chemical manufacturing process unit meeting the conditions of § 63.100(b)(1) through (b)(3) of this subpart, except for chemical manufacturing process units meeting the condition specified in § 63.100(c)

of this subpart'' is used in §63.104(a), the term ''a TPPU, except for TPPUs meeting the condition specified in §63.1310(b)'' shall apply for purposes of this subpart.

(e) When §63.104 refers to Table 4 of subpart F of this part or Table 9 of subpart G of this part, the owner or operator is only required to consider organic HAP listed on Table 6 of this subpart, except for ethylene glycol which need not be considered under this section, for purposes of this subpart.

(f) When §63.104(c)(3) specifies the monitoring plan retention requirements, and when §63.104(f)(1) refers to the record retention requirements in §63.103(c)(1), the requirements in §§63.1335(a) and 63.1335(h) shall apply, for purposes of this subpart.

(g) When §63.104(f)(2) requires information to be reported in the Periodic Reports required by §63.152(c), the owner or operator shall instead report the information specified in §63.104(f)(2) in the Periodic Reports required by §63.1335(e)(6), for the purposes of this subpart.

(h) The compliance date for heat exchange systems subject to the provisions of this section is specified in §63.1311.

[65 FR 38124, June 19, 2000]

§63.1329 Process contact cooling towers provisions.

(a) The owner or operator of each new affected source that manufactures PET is required to comply with paragraph (b) of this section. The owner or operator of each existing affected source that manufactures PET using a continuous terephthalic acid high viscosity multiple end finisher process that utilizes a process contact cooling tower shall comply with paragraph (c) of this section, and is not required to comply with paragraph (b) of this section. The compliance date for process contact cooling towers subject to the provisions of this section is specified in §63.1311.

(b) *New affected source requirements.* The owner or operator of a new affected source subject to this section shall comply with paragraphs (b)(1) through (b)(2) of this section.

(1) The owner or operator of a new affected source subject to this section shall not send contact condenser effluent associated with a vacuum system to a process contact cooling tower.

(2) The owner or operator of a new affected source subject to this section shall indicate in the Notification of Compliance Status, as required in §63.1335(e)(5), that contact condenser effluent associated with vacuum systems is not sent to process contact cooling towers.

(c) *Existing affected source requirements.* The owner or operator of an existing affected source subject to this section who manufactures PET using a continuous terephthalic acid high viscosity multiple end finisher process, and who is subject or becomes subject to 40 CFR part 60, subpart DDD, shall maintain an ethylene glycol concentration in the process contact cooling tower at or below 4.0 percent by weight averaged on a daily basis over a rolling 14-day period of operating days. Compliance with this paragraph (c) shall be determined as specified in paragraphs (c)(1) through (c)(4) of this section. It should be noted that compliance with this paragraph (c) does not exempt owners or operators from complying with the provisions of §63.1330 for those process wastewater streams that are sent to the process contact cooling tower.

(1) To determine the ethylene glycol concentration, owners or operators shall follow the procedures specified in 40 CFR 60.564(j)(1), except as provided in paragraph (c)(2) of this section.

(i) At least one sample per operating day shall be collected using the procedures specified in 40 CFR 60.564(j)(1)(i). An average ethylene glycol concentration by weight shall be calculated on a daily basis over a rolling 14-day period of operating days. Each daily average ethylene glycol concentration so calculated constitutes a performance test.

(ii) The owner or operator may elect to reduce the sampling program to any 14 consecutive operating day period once every two calendar months, if at least seventeen consecutive 14-day rolling average concentrations immediately preceding the reduced sampling program are each less than 1.2 weight percent ethylene glycol. If the average

concentration obtained over the 14 operating day sampling during the reduced test period exceeds the upper 95 percent confidence interval calculated from the most recent test results in which no one 14-day average exceeded 1.2 weight percent ethylene glycol, then the owner or operator shall reinstitute a daily sampling program. The 95 percent confidence interval shall be calculated as specified in paragraph (c)(1)(iii) of this section. A reduced program may be reinstituted if the requirements specified in this paragraph (c)(1)(ii) are met.

(iii) The upper 95 percent confidence interval shall be calculated using the Equation 27 of this subpart:

$$CI_{95} = \frac{\sum_{i=1}^{n} X_i}{n} + 2\sqrt{\frac{n\sum_{i=1}^{n}\left(X_i^{\,2}\right) - \left(\sum_{i=1}^{n} X_i\right)^2}{n\,(n-1)}} \qquad \text{[Eq. 27]}$$

Where:

CI_{95} = 95 percent confidence interval

X_i = daily ethylene glycol concentration for each operating day used to calculate each 14-day rolling average used in test results to justify implementing the reduced testing program.

n = number of ethylene glycol concentrations.

(2) Measuring an alternative parameter, such as carbon oxygen demand or biological oxygen demand, that is demonstrated to be directly proportional to the ethylene glycol concentration shall be allowed. Such parameter shall be measured during the initial 14-day performance test during which the facility is shown to be in compliance with the ethylene glycol concentration standard whereby the ethylene glycol concentration is determined using the procedures described in paragraph (c)(1) of this section. The alternative parameter shall be measured on a daily basis and the average value of the alternative parameter shall be calculated on a daily basis over a rolling 14-day period of operating days. Each daily average value of the alternative parameter constitutes a performance test.

(3) During each performance test, daily measurement and daily average 14-day rolling averages of the ethylene glycol concentration in the cooling tower water shall be recorded. For the initial performance test, these records shall be submitted in the Notification of Compliance Status report.

(4) All periods when the 14-day rolling average exceeds the standard shall be reported in the Periodic Report.

[61 FR 48229, Sept. 12, 1996, as amended at 65 FR 38124, June 19, 2000]

§ 63.1330 Wastewater provisions.

(a) Except as specified in paragraphs (d) and (e) of this section, the owner or operator of each affected source shall comply with paragraphs (b) and (c) of this section.

(b) The owner or operator of each affected source shall comply with the requirements of §§ 63.132 through 63.149, with the differences noted in paragraphs (b)(1) through (b)(22) of this section for the purposes of this subpart.

(1) When the determination of equivalence criteria in § 63.102(b) is referred to in §§ 63.132, 63.133, and 63.137, the provisions in § 63.6(g) shall apply for the purposes of this subpart.

(2) When the storage vessel requirements contained in §§ 63.119 through 63.123 are referred to in §§ 63.132 through 63.149, §§ 63.119 through 63.123 are applicable, with the exception of the differences referred to in § 63.1314, for the purposes of this subpart.

(3) When § 63.146(a) requires the submission of a request for approval to monitor alternative parameters according to the procedures specified in § 63.151(f) or (g), owners or operators requesting to monitor alternative parameters shall follow the procedures specified in § 63.1335(f) for the purposes of this subpart.

(4) When §63.147(d) requires owners or operators to keep records of the daily average value of each continuously monitored parameter for each operating day as specified in §63.152(f), owners and operators shall instead keep records of the daily average value of each continuously monitored parameter as specified in §63.1335(d) for the purposes of this subpart.

(5) When §§63.132 through 63.149 refer to an ''existing source,'' the term ''existing affected source,'' as defined in §63.1310(a), shall apply for the purposes of this subpart.

(6) When §§63.132 through 63.149 refer to a ''new source,'' the term ''new affected source,'' as defined in §63.1310(a), shall apply for the purposes of this subpart.

(7) When §63.132(a) and (b) refer to the ''applicable dates specified in §63.100 of subpart F of this part,'' the compliance dates specified in §63.1311 shall apply for the purposes of this subpart.

(8) The provisions of paragraphs (b)(8)(i), (b)(8)(ii), and (b)(8)(iii) of this section clarify the organic HAP that an owner or operator shall consider when complying with the requirements in §§63.132 through 63.149.

(i) When §§63.132 through 63.149 refer to table 8 compounds, the owner or operator is only required to consider 1,3-butadiene for purposes of this subpart.

(ii) When §§63.132 through 63.149 refer to table 9 compounds, the owner or operator is only required to consider compounds that meet the definition of organic HAP in §63.1312 and that are listed on table 9 of 40 CFR part 63, subpart G, for the purposes of this subpart, except for ethylene glycol which need not be considered.

(iii) When §§63.132 through 63.149 refer to compounds in table 36 of 40 CFR part 63, subpart G, or compounds on List 1 and/or List 2, as listed on table 36 of 40 CFR part 63, subpart G, the owner or operator is only required to consider compounds that meet the definition of organic HAP in §63.1312 and that are listed in table 36 of 40 CFR part 63, subpart G, for the purposes of this subpart.

(9) Whenever §§63.132 through 63.149 refer to a ''chemical manufacturing process unit,'' the term ''thermoplastic product process unit,'' (or TPPU) as defined in §63.1312, shall apply for the purposes of this subpart. In addition, when §63.149 refers to ''a chemical manufacturing process unit that meets the criteria of §63.100(b) of subpart F of this part,'' the term ''a TPPU as defined in §63.1312(b)'' shall apply for the purposes of this subpart.

(10) Whenever §§63.132 through 63.149 refer to a Group 1 wastewater stream or a Group 2 wastewater stream, the definitions of these terms contained in §63.1312 shall apply for the purposes of this subpart.

(11) When §63.149(d) refers to ''§63.100(f) of subpart F'', the phrase ''§63.1310(c)'' shall apply for the purposes of this subpart. In addition, where §63.149(d) states ''and the item of equipment is not otherwise exempt from controls by the provisions of subpart A, F, G, or H of this part'', the phrase ''and the item of equipment is not otherwise exempt from controls by the provisions of subparts A, F, G, H, or JJJ of this part'' shall apply for the purposes of this subpart.

(12) When §63.149(e)(1) and (e)(2) refer to ''a chemical manufacturing process unit subject to the new source requirements of 40 CFR §63.100(l)(1) or 40 CFR §63.100(l)(2),'' the phrase ''a TPPU that is part of a new affected source or that is a new affected source,'' shall apply for the purposes of this subpart.

(13) When the Notification of Compliance Status requirements contained in §63.152(b) are referred to in §§63.138 and 63.146, the Notification of Compliance Status requirements contained in §63.1335(e)(5) shall apply for the purposes of this subpart. In addition, when §§63.132 through 63.149 require that information be reported according to §63.152(b) in the Notification of Compliance Status, the owner or operator of an affected source shall report the specified information in the Notification of Compliance Status required by §63.1335(e)(5) for the purposes of this subpart.

(14) When the Periodic Report requirements contained in §63.152(c) are referred to in §63.146, the Periodic Report requirements contained in §63.1335(e)(6) shall apply for the purposes of this subpart. In addition, when

§§ 63.132 through 63.149 require that information be reported in the Periodic Reports required in § 63.152(c), the owner or operator of an affected source shall report the specified information in the Periodic Reports required in § 63.1335(e)(6) for the purposes of this subpart.

(15) When § 63.143(f) specifies that owners or operators shall establish the range that indicates proper operation of the treatment process or control device, the owner or operator shall instead comply with the requirements of § 63.1334(c) or (d) for establishing parameter level maximums/minimums for the purposes of this subpart.

(16) When § 63.146(b)(7) and § 63.146(b)(8) require that ''the information on parameter ranges specified in § 63.152(b)(2)'' be reported in the Notification of Compliance Status, owners and operators of affected sources are instead required to report the information on parameter levels as specified in § 63.1335(e)(5)(ii) for the purposes of this subpart.

(17) When the term ''range'' is used in §§ 63.132 through 63.149, the term ''level'' apply instead for the purposes of this subpart. This level shall be determined using the procedures specified in § 63.1334.

(18) For the purposes of this subpart, the owner or operator of an affected source is not required to include process wastewater streams that contain styrene when conducting performance tests for the purposes of calculating the required mass removal (RMR) or the actual mass removal (AMR) under the provisions described in § 63.145(f) or § 63.145(g). For purposes of this paragraph, a process wastewater stream is considered to contain styrene if the wastewater stream meets the requirements in paragraph (b)(18)(i), (ii), (iii), (iv), or (v) of this section.

(i) The wastewater stream originates at equipment that produces ABS or ABS latex;

(ii) The wastewater stream originates at equipment that produces EPS;

(iii) The wastewater stream originates at equipment that produces MABS;

(iv) The wastewater stream originates at equipment that produces MBS; or

(v) The wastewater stream originates at equipment that produces SAN.

(19) When the provisions of § 63.139(c)(1)(ii), § 63.145(d)(4), or § 63.145(i)(2) specify that Method 18, 40 CFR part 60, appendix A, shall be used, Method 18 or Method 25A, 40 CFR part 60, appendix A, may be used for the purposes of this subpart. The use of Method 25A, 40 CFR part 60, appendix A, shall conform with the requirements in paragraphs (b)(19)(i) and (b)(19)(ii) of this section.

(i) The organic HAP used as the calibration gas for Method 25A, 40 CFR part 60, appendix A, shall be the single organic HAP representing the largest percent by volume of the emissions.

(ii) The use of Method 25A, 40 CFR part 60, appendix A, is acceptable if the response from the high-level calibration gas is at least 20 times the standard deviation of the response from the zero calibration gas when the instrument is zeroed on the most sensitive scale.

(20) In § 63.145(j), instead of the reference to § 63.11(b), and instead of § 63.145(j)(1) and § 63.145(j)(2), the requirements in § 63.1333(e) shall apply.

(21) The owner or operator of a facility which receives a Group 1 wastewater stream, or a residual removed from a Group 1 wastewater stream, for treatment pursuant to § 63.132(g) is subject to the requirements of § 63.132(g) with the differences identified in this section, and is not subject to subpart DD of this part with respect to that material.

(22) When § 63.132(g) refers to ''§§ 63.133 through 63.137'' or ''§§ 63.133 through 63.147'', the provisions in this section 63.1330 shall apply, for the purposes of this subpart.

(c) For each affected source, the owner or operator shall comply with the requirements for maintenance wastewater in § 63.105, except that when § 63.105(a) refers to ''organic HAPs listed in table 9 of subpart G of this part,'' the owner or operator is only required to consider compounds that meet the definition of organic HAP in § 63.1312 and that are listed in table 9 of 40 CFR part 63, subpart G, except for ethylene glycol which need not be considered, for the purposes of this subpart.

(d) The provisions of paragraph (b) of this section do not apply to each affected source producing ASA/AMSAN.

(e) The provisions of paragraphs (b) and (c) of this section do not apply to each affected source producing polystyrene using either a continuous or batch process.

[65 FR 38125, June 19, 2000, as amended at 66 FR 36938, July 16, 2001]

§63.1331 Equipment leak provisions.

(a) Except as provided for in paragraphs (b) and (c) of this section, the owner or operator of each affected source shall comply with the requirements of subpart H of this part, with the differences noted in paragraphs (a)(1) through (a)(13) of this section.

(1) For an affected source producing polystyrene resin, the indications of liquids dripping, as defined in subpart H of this part, from bleed ports in pumps and agitator seals in light liquid service shall not be considered to be a leak. For purposes of this subpart, a ''bleed port'' is a technologically-required feature of the pump or seal whereby polymer fluid used to provide lubrication and/or cooling of the pump or agitator shaft exits the pump, thereby resulting in a visible dripping of fluid.

(2) The compliance date for the equipment leak provisions contained in this section is provided in §63.1311. Whenever subpart H of this part refers to the compliance dates specified in any paragraph contained in §63.100, the compliance dates listed in §63.1311(d) shall instead apply, for the purposes of this subpart. When §63.182(c)(4) refers to ''sources subject to subpart F,'' the phrase ''sources subject to this subpart'' shall apply, for the purposes of this subpart. In addition, extensions of compliance dates are addressed by §63.1311(e) instead of §63.182(a)(6), for the purposes of this subpart.

(3) Owners and operators of an affected source subject to this subpart are not required to submit the Initial Notification required by §63.182(a)(1) and §63.182(b).

(4) As specified in §63.1335(e)(5), the Notification of Compliance Status required by paragraphs §63.182(a)(2) and §63.182(c) shall be submitted within 150 days (rather than 90 days) of the applicable compliance date specified in §63.1311 for the equipment leak provisions.

(5) The information specified by §63.182(a)(3) and §63.182(d) (*i.e.*, Periodic Reports) shall be submitted as part of the Periodic Reports required by §63.1335(e)(6).

(i) A leak is determined to be detected if there is evidence of a potential leak found by visual, audible, or olfactory means. Method 21, 40 CFR part 60, appendix A may not be used to determine the presence or absence of a leak.

(ii)(A) When a leak is detected, it shall be repaired as soon as practical, but not later than 15 days after it is detected, except as provided in §63.171.

(B) The first attempt at repair shall be made no later than 5 days after each leak is detected.

(C) Repaired shall mean that the visual, audible, olfactory, or other indications of a leak have been eliminated; that no bubbles are observed at potential leak sites during a leak check using soap solution; or that the system will hold a test pressure.

(iii) An owner or operator is not required to develop an initial list of identification numbers as would otherwise be required under §63.181(b)(1)(i) or §63.181(b)(4).

(iv) When recording the detection of a leak under §63.182(d)(1), the owner or operator of an affected source shall comply with paragraphs (a)(6)(iv)(A) through (a)(6)(iv)(B) of this section.

(A) When complying with §63.181(d)(1), provide an identification number for the leaking equipment at the time of recordkeeping. Further, the owner or operator is not required to record the identification number of the instrument (*i.e.*, Method 21 instrument) because the use of Method 21 is not an acceptable method for determining a leak under this paragraph (a)(6).

(B) An owner or operator is not required to comply with §63.181(d)(4) which requires a record of the maximum instrument reading measured by Method 21 of 40 CFR part 60, appendix A.

(v) Indications of liquids dripping, as defined in subpart H of this part, from packing glands for pumps in ethylene glycol service where the pump seal is

designed to weep fluid shall not be considered to be a leak. Ethylene glycol dripping from pump seals must be captured in a catchpan and returned to the process.

(7) When § 63.166(b)(4)(i) refers to Table 9 of subpart G of this part, the owner or operator is only required to consider organic HAP listed on Table 6 of this subpart for purposes of this subpart, except for ethylene glycol which need not be considered.

(8) When the provisions of subpart H of this part specify that Method 18, 40 CFR part 60, appendix A, shall be used, Method 18 or Method 25A, 40 CFR part 60, appendix A, may be used for the purposes of this subpart. The use of Method 25A, 40 CFR part 60, appendix A, shall conform with the requirements in paragraphs (a)(8)(i) and (a)(8)(ii) of this section.

(i) The organic HAP used as the calibration gas for Method 25A, 40 CFR part 60, appendix A, shall be the single organic HAP representing the largest percent by volume of the emissions.

(ii) The use of Method 25A, 40 CFR part 60, appendix A, is acceptable if the response from the high-level calibration gas is at least 20 times the standard deviation of the response from the zero calibration gas when the instrument is zeroed on the most sensitive scale.

(9) [Reserved]

(10) If specific items of equipment, comprising part of a process unit subject to this subpart, are managed by different administrative organizations (*e.g.*, different companies, affiliates, departments, divisions, *etc.*), those items of equipment may be aggregated with any TPPU within the affected source for all purposes under subpart H of this part, providing there is no delay in achieving the applicable compliance date.

(11) When the terms ''equipment'' and ''equipment leak'' are used in subpart H of this part, the definitions of these terms in § 63.1312 shall apply for the purposes of this subpart.

(12) The phrase ''the provisions of subparts F, I, or JJJ of this part'' shall apply instead of the phrase ''the provisions of subpart F or I of this part'' throughout §§ 63.163 and 63.168, for the purposes of this subpart. In addition, the phrase ''subparts F, I, and JJJ'' shall apply instead of the phrase ''subparts F and I'' in § 63.174(c)(2)(iii), for the purposes of this subpart.

(13) An owner or operator using a flare to comply with the requirements of this section shall conduct a compliance demonstration as specified in § 63.1333(e).

(b) The provisions of this section do not apply to each TPPU producing PET using a process other than a continuous terephthalic acid (TPA) high viscosity multiple end finisher process that is part of an affected source if all of the equipment leak components subject to this section § 63.1331 in the TPPU are either in vacuum service or in heavy liquid service.

(1) Owners and operators of a TPPU exempted under paragraph (b) of this section shall comply with paragraph (b)(1)(i) or (b)(1)(ii) of this section.

(i) Retain information, data, and analyses used to demonstrate that all of the components in the exempted TPPU are either in vacuum service or in heavy liquid service. For components in vacuum service, examples of information that could document this include, but are not limited to, analyses of process stream composition and process conditions, engineering calculations, or process knowledge. For components in heavy liquid service, such documentation shall include an analysis or demonstration that the process fluids do not meet the criteria of ''in light liquid service'' or ''in gas or vapor service.''

(ii) When requested by the Administrator, demonstrate that all of the components in the TPPU are either in vacuum service or in heavy liquid service.

(2) If changes occur at a TPPU exempted under paragraph (b) of this section such that all of the components in the TPPU are no longer either in vacuum service or in heavy liquid service (*e.g.*, by either process changes or the addition of new components), the owner or operator of the affected source shall comply with the provisions of this section for all of the components at the TPPU. The owner or operator shall submit a report within 180 days after the process change is made

or the information regarding the process change is known to the owner or operator. This report may be included in the next Periodic Report, as specified in paragraph (a)(5) of this section. A description of the process change shall be submitted with this report.

(c) The provisions of this section do not apply to each affected source producing PET using a continuous TPA high viscosity multiple end finisher process.

[61 FR 48229, Sept. 12, 1996, as amended at 62 FR 37722, July 15, 1997; 65 FR 38127, June 19, 2000; 66 FR 40907, Aug. 6, 2001]

§ 63.1332 Emissions averaging provisions.

(a) This section applies to owners or operators of existing affected sources who seek to comply with § 63.1313(b) by using emissions averaging rather than following the provisions of §§ 63.1314, 63.1315, 63.1316 through 63.1320, 63.1321, and 63.1330.

(1) The following emission point limitations apply to the use of these provisions:

(i) All emission points included in an emissions average shall be from the same affected source. There may be an emissions average for each affected source located at a plant site.

(ii)(A) If a plant site has only one affected source for which emissions averaging is being used to demonstrate compliance, the number of emission points allowed in the emissions average for said affected source is limited to twenty. This number may be increased by up to five additional emission points if pollution prevention measures are used to control five or more of the emission points included in the emissions average.

(B) If a plant site has two or more affected sources for which emissions averaging is being used to demonstrate compliance, the number of emission points allowed in the emissions averages for said affected sources is limited to twenty. This number may be increased by up to five additional emission points if pollution prevention measures are used to control five or more of the emission points included in the emissions averages.

(2) Compliance with the provisions of this section may be based on either organic HAP or TOC.

(3) For the purposes of these provisions, whenever Method 18, 40 CFR part 60, appendix A, is specified within the paragraphs of this section or is specified by reference through provisions outside this section, Method 18 or Method 25A, 40 CFR part 60, appendix A, may be used. The use of Method 25A, 40 CFR part 60, appendix A, shall conform with the requirements in paragraphs (a)(3)(i) and (a)(3)(ii) of this section.

(i) The organic HAP used as the calibration gas for Method 25A, 40 CFR part 60, appendix A shall be the single organic HAP representing the largest percent by volume of the emissions.

(ii) The use of Method 25A, 40 CFR part 60, appendix A is acceptable if the response from the high-level calibration gas is at least 20 times the standard deviation of the response from the zero calibration gas when the instrument is zeroed on the most sensitive scale.

(b) Unless an operating permit application has been submitted, the owner or operator shall develop and submit for approval an Emissions Averaging Plan containing all of the information required in § 63.1335(e)(4) for all emission points to be included in an emissions average.

(c) Paragraphs (c)(1) through (c)(5) of this section describe the emission points that may be used to generate emissions averaging credits if control was applied after November 15, 1990, and if sufficient information is available to determine the appropriate value of credits for the emission point. Paragraph (c)(6) of this section discusses the use of pollution prevention in generating emissions averaging credits.

(1) Storage vessels, batch process vents, aggregate batch vent streams, continuous process vents subject to § 63.1315, and process wastewater streams that are determined to be Group 2 emission points. The term ''continuous process vents subject to § 63.1315'' includes continuous process vents subject to § 63.1316 (b)(1)(iii), (b)(2)(iii), and (c)(2), which reference § 63.1315.

(2) Continuous process vents located in the collection of material recovery sections within the affected source at an existing affected source producing PET using a continuous dimethyl terephthalate process subject to § 63.1316(b)(1)(i) where the uncontrolled organic HAP emissions from said continuous process vents are equal to or less than 0.12 kg organic HAP per Mg of product. These continuous process vents shall be considered Group 2 emission points for the purposes of this section.

(3) Storage vessels, continuous process vents subject to § 63.1315, and process wastewater streams that are determined to be Group 1 emission points and that are controlled by a technology that the Administrator or permitting authority agrees has a higher nominal efficiency than the reference control technology. Information on the nominal efficiencies for such technologies shall be submitted and approved as provided in paragraph (i) of this section.

(4) Batch process vents and aggregate batch vent streams that are determined to be Group 1 emission points and that are controlled to a level more stringent than the applicable standard.

(5) Continuous process vents subject to § 63.1316 (b)(1)(i), (b)(1)(ii), (b)(2)(i), (b)(2)(ii), or (c)(1) located in the collection of process sections within the affected source, as specified in paragraphs (c)(5)(i) through (c)(5)(ii) of this section. The continuous process vents identified in paragraphs (c)(5)(i) through (c)(5)(ii) of this section shall be considered to be Group 1 emission points for the purposes of this section.

(i) Continuous process vents subject to § 63.1316(b)(1)(i) located in the collection of material recovery sections within the affected source where the uncontrolled organic HAP emissions for said continuous process vents are greater than 0.12 kg organic HAP per Mg of product and said continuous process vents are controlled to a level more stringent than the applicable standard.

(ii) Continuous process vents subject to § 63.1316(b)(1)(ii), (b)(2)(i), (b)(2)(ii), or (c)(1) located in the collection of process sections within the affected source where the uncontrolled organic HAP emissions from said continuous process vents are controlled to a level more stringent than the applicable standard.

(6) The percent reduction for any storage vessel, batch process vent, aggregate batch vent stream, continuous process vent, and process wastewater stream from which emissions are reduced by pollution prevention measures shall be determined using the procedures specified in paragraph (j) of this section.

(i) For a Group 1 storage vessel, batch process vent, aggregate batch vent stream, continuous process vent, or process wastewater stream, the pollution prevention measure must reduce emissions more than if the applicable reference control technology or standard had been applied to the emission point instead of the pollution prevention measure, except as provided in paragraph (c)(6)(ii) of this section.

(ii) If a pollution prevention measure is used in conjunction with other controls for a Group 1 storage vessel, batch process vent, aggregate batch vent stream, continuous process vent, or process wastewater stream, the pollution prevention measure alone does not have to reduce emissions more than the applicable reference control technology or standard, but the combination of the pollution prevention measure and other controls must reduce emissions more than if the applicable reference control technology or standard had been applied instead of the pollution prevention measure.

(d) The following emission points cannot be used to generate emissions averaging credits:

(1) Emission points already controlled on or before November 15, 1990, cannot be used to generate credits unless the level of control is increased after November 15, 1990. In this case, credit will be allowed only for the increase in control after November 15, 1990.

(2) Group 1 emission points, identified in paragraph (c)(3) of this section, that are controlled by a reference control technology cannot be used to generate credits unless the reference control technology has been approved for use in a different manner and a higher nominal efficiency has been assigned

according to the procedures in paragraph (i) of this section.

(3) Emission points for nonoperating TPPU cannot be used to generate credits. TPPU that are shutdown cannot be used to generate credits or debits.

(4) Maintenance wastewater cannot be used to generate credits. Wastewater streams treated in biological treatment units cannot be used to generate credits. These two types of wastewater cannot be used to generate credits or debits. For the purposes of this section, the terms wastewater and wastewater stream are used to mean process wastewater.

(5) Emission points controlled to comply with a State or Federal rule other than this subpart cannot be used to generate credits, unless the level of control has been increased after November 15, 1990, to a level above what is required by the other State or Federal rule. Only the control above what is required by the other State or Federal rule will be credited. However, if an emission point has been used to generate emissions averaging credit in an approved emissions average, and the emission point is subsequently made subject to a State or Federal rule other than this subpart, the emission point may continue to generate emissions averaging credit for the purpose of complying with the previously approved emissions average.

(e) For all emission points included in an emissions average, the owner or operator shall perform the following tasks:

(1) Calculate and record monthly debits for all Group 1 emission points that are controlled to a level less stringent than the reference control technology or standard for those emission points. Said Group 1 emission points are identified in paragraphs (c)(3) through (c)(5) of this section. Equations in paragraph (g) of this section shall be used to calculate debits.

(2) Calculate and record monthly credits for all Group 1 and Group 2 emission points that are over-controlled to compensate for the debits. Equations in paragraph (h) of this section shall be used to calculate credits. Emission points and controls that meet the criteria of paragraph (c) of this section may be included in the credit calculation, whereas those described in paragraph (d) of this section shall not be included.

(3) Demonstrate that annual credits calculated according to paragraph (h) of this section are greater than or equal to debits calculated for the same annual compliance period according to paragraph (g) of this section.

(i) The owner or operator may choose to include more than the required number of credit-generating emission points in an emissions average in order to increase the likelihood of being in compliance.

(ii) The initial demonstration in the Emissions Averaging Plan or operating permit application that credit-generating emission points will be capable of generating sufficient credits to offset the debits from the debit-generating emission points shall be made under representative operating conditions. After the compliance date, actual operating data will be used for all debit and credit calculations.

(4) Demonstrate that debits calculated for a quarterly (3-month) period according to paragraph (g) of this section are not more than 1.30 times the credits for the same period calculated according to paragraph (h) of this section. Compliance for the quarter shall be determined based on the ratio of credits and debits from that quarter, with 30 percent more debits than credits allowed on a quarterly basis.

(5) Record and report quarterly and annual credits and debits in the Periodic Reports as specified in §63.1335(e)(6). Every fourth Periodic Report shall include a certification of compliance with the emissions averaging provisions as required by §63.1335(e)(6)(x)(C)(*2*).

(f) Debits and credits shall be calculated in accordance with the methods and procedures specified in paragraphs (g) and (h) of this section, respectively, and shall not include emissions during the following periods:

(1) Emissions during periods of start-up, shutdown, and malfunction, as described in the Start-up, Shutdown, and Malfunction Plan.

(2) Emissions during periods of monitoring excursions, as defined in

§ 63.1334(d). For these periods, the calculation of monthly credits and debits shall be adjusted as specified in paragraphs (f)(2)(i) through (f)(2)(iii) of this section.

(i) No credits would be assigned to the credit-generating emission point.

(ii) Maximum debits would be assigned to the debit-generating emission point.

(iii) The owner or operator may demonstrate to the Administrator that full or partial credits or debits should be assigned using the procedures in paragraph (l) of this section.

(g) Debits are generated by the difference between the actual emissions from a Group 1 emission point that is uncontrolled or is controlled to a level less stringent than the applicable reference control technology or standard and the emissions allowed for the Group 1 emission point. Said Group 1 emission points are identified in paragraphs (c)(3) through (c)(5) of this section. Debits shall be calculated as follows:

(1) Source-wide debits shall be calculated using Equation 28 of this subpart. Debits and all terms of Equation 28 of this subpart are in units of megagrams per month:

$$\begin{aligned}\text{Debits} = &\sum_{i=1}^{n}\left(\text{ECPV}_{\text{iACTUAL}} - (0.02)\ \text{ECPV}_{\text{iu}}\right) + \sum_{j=1}^{n}\left(\text{ECPVS}_{\text{jACTUAL}} - \text{ECPVS}_{\text{jSTD}}\right)\\ &+ \sum_{i=1}^{n}\left(\text{ES}_{\text{iACTUAL}} - (b)\ \text{ES}_{\text{iu}}\right) + \sum_{i=1}^{n}\left(\text{EWW}_{\text{iACTUAL}} - \text{EWW}_{\text{ic}}\right)\\ &+ \sum_{i=1}^{n}\left(\text{EBPV}_{\text{iACTUAL}} - (0.10)\ \text{EBPV}_{\text{iu}}\right) + \sum_{i=1}^{n}\left(\text{EABV}_{\text{iACTUAL}} - (0.10)\ \text{EABV}_{\text{iu}}\right) \qquad \text{[Eq. 28]}\end{aligned}$$

Where:

$ECPV_{iACTUAL}$ = Emissions from each Group 1 continuous process vent i subject to § 63.1315 that is uncontrolled or is controlled to a level less stringent than the applicable reference control technology. $ECPV_{iACTUAL}$ is calculated according to paragraph (g)(2) of this section.

$(0.02)ECPV_{iu}$ = Emissions from each Group 1 continuous process vent i subject to § 63.1315 if the applicable reference control technology had been applied to the uncontrolled emissions. $ECPV_{iu}$ is calculated according to paragraph (g)(2) of this section.

$ECPVS_{jACTUAL}$ = Emissions from Group 1 continuous process vents subject to § 63.1316(b)(1)(i), (b)(1)(ii), (b)(2)(i), (b)(2)(ii), or (c)(1) located in the collection of process sections j within the affected source that are uncontrolled or controlled to a level less stringent than the applicable standard. $ECPVS_{jACTUAL}$ is calculated according to paragraph (g)(3) of this section.

$ECPVS_{jSTD}$ = Emissions from Group 1 continuous process vents subject to § 63.1316(b)(1)(i), (b)(1)(ii), (b)(2)(i), (b)(2)(ii), or (c)(1) located in the collection of process sections j within the affected source if the applicable standard had been applied to the uncontrolled emissions. $ECPVS_{jSTD}$ is calculated according to paragraph (g)(3) of this section.

$ES_{iACTUAL}$ = Emissions from each Group 1 storage vessel i that is uncontrolled or is controlled to a level less stringent than the applicable reference control technology or standard. $ES_{iACTUAL}$ is calculated according to paragraph (g)(4) of this section.

$(BL)ES_{iu}$ = Emissions from each Group 1 storage vessel i if the applicable reference control technology or standard had been applied to the uncontrolled emissions. ES_{iu} is calculated according to paragraph (g)(4) of this section. For calculating emissions, BL = 0.05 for each Group 1 storage vessel i subject to § 63.1314(a); and BL = 0.02 for each storage vessel i subject to § 63.1314(c).

$EWW_{iACTUAL}$ = Emissions from each Group 1 wastewater stream i that is uncontrolled or is controlled to a level less stringent than the applicable reference control technology. $EWW_{iACTUAL}$ is calculated according to paragraph (g)(5) of this section.

EWW_{ic} = Emissions from each Group 1 wastewater stream i if the reference control technology had been applied to the uncontrolled emissions. EWW_{ic} is calculated according to paragraph (g)(5) of this section.

$EBPV_{iACTUAL}$ = Emissions from each Group 1 batch process vent i that is uncontrolled or

is controlled to a level less stringent than the applicable standard. $EBPV_{ACTUAL}$ is calculated according to paragraph (g)(6) of this section.

(0.10)$EBPV_{iu}$ = Emissions from each Group 1 batch process vent i if the applicable standard had been applied to the uncontrolled emissions. $EBPV_{iu}$ is calculated according to paragraph (g)(6) of this section.

$EABV_{iACTUAL}$ = Emissions from each Group 1 aggregate batch vent stream i that is uncontrolled or is controlled to a level less stringent than the applicable standard. $EABPV_{iACTUAL}$ is calculated according to paragraph (g)(7) of this section.

(0.10)$EABV_{iu}$ = Emissions from each Group 1 aggregate batch vent stream i if the applicable standard had been applied to the uncontrolled emissions. $EABV_{iu}$ is calculated according to paragraph (g)(7) of this section.

n = The number of emission points being included in the emissions average.

(2) Emissions from continuous process vents subject to §63.1315 shall be calculated as follows:

(i) For purposes of determining continuous process vent stream flow rate, organic HAP concentrations, and temperature, the sampling site shall be after the final product recovery device, if any recovery devices are present; before any control device (for continuous process vents, recovery devices shall not be considered control devices); and before discharge to the atmosphere. Method 1 or 1A, 40 CFR part 60, appendix A, shall be used for selection of the sampling site.

(ii) $ECPV_{iu}$ for each continuous process vent i shall be calculated using Equation 29 of this subpart.

$$ECPV_{iu} = \left(2.494 \times 10^{-9}\right) Qh \left(\sum_{j=1}^{n} C_j M_j\right) \qquad [\text{Eq. } 29]$$

where:

$ECPV_{iu}$=Uncontrolled continuous process vent emission rate from continuous process vent i, megagrams per month.

Q=Vent stream flow rate, dry standard cubic meters per minute, measured using Method 2, 2A, 2C, or 2D, 40 CFR part 60, appendix A, as appropriate.

h=Monthly hours of operation during which positive flow is present in the continuous process vent, hours per month.

Cj=Concentration, parts per million by volume, dry basis, of organic HAP j as measured by Method 18, 40 CFR part 60, appendix A.

Mj=Molecular weight of organic HAP j, gram per gram-mole.

n=Number of organic HAP in stream.

(A) The values of Q and Cj shall be determined during a performance test conducted under representative operating conditions. The values of Q and Cj shall be established in the Notification of Compliance Status and shall be updated as provided in paragraph (g)(2)(ii)(B) of this section.

(B) If there is a change in capacity utilization other than a change in monthly operating hours, or if any other change is made to the process or product recovery equipment or operation such that the previously measured values of Q and Cj are no longer representative, a new performance test shall be conducted to determine new representative values of Q and Cj. These new values shall be used to calculate debits and credits from the time of the change forward, and the new values shall be reported in the next Periodic Report.

(iii) The following procedures and equations shall be used to calculate $ECPV_{iACTUAL}$:

(A) If the continuous process vent is not controlled by a control device or pollution prevention measure, $ECPV_{iACTUAL}$=$ECPV_{iu}$, where $ECPV_{iu}$ is calculated according to the procedures in paragraphs (g)(2)(i) and (g)(2)(ii) of this section.

(B) If the continuous process vent is controlled using a control device or a

pollution prevention measure achieving less than 98 percent reduction, calculate $ECPV_{iACTUAL}$ using Equation 30 of this subpart.

$$ECPV_{iACTUAL} = ECPV_{iu}\left(1 - \frac{\text{Percent reduction}}{100\%}\right) \qquad [\text{Eq. } 30]$$

(*1*) The percent reduction shall be measured according to the procedures in § 63.116 if a combustion control device is used. For a flare meeting the criteria in § 63.116(a), or a boiler or process heater meeting the criteria in § 63.116(b), the percent reduction shall be 98 percent. If a noncombustion control device is used, percent reduction shall be demonstrated by a performance test at the inlet and outlet of the device, or, if testing is not feasible, by a control design evaluation and documented engineering calculations.

(*2*) For determining debits from Group 1 continuous process vents, product recovery devices shall not be considered control devices and cannot be assigned a percent reduction in calculating $ECPV_{iACTUAL}$. The sampling site for measurement of uncontrolled emissions is after the final product recovery device. However, as provided in § 63.113(a)(3), a Group 1 continuous process vent may add sufficient product recovery to raise the TRE index value above 1.0 or, for Group 1 continuous process vents at an existing affected source producing MBS, above 3.7, thereby becoming a Group 2 continuous process vent. Such a continuous process vent would not be a Group 1 continuous process vent and would, therefore, not be included in determining debits under this paragraph (g)(2)(iii)(B)(*2*).

(*3*) Procedures for calculating the percent reduction of pollution prevention measures are specified in paragraph (j) of this section.

(3) Emissions from continuous process vents located in the collection of process sections within the affected source subject to § 63.1316 (b)(1)(i), (b)(1)(ii), (b)(2)(i), (b)(2)(ii), or (c)(1) shall be calculated as follows:

(i) The total organic HAP emissions from continuous process vents located in the collection of process sections j within the affected source, $ECPVS_{jACTUAL}$, shall be calculated as follows. The procedures in paragraph (g)(2)(iii) of this section shall be used to determine the organic HAP emissions for each individual continuous process vent, except that paragraph (g)(2)(iii)(B)(*2*) of this section shall not apply and the sampling site shall be after those recovery devices installed as part of normal operation; before any add-on control devices (i.e., those required by regulation); and prior to discharge to the atmosphere. Then, individual continuous process vent emissions shall be summed to determine $ECPVS_{jACTUAL}$.

(ii)(A) ECPVSjstd shall be calculated using Equation 31 of this subpart.

$$ECPVS_{jstd} = \left(EF_{std}\right)\left(PP_j\right) \qquad [\text{Eq. } 31]$$

where:

$ECPVS_{jstd}$=Emissions if the applicable standard had been applied to the uncontrolled emissions, megagrams per month.

EF_{std}=0.000018 Mg organic HAP/Mg of product, if the collection of process sections within the affected source is subject to § 63.1316(b)(1)(i).

=0.00002 Mg organic HAP/Mg of product, if the collection of process sections within the affected source is subject to § 63.1316 (b)(1)(ii) or (b)(2)(ii).

=0.00004 Mg organic HAP/Mg of product, if the collection of process sections within the affected source is subject to § 63.1316(b)(2)(i).

=0.0000036 Mg organic HAP/Mg of product, if the collection of process sections within the affected source is subject to § 63.1316(c)(1).

PPj=Polymer produced, Mg/month, for the collection of process sections j within the affected source, as calculated according to paragraph (g)(3)(ii)(B) of this section.

(B) The amount of polymer produced, Mg per month, for the collection of process sections j within the affected source shall be determined by determining the weight of polymer pulled from the process line(s) during a 30-day period. The polymer produced shall be determined by direct measurement or by an alternate methodology, such as materials balance. If an alternate methodology is used, a description of the methodology, including all procedures, data, and assumptions shall be submitted as part of the Emissions Averaging Plan required by § 63.1335(e)(4).

(C) Alternatively, $ECPVS_{jstd}$ for continuous process vents located in the collection of process sections within the affected source subject to § 63.1316(c)(1) may be calculated using the procedures in paragraph (g)(2)(i) and (g)(2)(ii) of this section to determine the organic HAP emissions for each individual continuous process vent, except that the sampling site shall be after recovery devices installed as part of normal operation; before any add-on control devices (i.e., those required by regulation); and prior to discharge to the atmosphere. Then, individual continuous process vent emissions shall be summed and multiplied by 0.02 to determine $ECPVS_{jstd}$.

(4) Emissions from storage vessels shall be calculated using the procedures specified in § 63.150(g)(3).

(5) Emissions from wastewater streams shall be calculated using the procedures in § 63.150(g)(5).

(6) Emissions from batch process vents shall be calculated as follows:

(i) $EBPV_{iu}$ for each batch process vent i shall be calculated using the procedures specified in § 63.1323(b).

(ii) The following procedures and equations shall be used to determine $EBPV_{iACTUAL}$:

(A) If the batch process vent is not controlled by a control device or pollution prevention measure, $EBPV_{iACTUAL}=EBPV_{iu}$, where $EBPV_{iu}$ is calculated using the procedures in § 63.1323(b).

(B) If the batch process vent is controlled using a control device or a pollution prevention measure achieving less than 90 percent reduction for the batch cycle, calculate $EBPV_{iACTUAL}$ using Equation 32 of this subpart, where percent reduction is for the batch cycle.

$$EBPV_{iACTUAL} = EBPV_{iu}\left(1 - \frac{\text{Percent reduction}}{100\%}\right) \qquad [\text{Eq. } 32]$$

(*1*) The percent reduction for the batch cycle shall be calculated according to the procedures in § 63.1325(c)(2).

(*2*) The percent reduction for control devices shall be calculated according to the procedures in § 63.1325 (c)(2)(i) through (c)(2)(iii).

(*3*) The percent reduction of pollution prevention measures shall be calculated using the procedures specified in paragraph (j) of this section.

(7) Emissions from aggregate batch vent streams shall be calculated as follows:

(i) For purposes of determining aggregate batch vent stream flow rate, organic HAP concentrations, and temperature, the sampling site shall be before any control device and before discharge to the atmosphere. Method 1 or 1A, 40 CFR part 60, appendix A, shall be used for selection of the sampling site.

(ii) $EABV_{iu}$ for each aggregate batch vent stream i shall be calculated using Equation 33 of this subpart.

$$EABV_{iu} = \left(2.494 \times 10^{-9}\right) Qh \left(\sum_{j=1}^{n} C_j M_j\right) \qquad [\text{Eq. } 33]$$

where:

$EABV_{iu}$=Uncontrolled aggregate batch vent stream emission rate from aggregate batch vent stream i, megagrams per month.

Q=Vent stream flow rate, dry standard cubic meters per minute, measured using Method 2, 2A, 2C, or 2D, 40 CFR part 60, appendix A, as appropriate.

h=Monthly hours of operation during which positive flow is present from the aggregate batch vent stream, hours per month.

C_j=Concentration, parts per million by volume, dry basis, of organic HAP j as measured by Method 18, 40 CFR part 60, appendix A.

M_j=Molecular weight of organic HAP j, gram per gram-mole.

n=Number of organic HAP in the stream.

(A) The values of Q and Cj shall be determined during a performance test conducted under representative operating conditions. The values of Q and Cj shall be established in the Notification of Compliance Status and shall be updated as provided in paragraph (g)(7)(ii)(B) of this section.

(B) If there is a change in capacity utilization other than a change in monthly operating hours, or if any other change is made to the process or product recovery equipment or operation such that the previously measured values of Q and C_j are no longer representative, a new performance test shall be conducted to determine new representative values of Q and C_j. These new values shall be used to calculate debits and credits from the time of the change forward, and the new values shall be reported in the next Periodic Report.

(iii) The following procedures and equations shall be used to calculate $EABV_{iACTUAL}$:

(A) If the aggregate batch vent stream is not controlled by a control device or pollution prevention measure, $EABV_{iACTUAL}$ = $EABV_{iu}$, where $EABV_{iu}$ is calculated according to the procedures in paragraphs (g)(7)(i) and (g)(7)(ii) of this section.

(B) If the aggregate batch vent stream is controlled using a control device or a pollution prevention measure achieving less than 90 percent reduction, calculate $EABV_{iACTUAL}$ using Equation 34 of this subpart.

$$EABV_{iACTUAL} = EABV_{iu}\left(1 - \frac{\text{Percent reduction}}{100\%}\right) \qquad [\text{Eq. } 34]$$

(*1*) The percent reduction for control devices shall be determined according to the procedures in § 63.1325(e).

(*2*) The percent reduction for pollution prevention measures shall be calculated according to the procedures specified in paragraph (j) of this section.

(h) Credits are generated by the difference between emissions that are allowed for each Group 1 and Group 2 emission point and the actual emissions from that Group 1 or Group 2 emission point that has been controlled after November 15, 1990 to a level more stringent than what is required by this subpart or any other State or Federal rule or statute. Said Group 1 and Group 2 emission points are identified in paragraphs (c)(1) through (c)(5) of this section. Credits shall be calculated using Equation 35 of this subpart.

(1) Sourcewide credits shall be calculated using Equation 35 of this subpart. Credits and all terms of Equation 35 of this subpart are in units of megagrams per month, and the baseline date is November 15, 1990:

$$\begin{aligned}\text{Credits} = {} & D\sum_{i=1}^{n}\left((0.02)\ ECPV1_{iu} - ECPV1_{iACTUAL}\right) + D\sum_{j=1}^{n}\left(ECPVS1_{jSTD} - ECPVS1_{jACTUAL}\right) \\ & + D\sum_{i=1}^{m}\left(ECPV2_{iBASE} - ECPV2_{iACTUAL}\right) + D\sum_{j=1}^{m}\left(ECPVS2_{jBASE} - ECPVS2_{jACTUAL}\right) \\ & + D\sum_{i=1}^{n}\left((BL)\ ES1_{iu} - ES1_{iACTUAL}\right) + D\sum_{i=1}^{m}\left(ES2_{iBASE} - ES2_{iACTUAL}\right) \\ & + D\sum_{i=1}^{n}\left(EWW1_{ic} - EWW1_{iACTUAL}\right) + D\sum_{i=1}^{m}\left(EWW2_{iBASE} - EWW2_{iACTUAL}\right) \\ & + D\sum_{i=1}^{n}\left((0.10)\ EBPV1_{iu} - EBPV1_{iACTUAL}\right) + D\sum_{i=1}^{n}\left((0.10)\ EABV1_{iu} - EABV1_{iACTUAL}\right) \\ & + D\sum_{i=1}^{m}\left(EBPV2_{iBASE} - EBPV2_{iACTUAL}\right) + D\sum_{i=1}^{m}\left(EABV2_{iBASE} - EABV2_{iACTUAL}\right) \qquad \text{[Eq. 35]}\end{aligned}$$

Where:

D = Discount factor = 0.9 for all credit generating emission points except those controlled by a pollution prevention measure; discount factor = 1.0 for each credit generating emission point controlled by a pollution prevention measure (i.e., no discount provided).

$ECPV1_{iACTUAL}$ = Emissions for each Group 1 continuous process vent i subject to §63.1315 that is controlled to a level more stringent than the reference control technology. $ECPV1_{iACTUAL}$ is calculated according to paragraph (h)(2) of this section.

$(0.02)ECPV1_{iu}$ = Emissions from each Group 1 continuous process vent i subject to §63.1315 if the applicable reference control technology had been applied to the uncontrolled emissions. $ECPV1_{iu}$ is calculated according to paragraph (h)(2) of this section.

$ECPVS1_{jSTD}$ = Emissions from Group 1 continuous process vents subject to §63.1316(b)(1)(i), (b)(1)(ii), (b)(2)(i), (b)(2)(ii), or (c)(1) located in the collection of process sections j within the affected source if the applicable standard had been applied to the uncontrolled emissions. $ECPVS1_{jSTD}$ is calculated according to paragraph (h)(3) of this section.

$ECPVS1_{jACTUAL}$ = Emissions from Group 1 continuous process vents subject to §63.1316(b)(1)(i), (b)(1)(ii), (b)(2)(i), (b)(2)(ii), or (c)(1) located in the collection of process sections j within the affected source that are controlled to a level more stringent than the applicable standard. $ECPVS1_{jACTUAL}$ is calculated according to paragraph (h)(3) of this section.

$ECPV2_{iACTUAL}$ = Emissions from each Group 2 continuous process vent i subject to §63.1315 that is controlled. $ECPV2_{iACTUAL}$ is calculated according to paragraph (h)(2) of this section.

$ECPV2_{iBASE}$ = Emissions from each Group 2 continuous process vent i subject to §63.1315 at the baseline date. $ECPV2_{iBASE}$ is calculated according to paragraph (h)(2) of this section.

$ECPVS2_{jBASE}$ = Emissions from Group 2 continuous process vents subject to §63.1316(b)(1)(i) located in the collection of material recovery sections j within the affected source at the baseline date. $ECPVS2_{jBASE}$ is calculated according to paragraph (h)(3) of this section.

$ECPVS2_{jACTUAL}$ = Emissions from Group 2 continuous process vents subject to §63.1316(b)(1)(i) located in the collection of material recovery sections j within the affected source that are controlled. $ECPVS2_{jACTUAL}$ is calculated according to paragraph (h)(3) of this section.

$ES1_{iACTUAL}$ = Emissions from each Group 1 storage vessel i that is controlled to a level more stringent than the applicable reference control technology or standard. $ES1_{iACTUAL}$ is calculated according to paragraph (h)(4) of this section.

$(BL)ES1_{iu}$ = Emissions from each Group 1 storage vessel i if the applicable reference control technology or standard had been applied to the uncontrolled emissions. $ES1_{iu}$ is calculated according to paragraph (h)(4) of this section. For calculating these emissions, BL = 0.05 for each Group 1 storage vessel i subject to §63.1314(a); and BL = 0.02 for each storage vessel i subject to §63.1314(c).

$ES2_{iACTUAL}$ = Emissions from each Group 2 storage vessel i that is controlled. $ES2_{iACTUAL}$ is calculated according to paragraph (h)(4) of this section.

$ES2_{iBASE}$ = Emissions from each Group 2 storage vessel i at the baseline date. $ES2_{iBASE}$ is calculated according to paragraph (h)(4) of this section.

$EWW1_{iACTUAL}$ = Emissions from each Group 1 wastewater stream i that is controlled to a level more stringent than the reference control technology. $EWW1_{iACTUAL}$ is calculated according to paragraph (h)(5) of this section.

$EWW1_{ic}$ = Emissions from each Group 1 wastewater stream i if the reference control technology had been applied to the uncontrolled emissions. $EWW1_{ic}$ is calculated

according to paragraph (h)(5) of this section.

$EWW2_{iACTUAL}$ = Emissions from each Group 2 wastewater stream i that is controlled. $EWW2_{iACTUAL}$ is calculated according to paragraph (h)(5) of this section.

$EWW2_{iBASE}$ = Emissions from each Group 2 wastewater stream i at the baseline date. $EWW2_{iBASE}$ is calculated according to paragraph (h)(5) of this section.

$(0.10)EBPV1_{iu}$ = Emissions from each Group 1 batch process vent i if the applicable standard had been applied to the uncontrolled emissions. $EBPV1_{iu}$ is calculated according to paragraph (h)(6) of this section.

$EBPV1_{iACTUAL}$ = Emissions from each Group 1 batch process vent i that is controlled to a level more stringent than the applicable standard. $EBPV1_{iACTUAL}$ is calculated according to paragraph (h)(6) of this section.

$(0.10)EABV1_{iu}$ = Emissions from each Group 1 aggregate batch vent stream i if the applicable standard had been applied to the uncontrolled emissions. $EABV1_{iu}$ is calculated according to paragraph (h)(7) of this section.

$EABV1_{iACTUAL}$ = Emissions from each Group 1 aggregate batch vent stream i that is controlled to a level more stringent than the applicable standard. $EABV1_{iACTUAL}$ is calculated according to paragraph (h)(7) of this section.

$EBPV2_{iBASE}$ = Emissions from each Group 2 batch process vent i at the baseline date. $EBPV2_{iBASE}$ is calculated according to paragraph (h)(6) of this section.

$EBPV2_{iACTUAL}$ = Emissions from each Group 2 batch process vent i that is controlled. $EBPV2_{iACTUAL}$ is calculated according to paragraph (h)(6) of this section.

$EABV2_{iBASE}$ = Emissions from each Group 2 aggregate batch vent stream i at the baseline date. $EABV2_{iBASE}$ is calculated according to paragraph (h)(7) of this section.

$EABV2_{iACTUAL}$ = Emissions from each Group 2 aggregate batch vent stream i that is controlled. $EABV2_{iACTUAL}$ is calculated according to paragraph (h)(7) of this section.

n = Number of Group 1 emission points included in the emissions average. The value of n is not necessarily the same for continuous process vents, batch process vents, aggregate batch vent streams, storage vessels, wastewater streams, or the collection of process sections within the affected source.

m = Number of Group 2 emission points included in the emissions average. The value of m is not necessarily the same for continuous process vents, batch process vents, aggregate batch vent streams, storage vessels, wastewater streams, or the collection of process sections within the affected source.

(i) Except as specified in paragraph (h)(1)(iv) of this section, for an emission point controlled using a reference control technology, the percent reduction for calculating credits shall be no greater than the nominal efficiency associated with the reference control technology, unless a higher nominal efficiency is assigned as specified in paragraph (h)(1)(ii) of this section.

(ii) For an emission point controlled to a level more stringent than the reference control technology, the nominal efficiency for calculating credits shall be assigned as described in paragraph (i) of this section. A reference control technology may be approved for use in a different manner and assigned a higher nominal efficiency according to the procedures in paragraph (i) of this section.

(iii) For an emission point controlled using a pollution prevention measure, the nominal efficiency for calculating credits shall be as determined as described in paragraph (j) of this section.

(iv) For Group 1 and Group 2 batch process vents and Group 1 and Group 2 aggregate batch vent streams, the percent reduction for calculating credits shall be the percent reduction determined according to the procedures in paragraphs (h)(6)(ii) and (h)(6)(iii) of this section for batch process vents and paragraphs (h)(7)(ii) and (h)(7)(iii) of this section for aggregate batch vent streams.

(2) Emissions from continuous process vents subject to § 63.1315 shall be determined as follows:

(i) Uncontrolled emissions from Group 1 continuous process vents ($ECPV1_{iu}$) shall be calculated according to the procedures and equation for $ECPV_{iu}$ in paragraphs (g)(2)(i) and (g)(2)(ii) of this section.

(ii) Actual emissions from Group 1 continuous process vents controlled using a technology with an approved nominal efficiency greater than 98 percent or a pollution prevention measure achieving greater than 98 percent emission reduction ($ECPV1_{iACTUAL}$) shall be calculated using Equation 36 of this subpart.

$$ECPV1_{iACTUAL} = ECPV1_{iu}\left(1 - \frac{\text{Nominal efficiency \%}}{100\%}\right) \quad [\text{Eq. 36}]$$

(iii) The following procedures shall be used to calculate actual emissions from Group 2 continuous process vents ($ECPV2_{iACTUAL}$):

(A) For a Group 2 continuous process vent controlled by a control device, a recovery device applied as a pollution prevention project, or a pollution prevention measure, where the control achieves a percent reduction less than or equal to 98 percent reduction, use Equation 37 of this subpart.

$$ECPV2_{iACTUAL} = ECPV2_{iu}\left(1 - \frac{\text{Percent reduction}}{100\%}\right) \quad [\text{Eq. 37}]$$

(*1*) $ECPV2_{iu}$ shall be calculated according to the equations and procedures for $ECPV_{iu}$ in paragraphs (g)(2)(i) and (g)(2)(ii) of this section, except as provided in paragraph (h)(2)(iii)(A)(*3*) of this section.

(*2*) The percent reduction shall be calculated according to the procedures in paragraphs (g)(2)(iii)(B)(*1*) through (g)(2)(iii)(B)(*3*) of this section, except as provided in paragraph (h)(2)(iii)(A)(*4*) of this section.

(*3*) If a recovery device was added as part of a pollution prevention project, $ECPV2_{iu}$ shall be calculated prior to that recovery device. The equation for $ECPV_{iu}$ in paragraph (g)(2)(ii) of this section shall be used to calculate $ECPV2_{iu}$; however, the sampling site for measurement of vent stream flow rate and organic HAP concentration shall be at the inlet of the recovery device.

(*4*) If a recovery device was added as part of a pollution prevention project, the percent reduction shall be demonstrated by conducting a performance test at the inlet and outlet of that recovery device.

(B) For a Group 2 continuous process vent controlled using a technology with an approved nominal efficiency greater than 98 percent or a pollution prevention measure achieving greater than 98 percent reduction, use Equation 38 of this subpart.

$$ECPV2_{iACTUAL} = ECPV2_{iu}\left(1 - \frac{\text{Nominal efficiency \%}}{100\%}\right) \quad [\text{Eq. 38}]$$

(iv) Emissions from Group 2 continuous process vents at baseline shall be calculated as follows:

(A) If the continuous process vent was uncontrolled on November 15, 1990, $ECPV2_{iBASE}=ECPV2_{iu}$ and shall be calculated according to the procedures and equation for $ECPV_{iu}$ in paragraphs (g)(2)(i) and (g)(2)(ii) of this section.

(B) If the continuous process vent was controlled on November 15, 1990, use Equation 39 of this subpart.

$$ECPV2_{iBASE} = ECPV2_{iu}\left(1 - \frac{\text{Percent reduction}}{100\%}\right) \quad [\text{Eq. 39}]$$

(*1*) $ECPV2_{iu}$ is calculated according to the procedures and equation for $ECPV_{iu}$ in paragraphs (g)(2)(i) and (g)(2)(ii) of this section.

(*2*) The percent reduction shall be calculated according to the procedures specified in paragraphs (g)(2)(iii)(B)(*1*) through (g)(2)(iii)(B)(*3*) of this section.

(C) If a recovery device was added as part of a pollution prevention project initiated after November 15, 1990, $ECPV2_{iBASE}=ECPV2_{iu}$, where $ECPV2_{iu}$ is calculated according to paragraph (h)(2)(iii)(A)(*3*) of this section.

(3) Emissions from continuous process vents subject to § 63.1316(b)(1)(i), (b)(1)(ii), (b)(2)(i), (b)(2)(ii), or (c)(1) shall be determined as follows:

(i) Emissions from Group 1 continuous process vents located in the collection of process sections j within the affected source if the applicable standard had been applied to the uncontrolled emissions ($ECPVS1_{jstd}$) shall be calculated according to paragraph (g)(3)(ii) of this section.

(ii) Actual emissions from Group 1 continuous process vents located in the collection of process sections j within the affected source controlled to a level more stringent than the applicable standard ($ECPVS1_{jACTUAL}$) shall be calculated using the procedures in paragraphs (g)(3)(ii)(A) and (g)(3)(ii)(B) of this section, except that the actual emission level, Mg organic HAP/Mg of product, shall be used as EF_{std} in Equation 31 of this subpart. Further, $ECPVS1_{jACTUAL}$ for continuous process vents subject to § 63.1316(c)(1) controlled in accordance with § 63.1316(c)(1)(iii) shall be calculated using the procedures in paragraph (h)(2)(ii) of this section for individual continuous process vents and then summing said emissions to get $ECPVS1_{jACTUAL}$, except that the sampling site shall be after recovery devices installed as part of normal operation; before any add-on control devices (i.e., those required by regulation); and prior to discharge to the atmosphere.

(iii) Actual emissions from Group 2 continuous process vents subject to § 63.1316(b)(1)(i) located in the collection of material recovery sections j within the affected source ($ECPVS2_{jACTUAL}$) shall be calculated using the procedures in paragraphs (g)(3)(ii)(A) and (g)(3)(ii)(B) of this section, except that the actual emission level, Mg organic HAP/Mg of product, shall be used as EF_{std} in Equation 31 of this subpart.

(iv) Emissions from Group 2 continuous process vents subject to § 63.1316(b)(1)(i) located in the collection of material recovery sections j within the affected source at baseline ($ECPVS2_{jBASE}$) shall be calculated using the procedures in paragraphs (g)(3)(ii)(A) and (g)(3)(ii)(B) of this section, except that the actual emission level, Mg organic HAP/Mg of product, at baseline shall be used as EF_{std} in Equation 31 of this subpart.

(4)(i) Emissions from storage vessels shall be calculated using the procedures specified in § 63.150(h)(3).

(ii) Actual emissions from Group 1 storage vessels at an existing affected source producing ASA/AMSAN subject to § 63.1314(c) using a technology with an approved nominal efficiency greater than 98 percent or a pollution prevention measure achieving greater than 98 percent emission reduction shall be calculated using the procedures specified in § 63.150(h)(3)(ii).

(5) Emissions from wastewater streams shall be calculated using the procedures specified in § 63.150(h)(5).

(6) Emissions from batch process vents shall be determined as follows:

(i) Uncontrolled emissions from Group 1 batch process vents ($EBPV1_{iu}$) shall be calculated using the procedures § 63.1323(b).

(ii) Actual emissions from Group 1 batch process vents controlled to a level more stringent than the standard ($EBPV1_{iACTUAL}$) shall be calculated using Equation 40 of this subpart, where percent reduction is for the batch cycle:

$$EBPV1_{iACTUAL} = EBPV1_{iu}\left(1 - \frac{\text{Percent reduction}}{100\%}\right) \qquad \text{[Eq. S 40]}$$

(A) The percent reduction for the batch cycle shall be calculated according to the procedures in §63.1325(c)(2).

(B) The percent reduction for control devices shall be determined according to the procedures in §63.1325(c)(2)(i) through (c)(2)(iii).

(C) The percent reduction of pollution prevention measures shall be calculated using the procedures specified in paragraph (j) of this section.

(iii) Actual emissions from Group 2 batch process vents ($EBPV2_{iACTUAL}$) shall be calculated using Equation 41 of this subpart and the procedures in paragraphs (h)(6)(ii)(A) through (h)(6)(ii)(C) of this section. $EBPV2_{iu}$ shall be calculated using the procedures specified in §63.1323(b).

$$EBPV2_{iACTUAL} = EBPV2_{iu}\left(1 - \frac{\text{Percent reduction}}{100\%}\right) \qquad \text{[Eq. 41]}$$

(iv) Emissions from Group 2 batch process vents at baseline ($EBPV2_{iBASE}$) shall be calculated as follows:

(A) If the batch process vent was uncontrolled on November 15, 1990, $EBPV2_{iBASE}=EBPV2_{iu}$ and shall be calculated using the procedures specified in §63.1323(b).

(B) If the batch process vent was controlled on November 15, 1990, use Equation 42 of this subpart and the procedures in paragraphs (h)(6)(ii)(A) through (h)(6)(ii)(C) of this section. $EBPV2_{iu}$ shall be calculated using the procedures specified in §63.1323(b).

$$EBPV2_{iBASE} = EBPV2_{iu}\left(1 - \frac{\text{Percent reduction}}{100\%}\right) \qquad \text{[Eq. 42]}$$

(7) Emissions from aggregate batch vent streams shall be determined as follows:

(i) Uncontrolled emissions from Group 1 aggregate batch vent streams ($EABV1_{iu}$) shall be calculated according to the procedures and equation for $EABV_{iu}$ in paragraphs (g)(7)(i) and (g)(7)(ii) of this section.

(ii) Actual emissions from Group 1 aggregate batch vent streams controlled to a level more stringent than the standard ($EABV1_{iACTUAL}$) shall be calculated using Equation 43 of this subpart:

$$EABV1_{iACTUAL} = EABV1_{iu}\left(1 - \frac{\text{Percent reduction}}{100\%}\right) \qquad \text{[Eq. 43]}$$

(A) The percent reduction for control devices shall be determined according to the procedures in §63.1325(e).

(B) The percent reduction of pollution prevention measures shall be calculated using the procedures specified in paragraph (j) of this section.

(iii) Actual emissions from Group 2 aggregate batch vent streams ($EABV2_{iACTUAL}$) shall be calculated using Equation 44 of this subpart and the procedures in paragraphs (h)(7)(ii)(A) through (h)(7)(ii)(B) of this section. $EABV2_{iu}$ shall be calculated according to the equations and procedures for $EABV_{iu}$ in paragraphs (g)(7)(i) and (g)(7)(ii) of this section.

$$EABV2_{iACTUAL} = EABV2_{iu}\left(1 - \frac{\text{Percent reduction}}{100\%}\right) \qquad \text{[Eq. 44]}$$

(iv) Emissions from Group 2 aggregate batch vent streams at baseline shall be calculated as follows:

(A) If the aggregate batch vent stream was uncontrolled on November 15, 1990, $EABV2_{iBASE}=EABV2_{iu}$ and shall be calculated according to the procedures and equation for $EABV_{iu}$ in paragraphs (g)(7)(i) and (g)(7)(ii) of this section.

(B) If the aggregate batch vent stream was controlled on November 15, 1990, use Equation 45 of this subpart and the procedures in paragraphs (h)(7)(ii)(A) through (h)(7)(ii)(B) of this section. $EABV2_{iu}$ shall be calculated according to the equations and procedures for $EABV_{iu}$ in paragraphs (g)(7)(i) and (g)(7)(ii) of this section.

$$EABV2_{iBASE} = EABV2_{iu}\left(1 - \frac{\text{Percent reduction}}{100\%}\right) \qquad \text{[Eq. 45]}$$

(i) The following procedures shall be followed to establish nominal efficiencies for emission controls for storage vessels, continuous process vents, and process wastewater streams. The procedures in paragraphs (i)(1) through (i)(6) of this section shall be followed for control technologies that are different in use or design from the reference control technologies and achieve greater percent reductions than the percent efficiencies assigned to the reference control technologies in § 63.111.

(1) In those cases where the owner or operator is seeking permission to take credit for use of a control technology that is different in use or design from the reference control technology, and the different control technology will be used in more than three applications at a single plant-site, the owner or operator shall submit the information specified in paragraphs (i)(1)(i) through (i)(1)(iv) of this section, as specified in § 63.1335(e)(7)(ii), to the Director of the EPA Office of Air Quality Planning and Standards in writing:

(i) Emission stream characteristics of each emission point to which the control technology is or will be applied including the kind of emission point, flow, organic HAP concentration, and all other stream characteristics necessary to design the control technology or determine its performance.

(ii) Description of the control technology including design specifications.

(iii) Documentation demonstrating to the Administrator's satisfaction the control efficiency of the control technology. This may include performance test data collected using an appropriate EPA Method or any other method validated according to Method 301, 40 CFR part 63, appendix A, of this part. If it is infeasible to obtain test data, documentation may include a design evaluation and calculations. The engineering basis of the calculation procedures and all inputs and assumptions made in the calculations shall be documented.

(iv) A description of the parameter or parameters to be monitored to ensure that the control technology will be operated in conformance with its design and an explanation of the criteria used for selection of that parameter (or parameters).

(2) The Administrator shall determine within 120 days whether an application presents sufficient information to determine nominal efficiency. The Administrator reserves the right to request specific data in addition to the items listed in paragraph (i)(1) of this section.

(3) The Administrator shall determine within 120 days of the submittal of sufficient data whether a control technology shall have a nominal efficiency and the level of that nominal efficiency. If, in the Administrator's judgment, the control technology achieves a level of emission reduction greater than the reference control technology for a particular kind of emission point, the Administrator will publish a FEDERAL REGISTER notice establishing a nominal efficiency for the control technology.

(4) The Administrator may grant permission to take emission credits for use of the control technology. The Administrator may also impose requirements that may be necessary to ensure operation and maintenance to achieve the specified nominal efficiency.

(5) In those cases where the owner or operator is seeking permission to take credit for use of a control technology that is different in use or design from the reference control technology and the different control technology will be used in no more than three applications at a single plant site, the owner or operator shall submit the information listed in paragraphs (i)(1)(i) through (i)(1)(iv) of this section, as specified in §63.1335(e)(7)(ii), to the Administrator.

(i) In these instances, use and conditions for use of the control technology may be approved by the permitting authority as part of an operating permit application or modification. The permitting authority shall follow the procedures specified in paragraphs (i)(2) through (i)(4) of this section except that, in these instances, a FEDERAL REGISTER notice is not required to establish the nominal efficiency for the different technology.

(ii) If, in reviewing the application, the permitting authority believes the control technology has broad applicability for use by other affected sources, the permitting authority shall submit the information provided in the application to the Director of the EPA Office of Air Quality Planning and Standards. The Administrator shall review the technology for broad applicability and may publish a FEDERAL REGISTER notice; however, this review shall not affect the permitting authority's approval of the nominal efficiency of the control technology for the specific application.

(6) If, in reviewing an application for a control technology for an emission point, the Administrator or permitting authority determines the control technology is not different in use or design from the reference control technology, the Administrator or permitting authority shall deny the application.

(j) The following procedures shall be used for calculating the efficiency (percent reduction) of pollution prevention measures for storage vessels, continuous process vents, batch process vents, aggregate batch vent streams, and wastewater streams:

(1) A pollution prevention measure is any practice that meets the criteria of paragraphs (j)(1)(i) and (j)(1)(ii) of this section.

(i) A pollution prevention measure is any practice that results in a lesser quantity of organic HAP emissions per unit of product released to the atmosphere prior to out-of-process recycling, treatment, or control of emissions, while the same product is produced.

(ii) Pollution prevention measures may include: substitution of feedstocks that reduce organic HAP emissions; alterations to the production process to reduce the volume of materials released to the environment; equipment modifications; housekeeping measures; and in-process recycling that returns waste materials directly to production as raw materials. Production cutbacks do not qualify as pollution prevention.

(2) The emission reduction efficiency of pollution prevention measures implemented after November 15, 1990, may be used in calculating the actual emissions from an emission point in the debit and credit equations in paragraphs (g) and (h) of this section.

(i) For pollution prevention measures, the percent reduction used in the equations in paragraphs (g)(2) through (g)(7) of this section and paragraphs (h)(2) through (h)(7) of this section is the percent difference between the monthly organic HAP emissions for each emission point after the pollution prevention measure for the most recent month versus monthly emissions from the same emission point before the pollution prevention measure, adjusted by

the volume of product produced during the two monthly periods.

(ii) Equation 46 of this subpart shall be used to calculate the percent reduction of a pollution prevention measure for each emission point.

$$\text{Percent reduction} = \frac{E_B - \frac{(E_{pp})(P_B)}{P_{pp}}}{E_B} 100\% \qquad \text{[Eq. 46]}$$

where:

Percent reduction=Efficiency of pollution prevention measure (percent organic HAP reduction).

E_B=Monthly emissions before the pollution prevention measure, megagrams per month, determined as specified in paragraphs (j)(2)(ii)(A), (j)(2)(ii)(B), and (j)(2)(ii)(C) of this section.

E_{pp}=Monthly emissions after the pollution prevention measure, megagrams per month, as determined for the most recent month, determined as specified in either paragraphs (j)(2)(ii)(D) or (j)(2)(ii)(E) of this section.

P_B=Monthly production before the pollution prevention measure, megagrams per month, during the same period over which E_B is calculated.

P_{pp}=Monthly production after the pollution prevention measure, megagrams per month, as determined for the most recent month.

(A) The monthly emissions before the pollution prevention measure, E_B, shall be determined in a manner consistent with the equations and procedures in paragraphs (g)(2) and (g)(3) of this section for continuous process vents, paragraph (g)(4) of this section for storage vessels, paragraph (g)(6) of this section for batch process vents, and paragraph (g)(7) of this section for aggregate batch vent streams.

(B) For wastewater, E_B shall be calculated using Equation 47 of this subpart:

$$E_B = \sum_{i=1}^{n} \left[\left(6.0 * 10^{-8}\right) Q_{Bi} H_{Bi} \sum_{m=1}^{S} Fe_m HAP_{Bim} \right] \qquad \text{[Eq. 47]}$$

Where:

n = Number of wastewater streams.

Q_{Bi} = Annual average flow rate for wastewater stream i before the pollution prevention measure, defined and determined according to §63.144(c)(3), liters per minute, before implementation of the pollution prevention measure.

H_{Bi} = Number of hours per month that wastewater stream i was discharged before the pollution prevention measure, hours per month.

s = Total number of organic HAP in wastewater stream i.

F_{em} = Fraction emitted of organic HAP m in wastewater from Table 34 of subpart G of this part, dimensionless.

HAP_{Bim} = Annual average concentration of organic HAP m in wastewater stream i, defined and determined according to paragraph §63.150(g)(5)(i) of this section, before the pollution prevention measure, parts per million by weight, as measured before the implementation of the pollution measure.

(C) If the pollution prevention measure was implemented prior to September 12, 1996 records may be used to determine E_B.

(D) The monthly emissions after the pollution prevention measure, E_{pp}, may be determined during a performance

test or by a design evaluation and documented engineering calculations. Once an emissions-to-production ratio has been established, the ratio can be used to estimate monthly emissions from monthly production records.

(E) For wastewater, E_{pp} shall be calculated using Equation 48 of this subpart and n, Q_{ppi}, H_{ppi}, s, Fe_m, and HAP_{ppim} are defined and determined as described in paragraph (j)(2)(ii)(B) of this section, except that Q_{ppi}, H_{ppi}, and HAP_{ppim} shall be determined after the pollution prevention measure has been implemented.

$$E_{pp} = \sum_{i=1}^{n}\left[\left(6.0*10^{-8}\right)Q_{ppi}\ H_{ppi}\sum_{m=1}^{s}Fe_m\ HAP_{ppim}\right] \qquad \text{[Eq. 48]}$$

(iii) All equations, calculations, test procedures, test results, and other information used to determine the percent reduction achieved by a pollution prevention measure for each emission point shall be fully documented.

(iv) The same pollution prevention measure may reduce emissions from multiple emission points. In such cases, the percent reduction in emissions for each emission point shall be calculated.

(v) For the purposes of the equations in paragraphs (h)(2) through (h)(7) of this section used to calculate credits for emission points controlled more stringently than the reference control technology or standard, the nominal efficiency of a pollution prevention measure is equivalent to the percent reduction of the pollution prevention measure. When a pollution prevention measure is used, the owner or operator of an affected source is not required to apply to the Administrator for a nominal efficiency and is not subject to paragraph (i) of this section.

(k) The owner or operator shall demonstrate that the emissions from the emission points proposed to be included in the emissions average will not result in greater hazard or, at the option of the Administrator, greater risk to human health or the environment than if the emission points were controlled according to the provisions in §§ 63.1314, 63.1315, 63.1316 through 63.1320, 63.1321, and 63.1330.

(1) This demonstration of hazard or risk equivalency shall be made to the satisfaction of the Administrator.

(i) The Administrator may require owners and operators to use specific methodologies and procedures for making a hazard or risk determination.

(ii) The demonstration and approval of hazard or risk equivalency shall be made according to any guidance that the Administrator makes available for use.

(2) Owners and operators shall provide documentation demonstrating the hazard or risk equivalency of their proposed emissions average in their operating permit application or in their Emissions Averaging Plan if an operating permit application has not yet been submitted.

(3) An Emissions Averaging Plan that does not demonstrate hazard or risk equivalency to the satisfaction of the Administrator shall not be approved. The Administrator may require such adjustments to the Emissions Averaging Plan as are necessary in order to ensure that the emissions average will not result in greater hazard or risk to human health or the environment than would result if the emission points were controlled according to §§ 63.1314, 63.1315, 63.1316 through 63.1320, 63.1321, and 63.1330.

(4) A hazard or risk equivalency demonstration shall:

(i) Be a quantitative, bona fide chemical hazard or risk assessment;

(ii) Account for differences in chemical hazard or risk to human health or the environment; and

(iii) Meet any requirements set by the Administrator for such demonstrations.

(l) For periods of parameter monitoring excursions, an owner or operator may request that the provisions of paragraphs (l)(1) through (l)(4) of this

section be followed instead of the procedures in paragraphs (f)(2)(i) and (f)(2)(ii) of this section.

(1) The owner or operator shall notify the Administrator of monitoring excursions in the Periodic Reports as required in § 63.1335(e)(6).

(2) The owner or operator shall demonstrate that other types of monitoring data or engineering calculations are appropriate to establish that the control device for the emission point was operating in such a fashion to warrant assigning full or partial credits and debits. This demonstration shall be made to the Administrator's satisfaction, and the Administrator may establish procedures of demonstrating compliance that are acceptable.

(3) The owner or operator shall provide documentation of the excursion and the other type of monitoring data or engineering calculations to be used to demonstrate that the control device for the emission point was operating in such a fashion to warrant assigning full or partial credits and debits.

(4) The Administrator may assign full or partial credit and debits upon review of the information provided.

(m) For each emission point included in an emissions average, the owner or operator shall perform testing, monitoring, recordkeeping, and reporting equivalent to that required for Group 1 emission points complying with §§ 63.1314, 63.1315, 63.1316 through 63.1320, 63.1321, and 63.1330, as applicable. The specific requirements for continuous process vents, batch process vents, aggregate batch vent streams, storage vessels, and wastewater operations that are included in an emissions average for an affected source are identified in paragraphs (m)(1) through (m)(7) of this section.

(1) For each continuous process vent subject to § 63.1315 equipped with a flare, incinerator, boiler, or process heater, as appropriate to the control technique:

(i) Determine whether the continuous process vent is Group 1 or Group 2 according to the procedures specified in § 63.1315;

(ii) Conduct initial performance tests to determine percent reduction according to the procedures specified in § 63.1315; and

(iii) Monitor the operating parameters, keep records, and submit reports according to the procedures specified in § 63.1315.

(2) For each continuous process vent subject to § 63.1315 equipped with a carbon adsorber, absorber, or condenser but not equipped with a control device, as appropriate to the control technique:

(i) Determine the flow rate, organic HAP concentration, and TRE index value according to the procedures specified in § 63.1315; and

(ii) Monitor the operating parameters, keep records, and submit reports according to the procedures specified in § 63.1315.

(3) For continuous process vents subject to § 63.1316(b)(1)(i), (b)(1)(ii), (b)(2)(i), (b)(2)(ii), or (c)(1):

(i) Determine whether the emissions from the continuous process vents subject to § 63.1316(b)(1)(i) located in the collection of material recovery sections within the affected source are greater than, equal to, or less than 0.12 kg organic HAP per Mg of product according to the procedures specified in § 63.1318(b);

(ii) Determine the emission rate, ER_{HAP}, for each collection of process sections within the affected source according to the procedures specified in § 63.1318(b); and

(iii) [Reserved]

(iv) Monitor the operating parameters, keep records, and submit reports according to the procedures specified in § 63.1317, § 63.1319, § 63.1320.

(4) For each storage vessel controlled with an internal floating roof, external roof, or a closed vent system with a control device, as appropriate to the control technique:

(i) Perform the monitoring or inspection procedures according to the procedures specified in § 63.1314;

(ii) Perform the reporting and recordkeeping procedures according to the procedures specified in § 63.1314; and

(iii) For closed vent systems with control devices, conduct an initial design evaluation and submit an operating plan according to the procedures specified in § 63.1314.

(5) For wastewater emission points, as appropriate to the control technique:

(i) For wastewater treatment processes, conduct tests according to the procedures specified in §63.1330;

(ii) Conduct inspections and monitoring according to the procedures specified in §63.1330;

(iii) Implement a recordkeeping program according to the procedures specified in §63.1330; and

(iv) Implement a reporting program according to the procedures specified in §63.1330.

(6) For each batch process vent and aggregate batch vent stream equipped with a control device, as appropriate to the control technique:

(i) Determine whether the batch process vent or aggregate batch vent stream is Group 1 or Group 2 according to the procedures in §63.1323;

(ii) Conduct performance tests according to the procedures specified in §63.1325;

(iii) Conduct monitoring according to the procedures specified in §63.1324; and

(iv) Perform the recordkeeping and reporting procedures according to the procedures specified in §§63.1326 and 63.1327.

(7) If an emission point in an emissions average is controlled using a pollution prevention measure or a device or technique for which no monitoring parameters or inspection procedures are required by §§63.1314, 63.1315, 63.1316 through 63.1320, 63.1321, or 63.1330, the owner or operator shall submit the information specified in §63.1335(f) for alternate monitoring parameters or inspection procedures in the Emissions Averaging Plan or operating permit application.

(n) Records of all information required to calculate emission debits and credits shall be retained for 5 years.

(o) Precompliance Reports, Emission Averaging Plans, Notifications of Compliance Status, Periodic Reports, and other reports shall be submitted as required by §63.1335.

[61 FR 48229, Sept. 12, 1996, as amended at 64 FR 11549, Mar. 9, 1999]

§63.1333 Additional requirements for performance testing.

(a) Performance testing shall be conducted in accordance with §63.7(a)(1), (a)(3), (d), (e)(1), (e)(2), (e)(4), (g), and (h), with the exceptions specified in paragraphs (a)(1) through (a)(5) of this section and the additions specified in paragraphs (b) through (d) of this section. Sections 63.1314 through 63.1330 also contain specific testing requirements.

(1) Performance tests shall be conducted according to the provisions of §63.7(e)(1) and (e)(2), except that performance tests shall be conducted at maximum representative operating conditions achievable during one of the time periods described in paragraph (a)(1)(i) of this section, without causing any of the situations described in paragraph (a)(1)(ii) of this section to occur.

(i) The 6-month period that ends 2 months before the Notification of Compliance Status is due, according to §63.1335(e)(5); or the 6-month period that begins 3 months before the performance test and ends 3 months after the performance test.

(ii) Causing damage to equipment; necessitating that the owner or operator make product that does not meet an existing specification for sale to a customer; or necessitating that the owner or operator make product in excess of demand.

(2) The requirements in §63.1335(e)(5) shall apply instead of the references in §63.7(g) to the Notification of Compliance Status requirements in §63.9(h).

(3) Because the site-specific test plans in §63.7(c)(3) are not required, §63.7(h)(4)(ii) is not applicable.

(4) The owner or operator shall notify the Administrator of the intention to conduct a performance test at least 30 days before the performance test is scheduled to allow the Administrator the opportunity to have an observer present during the test. If after 30 days notice for an initially scheduled performance test, there is a delay (due to operational problems, etc.) in conducting the scheduled performance test, the owner or operator of an affected facility shall notify the Administrator as soon as possible of any delay in the original test date, either by providing at least 7 days prior notice of the rescheduled date of the performance test, or by arranging a rescheduled date with the Administrator by mutual agreement.

(5) Performance tests shall be performed no later than 150 days after the

compliance dates specified in this subpart (*i.e.*, in time for the results to be included in the Notification of Compliance Status), rather than according to the time periods in § 63.7(a)(2) of subpart A of this part.

(b) Each owner or operator of an existing affected source producing MBS complying with § 63.1315(b)(2) shall determine compliance with the mass emission per mass product standard by using Equation 49 of this subpart. When determining E_i, when the provisions of § 63.116(c)(4) specify that Method 18, 40 CFR part 60, appendix A, shall be used, Method 18 or Method 25A, 40 CFR part 60, appendix A, may be used for the purposes of this subpart. The use of Method 25A, 40 CFR part 60, appendix A, shall conform with the requirements in paragraphs (b)(1) and (b)(2) of this section.

$$ER_{MBS} = \frac{\sum_{i=1}^{n} E_i}{PP_M} \qquad \text{[Eq. 49]}$$

Where:

ER_{MBS} = Emission rate of organic HAP or TOC from continuous process vents, kg/Mg product.

E_i = Emission rate of organic HAP or TOC from continuous process vent i as calculated using the procedures specified in § 63.116(c)(4), kg/month.

PP_M = Amount of polymer produced in one month as determined by the procedures specified in § 63.1318(b)(1)(ii), Mg/month.

n = Number of continuous process vents.

(1) The organic HAP used as the calibration gas for Method 25A, 40 CFR part 60, appendix A, shall be the single organic HAP representing the largest percent by volume.

(2) The use of Method 25A, 40 CFR part 60, appendix A, is acceptable if the response from the high-level calibration gas is at least 20 times the standard deviation of the response from the zero calibration gas when the instrument is zeroed on the most sensitive scale.

(c) The owner or operator of an affected source, complying with § 63.1322(a)(3) shall determine compliance with the percent reduction requirement using Equation 50 of this subpart.

$$PR = \frac{\left[H_j \sum_{j=1}^{n} \left(E_i - E_o\right) j\right] + \sum_{k=1}^{n} H_k E_{ku} + \sum_{l=1}^{n} AE_{unc}}{\left(H_j \sum_{j=1}^{n} E_i\right) + \sum_{k=1}^{n} H_k E_{ku} + \sum_{l=1}^{n} AE_{unc}} (100) \qquad \text{[Eq. 50]}$$

where:

PR=Percent reduction

H_j=Number of operating hours in a year for control device j.

E_i=Mass rate of TOC or total organic HAP at the inlet of control device j, calculated as specified in § 63.1325(f), kg/hr. This value includes all continuous process vents, batch process vents, and aggregate batch vent streams routed to control device j.

E_o=Mass rate of TOC or total organic HAP at the outlet of control device j, calculated as specified in § 63.1325(f), kg/hr.

H_k=Number of hours of operation during which positive flow is present in uncontrolled continuous process vent or aggregate batch vent stream k, hr/yr.

E_{ku}=Mass rate of TOC or total organic HAP of uncontrolled continuous process vent or aggregate batch vent stream k, calculated as specified in § 63.1325(f)(4), kg/hr.

AE_{unc}=Mass rate of TOC or total organic HAP of uncontrolled batch process vent l, calculated as specified in § 63.1325(f)(4), kg/yr.

n=Number of control devices, uncontrolled continuous process vents and aggregate batch vent streams,

and uncontrolled batch process vents. The value of n is not necessarily the same for these three items.

(d) Data shall be reduced in accordance with the EPA approved methods specified in the applicable subpart or, if other test methods are used, the data and methods shall be validated according to the protocol in Method 301 of appendix A of this part.

(e) Notwithstanding any other provision of this subpart, if an owner or operator of an affected source uses a flare to comply with any of the requirements of this subpart, the owner or operator shall comply with paragraphs (e)(1) through (e)(3) of this section. The owner or operator is not required to conduct a performance test to determine percent emission reduction or outlet organic HAP or TOC concentration. If a compliance demonstration has been conducted previously for a flare, using the techniques specified in paragraphs (e)(1) through (e)(3) of this section, that compliance demonstration may be used to satisfy the requirements of this paragraph if either no deliberate process changes have been made since the compliance demonstration, or the results of the compliance demonstration reliably demonstrate compliance despite process changes.

(1) Conduct a visible emission test using the techniques specified in §63.11(b)(4);

(2) Determine the net heating value of the gas being combusted, using the techniques specified in §63.11(b)(6); and

(3) Determine the exit velocity using the techniques specified in either §63.11(b)(7)(i) (and §63.11(b)(7)(iii), where applicable) or §63.11(b)(8), as appropriate.

[61 FR 48229, Sept. 12, 1996, as amended at 65 FR 38128, June 19, 2000]

§63.1334 Parameter monitoring levels and excursions.

(a) *Establishment of parameter monitoring levels.* The owner or operator of a control or recovery device that has one or more parameter monitoring level requirements specified under this subpart shall establish a maximum or minimum level for each measured parameter. If a performance test is required by this subpart for a control device, the owner or operator shall use the procedures in either paragraph (b) or (c) of this section to establish the parameter monitoring level(s). If a performance test is not required by this subpart for a control device, the owner or operator may use the procedures in paragraph (b), (c) or (d) of this section to establish the parameter monitoring level(s). When using the procedures specified in paragraph (c) or (d) of this section, the owner or operator shall submit the information specified in §63.1335(e)(3)(vii) for review and approval as part of the Precompliance Report.

(1) The owner or operator shall operate control and recovery devices such that the daily average of monitored parameters remains above the minimum established level or below the maximum established level, except as otherwise stated in this subpart.

(2) As specified in §63.1335(e)(5), all established levels, along with their supporting documentation and the definition of an operating day, shall be submitted as part of the Notification of Compliance Status.

(3) Nothing in this section shall be construed to allow a monitoring parameter excursion caused by an activity that violates other applicable provisions of subpart A, F, G, or H of this part.

(b) *Establishment of parameter monitoring levels based exclusively on performance tests.* In cases where a performance test is required by this subpart, or the owner or operator of the affected source elects to do a performance test in accordance with the provisions of this subpart, and an owner or operator elects to establish a parameter monitoring level for a control, recovery, or recapture device based exclusively on parameter values measured during the performance test, the owner or operator of the affected source shall comply with the procedures in paragraphs (b)(1) through (b)(4) of this section, as applicable.

(1) [Reserved]

(2) *Continuous process vents.* During initial compliance testing, the appropriate parameter shall be continuously monitored during the required 1-hour runs. The monitoring level(s) shall then be established as the average of

the maximum (or minimum) point values from the three test runs. The average of the maximum values shall be used when establishing a maximum level, and the average of the minimum values shall be used when establishing a minimum level.

(3) *Batch process vents.* The monitoring level(s) shall be established using the procedures specified in either paragraph (b)(3)(i) or (b)(3)(ii) of this section. The procedures specified in this paragraph (b)(3) may only be used if the batch emission episodes, or portions thereof, selected to be controlled were tested, and monitoring data were collected, during the entire period in which emissions were vented to the control device, as specified in § 63.1325(c)(1)(i). If the owner or operator chose to test only a portion of the batch emission episode, or portion thereof, selected to be controlled, the procedures in paragraph (c) of this section shall be used.

(i) If more than one batch emission episode or more than one portion of a batch emission episode has been selected to be controlled, a single level for the batch cycle shall be calculated as follows:

(A) The average monitored parameter value shall be calculated for each batch emission episode, or portion thereof, in the batch cycle selected to be controlled. The average shall be based on all values measured during the required performance test.

(B) If the level to be established is a maximum operating parameter, the level shall be defined as the minimum of the average parameter values of the batch emission episodes, or portions thereof, in the batch cycle selected to be controlled (*i.e.*, identify the emission episode, or portion thereof, which requires the lowest parameter value in order to assure compliance. The average parameter value that is necessary to assure compliance for that emission episode, or portion thereof, shall be the level for all emission episodes, or portions thereof, in the batch cycle, that are selected to be controlled).

(C) If the level to be established is a minimum operating parameter, the level shall be defined as the maximum of the average parameter values of the batch emission episodes, or portions thereof, in the batch cycle selected to be controlled (*i.e.*, identify the emission episode, or portion thereof, which requires the highest parameter value in order to assure compliance. The average parameter value that is necessary to assure compliance for that emission episode, or portion thereof, shall be the level for all emission episodes, or portions thereof, in the batch cycle, that are selected to be controlled).

(D) Alternatively, an average monitored parameter value shall be calculated for the entire batch cycle based on all values measured during each batch emission episode, or portion thereof, selected to be controlled.

(ii) Instead of establishing a single level for the batch cycle, as described in paragraph (b)(3)(i) of this section, an owner or operator may establish separate levels for each batch emission episode, or portion thereof, selected to be controlled. Each level shall be determined as specified in paragraph (b)(3)(i)(A) of this section.

(iii) The batch cycle shall be defined in the Notification of Compliance Status, as specified in § 63.1335(e)(5). Said definition shall include an identification of each batch emission episode and the information required to determine parameter monitoring compliance for partial batch cycles (i.e., when part of a batch cycle is accomplished during two different operating days).

(4) *Aggregate batch vent streams.* For aggregate batch vent streams, the monitoring level shall be established in accordance with paragraph (b)(2) of this section.

(c) *Establishment of parameter monitoring levels based on performance tests, supplemented by engineering assessments and/or manufacturer's recommendations.* In cases where a performance test is required by this subpart, or the owner or operator elects to do a performance test in accordance with the provisions of this subpart, and an owner or operator elects to establish a parameter monitoring level for a control, recovery, or recapture device under this paragraph (c), the owner or operator shall supplement the parameter values measured during the performance test with engineering assessments and/or manufacturer's recommendations. Performance testing is not required to be

conducted over the entire range of expected parameter values.

(d) *Establishment of parameter monitoring based on engineering assessments and/or manufacturer's recommendations.* In cases where a performance test is not required by this subpart and an owner or operator elects to establish a parameter monitoring level for a control, recovery, or recapture device under this paragraph (d), the determination of the parameter monitoring level shall be based exclusively on engineering assessments and/or manufacturer's recommendations.

(e) [Reserved]

(f) *Parameter monitoring excursion definitions.* (1) With respect to storage vessels (where the applicable monitoring plan specifies continuous monitoring), continuous process vents, aggregate batch vent streams, and process wastewater streams, an excursion means any of the three cases listed in paragraphs (f)(1)(i) through (f)(1)(iii) of this section. For a control or recovery device where multiple parameters are monitored, if one or more of the parameters meets the excursion criteria in paragraphs (f)(1)(i) through (f)(1)(iii) of this section, this is considered a single excursion for the control or recovery device. For each excursion, the owner or operator shall be deemed out of compliance with the provisions of this subpart, except as provided in paragraph (g) of this section.

(i) When the daily average value of one or more monitored parameters is above the maximum level or below the minimum level established for the given parameters.

(ii) When the period of control or recovery device operation, with the exception noted in paragraph (f)(1)(v) of this section, is 4 hours or greater in an operating day, and monitoring data are insufficient, as defined in paragraph (f)(1)(iv) of this section, to constitute a valid hour of data for at least 75 percent of the operating hours.

(iii) When the period of control or recovery device operation, with the exception noted in paragraph (f)(1)(v) of this section, is less than 4 hours in an operating day and more than two of the hours during the period of operation do not constitute a valid hour of data due to insufficient monitoring data, as defined in paragraph (f)(1)(iv) of this section.

(iv) Monitoring data are insufficient to constitute a valid hour of data, as used in paragraphs (f)(1)(ii) and (f)(1)(iii) of this section, if measured values are unavailable for any of the 15-minute periods within the hour. For data compression systems approved under §63.1335(g)(3), monitoring data are insufficient to calculate a valid hour of data if there are less than four data measurements made during the hour.

(v) The periods listed in paragraphs (f)(1)(v)(A) through (f)(1)(v)(E) of this section are not considered to be part of the period of control or recovery device operation, for the purposes of paragraphs (f)(1)(ii) and (f)(1)(iii) of this section.

(A) Monitoring system breakdowns, repairs, calibration checks, and zero (low-level) and high-level adjustments;

(B) Start-ups;

(C) Shutdowns;

(D) Malfunctions; or

(E) Periods of non-operation of the affected source (or portion thereof), resulting in cessation of the emissions to which the monitoring applies.

(2) With respect to batch process vents, an excursion means one of the two cases listed in paragraphs (f)(2)(i) and (f)(2)(ii) of this section. For a control device where multiple parameters are monitored, if one or more of the parameters meets the excursion criteria in either paragraph (f)(2)(i) or (f)(2)(ii) of this section, this is considered a single excursion for the control device. For each excursion, the owner or operator shall be deemed out of compliance with the provisions of this subpart, except as provided in paragraph (g) of this section.

(i) When the batch cycle daily average value of one or more monitored parameters is above the maximum or below the minimum established level for the given parameters.

(ii) When monitoring data are insufficient for an operating day. Monitoring data shall be considered insufficient when measured values are not available for at least 75 percent of the 15-minute periods when batch emission episodes selected to be controlled are

being vented to the control device during the operating day, using the procedures specified in paragraphs (f)(2)(ii)(A) through (f)(2)(ii)(D) of this section.

(A) Determine the total amount of time during the operating day when batch emission episodes selected to be controlled are being vented to the control device.

(B) Subtract the time during the periods listed in paragraphs (f)(2)(ii)(B)(*1*) through (f)(2)(ii)(B)(*4*) of this section from the total amount of time determined in paragraph (f)(2)(ii)(A) of this section, to obtain the operating time used to determine if monitoring data are insufficient.

(*1*) Monitoring system breakdowns, repairs, calibration checks, and zero (low-level) and high-level adjustments;

(*2*) Start-ups;

(*3*) Shutdowns; or

(*4*) Malfunctions.

(C) Determine the total number of 15-minute periods in the operating time used to determine if monitoring data are insufficient, as was determined in accordance with paragraph (f)(2)(ii)(B) of this section.

(D) If measured values are not available for at least 75 percent of the total number of 15-minute periods determined in paragraph (f)(2)(ii)(C) of this section, the monitoring data are insufficient for the operating day.

(3) For storage vessels where the applicable monitoring plan does not specify continuous monitoring, an excursion is defined in paragraph (f)(3)(i) or (ii) of this section, as applicable. For a control or recovery device where multiple parameters are monitored, if one or more of the parameters meets the excursion criteria, this is considered a single excursion for the control or recovery device. For each excursion, the owner or operator shall be deemed out of compliance with the provisions of this subpart, except as provided in paragraph (g) of this section.

(i) If the monitoring plan specifies monitoring a parameter and recording its value at specific intervals (such as every 15 minutes or every hour), either of the cases listed in paragraph (f)(3)(i)(A) or (f)(3)(i)(B) of this section is considered a single excursion for the control device. For each excursion, the owner or operator shall be deemed out of compliance with the provisions of this subpart, except as provided in paragraph (g) of this section.

(A) When the average value of one or more parameters, averaged over the duration of the filling period for the storage vessel, is above the maximum level or below the minimum level established for the given parameters.

(B) When monitoring data are insufficient. Monitoring data shall be considered insufficient when measured values are not available for at least 75 percent of the specific intervals at which parameters are to be monitored and recorded, according to the storage vessel's monitoring plan, during the filling period for the storage vessel.

(ii) If the monitoring plan does not specify monitoring a parameter and recording its value at specific intervals (for example, if the relevant operating requirement is to exchange a disposable carbon canister before expiration of its rated service life), the monitoring plan shall define an excursion in terms of the relevant operating requirement.

(4) With respect to continuous process vents complying with the mass emissions per mass product requirements specified in § 63.1316(b)(1)(i)(A), (b)(1)(ii), (b)(2)(i), (b)(2)(ii), or (c)(1)(i), an excursion has occurred when the mass emission rate calculated as specified in § 63.1318(c) exceeds the appropriate mass emissions per mass product requirement. For each excursion, the owner or operator shall be deemed out of compliance with the provisions of this subpart, except as provided in paragraph (g) of this section.

(5) With respect to continuous process vents complying with the temperature limits for final condensers specified in § 63.1316(b)(1)(i)(B) or (c)(1)(ii), an excursion has occurred when the daily average exit temperature exceeds the appropriate condenser temperature limit. For each excursion, the owner or operator shall be deemed out of compliance with the provisions of this subpart, except as provided in paragraph (g) of this section. The periods listed in paragraphs (f)(5)(i) through (f)(5)(v) of this section are not considered to be part of the period of operation for the

condenser for purposes of determining the daily average exit temperature.

(i) Monitoring system breakdowns, repairs, calibration checks, and zero (low-level) and high-level adjustments;

(ii) Start-ups;

(iii) Shutdowns;

(iv) Malfunctions; or

(v) Periods of non-operation of the affected source (or portion thereof), resulting in cessation of the emissions to which the monitoring applies.

(6) With respect to new affected sources producing SAN using a batch process, an excursion has occurred when the percent reduction calculated using the procedures specified in §63.1333(c) is less than 84 percent. For each excursion, the owner or operator shall be deemed out of compliance with the provisions of this subpart, except as provided in paragraph (g) of this section. The periods listed in paragraphs (f)(6)(i) through (f)(6)(v) of this section are not considered to be part of the period of control or recovery device operation for purposes of determining the percent reduction.

(i) Monitoring system breakdowns, repairs, calibration checks, and zero (low-level) and high-level adjustments;

(ii) Start-ups;

(iii) Shutdowns;

(iv) Malfunctions; or

(v) Periods of non-operation of the affected source (or portion thereof), resulting in cessation of the emissions to which the monitoring applies.

(7) With respect to continuous process vents complying with the mass emissions per mass product requirement specified in §63.1315(b)(2), an excursion has occurred when the mass emission rate calculated as specified in §63.1333(b) exceeds the mass emissions per mass product requirement specified in §63.1315(b)(2). For each excursion, the owner or operator shall be deemed out of compliance with the provisions of this subpart, except as provided in paragraph (g) of this section.

(g) *Excused excursions.* A number of excused excursions shall be allowed for each control or recovery device for each semiannual period. The number of excused excursions for each semiannual period is specified in paragraphs (g)(1) through (g)(6) of this section. This paragraph (g) applies to affected sources required to submit Periodic Reports semiannually or quarterly. The first semiannual period is the 6-month period starting the date the Notification of Compliance Status is due.

(1) For the first semiannual period—six excused excursions.

(2) For the second semiannual period—five excused excursions.

(3) For the third semiannual period—four excused excursions.

(4) For the fourth semiannual period—three excused excursions.

(5) For the fifth semiannual period—two excused excursions.

(6) For the sixth and all subsequent semiannual periods—one excused excursion.

[61 FR 48229, Sept. 12, 1996, as amended at 65 FR 38128, June 19, 2000]

§63.1335 General recordkeeping and reporting provisions.

(a) *Data retention.* Unless otherwise specified in this subpart, the owner or operator of an affected source shall keep copies of all applicable records and reports required by this subpart for at least 5 years, as specified in paragraph (a)(1) of this section, with the exception listed in paragraph (a)(2) of this section.

(1) All applicable records shall be maintained in such a manner that they can be readily accessed. The most recent 6 months of records shall be retained on site or shall be accessible from a central location by computer or other means that provides access within 2 hours after a request. The remaining 4 and one-half years of records may be retained offsite. Records may be maintained in hard copy or computer-readable form including, but not limited to, on paper, microfilm, computer, floppy disk, magnetic tape, or microfiche.

(2) If an owner or operator submits copies of reports to the appropriate EPA Regional Office, the owner or operator is not required to maintain copies of reports. If the EPA Regional Office has waived the requirement of §63.10(a)(4)(ii) for submittal of copies of reports, the owner or operator is not required to maintain copies of those reports.

(b) *Requirements of subpart A of this part.* The owner or operator of an affected source shall comply with the applicable recordkeeping and reporting requirements in subpart A of this part as specified in Table 1 of this subpart. These requirements include, but are not limited to, the requirements specified in paragraphs (b)(1) and (b)(2) of this section.

(1) *Start-up, shutdown, and malfunction plan.* The owner or operator of an affected source shall develop and implement a written start-up, shutdown, and malfunction plan as specified in § 63.6(e)(3). This plan shall describe, in detail, procedures for operating and maintaining the affected source during periods of start-up, shutdown, and malfunction and a program for corrective action for malfunctioning process and air pollution control equipment used to comply with this subpart. Inclusion of Group 2 emission points is not required, unless these points are included in an emissions average. For equipment leaks (subject to § 63.1331), the start-up, shutdown, and malfunction plan requirement is limited to control devices and is optional for other equipment. For equipment leaks, the start-up, shutdown, and malfunction plan may include written procedures that identify conditions that justify a delay of repair. A provision for ceasing to collect, during a start-up, shutdown, or malfunction, monitoring data that would otherwise be required by the provisions of this subpart may be included in the start-up, shutdown, and malfunction plan only if the owner or operator has demonstrated to the Administrator, through the Precompliance Report or a supplement to the Precompliance Report, that the monitoring system would be damaged or destroyed if it were not shut down during the start-up, shutdown, or malfunction. The affected source shall keep the start-up, shutdown, and malfunction plan on-site. Records associated with the plan shall be kept as specified in paragraphs (b)(1)(i)(A) through (b)(1)(i)(C) of this section. Reports related to the plan shall be submitted as specified in paragraph (b)(1)(ii) of this section.

(i) *Records of start-up, shutdown, and malfunction.* The owner or operator shall keep the records specified in paragraphs (b)(1)(i)(A) through (b)(1)(i)(C) of this section.

(A) Records of the occurrence and duration of each start-up, shutdown, and malfunction of operation of process equipment or control devices or recovery devices or continuous monitoring systems used to comply with this subpart during which excess emissions (as defined in § 63.1310(j)(4)) occur.

(B) For each start-up, shutdown, or malfunction during which excess emissions (as defined in § 63.1310(j)(4)) occur, records reflecting whether the procedures specified in the affected source's start-up, shutdown, and malfunction plan were followed, and documentation of actions taken that are not consistent with the plan. For example, if a start-up, shutdown, and malfunction plan includes procedures for routing a control device to a backup control device, records shall be kept of whether the plan was followed. These records may take the form of a ''checklist,'' or other form of recordkeeping that confirms conformance with the start-up shutdown, and malfunction plan for the event.

(C) Records specified in paragraphs (b)(1)(i)(A) through (b)(1)(i)(B) of this section are not required if they pertain solely to Group 2 emission points that are not included in an emissions average.

(ii) *Reports of start-up, shutdown, and malfunction.* For the purposes of this subpart, the semiannual start-up, shutdown, and malfunction reports shall be submitted on the same schedule as the Periodic Reports required under paragraph (e)(6) of this section instead of being submitted on the schedule specified in § 63.10(d)(5)(i). The reports shall include the information specified in § 63.10(d)(5)(i).

(2) *Application for approval of construction or reconstruction.* For new affected sources, each owner or operator shall comply with the provisions in § 63.5 regarding construction and reconstruction, excluding the provisions specified in § 63.5(d)(1)(ii)(H), (d)(1)(iii), (d)(2), and (d)(3)(ii).

(c) [Reserved]

(d) *Recordkeeping and documentation.* Owners or operators required to keep continuous records shall keep records

as specified in paragraphs (d)(1) through (d)(7) of this section, unless an alternative recordkeeping system has been requested and approved as specified in paragraph (g) of this section, and except as provided in paragraph (h) of this section. If a monitoring plan for storage vessels pursuant to §63.1314(a)(9) requires continuous records, the monitoring plan shall specify which provisions, if any, of paragraphs (d)(1) through (d)(7) of this section apply. As described in §63.1314(a)(9), certain storage vessels are not required to keep continuous records as specified in this paragraph. Owners and operators of such storage vessels shall keep records as specified in the monitoring plan required by §63.1314(a)(9). Paragraphs (d)(8) and (d)(9) of this section specify documentation requirements.

(1) The monitoring system shall measure data values at least once every 15 minutes.

(2) The owner or operator shall record either each measured data value or block average values for 1 hour or shorter periods calculated from all measured data values during each period. If values are measured more frequently than once per minute, a single value for each minute may be used to calculate the hourly (or shorter period) block average instead of all measured values. Owners or operators of batch process vents shall record each measured data value.

(3) Daily average (or batch cycle daily average) values of each continuously monitored parameter shall be calculated for each operating day as specified in paragraphs (d)(3)(i) through (d)(3)(ii) of this section, except as specified in paragraphs (d)(6) and (d)(7) of this section.

(i) The daily average value or batch cycle daily average shall be calculated as the average of all parameter values recorded during the operating day, except as specified in paragraph (d)(7) of this section. For batch process vents, as specified in §63.1326(e)(2)(i), only parameter values measured during those batch emission episodes, or portions thereof, in the batch cycle that the owner or operator has chosen to control shall be used to calculate the average. The calculated average shall cover a 24-hour period if operation is continuous, or the number of hours of operation per operating day if operation is not continuous.

(ii) The operating day shall be the period the owner or operator specifies in the operating permit or the Notification of Compliance Status for purposes of determining daily average values or batch cycle daily average values of monitored parameters.

(4)–(5) [Reserved]

(6) *Records required when all recorded values are within the established limits.* If all recorded values for a monitored parameter during an operating day are above the minimum level or below the maximum level established in the Notification of Compliance Status or operating permit, the owner or operator may record that all values were above the minimum level or below the maximum level rather than calculating and recording a daily average (or batch cycle daily average) for that operating day.

(7) Monitoring data recorded during periods identified in paragraphs (d)(7)(i) through (d)(7)(v) of this section shall not be included in any average computed under this subpart. Records shall be kept of the times and durations of all such periods and any other periods during process or control device or recovery device operation when monitors are not operating.

(i) Monitoring system breakdowns, repairs, calibration checks, and zero (low-level) and high-level adjustments;

(ii) Start-ups;

(iii) Shutdowns;

(iv) Malfunctions;

(v) Periods of non-operation of the affected source (or portion thereof), resulting in cessation of the emissions to which the monitoring applies.

(8) For continuous monitoring systems used to comply with this subpart, records documenting the completion of calibration checks, and records documenting the maintenance of continuous monitoring systems that are specified in the manufacturer's instructions or that are specified in other written procedures that provide adequate assurance that the equipment would reasonably be expected to monitor accurately.

(9) The owner or operator of an affected source granted a waiver under § 63.10(f) shall maintain the information, if any, specified by the Administrator as a condition of the waiver of recordkeeping or reporting requirements.

(e) *Reporting and notification.* In addition to the reports and notifications required by subpart A of this part as specified in Table 1 of this subpart, the owner or operator of an affected source shall prepare and submit the reports listed in paragraphs (e)(3) through (e)(8) of this section, as applicable. All reports required by this subpart, and the schedule for their submittal, are listed in Table 9 of this subpart.

(1) Owners and operators shall not be in violation of the reporting requirements of this subpart for failing to submit information required to be included in a specified report if the owner or operator meets the requirements in paragraphs (e)(1)(i) through (e)(1)(iii) of this section. Examples of circumstances where this paragraph may apply include information related to newly-added equipment or emission points, changes in the process, changes in equipment required or utilized for compliance with the requirements of this subpart, or changes in methods or equipment for monitoring, recordkeeping, or reporting.

(i) The information was not known in time for inclusion in the report specified by this subpart;

(ii) The owner or operator has been diligent in obtaining the information; and

(iii) The owner or operator submits a report according to the provisions of paragraphs (e)(1)(iii)(A) through (e)(1)(iii)(C) of this section.

(A) If this subpart expressly provides for supplements to the report in which the information is required, the owner or operator shall submit the information as a supplement to that report. The information shall be submitted no later than 60 days after it is obtained, unless otherwise specified in this subpart.

(B) If this subpart does not expressly provide for supplements, but the owner or operator must submit a request for revision of an operating permit pursuant to part 70 or part 71, due to circumstances to which the information pertains, the owner or operator shall submit the information with the request for revision to the operating permit.

(C) In any case not addressed by paragraph (e)(1)(iii)(A) or (e)(1)(iii)(B) of this paragraph, the owner or operator shall submit the information with the first Periodic Report, as required by this subpart, which has a submission deadline at least 60 days after the information is obtained.

(2) All reports required under this subpart shall be sent to the Administrator at the appropriate address listed in § 63.13. If acceptable to both the Administrator and the owner or operator of an affected source, reports may be submitted on electronic media.

(3) *Precompliance Report.* Owners or operators of affected sources requesting an extension for compliance; requesting approval to use alternative monitoring parameters, alternative continuous monitoring and recordkeeping, or alternative controls; requesting approval to use engineering assessment to estimate emissions from a batch emissions episode, as described in § 63.1323(b)(6)(i)(C); wishing to establish parameter monitoring levels according to the procedures contained in § 63.1334(c) or (d); or requesting approval to incorporate a provision for ceasing to collect monitoring data, during a start-up, shutdown, or malfunction, into the start-up, shutdown, and malfunction plan, when that monitoring equipment would be damaged if it did not cease to collect monitoring data, as permitted under § 63.1310(j)(3), shall submit a Precompliance Report according to the schedule described in paragraph (e)(3)(i) of this section. The Precompliance Report shall contain the information specified in paragraphs (e)(3)(ii) through (e)(3)(viii) of this section, as appropriate.

(i) *Submittal dates.* The Precompliance Report shall be submitted to the Administrator no later than December 19, 2000. If a Precompliance Report was submitted prior to June 19, 2000 and no changes need to be made to that Precompliance Report, the owner or operator shall re-

submit the earlier report or submit notification that the previously submitted report is still valid. Unless the Administrator objects to a request submitted in the Precompliance Report within 45 days after its receipt, the request shall be deemed approved. For new affected sources, the Precompliance Report shall be submitted to the Administrator with the application for approval of construction or reconstruction required in paragraph (b)(2) of this section. Supplements to the Precompliance Report may be submitted as specified in paragraph (e)(3)(ix) of this section.

(ii) A request for an extension for compliance, as specified in §63.1311(e), may be submitted in the Precompliance Report. The request for a compliance extension shall include the data outlined in §63.6(i)(6)(i)(A), (B), and (D), as required in §63.1311(e)(1).

(iii) The alternative monitoring parameter information required in paragraph (f) of this section shall be submitted in the Precompliance Report if, for any emission point, the owner or operator of an affected source seeks to comply through the use of a control technique other than those for which monitoring parameters are specified in this subpart or in subpart G of this part or seeks to comply by monitoring a different parameter than those specified in this subpart or in subpart G of this part.

(iv) If the affected source seeks to comply using alternative continuous monitoring and recordkeeping as specified in paragraph (g) of this section, the owner or operator shall submit a request for approval in the Precompliance Report.

(v) The owner or operator shall report the intent to use alternative controls to comply with the provisions of this subpart in the Precompliance Report. The Administrator may deem alternative controls to be equivalent to the controls required by the standard, under the procedures outlined in §63.6(g).

(vi) If a request for approval to use engineering assessment to estimate emissions from a batch emissions episode, as described in §63.1323(b)(6)(i)(C) is being made, the information required by §63.1323(b)(6)(iii)(B) shall be submitted in the Precompliance Report.

(vii) If an owner or operator establishes parameter monitoring levels according to the procedures contained in §63.1334(c) or (d), the following information shall be submitted in the Precompliance Report:

(A) Identification of which procedures (*i.e.*, §63.1334(c) or (d)) are to be used; and

(B) A description of how the parameter monitoring level is to be established. If the procedures in §63.1334(c) are to be used, a description of how performance test data will be used shall be included.

(viii) If the owner or operator is requesting approval to incorporate a provision for ceasing to collect monitoring data, during a start-up, shutdown, or malfunction, into the start-up, shutdown, and malfunction plan, when that monitoring equipment would be damaged if it did not cease to collect monitoring data, the information specified in paragraphs (e)(3)(viii)(A) and (B) shall be supplied in the Precompliance Report or in a supplement to the Precompliance Report. The Administrator shall evaluate the supporting documentation and shall approve the request only if, in the Administrator's judgment, the specific monitoring equipment would be damaged by the contemporaneous start-up, shutdown, or malfunction.

(A) Documentation supporting a claim that the monitoring equipment would be damaged by the contemporaneous start-up, shutdown, or malfunction; and

(B) A request to incorporate such a provision for ceasing to collect monitoring data during a start-up, shutdown, or malfunction, into the start-up, shutdown, and malfunction plan.

(ix) Supplements to the Precompliance Report may be submitted as specified in paragraphs (e)(3)(ix)(A) or (e)(3)(ix)(B) of this section. Unless the Administrator objects to a request submitted in a supplement to the Precompliance Report within 45 days after its receipt, the request shall be deemed approved.

(A) Supplements to the Precompliance Report may be submitted to clarify or modify information previously submitted.

(B) Supplements to the Precompliance Report may be submitted to request approval to use alternative monitoring parameters, as specified in paragraph (e)(3)(iii) of this section; to use alternative continuous monitoring and recordkeeping, as specified in paragraph (e)(3)(iv) of this section; to use alternative controls, as specified in paragraph (e)(3)(v) of this section; to use engineering assessment to estimate emissions from a batch emissions episode, as specified in paragraph (e)(3)(vi) of this section; to establish parameter monitoring levels according to the procedures contained in § 63.1334(c) or (d), as specified in paragraph (e)(3)(vii) of this section; or to include a provision for ceasing to collect monitoring data during a start-up, shutdown, or malfunction, in the start-up, shutdown, and malfunction plan, when that monitoring equipment would be damaged if it did not cease to collect monitoring data, as specified in paragraph (e)(3)(viii) of this section.

(4) Emissions Averaging Plan. For all existing affected sources using emissions averaging, an Emissions Averaging Plan shall be submitted for approval according to the schedule and procedures described in paragraph (e)(4)(i) of this section. The Emissions Averaging Plan shall contain the information specified in paragraph (e)(4)(ii) of this section, unless the information required in paragraph (e)(4)(ii) of this section is submitted with an operating permit application. An owner or operator of an affected source who submits an operating permit application instead of an Emissions Averaging Plan shall submit the information specified in paragraph (e)(8) of this section. In addition, a supplement to the Emissions Averaging Plan, as required under paragraph (e)(4)(iii) of this section, is to be submitted whenever additional alternative controls or operating scenarios may be used to comply with this subpart. Updates to the Emissions Averaging Plan shall be submitted in accordance with paragraph (e)(4)(iv) of this section.

(i) *Submittal and approval.* The Emissions Averaging Plan shall be submitted no later than September 19, 2000, and it is subject to Administrator approval. If an Emissions Averaging Plan was submitted prior to June 19, 2000 and no changes need to be made to that Emissions Averaging Plan, the owner or operator shall re-submit the earlier plan or submit notification that the previously submitted plan is still valid. The Administrator shall determine within 120 days whether the Emissions Averaging Plan submitted presents sufficient information. The Administrator shall either approve the Emissions Averaging Plan, request changes, or request that the owner or operator submit additional information. Once the Administrator receives sufficient information, the Administrator shall approve, disapprove, or request changes to the plan within 120 days.

(ii) *Information required.* The Emissions Averaging Plan shall contain the information listed in paragraphs (e)(4)(ii)(A) through (e)(4)(ii)(N) of this section for all emission points included in an emissions average.

(A) The required information shall include the identification of all emission points in the planned emissions average and, where applicable, notation of whether each storage vessel, continuous process vent, batch process vent, aggregate batch vent stream, and process wastewater stream is a Group 1 or Group 2 emission point, as defined in § 63.1312 or as designated under § 63.1332 (c)(3) through (c)(5).

(B) The required information shall include the projected emission debits and credits for each emission point and the sum for the emission points involved in the average calculated according to § 63.1332. The projected credits shall be greater than or equal to the projected debits, as required under § 63.1332(e)(3).

(C) The required information shall include the specific control technology or pollution prevention measure that will be used for each emission point included in the average and date of application or expected date of application.

(D) The required information shall include the specific identification of

each emission point affected by a pollution prevention measure. To be considered a pollution prevention measure, the criteria in §63.1332(j)(1) shall be met. If the same pollution prevention measure reduces or eliminates emissions from multiple emission points in the average, the owner or operator shall identify each of these emission points.

(E) The required information shall include a statement that the compliance demonstration, monitoring, inspection, recordkeeping, and reporting provisions in §63.1332 (m), (n), and (o) that are applicable to each emission point in the emissions average will be implemented beginning on or before the date of compliance.

(F) The required information shall include documentation of the data listed in paragraphs (e)(4)(ii)(F)(*1*) through (e)(4)(ii)(F)(*5*) of this section for each storage vessel and continuous process vent subject to §63.1315 included in the average.

(*1*) The required documentation shall include the values of the parameters used to determine whether the emission point is Group 1 or Group 2. Where TRE index value is used for continuous process vent group determination, the estimated or measured values of the parameters used in the TRE equation in §63.115(d) and the resulting TRE index value shall be submitted.

(*2*) The required documentation shall include the estimated values of all parameters needed for input to the emission debit and credit calculations in §63.1332(g) and (h). These parameter values shall be specified in the affected source's Emissions Averaging Plan (or operating permit) as enforceable operating conditions. Changes to these parameters shall be reported as required by paragraph (e)(4)(iv) of this section.

(*3*) The required documentation shall include the estimated percent reduction if a control technology achieving a lower percent reduction than the efficiency of the applicable reference control technology or standard is or will be applied to the emission point.

(*4*) The required documentation shall include the anticipated nominal efficiency if a control technology achieving a greater percent emission reduction than the efficiency of the reference control technology is or will be applied to the emission point. The procedures in §63.1332(i) shall be followed to apply for a nominal efficiency, and the report specified in paragraph (e)(7)(ii) of this section shall be submitted with the Emissions Averaging Plan as specified in paragraph (e)(7)(ii)(A) of this section.

(*5*) The required documentation shall include the monitoring plan specified in §63.122(b), to include the information specified in §63.120(d)(2)(i) and in either §63.120(d)(2)(ii) or (d)(2)(iii) for each storage vessel controlled with a closed-vent system using a control device other than a flare.

(G) The information specified in paragraph (f) of this section shall be included in the Emissions Averaging Plan for:

(*1*) Each continuous process vent subject to §63.1315 controlled by a pollution prevention measure or control technique for which monitoring parameters or inspection procedures are not specified in §63.114; and

(*2*) Each storage vessel controlled by pollution prevention or a control technique other than an internal or external floating roof or a closed vent system with a control device.

(H) The required information shall include documentation of the data listed in paragraphs (e)(4)(ii)(H)(*1*) through (e)(4)(ii)(H)(*5*) of this section for each collection of continuous process vents located in a process section within the affected source subject to §63.1316 (b)(1)(i), (b)(1)(ii), (b)(2)(i), (b)(2)(ii), or (c)(1) included in the average.

(*1*) For continuous process vents subject to §63.1316(b)(1)(i), the required documentation shall include the values of the parameters used to determine whether the emission point is Group 1 or Group 2. Continuous process vents subject to §63.1316 (b)(1)(ii), (b)(2)(i), (b)(2)(ii), or (c)(1) are considered Group 1 emission points for purposes of emissions averaging, as specified in §63.1332(c)(5).

(*2*) The required documentation shall include the estimated values of all parameters needed for input to the emission debit and credit calculations in §63.1332(g) and (h). These parameter values shall be specified in the affected source's Emissions Averaging Plan (or

operating permit) as enforceable operating conditions. Changes to these parameters shall be reported as required by paragraph (e)(4)(iv) of this section.

(*3*) For process sections generating debits or credits by comparing actual emissions expressed as kg HAP emissions per Mg of product to the applicable standard, the required documentation shall include the actual emission level expressed as kg HAP emissions per Mg of product.

(*4*) For process sections using combustion control devices, the required documentation shall include the estimated percent reduction if a control technology achieving a lower percent reduction than the efficiency of the applicable reference control technology or standard is or will be applied to the emission point.

(*5*) For process sections using combustion control devices, the required documentation shall include the anticipated nominal efficiency if a control technology achieving a greater percent emission reduction than the efficiency of the reference control technology is or will be applied to the emission point. The procedures in § 63.1332(i) shall be followed to apply for a nominal efficiency.

(I) For each pollution prevention measure or control device used to reduce air emissions of organic HAP from each collection of continuous process vents located in a process section within the affected source subject to § 63.1316 (b)(1)(i), (b)(1)(ii), (b)(2)(i), (b)(2)(ii), or (c)(1) and for which no monitoring parameters or inspection procedures are specified in § 63.114, the information specified in paragraph (f) of this section, Alternative Monitoring Parameters, shall be included in the Emissions Averaging Plan.

(J) The required information shall include documentation of the data listed in paragraphs (e)(4)(ii)(J)(*1*) through (e)(4)(ii)(J)(*3*) of this section for each batch process vent and aggregate batch vent stream included in the average.

(*1*) The required documentation shall include the values of the parameters used to determine whether the emission point is Group 1 or Group 2.

(*2*) The required documentation shall include the estimated values of all parameters needed for input to the emission debit and credit calculations in § 63.1332(g) and (h). These parameter values shall be specified in the affected source's Emissions Averaging Plan (or operating permit) as enforceable operating conditions. Changes to these parameters shall be reported as required by paragraph (e)(4)(iv) of this section.

(*3*) For batch process vents, the required documentation shall include the estimated percent reduction for the batch cycle. For aggregate batch vent streams, the required documentation shall include the estimated percent reduction achieved on a continuous basis.

(K) For each pollution prevention measure or control device used to reduce air emissions of organic HAP from batch process vents or aggregate batch vent streams and for which no monitoring parameters or inspection procedures are specified in § 63.1324, the information specified in paragraph (f) of this section, Alternative Monitoring Parameters, shall be included in the Emissions Averaging Plan.

(L) The required information shall include documentation of the data listed in paragraphs (e)(4)(ii)(L)(*1*) through (e)(4)(ii)(L)(*4*) of this section for each process wastewater stream included in the average.

(*1*) The required documentation shall include the data used to determine whether the wastewater stream is a Group 1 or Group 2 wastewater stream.

(*2*) The required documentation shall include the estimated values of all parameters needed for input to the wastewater emission credit and debit calculations in § 63.1332(g) and (h). These parameter values shall be specified in the affected source's Emissions Averaging Plan (or operating permit) as enforceable operating conditions. Changes to these parameters shall be reported as required by paragraph (e)(4)(iv) of this section.

(*3*) The required documentation shall include the estimated percent reduction if:

(*i*) A control technology that achieves an emission reduction less than or equal to the emission reduction that would otherwise have been achieved by a steam stripper designed to the specifications found in § 63.138(g) is or will be applied to the wastewater stream;

(*ii*) A control technology achieving less than or equal to 95 percent emission reduction is or will be applied to the vapor stream(s) vented and collected from the treatment processes; or

(*iii*) A pollution prevention measure is or will be applied.

(*4*) The required documentation shall include the anticipated nominal efficiency if the owner or operator plans to apply for a nominal efficiency under §63.1332(i). A nominal efficiency shall be applied for if:

(*i*) A control technology that achieves an emission reduction greater than the emission reduction that would have been achieved by a steam stripper designed to the specifications found in §63.138(g), is or will be applied to the wastewater stream; or

(*ii*) A control technology achieving greater than 95 percent emission reduction is or will be applied to the vapor stream(s) vented and collected from the treatment processes.

(M) For each pollution prevention measure, treatment process, or control device used to reduce air emissions of organic HAP from wastewater and for which no monitoring parameters or inspection procedures are specified in §63.143, the information specified in paragraph (f) of this section, Alternative Monitoring Parameters, shall be included in the Emissions Averaging Plan.

(N) The required information shall include documentation of the data required by §63.1332(k). The documentation shall demonstrate that the emissions from the emission points proposed to be included in the average will not result in greater hazard or, at the option of the Administrator, greater risk to human health or the environment than if the emission points were not included in an emissions average.

(iii) *Supplement to Emissions Averaging Plan*. The owner or operator required to prepare an Emissions Averaging Plan under paragraph (e)(4) of this section shall also prepare a supplement to the Emissions Averaging Plan for any additional alternative controls or operating scenarios that may be used to achieve compliance.

(iv) *Updates to Emissions Averaging Plan*. The owner or operator of an affected source required to submit an Emissions Averaging Plan under paragraph (e)(4) of this section shall also submit written updates of the Emissions Averaging Plan to the Administrator for approval under the circumstances described in paragraphs (e)(4)(iv)(A) through (e)(4)(iv)(C) of this section unless the relevant information has been included and submitted in an operating permit application or amendment.

(A) The owner or operator who plans to make a change listed in either paragraph (e)(4)(iv)(A)(*1*) or (e)(4)(iv)(A)(*2*) of this section shall submit an Emissions Averaging Plan update at least 120 days prior to making the change.

(*1*) An Emissions Averaging Plan update shall be submitted whenever an owner or operator elects to achieve compliance with the emissions averaging provisions in §63.1332 by using a control technique other than that specified in the Emissions Averaging Plan or plans to monitor a different parameter or operate a control device in a manner other than that specified in the Emissions Averaging Plan.

(*2*) An Emissions Averaging Plan update shall be submitted whenever an emission point or a TPPU is added to an existing affected source and is planned to be included in an emissions average, or whenever an emission point not included in the emissions average described in the Emissions Averaging Plan is to be added to an emissions average. The information in paragraph (e)(4) of this section shall be updated to include the additional emission point.

(B) The owner or operator who has made a change as defined in paragraph (e)(4)(iv)(B)(*1*) or (e)(4)(iv)(B)(*2*) of this section shall submit an Emissions Averaging Plan update within 90 days after the information regarding the change is known to the affected source. The update may be submitted in the next quarterly periodic report if the change is made after the date the Notification of Compliance Status is due.

(*1*) An Emissions Averaging Plan update shall be submitted whenever a process change is made such that the group status of any emission point in an emissions average changes.

(*2*) An Emissions Averaging Plan update shall be submitted whenever a value of a parameter in the emission

credit or debit equations in § 63.1332 (g) or (h) changes such that it is below the minimum or above the maximum established level specified in the Emissions Averaging Plan and causes a decrease in the projected credits or an increase in the projected debits.

(C) The Administrator shall approve or request changes to the Emissions Averaging Plan update within 120 days of receipt of sufficient information regarding the change for emission points included in emissions averages.

(5) *Notification of Compliance Status.* For existing and new affected sources, a Notification of Compliance Status shall be submitted. For equipment leaks subject to § 63.1331, the owner or operator shall submit the information required in § 63.182(c) in the Notification of Compliance Status within 150 days after the first applicable compliance date for equipment leaks in the affected source, and an update shall be provided in the first Periodic Report that is due at least 150 days after each subsequent applicable compliance date for equipment leaks in the affected source. For all other emission points, including heat exchange systems, the Notification of Compliance Status shall contain the information listed in paragraphs (e)(5)(i) through (e)(5)(xi) of this section, as applicable, and shall be submitted no later than 150 days after the compliance dates specified in this subpart.

(i) The results of any emission point group determinations, process section applicability determinations, performance tests, inspections, any other information used to demonstrate compliance, values of monitored parameters established during performance tests, and any other information required to be included in the Notification of Compliance Status under §§ 63.1311(m), 63.122, and 63.1314 for storage vessels, § 63.117 for continuous process vents, § 63.146 for process wastewater, §§ 63.1316 through 63.1320 for continuous process vents subject to § 63.1316, § 63.1327 for batch process vents, § 63.1329 for process contact cooling towers, and § 63.1332 for emission points included in an emissions average. In addition, the owner or operator of an affected source shall comply with paragraphs (e)(5)(i)(A) and (e)(5)(i)(B) of this section.

(A) For performance tests, group determinations, and process section applicability determinations that are based on measurements, the Notification of Compliance Status shall include one complete test report, as described in paragraph (e)(5)(i)(B) of this section, for each test method used for a particular kind of emission point. For additional tests performed for the same kind of emission point using the same method, the results and any other information, from the test report, that is requested on a case-by-case basis by the Administrator shall be submitted, but a complete test report is not required.

(B) A complete test report shall include a brief process description, sampling site description, description of sampling and analysis procedures and any modifications to standard procedures, quality assurance procedures, record of operating conditions during the test, record of preparation of standards, record of calibrations, raw data sheets for field sampling, raw data sheets for field and laboratory analyses, documentation of calculations, and any other information required by the test method.

(ii) For each monitored parameter for which a maximum or minimum level is required to be established under § 63.114(e) for continuous process vents, § 63.1324 for batch process vents and aggregate batch vent streams, § 63.143(f) for process wastewater, § 63.1332(m) for emission points in emissions averages, paragraph (e)(8) of this section, or paragraph (f) of this section, the Notification of Compliance Status shall contain the information specified in paragraphs (e)(5)(ii)(A) through (e)(5)(ii)(D) of this section, unless this information has been established and provided in the operating permit application. Further, as described in § 63.1314(a)(9), for those storage vessels for which the monitoring plan required by § 63.1314(a)(9) specifies compliance with the provisions of § 63.1334, the owner or operator shall provide the information specified in paragraphs (e)(5)(ii)(A) through (e)(5)(ii)(D) of this section for each monitored parameter, unless this information has been established and provided in the operating permit application. For those storage

vessels for which the monitoring plan required by §63.1314(a)(9) does not require compliance with the provisions of §63.1334, the owner or operator shall provide the information specified in §63.120(d)(3) as part of the Notification of Compliance Status, unless this information has been established and provided in the operating permit application.

(A) The required information shall include the specific maximum or minimum level of the monitored parameter(s) for each emission point.

(B) The required information shall include the rationale for the specific maximum or minimum level for each parameter for each emission point, including any data and calculations used to develop the level and a description of why the level indicates proper operation of the control device.

(C) The required information shall include a definition of the affected source's operating day, as specified in paragraph (d)(3)(ii) of this section, for purposes of determining daily average values or batch cycle daily average values of monitored parameters.

(D) For batch process vents, the required information shall include a definition of each batch cycle that requires the control of one or more batch emission episodes during the cycle, as specified in §63.1325(c)(2) and §63.1334(b)(3)(iii).

(iii) For emission points included in an emissions average, the Notification of Compliance Status shall contain the values of all parameters needed for input to the emission credit and debit equations in §63.1332 (g) and (h), calculated or measured according to the procedures in §63.1332 (g) and (h), and the resulting calculation of credits and debits for the first quarter of the year. The first quarter begins on the compliance date specified.

(iv) The determination of applicability for flexible operation units as specified in §63.1310(f).

(v) The parameter monitoring levels for flexible operation units, and the basis on which these levels were selected, or a demonstration that these levels are appropriate at all times, as specified in §63.1310(f)(7).

(vi) The results for each predominant use determination made under §63.1310(g), for storage vessels assigned to an affected source subject to this subpart.

(vii) The results for each predominant use determination made under §63.1310(h), for recovery operations equipment assigned to an affected source subject to this subpart.

(viii) For owners or operators of Group 2 batch process vents establishing a batch mass input limitation as specified in §63.1325(g), the affected source's operating year for purposes of determining compliance with the batch mass input limitation.

(ix) If any emission point is subject to this subpart and to other standards as specified in §63.1311, and if the provisions of §63.1311 allow the owner or operator to choose which testing, monitoring, reporting, and recordkeeping provisions will be followed, then the Notification of Compliance Status shall indicate which rule's requirements will be followed for testing, monitoring, reporting, and recordkeeping.

(x) An owner or operator who transfers a Group 1 wastewater stream or residual removed from a Group 1 wastewater stream for treatment pursuant to §63.132(g) shall include in the Notification of Compliance Status the name and location of the transferee and a description of the Group 1 wastewater stream or residual sent to the treatment facility.

(xi) An owner or operator complying with paragraph (h)(1) of this section shall notify the Administrator of the election to comply with paragraph (h)(1) of this section as part of the Notification of Compliance Status or as part of the appropriate Periodic Report as specified in paragraph (e)(6)(ix) of this section.

(6) *Periodic Reports*. For existing and new affected sources, the owner or operator shall submit Periodic Reports as specified in paragraphs (e)(6)(i) through (e)(6)(xi) of this section. In addition, for equipment leaks subject to §63.1331, the owner or operator shall submit the information specified in §63.182(d) under the conditions listed in §63.182(d), and for heat exchange systems subject to §63.1328, the owner or operator shall submit the information specified in §63.104(f)(2) as part of the

Periodic Report required by this paragraph (e)(6). Section 63.1334 shall govern the use of monitoring data to determine compliance for Group 1 emissions points and for Group 1 and Group 2 emission points included in emissions averages with the following exception: As discussed in § 63.1314(a)(9), for storage vessels to which the provisions of § 63.1334 do not apply, as specified in the monitoring plan required by § 63.120(d)(2), the owner or operator is required to comply with the requirements set out in the monitoring plan, and monitoring records may be used to determine compliance.

(i) Except as specified in paragraphs (e)(6)(xi) and (e)(6)(xii) of this section, a report containing the information in paragraph (e)(6)(ii) of this section or containing the information in paragraphs (e)(6)(iii) through (e)(6)(x) of this section, as appropriate, shall be submitted semiannually no later than 60 days after the end of each 6-month period. The first report shall be submitted no later than 240 days after the date the Notification of Compliance Status is due and shall cover the 6-month period beginning on the date the Notification of Compliance Status is due.

(ii) If none of the compliance exceptions specified in paragraphs (e)(6)(iii) through (e)(6)(ix) of this section occurred during the 6-month period, the Periodic Report required by paragraph (e)(6)(i) of this section shall be a statement that there were no compliance exceptions as described in this paragraph for the 6-month period covered by that report and no activities specified in paragraphs (e)(6)(iii) through (e)(6)(ix) of this section occurred during the 6-month period covered by that report.

(iii) For an owner or operator of an affected source complying with the provisions of §§ 63.1314 through 63.1330 for any emission point or process section, Periodic Reports shall include:

(A) All information specified in § 63.122 for storage vessels; §§ 63.117 and 63.118 and § 63.1320 for continuous process vents, as applicable; § 63.1327 for batch process vents and aggregate batch vent streams; § 63.104 for heat exchange systems; and § 63.146 for process wastewater;

(B) The daily average values or batch cycle daily average values of monitored parameters for both excused excursions, as defined in § 63.1334(g), and unexcused excursions, as defined in § 63.1334(f). For excursions caused by lack of monitoring data, the start-time and duration of periods when monitoring data were not collected shall be specified.

(C) [Reserved]

(D) The information in paragraphs (e)(6)(iii)(D)(*1*) through (e)(6)(iii)(D)(*4*) of this section, as applicable:

(*1*) Any supplements to the Emissions Averaging Plan, as required in paragraph (e)(4)(iii) of this section;

(*2*) Notification if a process change is made such that the group status of any emission point changes from Group 2 to Group 1. The owner or operator is not required to submit a notification of a process change if that process change caused the group status of an emission point to change from Group 1 to Group 2. However, until the owner or operator notifies the Administrator that the group status of an emission point has changed from Group 1 to Group 2, the owner or operator is required to continue to comply with the Group 1 requirements for that emission point. This notification may be submitted at any time.

(*3*) Notification if one or more emission point(s) (other than equipment leaks) or one or more TPPU is added to an affected source. The owner or operator shall submit the information contained in paragraphs (e)(6)(iii)(D)(*3*)(*i*) through (e)(6)(iii)(D)(*3*)(*ii*) of this section:

(*i*) A description of the addition to the affected source; and

(*ii*) Notification of the group status of the additional emission point or all emission points in the TPPU.

(*4*) For process wastewater streams sent for treatment pursuant to § 63.132(g), reports of changes in the identity of the treatment facility or transferee.

(E) The information in paragraph (b)(1)(ii) of this section for reports of start-up, shutdown, and malfunction.

(iv) For each batch process vent with a batch mass input limitation, every second Periodic Report shall include the mass of HAP or material input to

the batch unit operation during the 12-month period covered by the preceding and current Periodic Reports, and a statement of whether the batch process vent was in or out of compliance with the batch mass input limitation.

(v) If any performance tests are reported in a Periodic Report, the following information shall be included:

(A) One complete test report shall be submitted for each test method used for a particular kind of emission point tested. A complete test report shall contain the information specified in paragraph (e)(5)(i)(B) of this section.

(B) For additional tests performed for the same kind of emission point using the same method, results and any other information, pertaining to the performance test, that is requested on a case-by-case basis by the Administrator shall be submitted, but a complete test report is not required.

(vi) Notification of a change in the primary product of a TPPU, in accordance with the provisions in §63.1310(f). This includes a change in primary product from one thermoplastic product to either another thermoplastic product or to a non-thermoplastic product.

(vii) The results for each change made to a predominant use determination made under §63.1310(g) for a storage vessel that is assigned to an affected source subject to this subpart after the change.

(viii) The Periodic Report shall include the results for each change made to a predominant use determination made under §63.1310(h) for recovery operations equipment assigned to an affected source subject to this subpart after the change.

(ix) An owner or operator complying with paragraph (h)(1) of this section shall notify the Administrator of the election to comply with paragraph (h)(1) of this section as part of the Periodic Report or as part of the Notification of Compliance Status as specified in paragraph (e)(5)(xi) of this section.

(x) An owner or operator electing not to retain daily average or batch cycle daily average values under paragraph (h)(2) of this section shall notify the Administrator as specified in paragraph (h)(2)(i) of this section.

(xi) The owner or operator of an affected source shall submit quarterly reports for all emission points included in an emissions average as specified in paragraphs (e)(6)(xi)(A) through (e)(6)(xi)(C) of this section.

(A) The quarterly reports shall be submitted no later than 60 days after the end of each quarter. The first report shall be submitted with the Notification of Compliance Status no later than 150 days after the compliance date.

(B) The quarterly reports shall include the information specified in paragraphs (e)(6)(xi)(B)(*1*) through (e)(6)(xi)(B)(*7*) of this section for all emission points included in an emissions average.

(*1*) The credits and debits calculated each month during the quarter;

(*2*) A demonstration that debits calculated for the quarter are not more than 1.30 times the credits calculated for the quarter, as required under §63.1332(e)(4);

(*3*) The values of any inputs to the debit and credit equations in §63.1332(g) and (h) that change from month to month during the quarter or that have changed since the previous quarter;

(*4*) Results of any performance tests conducted during the reporting period including one complete report for each test method used for a particular kind of emission point as described in paragraph (e)(6)(v) of this section;

(*5*) Reports of daily average (or batch cycle daily average) values of monitored parameters for excursions as defined in §63.1334(f);

(*6*) For excursions caused by lack of monitoring data, the duration of periods when monitoring data were not collected shall be specified; and

(*7*) Any other information the affected source is required to report under the operating permit or Emissions Averaging Plan for the affected source.

(C) Every fourth quarterly report shall include the following:

(*1*) A demonstration that annual credits are greater than or equal to annual debits as required by §63.1332(e)(3); and

(*2*) A certification of compliance with all the emissions averaging provisions in §63.1332.

(xii) The owner or operator of an affected source shall submit quarterly reports for particular emission points and process sections not included in an emissions average as specified in paragraphs (e)(6)(xii)(A) through (e)(6)(xii)(D) of this section.

(A) The owner or operator of an affected source shall submit quarterly reports for a period of 1 year for an emission point or process section that is not included in an emissions average if:

(*1*) A control or recovery device for a particular emission point or process section has more excursions, as defined in § 63.1334(f), than the number of excused excursions allowed under § 63.1334(g) for a semiannual reporting period; or

(*2*) The Administrator requests that the owner or operator submit quarterly reports for the emission point or process section.

(B) The quarterly reports shall include all information specified in paragraphs (e)(6)(iii) through (e)(6)(ix) of this section applicable to the emission point or process section for which quarterly reporting is required under paragraph (e)(6)(xii)(A) of this section. Information applicable to other emission points within the affected source shall be submitted in the semiannual reports required under paragraph (e)(6)(i) of this section.

(C) Quarterly reports shall be submitted no later than 60 days after the end of each quarter.

(D) After quarterly reports have been submitted for an emission point for 1 year without more excursions occurring (during that year) than the number of excused excursions allowed under § 63.1334(g), the owner or operator may return to semiannual reporting for the emission point or process section.

(7) *Other reports*. Other reports shall be submitted as specified in paragraphs (e)(7)(i) through (e)(7)(iv) of this section.

(i) For storage vessels, the notifications of inspections required by § 63.1314 shall be submitted as specified in § 63.122 (h)(1) and (h)(2).

(ii) For owners or operators of affected sources required to request approval for a nominal control efficiency for use in calculating credits for an emissions average, the information specified in § 63.1332(i) shall be submitted as specified in paragraph (e)(7)(ii)(A) or (B) of this section, as appropriate.

(A) If use of a nominal control efficiency is part of the initial Emissions Averaging Plan described in paragraph (e)(4)(ii) of this section, the information shall be submitted with the Emissions Averaging Plan.

(B) If an owner or operator elects to use a nominal control efficiency after submittal of the initial Emissions Averaging Plan as described in paragraph (e)(4)(ii) of this section, the information shall be submitted at the discretion of the owner or operator.

(iii) When the conditions of §§ 63.1310(f)(3)(iii), 63.1310(f)(9), or 63.1310(f)(10)(iii) are met, reports of changes to the primary product for a TPPU or process unit as required by §§ 63.1310(f)(3)(iii), 63.1310(f)(9), or 63.1310(f)(10)(iii)(C), respectively, shall be submitted.

(iv) Owners or operators of TPPU or emission points (other than equipment leak components subject to § 63.1331) that are subject to § 63.1310(i)(1) or (i)(2) shall submit a report as specified in paragraphs (e)(7)(iv)(A) and (B) of this section.

(A) Reports shall include:

(*1*) A description of the process change or addition, as appropriate;

(*2*) The planned start-up date and the appropriate compliance date, according to § 63.1310(i)(1) or (2); and

(*3*) Identification of the group status of emission points (except equipment leak components subject to § 63.1331) specified in paragraphs (e)(7)(iv)(A)(*3*)(*i*) through (e)(7)(iv)(A)(*3*)(*iii*) of this section, as applicable.

(*i*) All the emission points in the added TPPU as described in § 63.1310(i)(1).

(*ii*) All the emission points in an affected source designated as a new affected source under § 63.1310(i)(2)(i).

(*iii*) All the added or created emission points as described in § 63.1310(i)(2)(ii) or (i)(2)(iii).

(*4*) If the owner or operator wishes to request approval to use alternative monitoring parameters, alternative

continuous monitoring or recordkeeping, alternative controls, engineering assessment to estimate emissions from a batch emissions episode, or wishes to establish parameter monitoring levels according to the procedures contained in §63.1334(c) or (d), a Precompliance Report shall be submitted in accordance with paragraph (e)(7)(iv)(B) of this section.

(B) Reports shall be submitted as specified in paragraphs (e)(7)(iv)(B)(*1*) through (e)(7)(iv)(B)(*3*) of this section, as appropriate.

(*1*) Owners or operators of an added TPPU subject to §63.1310(i)(1) shall submit a report no later than 180 days prior to the compliance date for the TPPU.

(*2*) Owners or operators of an affected source designated as a new affected source under §63.1310(i)(2)(i) shall submit a report no later than 180 days prior to the compliance date for the affected source.

(*3*) Owners or operators of any emission point (other than equipment leak components subject to §63.1331) subject to §63.1310(i)(2)(ii) or (i)(2)(iii) shall submit a report no later than 180 days prior to the compliance date for those emission points.

(8) *Operating permit application*. An owner or operator who submits an operating permit application instead of an Emissions Averaging Plan or a Precompliance Report shall include the following information with the operating permit application:

(i) The information specified in paragraph (e)(4) of this section for points included in an emissions average; and

(ii) The information specified in paragraph (e)(3) of this section, Precompliance Report, as applicable.

(f) *Alternative monitoring parameters*. The owner or operator who has been directed by any section of this subpart or any section of another subpart referenced by this subpart, that expressly referenced this paragraph (f) to set unique monitoring parameters, or who requests approval to monitor a different parameter than those specified in §63.1314 for storage vessels, §63.1315 or §63.1317, as appropriate, for continuous process vents, §63.1321 for batch process vents and aggregate batch vent streams, or §63.1330 for process wastewater shall submit the information specified in paragraphs (f)(1) through (f)(3) of this section in the Precompliance Report, as required by paragraph (e)(3) of this section. The owner or operator shall retain for a period of 5 years each record required by paragraphs (f)(1) through (f)(3) of this section.

(1) The required information shall include a description of the parameter(s) to be monitored to ensure the recovery device, control device, or pollution prevention measure is operated in conformance with its design and achieves the specified emission limit, percent reduction, or nominal efficiency, and an explanation of the criteria used to select the parameter(s).

(2) The required information shall include a description of the methods and procedures that will be used to demonstrate that the parameter indicates proper operation, the schedule for this demonstration, and a statement that the owner or operator will establish a level for the monitored parameter as part of the Notification of Compliance Status report required in paragraph (e)(5) of this section, unless this information has already been included in the operating permit application.

(3) The required information shall include a description of the proposed monitoring, recordkeeping, and reporting system, to include the frequency and content of monitoring, recordkeeping, and reporting. Further, the rationale for the proposed monitoring, recordkeeping, and reporting system shall be included if either condition in paragraph (f)(3)(i) or (f)(3)(ii) of this section is met:

(i) If monitoring and recordkeeping is not continuous; or

(ii) If reports of daily average values will not be included in Periodic Reports when the monitored parameter value is above the maximum level or below the minimum level as established in the operating permit or the Notification of Compliance Status.

(g) *Alternative continuous monitoring and recordkeeping*. An owner or operator choosing not to implement the provisions listed in §63.1315 or §63.1317, as appropriate, for continuous process vents, §63.1321 for batch process vents and aggregate batch vent streams, or

§ 63.1330 for process wastewater, may instead request approval to use alternative continuous monitoring and recordkeeping provisions according to the procedures specified in paragraphs (g)(1) through (g)(4) of this section. Requests shall be submitted in the Precompliance Report as specified in paragraph (e)(3)(iv) of this section, if not already included in the operating permit application, and shall contain the information specified in paragraphs (g)(2)(ii) and (g)(3)(ii) of this section, as applicable.

(1) The provisions in § 63.8(f)(5)(i) shall govern the review and approval of requests.

(2) An owner or operator of an affected source that does not have an automated monitoring and recording system capable of measuring parameter values at least once every 15 minutes and that does not generate continuous records may request approval to use a nonautomated system with less frequent monitoring, in accordance with paragraphs (g)(2)(i) and (g)(2)(ii) of this section.

(i) The requested system shall include manual reading and recording of the value of the relevant operating parameter no less frequently than once per hour. Daily average (or batch cycle daily average) values shall be calculated from these hourly values and recorded.

(ii) The request shall contain:

(A) A description of the planned monitoring and recordkeeping system;

(B) Documentation that the affected source does not have an automated monitoring and recording system;

(C) Justification for requesting an alternative monitoring and recordkeeping system; and

(D) Demonstration to the Administrator's satisfaction that the proposed monitoring frequency is sufficient to represent control or recovery device operating conditions, considering typical variability of the specific process and control or recovery device operating parameter being monitored.

(3) An owner or operator may request approval to use an automated data compression recording system that does not record monitored operating parameter values at a set frequency, but records all values that meet set criteria for variation from previously recorded values, in accordance with paragraphs (g)(3)(i) and (g)(3)(ii) of this section.

(i) The requested system shall be designed to:

(A) Measure the operating parameter value at least once during every 15 minute period;

(B) Except for the monitoring of batch process vents, calculate hourly average values each hour during periods of operation;

(C) Record the date and time when monitors are turned off or on;

(D) Recognize unchanging data that may indicate the monitor is not functioning properly, alert the operator, and record the incident;

(E) Calculate daily average (or batch cycle daily average) values of the monitored operating parameter based on all measured data; and

(F) If the daily average is not an excursion, as defined in § 63.1334(f), the data for that operating day may be converted to hourly average values and the four or more individual records for each hour in the operating day may be discarded.

(ii) The request shall contain:

(A) A description of the monitoring system and data compression recording system, including the criteria used to determine which monitored values are recorded and retained;

(B) The method for calculating daily averages and batch cycle daily averages; and

(C) A demonstration that the system meets all criteria in paragraph (g)(3)(i) of this section.

(4) An owner or operator may request approval to use other alternative monitoring systems according to the procedures specified in § 63.8(f)(4).

(h) *Reduced recordkeeping program.* For any parameter with respect to any item of equipment, the owner or operator may implement the recordkeeping requirements specified in paragraph (h)(1) or (h)(2) of this section as alternatives to the continuous operating parameter monitoring and recordkeeping provisions that would otherwise apply under this subpart. The owner or operator shall retain for a period of 5 years each record required by paragraph (h)(1) or (h)(2) of this section, except as

otherwise provided in paragraph (h)(1)(vi)(D) of this section.

(1) The owner or operator may retain only the daily average (or batch cycle daily average) value, and is not required to retain more frequent monitored operating parameter values, for a monitored parameter with respect to an item of equipment, if the requirements of paragraphs (h)(1)(i) through (h)(1)(vi) of this section are met. An owner or operator electing to comply with the requirements of paragraph (h)(1) of this section shall notify the Administrator in the Notification of Compliance Status as specified in paragraph (e)(5)(xi) of this section or, if the Notification of Compliance Status has already been submitted, in the Periodic Report immediately preceding implementation of the requirements of paragraph (h)(1) of this section as specified in paragraph (e)(6)(ix) of this section.

(i) The monitoring system is capable of detecting unrealistic or impossible data during periods of operation other than start-ups, shutdowns, or malfunctions (e.g., a temperature reading of −200 °C on a boiler), and will alert the operator by alarm or other means. The owner or operator shall record the occurrence. All instances of the alarm or other alert in an operating day constitute a single occurrence.

(ii) The monitoring system generates, updated at least hourly throughout each operating day, a running average of the monitoring values that have been obtained during that operating day, and the capability to observe this running average is readily available to the Administrator on-site during the operating day. The owner or operator shall record the occurrence of any period meeting the criteria in paragraphs (h)(1)(ii)(A) through (h)(1)(ii)(C) of this section. All instances in an operating day constitute a single occurrence.

(A) The running average is above the maximum or below the minimum established limits;

(B) The running average is based on at least six 1-hour average values; and

(C) The running average reflects a period of operation other than a start-up, shutdown, or malfunction.

(iii) The monitoring system is capable of detecting unchanging data during periods of operation other than start-ups, shutdowns, or malfunctions, except in circumstances where the presence of unchanging data is the expected operating condition based on past experience (e.g., pH in some scrubbers), and will alert the operator by alarm or other means. The owner or operator shall record the occurrence. All instances of the alarm or other alert in an operating day constitute a single occurrence.

(iv) The monitoring system will alert the owner or operator by an alarm or other means, if the running average parameter value calculated under paragraph (h)(1)(ii) of this section reaches a set point that is appropriately related to the established limit for the parameter that is being monitored.

(v) The owner or operator shall verify the proper functioning of the monitoring system, including its ability to comply with the requirements of paragraph (h)(1) of this section, at the times specified in paragraphs (h)(1)(v)(A) through (h)(1)(v)(C). The owner or operator shall document that the required verifications occurred.

(A) Upon initial installation.

(B) Annually after initial installation.

(C) After any change to the programming or equipment constituting the monitoring system, which might reasonably be expected to alter the monitoring system's ability to comply with the requirements of this section.

(vi) The owner or operator shall retain the records identified in paragraphs (h)(1)(vi)(A) through (h)(1)(vi)(D) of this section.

(A) Identification of each parameter, for each item of equipment, for which the owner or operator has elected to comply with the requirements of paragraph (h) of this section.

(B) A description of the applicable monitoring system(s), and of how compliance will be achieved with each requirement of paragraphs (h)(1)(i) through (h)(1)(v) of this section. The description shall identify the location and format (e.g., on-line storage, log entries) for each required record. If the description changes, the owner or operator shall retain both the current and the most recent superseded description,

as provided in paragraph (a) of this section, except as provided in paragraph (h)(1)(vi)(D) of this section.

(C) A description, and the date, of any change to the monitoring system that would reasonably be expected to impair its ability to comply with the requirements of paragraph (h)(1) of this section.

(D) Owners and operators subject to paragraph (h)(1)(vi)(B) of this section shall retain the current description of the monitoring system as long as the description is current. The current description shall, at all times, be retained on-site or be accessible from a central location by computer or other means that provides access within 2 hours after a request. The owner or operator shall retain all superseded descriptions for at least 5 years after the date of their creation. Superseded descriptions shall be retained on-site (or accessible from a central location by computer or other means that provides access within 2 hours after a request) for at least 6 months after their creation. Thereafter, superseded descriptions may be stored off-site.

(2) If an owner or operator has elected to implement the requirements of paragraph (h)(1) of this section for a monitored parameter with respect to an item of equipment and a period of 6 consecutive months has passed without an excursion as defined in paragraph (h)(2)(iv) of this section, the owner or operator is no longer required to record the daily average (or batch cycle daily average) value for any operating day when the daily average (or batch cycle daily average) value is less than the maximum or greater than the minimum established limit. With approval by the Administrator, monitoring data generated prior to the compliance date of this subpart shall be credited toward the period of 6 consecutive months, if the parameter limit and the monitoring accomplished during the period prior to the compliance date was required and/or approved by the Administrator.

(i) If the owner or operator elects not to retain the daily average (or batch cycle daily average) values, the owner or operator shall notify the Administrator in the next Periodic Report as specified in paragraph (e)(6)(x) of this section. The notification shall identify the parameter and unit of equipment.

(ii) If, on any operating day after the owner or operator has ceased recording daily average (or batch cycle daily average) values as provided in paragraph (h)(2) of this section, there is an excursion as defined in paragraph (h)(2)(iv) of this section, the owner or operator shall immediately resume retaining the daily average (or batch cycle daily average) value for each operating day and shall notify the Administrator in the next Periodic Report. The owner or operator shall continue to retain each daily average (or batch cycle daily average) value until another period of 6 consecutive months has passed without an excursion as defined in paragraph (h)(2)(iv) of this section.

(iii) The owner or operator shall retain the records specified in paragraphs (h)(1)(i) through (h)(1)(iii) of this section, for the duration specified in paragraph (h) of this section. For any calendar week, if compliance with paragraphs (h)(1)(i) through (h)(1)(iv) of this section does not result in retention of a record of at least one occurrence or measured parameter value, the owner or operator shall record and retain at least one parameter value during a period of operation other than a start-up, shutdown, or malfunction.

(iv) For purposes of paragraph (h) of this section, an excursion means that the daily average (or batch cycle daily average) value of monitoring data for a parameter is greater than the maximum, or less than the minimum established value, except as provided in paragraphs (h)(2)(iv)(A) and (h)(2)(iv)(B) of this section.

(A) The daily average (or batch cycle daily average) value during any start-up, shutdown, or malfunction shall not be considered an excursion for purposes of paragraph (h)(2) of this section, if the owner or operator follows the applicable provisions of the start-up, shutdown, and malfunction plan required by § 63.6(e)(3).

(B) An excused excursion, as described in § 63.1334(g), shall not be considered an excursion for purposes of paragraph (h)(2) of this section.

[61 FR 48229, Sept. 12, 1996, as amended at 64 FR 11553, Mar. 9, 1999; 65 FR 38131, June 19, 2000; 66 FR 36939, July 16, 2001]

TABLE 1 TO SUBPART JJJ OF PART 63—APPLICABILITY OF GENERAL PROVISIONS TO SUBPART JJJ AFFECTED SOURCES

Reference	Applies to Subpart JJJ	Explanation
§ 63.1(a)(1)	Yes	§ 63.1312 specifies definitions in addition to or that supersede definitions in § 63.2.
§ 63.1(a)(2)	Yes.	
§ 63.1(a)(3)	Yes	§ 63.1311(g) through (l) and § 63.160(b) identify those standards which may apply in addition to the requirements of subparts JJJ and H of this part, and specify how compliance shall be achieved.
§ 63.1(a)(4)	Yes	Subpart JJJ (this table) specifies the applicability of each paragraph in subpart A to subpart JJJ.
§ 63.1(a)(5)	No	[Reserved.].
§ 63.1(a)(6)–(8)	Yes.	
§ 63.1(a)(9)	No	[Reserved.].
§ 63.1(a)(10)	Yes.	
§ 63.1(a)(11)	Yes.	
§ 63.1(a)(12)–(14)	Yes.	
§ 63.1(b)(1)	No	§ 63.1310(a) contains specific applicability criteria.
§ 63.1(b)(2)	Yes.	
§ 63.1(b)(3)	No	§ 63.1310(b) provides documentation requirements for TPPUs not considered affected sources.
§ 63.1(c)(1)	Yes	Subpart JJJ (this table) specifies the applicability of each paragraph in subpart A to subpart JJJ.
§ 63.1(c)(2)	No	Area sources are not subject to subpart JJJ.
§ 63.1(c)(3)	No	[Reserved.].
§ 63.1(c)(4)	Yes.	
§ 63.1(c)(5)	Yes	Except that affected sources are not required to submit notifications that are not required by subpart JJJ.
§ 63.1(d)	No	[Reserved.].
§ 63.1(e)	Yes.	
§ 63.2	Yes	§ 63.1312 specifies those subpart A definitions that apply to subpart JJJ.
§ 63.3	Yes.	
§ 63.4(a)(1)–(3)	Yes.	
§ 63.4(a)(4)	No	[Reserved.].
§ 63.4(a)(5)	Yes.	
§ 63.4(b)	Yes.	
§ 63.4(c)	Yes.	
§ 63.5(a)(1)	Yes	Except the terms ''source'' and ''stationary source'' should be interpreted as having the same meaning as ''affected source.''
§ 63.5(a)(2)	Yes.	
§ 63.5(b)(1)	Yes	Except § 63.1310(i) defines when construction or reconstruction is subject to new source standards.
§ 63.5(b)(2)	No	[Reserved.].
§ 63.5(b)(3)	Yes.	
§ 63.5(b)(4)	Yes	Except that the Initial Notification and § 63.9(b) requirements do not apply.
§ 63.5(b)(5)	Yes.	
§ 63.5(b)(6)	Yes	Except that § 63.1310(i) defines when construction or reconstruction is subject to new source standards.
§ 63.5(c)	No	[Reserved.]
§ 63.5(d)(1)(i)	Yes	Except that the references to the Initial Notification and § 63.9(b)(5) do not apply.
§ 63.5(d)(1)(ii)	Yes	Except that § 63.5(d)(1)(ii)(H) does not apply.
§ 63.5(d)(1)(iii)	No	§§ 63.1335(e)(5) and 63.1331(a)(4) specify Notification of Compliance Status requirements.
§ 63.5(d)(2)	No.	
§ 63.5(d)(3)	Yes	Except § 63.5(d)(3)(ii) does not apply, and equipment leaks subject to § 63.1331 are exempt.
§ 63.5(d)(4)	Yes.	
§ 63.5(e)	Yes.	
§ 63.5(f)(1)	Yes.	
§ 63.5(f)(2)	Yes	Except that where § 63.9(b)(2) is referred to, the owner or operator need not comply.
§ 63.6(a)	Yes.	
§ 63.6(b)(1)	No	The dates specified in § 63.1311(b) apply, instead.
§ 63.6(b)(2)	No.	
§ 63.6(b)(3)	No.	
§ 63.6(b)(4)	No.	
§ 63.6(b)(5)	No.	
§ 63.6(b)(6)	No	[Reserved.].
§ 63.6(b)(7)	No.	

Reference	Applies to Subpart JJJ	Explanation
§ 63.6(c)(1)	Yes	Except that § 63.1311 specifies the compliance date.
§ 63.6(c)(2)	No.	
§ 63.6(c)(3)	No	[Reserved.].
§ 63.6(c)(4)	No	[Reserved.].
§ 63.6(c)(5)	Yes.	
§ 63.6(d)	No	[Reserved.].
§ 63.6(e)	Yes	Except as otherwise specified for individual paragraphs. Does not apply to Group 2 emissionpoints, unless they are included in an emissions average.[a]
§ 63.6(e)(1)(i)	No	This is addressed by § 63.1310(j)(4).
§ 63.6(e)(1)(ii)	Yes.	
§ 63.6(e)(1)(iii)	Yes.	
§ 63.6(e)(2)	Yes.	
§ 63.6(e)(3)(i)	Yes	For equipment leaks (subject to § 63.1331), the start-up, shutdown, and malfunction plan requirement of § 63.6(e)(3)(i) is limited to control devices and is optional for other equipment. The start-up, shutdown, malfunction plan may include written procedures that identifyconditions that justify a delay of repair.
§ 63.6(e)(3)(i)(A)	No	This is addressed by § 63.1310(j)(4).
§ 63.6(e)(3)(i)(B)	Yes.	
§ 63.6(e)(3)(i)(C)	Yes.	
§ 63.6(e)(3)(ii)	Yes.	
§ 63.6(e)(3)(iii)	No	Recordkeeping and reporting are specified in § 63.1335(b)(1).
§ 63.6(e)(3)(iv)	No	Recordkeeping and reporting are specified in § 63.1335(b)(1).
§ 63.6(e)(3)(v)	Yes.	
§ 63.6(e)(3)(vi)	Yes.	
§ 63.6(e)(3)(vii)	Yes.	
§ 63.6(e)(3)(vii)(A)	Yes.	
§ 63.6(e)(3)(vii)(B)	Yes	Except the plan shall provide for operation in (B) compliance with § 63.1310(j)(4).
§ 63.6(e)(3)(vii)(C)	Yes.	
§ 63.6(e)(3)(viii)	Yes.	
§ 63.6(f)(1)	Yes.	
§ 63.6(f)(2)	Yes	Except § 63.7(c), as referred to in § 63.6(f)(2)(iii)(D), does not apply, and except that § 63.6(f)(2)(ii) does not apply to equipment leaks subject to § 63.1331.
§ 63.6(f)(3)	Yes.	
§ 63.6(g)	Yes.	
§ 63.6(h)	No	Subpart JJJ does not require opacity and visible emission standards.
§ 63.6(i)(1)	Yes.	
§ 63.6(i)(2)	Yes.	
§ 63.6(i)(3)	Yes.	
§ 63.6(i)(4)(i)(A)	Yes.	
§ 63.6(i)(4)(i)(B)	No	Dates are specified in § 63.1311(e) and § 63.1335(e)(3)(i).
§ 63.6(i)(4)(ii)	No.	
§ 63.6(i)(5)–(14)	Yes.	
§ 63.6(i)(15)	No	[Reserved.].
§ 63.6(i)(16)	Yes.	
§ 63.6(j)	Yes.	
§ 63.7(a)(1)	Yes.	
§ 63.7(a)(2)	No	§ 63.1335(e)(5) specifies the submittal dates of performance test results for all emission points except equipment leaks; for equipment leaks, compliance demonstration results are reported in the Periodic Reports.
§ 63.7(a)(3)	Yes.	
§ 63.7(b)	No	§ 63.1333(a)(4) specifies notification requirements.
§ 63.7(c)	No.	
§ 63.7(d)	Yes.	
§ 63.7(e)(1)	Yes	Except that all performance tests shall be conducted at maximum representative operating conditions achievable at the time without disruption of operations or damage to equipment.
§ 63.7(e)(2)	Yes.	
§ 63.7(e)(3)	No	Subpart JJJ specifies requirements.
§ 63.7(e)(4)	Yes.	
§ 63.7(f)	Yes	Except that § 63.144(b)(5)(iii)(A) and (B) shall apply for process wastewater. Also, because a site specific test plan is not required, the notification deadline in § 63.7(f)(2)(i) shall be 60 days prior to the performance test, and in § 63.7(f)(3), approval or disapproval of the alternative test method shall not be tied to the site specific test plan.

Reference	Applies to Subpart JJJ	Explanation
§ 63.7(g)	Yes	Except that the requirements in § 63.1335(e)(5) shall apply instead of references to the Notification of Compliance Status report in § 63.9(h). In addition, equipment leaks subject to § 63.1331 are not required to conduct performance tests.
§ 63.7(h)	Yes	Except § 63.7(h)(4)(ii) is not applicable, because the site-specific test plans in § 63.7(c)(2) are not required.
§ 63.8(a)(1)	Yes.	
§ 63.8(a)(2)	No.	
§ 63.8(a)(3)	No	[Reserved.].
§ 63.8(a)(4)	Yes.	
§ 63.8(b)(1)	Yes.	
§ 63.8(b)(2)	No	Subpart JJJ specifies locations to conduct monitoring.
§ 63.8(b)(3)	Yes.	
§ 63.8(c)(1)	Yes.	
§ 63.8(c)(1)(i)	Yes.	
§ 63.8(c)(1)(ii)	No	For all emission points except equipment leaks, comply with § 63.1335(b)(1)(i)(B); for equipment leaks, comply with § 63.181(g)(2)(iii).
§ 63.8(c)(1)(iii)	Yes.	
§ 63.8(c)(2)	Yes.	
§ 63.8(c)(3)	Yes.	
§ 63.8(c)(4)	No	§ 63.1334 specifies monitoring frequency; not applicable to equipment leaks because § 63.1331 does not require continuous monitoring systems.
§ 63.8(c)(5)–(8)	No.	
§ 63.8(d)	No.	
§ 63.8(e)	No.	
§ 63.8(f)(1)–(3)	Yes.	
§ 63.8(f)(4)(i)	No	Timeframe for submitting request is specified in § 63.1335(f) or (g); not applicable to equipment leaks because § 63.1331 (through reference to subpart H) specifies acceptable alternative methods.
§ 63.8(f)(4)(ii)	No	Contents of requests are specified in § 63.1335(f) or (g).
§ 63.8(f)(4)(iii)	No.	
§ 63.8(f)(5)(i)	Yes.	
§ 63.8(f)(5)(ii)	No.	
§ 63.8(f)(5)(iii)	Yes.	
§ 63.8(f)(6)	No	Subpart JJJ does not require continuous emission monitors.
§ 63.8(g)	No	Data reduction procedures specified in § 63.1335(d) and (h); not applicable to equipment leaks.
§ 63.9(a)	Yes.	
§ 63.9(b)	No	Subpart JJJ does not require an initial notification.
§ 63.9(c)	Yes.	
§ 63.9(d)	Yes.	
§ 63.9(e)	No	§ 63.1333(a)(4) specifies notification deadline.
§ 63.9(f)	No	Subpart JJJ does not require opacity and visible emission standards.
§ 63.9(g)	No.	
§ 63.9(h)	No	§ 63.1335(e)(5) specifies Notification of Compliance Status requirements.
§ 63.9(i)	Yes.	
§ 63.9(j)	No.	
§ 63.10(a)	Yes.	
§ 63.10(b)(1)	No	§ 63.1335(a) specifies record retention requirements.
§ 63.10(b)(2)	No	Subpart JJJ specifies recordkeeping requirements.
§ 63.10(b)(3)	No	§ 63.1310(b) requires documentation of sources that are not affected sources.
§ 63.10(c)	No	§ 63.1335 specifies recordkeeping requirements.
§ 63.10(d)(1)	Yes.	
§ 63.10(d)(2)	No	§ 63.1335(e) specifies performance test reporting requirements; not applicable to equipment leaks.
§ 63.10(d)(3)	No	Subpart JJJ does not require opacity and visible emission standards.
§ 63.10(d)(4)	Yes.	
§ 63.10(d)(5)(i)	Yes	Except that reports required by § 63.10(d)(5)(i) may be submitted at the same time as Periodic Reports specified in § 63.1335(e)(6). The start-up, shutdown, and malfunction plan, and any records or reports of start-up, shutdown, and malfunction do not apply to Group 2 emission points unless they are included in an emissions average.
§ 63.10(d)(5)(ii)	No.	
§ 63.10(e)	No	§ 63.1335 specifies reporting requirements.
§ 63.10(f)	Yes.	

Reference	Applies to Subpart JJJ	Explanation
§ 63.11	Yes	§ 63.11(b) specifies requirements for flares used to comply with provisions of this subpart. § 63.1333(e) contains the requirements to conduct compliance demonstrations for flares subject to this subpart.
§ 63.12	Yes	Except that the authority of § 63.1332(i) and the authority of § 63.177 (for equipment leaks) shall not be delegated to States.
§§ 63.13–63.15	Yes.	

[a] The plan and any records or reports of start-up, shutdown, and malfunction do not apply to Group 2 emission points unless they are included in an emissions average.

[66 FR 36939, July 16, 2001]

Table 2 to Subpart JJJ of Part 63—Group 1 Storage Vessels at Existing Affected Sources

Vessel capacity (cubic meters)	Vapor pressure [a] (kilopascals)
75≤capacity 151	≥13.1
151≤capacity	≥5.2

[a] Maximum true vapor pressure of total organic HAP at storage temperature.

[65 FR 38142, June 19, 2000]

Table 3 to Subpart JJJ of Part 63—Group 1 Storage Vessels at Existing Affected Sources Producing the Listed Thermoplastics

Thermoplastic	Chemical [a]	Vessel capacity (cubic meters)	Vapor pressure [b] (kilopascals)
ASA/AMSAN [c]	styrene/acrylonitrile mixture	≥ 3.78	≥ 0.47
	acrylonitrile	≥ 75.7	≥ 1.62
Polystyrene, continuous processes	all chemicals	<75.7	≥ 14.2
		≥ 75.7.	≥ 1.9
Nitrile[c]	acrylonitrile	≥ 13.25	≥ 1.8

[a] Vessel capacity and vapor pressure criteria are specific to the listed chemical or to ''all chemicals,'' as indicated.
[b] Maximum true vapor pressure of total organic HAP at storage temperature.
[c] The applicability criteria in Table 2 of this subpart shall be used for chemicals not specifically listed in this table (i.e., Table 3).

[64 FR 11553, Mar. 9, 1999]

Table 3 to Subpart JJJ of Part 63—Group 1 Storage Vessels at Existing Affected Sources Producing the Listed Thermoplastics

Vessel capacity (cubic meters)	Vapor pressure [a] (kilopascals)
38 ≤ capacity < 151	≥13.1
151 ≤ capacity	≥0.7

[a] Maximum true vapor pressure of total organic HAP at storage temperature.

Table 5 to Subpart JJJ of Part 63—Group 1 Storage Vessels at New Affected Sources Producing the Listed Thermoplastics

Thermoplastic	Chemical [a]	Vessel capacity (cubic meters)	Vapor pressure [b] (kilopascals)
ASA/AMSAN [c]	Styrene/ acrylonitrile mixture	≥ 3.78	≥ 0.47
	Acrylonitrile	≥ 75.7	≥ 1.62
SAN, continuous [d]	All chemicals	≥ 2,271	≥ 0.5 and < 0.7

Thermoplastic	Chemical [a]	Vessel capacity (cubic meters)	Vapor pressure [b] (kilopascals)
		< 151	≥ 10
		≥ 151	≥ 0.7
Nitrile [c]	Acrylonitrile	≥ 13.25	≥ 1.8
Polystyrene, continuous processes	All chemicals	≥ 19.6 and <45.4	≥ 7.48
		≥ 45.4 and <109.8	≥ 0.61
		≥ 109.8	≥ 0.53
ABS, continuous mass	Styrene	≥ 45.43	≥ 0.078
	All other chemicals	≥ 38 and < 45.43	≥ 13.1
		≥ 45.43	≥ 0.53

[a] Vessel capacity and vapor pressure criteria are specific to the listed chemical, to ''all chemicals,'' or to ''all other chemicals,'' as indicated.
[b] Maximum true vapor pressure of total organic HAP at storage temperature.
[c] The applicability criteria in Table 4 of this subpart shall be used for chemicals not specifically listed in this table (i.e., Table 5).
[d] The control level for the first two sets of applicability criteria are specified in 63.1314 as 90% and 98%, respectively. The control level for the third set of applicability criteria is the HON control level of 95%.

[64 FR 11553, Mar. 9, 1999]

Table 6 to Subpart JJJ of Part 63—Known organic HAP emitted from the production of thermoplastic products

Thermoplastic product/Subcategory	Organic HAP/chemical name (CAS No.)							
	Acetaldehyde (75–07–0)	Acrylonitrile (107–13–1)	1,3 Butadiene (106–99–0)	1,4-Dioxane (123–91–1)	Ethylene Glycol (107–21–1)	Methanol (67–56–1)	Methyl methacrylate (80–62–6)	Styrene (100–42–5)
ABS latex		✔	✔					✔
ABS using a batch emulsion process		✔	✔					✔
ABS using a batch suspension process		✔	✔					✔
ABS using a continuous emulsion process		✔	✔					✔
ABS using a continuous mass process		✔	✔					✔
ASA/AMSAN		✔						✔
EPS								✔
MABS		✔	✔					✔
MBS			✔				✔	✔
Nitrile resin		✔						
PET using a batch dimethyl terephthalate process	✔			✔	✔	✔		
PET using a batch terephthalic acid process	✔			✔	✔			
PET using a continuous dimethyl terephthalate process	✔			✔	✔	✔		
PET using a continuous terephthalic acid process	✔			✔	✔			
PET using a continuous terephthalic acid high viscosity multiple end finisher process	✔			✔	✔			
Polystyrene resin using a batch process								✔
Polystyrene resin using a continuous process								✔
SAN using a batch process		✔						✔
SAN using a continuous process		✔						✔

CAS No. = Chemical Abstract Service Number.
ABS = Acrylonitrile butadiene styrene resin.
ASA/AMSAN = Acrylonitrile styrene resin/alpha methyl styrene acrylonitrile resin.
EPS = expandable polystyrene resin.
MABS = methyl methacrylate acrylonitrile butadiene styrene resin.
PET = poly(ethylene terephthalate) resin.
SAN = styrene acrylonitrile resin.
MBS = methyl methacrylate butadiene styrene resin.

[66 FR 36942, July 16, 2001]

TABLE 7 TO SUBPART JJJ OF PART 63—GROUP 1 BATCH PROCESS VENTS AND AGGREGATE BATCH VENT STREAMS—MONITORING, RECORDKEEPING, AND REPORTING REQUIREMENTS

Control device	Parameters to be monitored	Recordkeeping and reporting requirements for monitored parameters
Thermal incinerator	Firebox temperature [a]	1. Continuous records as specified in § 63.1326(e)(1).[b] 2. Record and report the average firebox temperature measured during the performance test—NCS.[c] 3. Record the batch cycle daily average firebox temperature as specified in § 63.1326(e)(2). 4. Report all batch cycle daily average temperatures that are below the minimum operating value established in the NCS or operating permit and all instances when monitoring data are not collected—PR.[d e]
Catalytic incinerator	Temperature upstream and downstream of the catalyst bed.	1. Continuous records as specified in § 63.1326(e)(1).[b] 2. Record and report the average upstream and bed downstream temperatures and the average temperature difference across the catalyst bedmeasured during the performance test—NCS.[c] 3. Record the batch cycle daily average upstream temperature and temperature difference across catalyst bed as specified in § 63.1326(e)(2). 4. Report all batch cycle daily average upstream temperatures that are below the minimum upstream value established in the NCS or operating permit—PR.[d e] 5. Report all batch cycle daily average temperature differences across the catalyst bed that are below the minimum difference established in the NCS or operating permit—PR.[d,e] 6. Report all instances when monitoring data are not collected.[e]
Boiler or Process Heater with a design heat input capacity less than 44 megawatts and where the batch process vents or aggregate batch vent streams are not introduced with or used as the primary fuel.	Firebox temperature [a]	1. Continuous records as specified in § 63.1326(e)(1).[b] 2. Record and report the average firebox temperature measured during the performance test—NCS.[c] 3. Record the batch cycle daily average firebox temperature as specified in § 63.1326(e)(2).[d] 4. Report all batch cycle daily average temperatures that are below the minimum operating value established in the NCS or operating permit and all instances when monitoring data are not collected—PR.[d e]
Flare	Presence of a flame at the pilot light.	1. Hourly records of whether the monitor was continuously operating during batch emission episodes, or portions thereof, selected for control and whether a flame was continuously present at the pilot light during said periods. 2. Record and report the presence of a flame at the pilot light over the full period of the compliance determination—NCS.[c] 3. Record the times and durations of all periods during batch emission episodes, or portions thereof, selected for control when all flames at the pilot light of a flare are absent or the monitor is not operating. 4. Report the times and durations of all periods during batch emission episodes, or portions thereof, selected for control when all flames at the pilot light of a flare are absent—PR.[d]
Scrubber for halogenated batch process vents or aggregate batch vent strreams (Note: Controlled by a combustion device other than a flare).	a. pH of scrubber effluent, and	1. Continuous records as specified in § 63.1326(e)(1).[b] 2. Record and report the average pH of the scrubber effluent measured during the performance test—NCS.[c] 3. Record the batch cycle daily average pH of the scrubber effluent as specified in § 63.1326(e)(2). 4. Report all batch cycle daily average pH values of the scrubber effluent that are below the minimum operating value established in the NCS or operating permit and all instances when monitoring data are not collected—PR.[d e]
	b. Scrubber liquid and gas flow rates.	1. Records as specified in § 63.1326(e)(1).[b] 2. Record and report the scrubber liquid/gas ratio averaged over the full period of the performance test—NCS.[c] 3. Record the batch cycle daily average scrubber liquid/gas ratio as specified in § 63.1326(e)(2).

Control device	Parameters to be monitored	Recordkeeping and reporting requirements for monitored parameters
		4. Report all batch cycle daily average scrubber liquid/gas ratios that are below the minimum value established in the NCS or operating permit and all instances when monitoring data are not collected—PR.[d e]
Absorber[f]	a. Exit temperature of the absorbing liquid, and.	1. Continuous records as specified in § 63.1326(e)(1).[b] 2. Record and report the average exit temperature of the absorbing liquid measured during the performance test—NCS.[c] 3. Record the batch cycle daily average exit temperature of the absorbing liquid as specified in § 63.1326(e)(2) for each batchcycle. 4. Report all the batch cycle daily average exit temperatures of the absorbing liquid that are above the maximum operating value established in the NCS or operating permit and all instances when monitoring data are not collected—PR.[d e]
	b. Exit specific gravity for the absorbing liquid.	1. Continuous records as specified in § 63.1326(e)(1).[b] 2. Record and report the average exit specific gravity measured during the performance test—NCS.[c] 3. Record the batch cycle daily average exit specific gravity as specified in § 63.1326(e)(2). 4. Report all batch cycle daily average exit specific gravity values that are above the maximum operating value established in the NCS or operating permit and all instances when monitoring data are not collected—PR.[d e]
Condenser[f]	Exit (product side) temperature.	1. Continuous records as specified in § 63.1326(e)(1).[b] 2. Record and report the average exit temperature measured during the performance test—NCS.[c] 3. Record the batch cycle daily average exit temperature as specified in § 63.1326(e)(2). 4. Report all batch cycle daily average exit temperatures that are above the maximum operating value established in the NCS or operating permit and all instances when monitoring data are not collected—PR.[d e]
Carbon Adsorber[f]	a. Total regeneration steam flow or nitrogen flow, or pressure (gauge or absolute) during carbon bed regeneration cycle(s), and.	1. Record the total regeneration steam flow or nitrogen flow, or pressure for each carbon bed regeneration cycle. 2. Record and report the total regeneration steam flow or nitrogen flow,or pressure during carbon bed regeneration cycle measured during the performance test—NCS.[c] 3. Report all carbon bed regeneration cycles when the total regeneration steam flow or nitrogen flow, or pressure is above the maximum value established in the NCS or operating permit—PR.[d e]
	b. Temperature of the carbon bed after regeneration and within 15 minutes of completing any cooling cycle(s).	1. Record the temperature of the carbon bed after each regeneration and within 15 minutes of completing any cooling cycle(s). 2. Record and report the temperature of the carbon bed after each regeneration and within 15 minutes of completing any cooling cycle(s) measured during the performance test—NCS.[c] 3. Report all carbon bed regeneration cycles when the temperature of the carbon bed after regeneration, or within 15 minutes of completing any cooling cycle(s), is above the maximum value established in the NCS or operating permit—PR.[d e]
All control devices	a. Diversion to the atmosphere from the control device or.	1. Hourly records of whether the flow indicator was operating during batch emission episodes, or portions thereof, selected for control and whether a diversion was detected at any time during said periods as specified in § 63.1326(e)(3). 2. Record and report the times of all periods during batch emission episodes, or portions thereof, selected for control when emissions are diverted through a bypass line or the flow indicator is not operating—PR.[d]
	b. Monthly inspection of sealed valves..	1. Records that monthly inspections were performed as specified in § 63.1326(e)(4)(i). 2. Record and report all monthly inspections that show the valves are in the diverting position or that a seal has been broken—PR.[d]

Control device	Parameters to be monitored	Recordkeeping and reporting requirements for monitored parameters
Absorber, condenser, and carbon Adsorber (as an alternative to the requirements previously presented in this table).	Concentration level or reading indicated by an organic monitoring device at the outlet of the control device.	1. Continuous records as specified in § 63.1326(e)(1).[b] 2. Record and report the average batch vent concentration level or reading measured during the performance test—NCS.[c] 3. Record the batch cycle daily average concentration level or reading as specified § 63.1326(e)(2). 4. Report all batch cycle daily average concentration levels or readings that are above the maximum value established in the NCS or operating permit and all instances when monitoring data are not collected—PR.[d e]

[a] Monitor may be installed in the firebox or in the ductwork immediately downstream of the firebox before any substantial heat exchange is encountered.
[b] "Continuous records" is defined in § 63.111.
[c] NCS = Notification of Compliance Status described in § 63.1335(e)(5).
[d] PR = Periodic Reports described in § 63.1335(e)(6).
[e] The periodic reports shall include the duration of periods when monitoring data are not collected as specified in § 63.1335(e)(6)(iii)(C).
[f] Alternatively, these devices may comply with the organic monitoring device provisions listed at the end of this table.

[66 FR 36939, July 16, 2001]

Table 8 to Subpart JJJ of Part 63—Operating Parameters for Which Levels Are Required To Be Established for Continuous and Batch Process Vents and Aggregate Batch Vent Streams

Device	Parameters to be monitored	Established operating parameter(s)
Thermal incinerator	Firebox temperature	Minimum temperature.
Catalytic incinerator	Temperature upstream and downstream of the catalyst bed.	Minimum upstream temperature; and minimum temperature difference across the catalyst bed.
Boiler or process heater	Firebox temperature	Minimum temperature.
Scrubber for halogenated vents	pH of scrubber effluent; and scrubber liquid and gas flow rates [§ 63.1324(b)(4)(ii)].	Minimum pH; and minimum liquid/gas ratio.
Absorber	Exit temperature of the absorbing liquid; and exit specific gravity of the absorbing liquid.	Maximum temperature; and maximum specific gravity.
Condenser	Exit temperature	Maximum temperature.
Carbon adsorber	Total regeneration steam flow or nitrogen flow, or pressure (gauge or absolute)[a] during carbon bed regeneration cycle; and temperature of the carbon bed after regeneration (and within 15 minutes of completing any cooling cycle(s)).	Maximum flow or pressure; and maximum temperature.
Other devices (or as an alternate to the requirements previously presented in this table)[b].	HAP concentration level or reading at outlet of device.	Maximum HAP concentration or reading.

[a] 25 to 50 mm (absolute) is a common pressure level obtained by pressure swing absorbers.
[b] Concentration is measured instead of an operating parameter.

[65 FR 38145, June 19, 2000]

Table 9 to Subpart JJJ of Part 63—Routine reports required by this subpart

Reference	Description of report	Due date
§ 63.1335(b) and subpart A	Refer to Table 1 and subpart A	Refer to subpart A.
§ 63.1335(e)(3)	Precompliance Report[a]	Existing affected sources—December 19, 2000. New affected sources—with application for approval of construction or reconstruction.
§ 63.1335(e)(4)	Emissions Averaging Plan	September 19, 2000.
§ 63.1335(e)(4)(iv)	Updates to Emissions Averaging Plan	120 days prior to making the change necessitating the update.
§ 63.1335(e)(5)	Notification of Compliance Status[b]	Within 150 days after the compliance date.

Reference	Description of report	Due date
§ 63.1335(e)(6)	Periodic Reports	Semiannually, no later than 60 days after the end of each 6-month period. See § 63.1335(e)(6)(i) for the due date for the first report.
§ 63.1335(e)(6)(xi)	Quarterly reports for Emissions Averaging.	No later than 60 days after the end of each quarter. First report is due with the Notification of Compliance Status.
§ 63.1335(e)(6)(xii)	Quarterly reports upon request of the Administrator.	No later than 60 days after the end of each quarter.
§ 63.1335(e)(7)(i)	Storage Vessels Notification of Inspection.	At least 30 days prior to the refilling of each storage vessel or the inspection of each storage vessel.
§ 63.1335(e)(7)(ii)	Requests for Approval of a Nominal Control Efficiency for Use in Emissions Averaging.	Initial submittal is due with the Emissions Averaging Plan specified in § 63.1335(e)(4)(ii); later submittals are made at the discretion of the owner or operator as specified in § 63.1335(e)(7)(ii) (B).
§ 63.1335(e)(7)(iii)	Notification of Change in the Primary Product.	1. For notification under § 63.1310(f)(3)(ii)—notification submittal date at the discretion of the owner or operator.[c] 2. For notification under § 63.1310(f)(4)(ii)—within 6 months of making the determination.

[a] There may be two versions of this report due at different times; one for equipment subject to § 63.1331 and one for other emission points subject to this subpart.
[b] There will be two versions of this report due at different times; one for equipment subject to § 63.1331 and one for other emission points subject to this subpart.
[c] Note that the TPPU remains subject to this subpart until the notification under § 63.1310(f)(3)(i) is made.

[66 FR 36939, July 16, 2001]

Subpart KKK [Reserved]

Subpart LLL—National Emission Standards for Hazardous Air Pollutants From the Portland Cement Manufacturing Industry

SOURCE: 64 FR 31925, June 14, 1999, unless otherwise noted.

GENERAL

§ 63.1340 Applicability and designation of affected sources.

(a) Except as specified in paragraphs (b) and (c) of this section, the provisions of this subpart apply to each new and existing portland cement plant which is a major source or an area source as defined in § 63.2.

(b) The affected sources subject to this subpart are:

(1) Each kiln and each in-line kiln/raw mill at any major or area source, including alkali bypasses, except for kilns and in-line kiln/raw mills that burn hazardous waste and are subject to and regulated under subpart EEE of this part;

(2) Each clinker cooler at any portland cement plant which is a major source;

(3) Each raw mill at any portland cement plant which is a major source;

(4) Each finish mill at any portland cement plant which is a major source;

(5) Each raw material dryer at any portland cement plant which is a major source and each greenfield raw material dryer at any portland cement plant which is a major or area source;

(6) Each raw material, clinker, or finished product storage bin at any portland cement plant which is a major source;

(7) Each conveying system transfer point at any portland cement plant which is a major source;

(8) Each bagging system at any portland cement plant which is a major source; and

(9) Each bulk loading or unloading system at any portland cement plant which is a major source.

(c) For portland cement plants with on-site nonmetallic mineral processing facilities, the first affected source in the sequence of materials handling operations subject to this subpart is the raw material storage, which is just

prior to the raw mill. The primary and secondary crushers and any other equipment of the on-site nonmetallic mineral processing plant which precedes the raw material storage are not subject to this subpart. Furthermore, the first conveyor transfer point subject to this subpart is the transfer point associated with the conveyor transferring material from the raw material storage to the raw mill.

(d) The owner or operator of any affected source subject to the provisions of this subpart is subject to title V permitting requirements.

EFFECTIVE DATE NOTE: At 67 FR 16619, Apr. 5, 2002, § 63.1340 was amended by by revising paragraphs (b)(7), (8), and (c) and removing paragraph (b)(9), effective July 5, 2002. For the convenience of the user, the revised text is set forth as follows:

§ 63.1340 Applicability and designation of affected sources.

* * * * *

(b) * * *

(7) Each conveying system transfer point including those associated with coal preparation used to convey coal from the mill to the kiln at any portland cement plant which is a major source; and

(8) Each bagging and bulk loading and unloading system at any portland cement plant which is a major source.

(c) For portland cement plants with on-site nonmetallic mineral processing facilities, the first affected source in the sequence of materials handling operations subject to this subpart is the raw material storage, which is just prior to the raw mill. Any equipment of the on-site nonmetallic mineral processing plant which precedes the raw material storage is not subject to this subpart. In addition, the primary and secondary crushers of the on-site nonmetallic mineral processing plant, regardless of whether they precede the raw material storage, are not subject to this subpart. Furthermore, the first conveyor transfer point subject to this subpart is the transfer point associated with the conveyor transferring material from the raw material storage to the raw mill.

* * * * *

§ 63.1341 Definitions.

All terms used in this subpart that are not defined in this section have the meaning given to them in the CAA and in subpart A of this part.

Alkali bypass means a duct between the feed end of the kiln and the preheater tower through which a portion of the kiln exit gas stream is withdrawn and quickly cooled by air or water to avoid excessive buildup of alkali, chloride and/or sulfur on the raw feed. This may also be referred to as the ''kiln exhaust gas bypass''.

Bagging system means the equipment which fills bags with portland cement.

Clinker cooler means equipment into which clinker product leaving the kiln is placed to be cooled by air supplied by a forced draft or natural draft supply system.

Continuous monitor means a device which continuously samples the regulated parameter specified in § 63.1350 of this subpart without interruption, evaluates the detector response at least once every 15 seconds, and computes and records the average value at least every 60 seconds, except during allowable periods of calibration and except as defined otherwise by the continuous emission monitoring system performance specifications in appendix B to part 60 of this chapter.

Conveying system means a device for transporting materials from one piece of equipment or location to another location within a facility. Conveying systems include but are not limited to the following: feeders, belt conveyors, bucket elevators and pneumatic systems.

Conveying system transfer point means a point where any material including but not limited to feed material, fuel, clinker or product, is transferred to or from a conveying system, or between separate parts of a conveying system.

Dioxins and furans (D/F) means tetra-, penta-, hexa-, hepta-, and octachlorinated dibenzo dioxins and furans.

Facility means all contiguous or adjoining property that is under common ownership or control, including properties that are separated only by a road or other public right-of-way.

Feed means the prepared and mixed materials, which include but are not limited to materials such as limestone, clay, shale, sand, iron ore, mill scale, cement kiln dust and flyash, that are fed to the kiln. Feed does not include the fuels used in the kiln to produce heat to form the clinker product.

Finish mill means a roll crusher, ball and tube mill or other size reduction equipment used to grind clinker to a fine powder. Gypsum and other materials may be added to and blended with clinker in a finish mill. The finish mill also includes the air separator associated with the finish mill.

Greenfield kiln, in-line kiln/raw mill, or raw material dryer means a kiln, in-line kiln/raw mill, or raw material dryer for which construction is commenced at a plant site (where no kilns and no in-line kiln/raw mills were in operation at any time prior to March 24, 1998) after March 24, 1998.

Hazardous waste is defined in §261.3 of this chapter.

In-line kiln/raw mill means a system in a portland cement production process where a dry kiln system is integrated with the raw mill so that all or a portion of the kiln exhaust gases are used to perform the drying operation of the raw mill, with no auxiliary heat source used. In this system the kiln is capable of operating without the raw mill operating, but the raw mill cannot operate without the kiln gases, and consequently, the raw mill does not generate a separate exhaust gas stream.

Kiln means a device, including any associated preheater or precalciner devices, that produces clinker by heating limestone and other materials for subsequent production of portland cement.

Kiln exhaust gas bypass means alkali bypass.

Monovent means an exhaust configuration of a building or emission control device (e. g. positive pressure fabric filter) that extends the length of the structure and has a width very small in relation to its length (i. e., length to width ratio is typically greater than 5:1). The exhaust may be an open vent with or without a roof, louvered vents, or a combination of such features.

New brownfield kiln, in-line kiln raw mill, or raw material dryer means a kiln, in-line kiln/raw mill or raw material dryer for which construction is commenced at a plant site (where kilns and/or in-line kiln/raw mills were in operation prior to March 24, 1998) after March 24, 1998.

One-minute average means the average of thermocouple or other sensor responses calculated at least every 60 seconds from responses obtained at least once during each consecutive 15 second period.

Portland cement plant means any facility manufacturing portland cement.

Raw material dryer means an impact dryer, drum dryer, paddle-equipped rapid dryer, air separator, or other equipment used to reduce the moisture content of feed materials.

Raw mill means a ball and tube mill, vertical roller mill or other size reduction equipment, that is not part of an in-line kiln/raw mill, used to grind feed to the appropriate size. Moisture may be added or removed from the feed during the grinding operation. If the raw mill is used to remove moisture from feed materials, it is also, by definition, a raw material dryer. The raw mill also includes the air separator associated with the raw mill.

Rolling average means the average of all one-minute averages over the averaging period.

Run average means the average of the one-minute parameter values for a run.

TEQ means the international method of expressing toxicity equivalents for dioxins and furans as defined in U.S. EPA, Interim Procedures for Estimating Risks Associated with Exposures to Mixtures of Chlorinated Dibenzo-p-dioxins and -dibenzofurans (CDDs and CDFs) and 1989 Update, March 1989.

EFFECTIVE DATE NOTE: At 67 FR 16619, Apr. 5, 2002, §63.1341 was amended by adding the definition for the term *Bin* effective July 5, 2002. For the convenience of the user, the added text is set forth as follows:

§63.1341 Definitions.

* * * * *

Bin means a manmade enclosure for storage of raw materials, clinker, or finished product prior to further processing at a portland cement plant.

* * * * *

EMISSION STANDARDS AND OPERATING LIMITS

§63.1342 Standards: General.

(a) Table 1 to this subpart provides cross references to the 40 CFR part 63,

subpart A, general provisions, indicating the applicability of the general provisions requirements to subpart LLL.

(b) Table 1 of this section provides a summary of emission limits and operating limits of this subpart.

TABLE 1 TO § 63.1342.—EMISSION LIMITS AND OPERATING LIMITS

Affected source	Pollutant or opacity	Emission and operating limit
All kilns and in-line kiln/raw mills at major sources (including alkali bypass).	PM	0.15 kg/Mg of feed (dry basis).
	Opacity	20 percent.
All kilns and in-line kiln/raw mills at major and area sources (including alkali bypass).	D/F	0.20 ng TEQ/dscm or 0.40 ng TEQ/dscm when the average of the performance test run average particulate matter control device (PMCD) inlet temperatures is 204 °C or less. [Corrected to 7 percent oxygen] Operate such that the three-hour rolling average PMCD inlet temperature is no greater than the temperature established at performance test. If activated carbon injection is used: Operate such that the three-hour rolling average activated carbon injection rate is no less than rate established at performance test. Operate such that either the carrier gas flow rate or carrier gas pressure drop exceeds the value established at performance test. Inject carbon of equivalent specifications to that used at performance test.
New greenfield kilns and in-line kiln/raw mills at major and area sources.	THC	50 ppmvd, as propane, corrected to 7 percent oxygen.
All clinker coolers at major sources	PM	0.050 kg/Mg of feed (dry basis)
	Opacity	10 percent.
All raw mills and finish mills at major sources	Opacity	10 percent.
New greenfield raw material dryers at major and area sources.	THC	50 ppmvd, as propane, corrected to 7 percent oxygen.
All raw material dryers and material handling points at major sources.	Opacity	10 percent.

§ 63.1343 Standards for kilns and in-line kiln/raw mills.

(a) *General*. The provisions in this section apply to each kiln, each in-line kiln/raw mill, and any alkali bypass associated with that kiln or in-line kiln/raw mill.

(b) *Existing, reconstructed, or new brownfield/major sources*. No owner or operator of an existing, reconstructed or new brownfield kiln or an existing, reconstructed or new brownfield in-line kiln/raw mill at a facility that is a major source subject to the provisions of this subpart shall cause to be discharged into the atmosphere from these affected sources, any gases which:

(1) Contain particulate matter (PM) in excess of 0.15 kg per Mg (0.30 lb per ton) of feed (dry basis) to the kiln. When there is an alkali bypass associated with a kiln or in-line kiln/raw mill, the combined particulate matter emissions from the kiln or in-line kiln/raw mill and the alkali bypass are subject to this emission limit.

(2) Exhibit opacity greater than 20 percent.

(3) Contain D/F in excess of:

(i) 0.20 ng per dscm (8.7×10^{-11} gr per dscf) (TEQ) corrected to seven percent oxygen; or

(ii) 0.40 ng per dscm (1.7×10^{-10} gr per dscf) (TEQ) corrected to seven percent oxygen, when the average of the performance test run average temperatures at the inlet to the particulate matter control device is 204 °C (400 °F) or less.

(c) *Greenfield/major sources*. No owner or operator that commences construction of a greenfield kiln or greenfield inline kiln/raw mill at a facility which is a major source subject to the provisions of this subpart shall cause to be discharged into the atmosphere from these affected sources any gases which:

(1) Contain particulate matter in excess of 0.15 kg per Mg (0.30 lb per ton) of feed (dry basis) to the kiln. When there is an alkali bypass associated with a kiln or in-line kiln/raw mill, the combined particulate matter emissions from the kiln or in-line kiln/raw mill and the bypass stack are subject to this emission limit.

(2) Exhibit opacity greater than 20 percent.

(3) Contain D/F in excess of:

(i) 0.20 ng per dscm (8.7×10^{-11} gr per dscf) (TEQ) corrected to seven percent oxygen; or

(ii) 0.40 ng per dscm (1.7×10^{-10} gr per dscf) (TEQ) corrected to seven percent oxygen, when the average of the performance test run average temperatures at the inlet to the particulate matter control device is 204 °C (400 °F) or less.

(4) Contain total hydrocarbon (THC), from the main exhaust of the kiln or in-line kiln/raw mill, in excess of 50 ppmvd as propane, corrected to seven percent oxygen.

(d) *Existing, reconstructed, or new brownfield/area sources.* No owner or operator of an existing, reconstructed, or new brownfield kiln or an existing, reconstructed or new brownfield in-line kiln/raw mill at a facility that is an area source subject to the provisions of this subpart shall cause to be discharged into the atmosphere from these affected sources any gases which contain D/F in excess of:

(1) 0.20 ng per dscm (8.7×10^{-11} gr per dscf) (TEQ) corrected to seven percent oxygen; or

(2) 0.40 ng per dscm (1.7×10^{-10} gr per dscf) (TEQ) corrected to seven percent oxygen, when the average of the performance test run average temperatures at the inlet to the particulate matter control device is 204 °C (400 °F) or less.

(e) *Greenfield/area sources.* No owner or operator of a greenfield kiln or a greenfield in-line kiln/raw mill at a facility that is an area source subject to the provisions of this subpart shall cause to be discharged into the atmosphere from these affected sources any gases which:

(1) Contain D/F in excess of:

(i) 0.20 ng per dscm (8.7×10^{-11} gr per dscf) (TEQ) corrected to seven percent oxygen; or

(ii) 0.40 ng per dscm (1.7×10^{-11} gr per dscf) (TEQ) corrected to seven percent oxygen, when the average of the performance test run average temperatures at the inlet to the particulate matter control device is 204 °C (400 °F) or less.

(2) Contain THC, from the main exhaust of the kiln or in-line kiln/raw mill, in excess of 50 ppmvd as propane, corrected to seven percent oxygen.

§ 63.1344 Operating limits for kilns and in-line kiln/raw mills.

(a) The owner or operator of a kiln subject to a D/F emission limitation under § 63.1343 must operate the kiln such that the temperature of the gas at the inlet to the kiln particulate matter control device (PMCD) and alkali bypass PMCD, if applicable, does not exceed the applicable temperature limit specified in paragraph (b) of this section. The owner or operator of an in-line kiln/raw mill subject to a D/F emission limitation under § 63.1343 must operate the in-line kiln/raw mill, such that:

(1) When the raw mill of the in-line kiln/raw mill is operating, the applicable temperature limit for the main in-line kiln/raw mill exhaust, specified in paragraph (b) of this section and established during the performance test when the raw mill was operating is not exceeded.

(2) When the raw mill of the in-line kiln/raw mill is not operating, the applicable temperature limit for the main in-line kiln/raw mill exhaust, specified in paragraph (b) of this section and established during the performance test when the raw mill was not operating, is not exceeded.

(3) If the in-line kiln/raw mill is equipped with an alkali bypass, the applicable temperature limit for the alkali bypass, specified in paragraph (b) of this section and established during the performance test when the raw mill was operating, is not exceeded.

(b) The temperature limit for affected sources meeting the limits of

paragraph (a) of this section or paragraphs (a)(1) through (a)(3) of this section is determined in accordance with § 63.1349(b)(3)(iv).

(c) The owner or operator of an affected source subject to a D/F emission limitation under § 63.1343 that employs carbon injection as an emission control technique must operate the carbon injection system in accordance with paragraphs (c)(1) and (c)(2) of this section.

(1) The three-hour rolling average activated carbon injection rate shall be equal to or greater than the activated carbon injection rate determined in accordance with § 63.1349(b)(3)(vi).

(2) The owner or operator shall either:

(i) Maintain the minimum activated carbon injection carrier gas flow rate, as a three-hour rolling average, based on the manufacturer's specifications. These specifications must be documented in the test plan developed in accordance with § 63.7(c), or

(ii) Maintain the minimum activated carbon injection carrier gas pressure drop, as a three-hour rolling average, based on the manufacturer's specifications. These specifications must be documented in the test plan developed in accordance with § 63.7(c).

(d) Except as provided in paragraph (e) of this section, the owner or operator of an affected source subject to a D/F emission limitation under § 63.1343 that employs carbon injection as an emission control technique must specify and use the brand and type of activated carbon used during the performance test until a subsequent performance test is conducted, unless the site-specific performance test plan contains documentation of key parameters that affect adsorption and the owner or operator establishes limits based on those parameters, and the limits on these parameters are maintained.

(e) The owner or operator of an affected source subject to a D/F emission limitation under § 63.1343 that employs carbon injection as an emission control technique may substitute, at any time, a different brand or type of activated carbon provided that the replacement has equivalent or improved properties compared to the activated carbon specified in the site-specific performance test plan and used in the performance test. The owner or operator must maintain documentation that the substitute activated carbon will provide the same or better level of control as the original activated carbon.

EFFECTIVE DATE NOTE: At 67 FR 16619, Apr. 5, 2002, § 63.1344 was amended by revising paragraph (a)(3) effective July 5, 2002. For the convenience of the user, the revised text is set forth as follows:

§ 63.1344 Operating limits for kilns and in-line kiln/raw mills.

(a) * * *

(3) If the in-line kiln/raw mill is equipped with an alkali bypass, the applicable temperature limit for the alkali bypass specified in paragraph (b) of this section and established during the performance test, with or without the raw mill operating, is not exceeded.

* * * * *

§ 63.1345 Standards for clinker coolers.

(a) No owner or operator of a new or existing clinker cooler at a facility which is a major source subject to the provisions of this subpart shall cause to be discharged into the atmosphere from the clinker cooler any gases which:

(1) Contain particulate matter in excess of 0.050 kg per Mg (0.10 lb per ton) of feed (dry basis) to the kiln.

(2) Exhibit opacity greater than ten percent.

(b) [Reserved]

§ 63.1346 Standards for new and reconstructed raw material dryers.

(a) *Brownfield/major sources.* No owner or operator of a new or reconstructed brownfield raw material dryer at a facility which is a major source subject to this subpart shall cause to be discharged into the atmosphere from the new or reconstructed raw material dryer any gases which exhibit opacity greater than ten percent.

(b) *Greenfield/area sources.* No owner or operator of a greenfield raw material dryer at a facility which is an area source subject to this subpart shall cause to be discharged into the atmosphere from the greenfield raw material dryer any gases which contain THC in

excess of 50 ppmvd, reported as propane, corrected to seven percent oxygen.

(c) *Greenfield/major sources.* No owner or operator of a greenfield raw material dryer at a facility which is a major source subject to this subpart shall cause to be discharged into the atmosphere from the greenfield raw material dryer any gases which:

(1) Contain THC in excess of 50 ppmvd, reported as propane, corrected to seven percent oxygen.

(2) Exhibit opacity greater than ten percent.

§ 63.1347 Standards for raw and finish mills.

The owner or operator of each new or existing raw mill or finish mill at a facility which is a major source subject to the provisions of this subpart shall not cause to be discharged from the mill sweep or air separator air pollution control devices of these affected sources any gases which exhibit opacity in excess of ten percent.

§ 63.1348 Standards for affected sources other than kilns; in-line kiln/raw mills; clinker coolers; new and reconstructed raw material dryers; and raw and finish mills.

The owner or operator of each new or existing raw material, clinker, or finished product storage bin; conveying system transfer point; bagging system; and bulk loading or unloading system; and each existing raw material dryer, at a facility which is a major source subject to the provisions of this subpart shall not cause to be discharged any gases from these affected sources which exhibit opacity in excess of ten percent.

MONITORING AND COMPLIANCE PROVISIONS

§ 63.1349 Performance testing requirements.

(a) The owner or operator of an affected source subject to this subpart shall demonstrate initial compliance with the emission limits of § 63.1343 and §§ 63.1345 through 63.1348 using the test methods and procedures in paragraph (b) of this section and § 63.7. Performance test results shall be documented in complete test reports that contain the information required by paragraphs (a)(1) through (a)(10) of this section, as well as all other relevant information. The plan to be followed during testing shall be made available to the Administrator prior to testing, if requested.

(1) A brief description of the process and the air pollution control system;

(2) Sampling location description(s);

(3) A description of sampling and analytical procedures and any modifications to standard procedures;

(4) Test results;

(5) Quality assurance procedures and results;

(6) Records of operating conditions during the test, preparation of standards, and calibration procedures;

(7) Raw data sheets for field sampling and field and laboratory analyses;

(8) Documentation of calculations;

(9) All data recorded and used to establish parameters for compliance monitoring; and

(10) Any other information required by the test method.

(b) Performance tests to demonstrate initial compliance with this subpart shall be conducted as specified in paragraphs (b)(1) through (b)(4) of this section.

(1) The owner or operator of a kiln subject to limitations on particulate matter emissions shall demonstrate initial compliance by conducting a performance test as specified in paragraphs (b)(1)(i) through (b)(1)(iv) of this section. The owner or operator of an in-line kiln/raw mill subject to limitations on particulate matter emissions shall demonstrate initial compliance by conducting separate performance tests as specified in paragraphs (b)(1)(i) through (b)(1)(iv) of this section while the raw mill of the in-line kiln/raw mill is under normal operating conditions and while the raw mill of the in-line kiln/raw mill is not operating. The owner or operator of a clinker cooler subject to limitations on particulate matter emissions shall demonstrate initial compliance by conducting a performance test as specified in paragraphs (b)(1)(i) through (b)(1)(iii) of this section. The opacity exhibited during the period of the Method 5 of Appendix A to part 60 of this chapter performance tests required by paragraph

(b)(1)(i) of this section shall be determined as required in paragraphs (b)(1)(v) through (vi) of this section.

(i) EPA Method 5 of appendix A to part 60 of this chapter shall be used to determine PM emissions. Each performance test shall consist of three separate runs under the conditions that exist when the affected source is operating at the highest load or capacity level reasonably expected to occur. Each run shall be conducted for at least one hour, and the minimum sample volume shall be 0.85 dscm (30 dscf). The average of the three runs shall be used to determine compliance. A determination of the particulate matter collected in the impingers (''back half'') of the Method 5 particulate sampling train is not required to demonstrate initial compliance with the PM standards of this subpart. However this shall not preclude the permitting authority from requiring a determination of the ''back half'' for other purposes.

(ii) Suitable methods shall be used to determine the kiln or inline kiln/raw mill feed rate, except for fuels, for each run.

(iii) The emission rate, E, of PM shall be computed for each run using equation 1:

$$E = \left(C_s Q_{sd}\right)/P \qquad \text{(Eq. 1)}$$

Where:

E = emission rate of particulate matter, kg/Mg of kiln feed.

c_s = concentration of PM, kg/dscm.

Q_{sd} = volumetric flow rate of effluent gas, dscm/hr.

P = total kiln feed (dry basis), Mg/hr.

(iv) When there is an alkali bypass associated with a kiln or in-line kiln/raw mill, the main exhaust and alkali bypass of the kiln or in-line kiln/raw mill shall be tested simultaneously and the combined emission rate of particulate matter from the kiln or in-line kiln/raw mill and alkali bypass shall be computed for each run using equation 2,

$$E_c = \left(C_{sk} Q_{sdk} + C_{sb} Q_{sdb}\right)/P \qquad \text{(Eq. 2)}$$

Where:

E_c = the combined emission rate of particulate matter from the kiln or in-line kiln/raw mill and bypass stack, kg/Mg of kiln feed.

c_{sk} = concentration of particulate matter in the kiln or in-line kiln/raw mill effluent, kg/dscm.

Q_{sdk} = volumetric flow rate of kiln or in-line kiln/raw mill effluent, dscm/hr.

c_{sb} = concentration of particulate matter in the alkali bypass gas, kg/dscm.

Q_{sdb} = volumetric flow rate of alkali bypass gas, dscm/hr.

P=total kiln feed (dry basis), Mg/hr.

(v) Except as provided in paragraph (b)(1)(vi) of this section the opacity exhibited during the period of the Method 5 performance tests required by paragraph (b)(1)(i) of this section shall be determined through the use of a continuous opacity monitor (COM). The maximum six-minute average opacity during the three Method 5 test runs shall be determined during each Method 5 test run, and used to demonstrate initial compliance with the applicable opacity limits of § 63.1343(b)(2), § 63.1343(c)(2), or § 63.1345(a)(2).

(vi) Each owner or operator of a kiln, in-line kiln/raw mill, or clinker cooler subject to the provisions of this subpart using a fabric filter with multiple stacks or an electrostatic precipitator with multiple stacks may, in lieu of installing the continuous opacity monitoring system required by paragraph (b)(1)(v) of this section, conduct an opacity test in accordance with Method 9 of appendix A to part 60 of this chapter during each Method 5 performance test required by paragraph (b)(1)(i) of this section. If the control device exhausts through a monovent, or if the use of a COM in accordance with the installation specifications of Performance Specification 1 (PS–1) of appendix B to part 60 of this chapter is not feasible, a test shall be conducted in accordance with Method 9 of appendix A to part 60 of this chapter during each Method 5 performance test required by paragraph (b)(1)(i) of this section. The maximum six-minute average opacity shall be determined during the three Method 5 test runs, and used to demonstrate initial compliance with the applicable opacity limits of § 63.1343(b)(2), § 63.1343(c)(2), or § 63.1345(a)(2).

(2) The owner or operator of any affected source subject to limitations on opacity under this subpart that is not

subject to paragraph (b)(1) of this section shall demonstrate initial compliance with the affected source opacity limit by conducting a test in accordance with Method 9 of appendix A to part 60 of this chapter. The performance test shall be conducted under the conditions that exist when the affected source is operating at the highest load or capacity level reasonably expected to occur. The maximum six-minute average opacity exhibited during the test period shall be used to determine whether the affected source is in initial compliance with the standard. The duration of the Method 9 performance test shall be 3-hours (30 6-minute averages), except that the duration of the Method 9 performance test may be reduced to 1-hour if the conditions of paragraphs (b)(2)(i) through (ii) of the section apply:

(i) There are no individual readings greater than 10 percent opacity;

(ii) There are no more than three readings of 10 percent for the first 1-hour period.

(3) The owner or operator of an affected source subject to limitations on D/F emissions shall demonstrate initial compliance with the D/F emission limit by conducting a performance test using Method 23 of appendix A to part 60 of this chapter. The owner or operator of an in-line kiln/raw mill shall demonstrate initial compliance by conducting separate performance tests while the raw mill of the in-line kiln/raw mill is under normal operating conditions and while the raw mill of the in-line kiln/raw mill is not operating. The owner or operator of a kiln or in-line kiln/raw mill equipped with an alkali bypass shall conduct simultaneous performance tests of the kiln or in-line kiln/raw mill exhaust and the alkali bypass, however the owner or operator of an in-line kiln/raw mill is not required to conduct a performance test of the alkali bypass exhaust when the raw mill of the in-line kiln/raw mill is not operating.

(i) Each performance test shall consist of three separate runs; each run shall be conducted under the conditions that exist when the affected source is operating at the highest load or capacity level reasonably expected to occur. The duration of each run shall be at least three hours and the sample volume for each run shall be at least 2.5 dscm (90 dscf). The concentration shall be determined for each run and the arithmetic average of the concentrations measured for the three runs shall be calculated and used to determine compliance.

(ii) The temperature at the inlet to the kiln or in-line kiln/raw mill PMCD, and where applicable, the temperature at the inlet to the alkali bypass PMCD, must be continuously recorded during the period of the Method 23 test, and the continuous temperature record(s) must be included in the performance test report.

(iii) One-minute average temperatures must be calculated for each minute of each run of the test.

(iv) The run average temperature must be calculated for each run, and the average of the run average temperatures must be determined and included in the performance test report and will determine the applicable temperature limit in accordance with §63.1344(b).

(v) If activated carbon injection is used for D/F control, the rate of activated carbon injection to the kiln or in-line kiln/raw mill exhaust, and where applicable, the rate of activated carbon injection to the alkali bypass exhaust, must be continuously recorded during the period of the Method 23 test, and the continuous injection rate record(s) must be included in the performance test report. In addition, the performance test report must include the brand and type of activated carbon used during the performance test and a continuous record of either the carrier gas flow rate or the carrier gas pressure drop for the duration of the test. Activated carbon injection rate parameters must be determined in accordance with paragraphs (b)(3)(vi) of this section.

(vi) The run average injection rate must be calculated for each run, and the average of the run average injection rates must be determined and included in the performance test report and will determine the applicable injection rate limit in accordance with §63.1344(c)(1).

(4) The owner or operator of an affected source subject to limitations on

emissions of THC shall demonstrate initial compliance with the THC limit by operating a continuous emission monitor in accordance with Performance Specification 8A of appendix B to part 60 of this chapter. The duration of the performance test shall be three hours, and the average THC concentration (as calculated from the one-minute averages) during the three hour performance test shall be calculated. The owner or operator of an in-line kiln/raw mill shall demonstrate initial compliance by conducting separate performance tests while the raw mill of the in-line kiln/raw mill is under normal operating conditions and while the raw mill of the in-line kiln/raw mill is not operating.

(c) Except as provided in paragraph (e) of this section, performance tests required under paragraphs (b)(1) and (b)(2) of this section shall be repeated every five years, except that the owner or operator of a kiln, in-line kiln/raw mill or clinker cooler is not required to repeat the initial performance test of opacity for the kiln, in-line kiln/raw mill or clinker cooler.

(d) Performance tests required under paragraph (b)(3) of this section shall be repeated every 30 months.

(e) The owner or operator is required to repeat the performance tests for kilns or in-line kiln/raw mills as specified in paragraphs (b)(1) and (b)(3) of this section within 90 days of initiating any significant change in the feed or fuel from that used in the previous performance test.

(f) Table 1 of this section provides a summary of the performance test requirements of this subpart.

TABLE 1 TO § 63.1349.—SUMMARY OF PERFORMANCE TEST REQUIREMENTS

Affected source and pollutant	Performance test
New and existing kiln and in-line kiln/raw mill [b c] PM	EPA Method 5.[a]
New and existing kiln and in-line kiln/raw mill [b c] Opacity	COM if feasible [d e] or EPA Method 9 visual opacity readings.
New and existing kiln and in-line kiln/raw mill [b c f g] D/F	EPA Method 23[h].
New greenfield kiln and in-line kiln/raw mill [c] THC	THC CEM (EPA PS–8A) [i].
New and existing clinker cooler PM	EPA Method 5 [a].
New and existing clinker cooler opacity	COM [d,j] or EPA Method 9 visual opacity readings.
New and existing raw and finish mill opacity	EPA Method 9.[a j]
New and existing raw material dryer and materials handling processes (raw material storage, clinker storage, finished product storage, conveyor transfer points, bagging, and bulk loading and unloading systems) opacity.	EPA Method 9.[a j]
New greenfield raw material dryer THC	THC CEM (EPA PS–8A).[i]

[a] Required initially and every 5 years thereafter.
[b] Includes main exhaust and alkali bypass.
[c] In-line kiln/raw mill to be tested with and without raw mill in operation.
[d] Must meet COM performance specification criteria. If the fabric filter or electrostatic precipitator has multiple stacks, daily EPA Method 9 visual opacity readings may be taken instead of using a COM.
[e] Opacity limit is 20 percent.
[f] Alkali bypass is tested with the raw mill on.
[g] Temperature and (if applicable) activated carbon injection parameters determined separately with and without the raw mill operating.
[h] Required initially and every 30 months thereafter.
[i] EPA Performance Specification (PS)–8A of appendix B to 40 CFR part 60.
[j] Opacity limit is 10 percent.

EFFECTIVE DATE NOTE: At 67 FR 16619, Apr. 5, 2002, § 63.1349 was amended by by revising paragraphs (b)(1)(i), (b)(2), (b)(3), (b)(3)(i), (e), and Table 1, effective July 5, 2002. For the convenience of the user, the revised text is set forth as follows:

§ 63.1349 Performance testing requirements.

* * * * *

(b) * * *

(1) * * *

(i) Method 5 of appendix A to part 60 of this chapter shall be used to determine PM emissions. Each performance test shall consist of three separate runs under the conditions that exist when the affected source is operating at the representative performance conditions in accordance with § 63.7(e). Each run shall be conducted for at least 1 hour, and the minimum sample volume shall be 0.85 dscm (30 dscf). The average of the three runs shall be used to determine compliance. A determination of the PM collected in the impingers (''back half'') of the Method 5 particulate sampling train is dnot required to

demonstrate initial compliance with dd from requiring a determindation of the ''back half'' for other purposes.

* * * * *d

(2) The owner or operator of any affected source subject to limitations on opacity under this subpart that is not subject to paragraph (b)(1) of this section shall demonstrate initial compliance with the affected source opacity limit by conducting a test in accordance with Method 9 of appendix A to part 60 of this chapter. The performance test shall be conducted under the conditions that exist when the affected source is operating at the representative performance conditions in accordance with § 63.7(e). The maximum 6-minute average opacity exhibited during the test period shall be used to determine whether the affected source is in initial compliance with the standard. The duration of the Method 9 performance test shall be 3 hours (30 6-minute averages), except that the duration of the Method 9 performance test may be reduced to 1 hour if the conditions of paragraphs (b)(2)(i) through (ii) of this section apply:

* * * * *

(3) The owner or operator of an affected source subject to limitations on D/F emissions under this subpart shall demonstrate initial compliance with the D/F emission limit by conducting a performance test using Method 23 of appendix A to part 60 of this chapter. The owner or operator of an in-line kiln/raw mill shall demonstrate initial compliance by conducting separate performance tests while the raw mill of the in-line kiln/raw mill is under normal operating conditions and while the raw mill of the in-line kiln/raw mill is not operating. The owner or operator of a kiln or in-line kiln/raw mill equipped with an alkali bypass shall conduct simultaneous performance tests of the kiln or in-line kiln/raw mill exhaust and the alkali bypass. However, the owner or operator of an in-line kiln/raw mill may conduct a performance test of the alkali bypass exhaust when the raw mill of the in-line kiln/raw mill is operating or not operating.

(i) Each performance test shall consist of three separate runs; each run shall be conducted under the conditions that exist when the affected source is operating at the representative performance conditions in accordance with § 63.7(e). The duration of each run shall be at least 3 hours, and the sample volume for each run shall be at least 2.5 dscm (90 dscf). The concentration shall be determined for each run, and the arithmetic average of the concentrations measured for the three runs shall be calculated and used to determine compliance.

* * * * *

(e)(1) If a source plans to undertake a change in operations that may adversely affect compliance with an applicable D/F standard under this subpart, the source must conduct a performance test and establish new temperature limit(s) as specified in paragraph (b)(3) of this section.

(2) If a source plans to undertake a change in operations that may adversely affect compliance with an applicable PM standard under § 63.1343, the source must conduct a performance test as specified in paragraph (b)(1) of this section.

(3) In preparation for and while conducting a performance test required in paragraph (e)(1) of this section, a source may operate under the planned operational change conditions for a period not to exceed 360 hours, provided that the conditions in paragraphs (e)(3)(i) through (iv) of this section are met. The source shall submit temperature and other monitoring data that are recorded during the pretest operations.

(i) The source must provide the Administrator written notice at least 60 days prior to undertaking an operational change that may adversely affect compliance with an applicable standard under this subpart, or as soon as practicable where 60 days advance notice is not feasible. Notice provided under this paragraph shall include a description of the planned change, the emissions standards that may be affected by the change, and a schedule for completion of the performance test required under paragraph (e)(1) of this section, including when the planned operational change period would begin.

(ii) The performance test results must be documented in a test report according to paragraph (a) of this section.

(iii) A test plan must be made available to the Administrator prior to testing, if requested.

(iv) The performance test must be conducted, and it must be completed within 360 hours after the planned operational change period begins.

* * * * *

TABLE 1 TO § 63.1349.—SUMMARY OF PERFORMANCE TEST REQUIREMENTS

Affected source and pollutant	Performance test
New and existing kiln and in-line kiln/raw mil[b c] PM	EPA Method 5[a].
New and existing kiln and in-line kiln/raw mill[b c] Opacity	COM if feasible[d e] or EPA Method 9 visual opacity readings.

TABLE 1 TO § 63.1349.—SUMMARY OF PERFORMANCE TEST REQUIREMENTS—Continued

Affected source and pollutant	Performance test
New and existing kiln and in-line kiln/raw mill [b c f g] D/F	EPA Method 23 [h].
New greenfield kiln and in-line kiln/raw mill [c] THC	THC CEM (EPA PS–8A) [i].
New and existing clinker cooler PM	EPA Method 5 [a].
New and existing clinker cooler opacity	COM [d j] or EPA Method 9 visual opacity readings.
New and existing raw and finish mill opacity	EPA Method 9 [a j].
New and existing raw material dryer and materials handling processes (raw material storage, clinker storage, finished product storage, conveyor transfer points, bagging, and bulk loading and unloading systems) opacity.	EPA Method 9 [a j].
New greenfield raw material dryer THC	THC CEM (EPA PS–8A) [i].

[a] Required initially and every 5 years thereafter.
[b] Includes main exhaust and alkali bypass.
[c] In-line kiln/raw mill to be tested with and without raw mill in operation.
[d] Must meet COM performance specification criteria. If the fabric filter or electrostatic precipitator has multiple stacks, daily EPA Method 9 visual opacity readings may be taken instead of using a COM.
[e] Opacity limit is 20 percent.
[f] Alkali bypass is tested with the raw mill operating or not operating.
[g] Temperature and (if applicable) activated carbon injection parameters determined separately with and without the raw mill operating.
[h] Required initially and every 30 months thereafter.
[i] EPA Performance Specification (PS)–8A of appendix B to part 60 of this chapter.
[j] Opacity limit is 10 percent.

§ 63.1350 Monitoring requirements.

(a) The owner or operator of each portland cement plant shall prepare for each affected source subject to the provisions of this subpart, a written operations and maintenance plan. The plan shall be submitted to the Administrator for review and approval as part of the application for a part 70 permit and shall include the following information:

(1) Procedures for proper operation and maintenance of the affected source and air pollution control devices in order to meet the emission limits and operating limits of §§ 63.1343 through 63.1348;

(2) Corrective actions to be taken when required by paragraph (e) of this section;

(3) Procedures to be used during an inspection of the components of the combustion system of each kiln and each in-line kiln raw mill located at the facility at least once per year; and

(4) Procedures to be used to periodically monitor affected sources subject to opacity standards under §§ 63.1346 and 63.1348. Such procedures must include the provisions of paragraphs (a)(4)(i) through (a)(4)(iv) of this section.

(i) The owner or operator must conduct a monthly 1-minute visible emissions test of each affected source in accordance with Method 22 of Appendix A to part 60 of this chapter. The test must be conducted while the affected source is in operation.

(ii) If no visible emissions are observed in six consecutive monthly tests for any affected source, the owner or operator may decrease the frequency of testing from monthly to semi-annually for that affected source. If visible emissions are observed during any semi-annual test, the owner or operator must resume testing of that affected source on a monthly basis and maintain that schedule until no visible emissions are observed in six consecutive monthly tests.

(iii) If no visible emissions are observed during the semi-annual test for any affected source, the owner or operator may decrease the frequency of testing from semi-annually to annually for that affected source. If visible emissions are observed during any annual test, the owner or operator must resume testing of that affected source on a monthly basis and maintain that schedule until no visible emissions are observed in six consecutive monthly tests.

(iv) If visible emissions are observed during any Method 22 test, the owner or operator must conduct a 6-minute test of opacity in accordance with Method 9 of appendix A to part 60 of this chapter. The Method 9 test must begin within one hour of any observation of visible emissions.

(b) Failure to comply with any provision of the operations and maintenance

plan developed in accordance with paragraph (a) of this section shall be a violation of the standard.

(c) The owner or operator of a kiln or in-line kiln/raw mill shall monitor opacity at each point where emissions are vented from these affected sources including alkali bypasses in accordance with paragraphs (c)(1) through (c)(3) of this section.

(1) Except as provided in paragraph (c)(2) of this section, the owner or operator shall install, calibrate, maintain, and continuously operate a continuous opacity monitor (COM) located at the outlet of the PM control device to continuously monitor the opacity. The COM shall be installed, maintained, calibrated, and operated as required by subpart A, general provisions of this part, and according to PS–1 of appendix B to part 60 of this chapter.

(2) The owner or operator of a kiln or in-line kiln/raw mill subject to the provisions of this subpart using a fabric filter with multiple stacks or an electrostatic precipitator with multiple stacks may, in lieu of installing the continuous opacity monitoring system required by paragraph (c)(1) of this section, monitor opacity in accordance with paragraphs (c)(2)(i) through (ii) of this section. If the control device exhausts through a monovent, or if the use of a COM in accordance with the installation specifications of PS–1 of appendix B to part 60 of this chapter is not feasible, the owner or operator must monitor opacity in accordance with paragraphs (c)(2)(i) through (ii) of this section.

(i) Perform daily visual opacity observations of each stack in accordance with the procedures of Method 9 of appendix A of part 60 of this chapter. The Method 9 test shall be conducted while the affected source is operating at the highest load or capacity level reasonably expected to occur within the day. The duration of the Method 9 test shall be at least 30 minutes each day.

(ii) Use the Method 9 procedures to monitor and record the average opacity for each six-minute period during the test.

(3) To remain in compliance, the opacity must be maintained such that the 6-minute average opacity for any 6-minute block period does not exceed 20 percent. If the average opacity for any 6-minute block period exceeds 20 percent, this shall constitute a violation of the standard.

(d) The owner or operator of a clinker cooler shall monitor opacity at each point where emissions are vented from the clinker cooler in accordance with paragraphs (d)(1) through (d)(3) of this section.

(1) Except as provided in paragraph (d)(2) of this section, the owner or operator shall install, calibrate, maintain, and continuously operate a COM located at the outlet of the clinker cooler PM control device to continuously monitor the opacity. The COM shall be installed, maintained, calibrated, and operated as required by subpart A, general provisions of this part, and according to PS–1 of appendix B to part 60 of this chapter.

(2) The owner or operator of a clinker cooler subject to the provisions of this subpart using a fabric filter with multiple stacks or an electrostatic precipitator with multiple stacks may, in lieu of installing the continuous opacity monitoring system required by paragraph (d)(1) of this section, monitor opacity in accordance with paragraphs (d)(2)(i) through (ii) of this section. If the control device exhausts through a monovent, or if the use of a COM in accordance with the installation specifications of PS–1 of appendix B to part 60 of this chapter is not feasible, the owner or operator must monitor opacity in accordance with paragraphs (d)(2)(i) through (ii) of this section.

(i) Perform daily visual opacity observations of each stack in accordance with the procedures of Method 9 of appendix A of part 60 of this chapter. The Method 9 test shall be conducted while the affected source is operating at the highest load or capacity level reasonably expected to occur within the day. The duration of the Method 9 test shall be at least 30 minutes each day.

(ii) Use the Method 9 procedures to monitor and record the average opacity for each six-minute period during the test.

(3) To remain in compliance, the opacity must be maintained such that the 6-minute average opacity for any 6-minute block period does not exceed 10 percent. If the average opacity for any

6-minute block period exceeds 10 percent, this shall constitute a violation of the standard.

(e) The owner or operator of a raw mill or finish mill shall monitor opacity by conducting daily visual emissions observations of the mill sweep and air separator PMCDs of these affected sources, in accordance with the procedures of Method 22 of appendix A of part 60 of this chapter. The Method 22 test shall be conducted while the affected source is operating at the highest load or capacity level reasonably expected to occur within the day. The duration of the Method 22 test shall be six minutes. If visible emissions are observed during any Method 22 visible emissions test, the owner or operator must:

(1) Initiate, within one-hour, the corrective actions specified in the site specific operating and maintenance plan developed in accordance with paragraphs (a)(1) and (a)(2) of this section; and

(2) Within 24 hours of the end of the Method 22 test in which visible emissions were observed, conduct a visual opacity test of each stack from which visible emissions were observed in accordance with Method 9 of appendix A of part 60 of this chapter. The duration of the Method 9 test shall be thirty minutes.

(f) The owner or operator of an affected source subject to a limitation on D/F emissions shall monitor D/F emissions in accordance with paragraphs (f)(1) through (f)(6) of this section.

(1) The owner or operator shall install, calibrate, maintain, and continuously operate a continuous monitor to record the temperature of the exhaust gases from the kiln, in-line kiln/raw mill and alkali bypass, if applicable, at the inlet to, or upstream of, the kiln, in-line kiln/raw mill and/or alkali bypass PM control devices.

(i) The recorder response range must include zero and 1.5 times either of the average temperatures established according to the requirements in § 63.1349(b)(3)(iv).

(ii) The reference method must be a National Institute of Standards and Technology calibrated reference thermocouple-potentiometer system or alternate reference, subject to approval by the Administrator.

(2) The owner or operator shall monitor and continuously record the temperature of the exhaust gases from the kiln, in-line kiln/raw mill and alkali bypass, if applicable, at the inlet to the kiln, in-line kiln/raw mill and/or alkali bypass PMCD.

(3) The three-hour rolling average temperature shall be calculated as the average of 180 successive one-minute average temperatures.

(4) Periods of time when one-minute averages are not available shall be ignored when calculating three-hour rolling averages. When one-minute averages become available, the first one-minute average is added to the previous 179 values to calculate the three-hour rolling average.

(5) When the operating status of the raw mill of the in-line kiln/raw mill is changed from off to on, or from on to off the calculation of the three-hour rolling average temperature must begin anew, without considering previous recordings.

(6) The calibration of all thermocouples and other temperature sensors shall be verified at least once every three months.

(g) The owner or operator of an affected source subject to a limitation on D/F emissions that employs carbon injection as an emission control technique shall comply with the monitoring requirements of paragraphs (f)(1) through (f)(6) and (g)(1) through (g)(6) of this section to demonstrate continuous compliance with the D/F emission standard.

(1) Install, operate, calibrate and maintain a continuous monitor to record the rate of activated carbon injection. The accuracy of the rate measurement device must be ±1 percent of the rate being measured.

(2) Verify the calibration of the device at least once every three months.

(3) The three-hour rolling average activated carbon injection rate shall be calculated as the average of 180 successive one-minute average activated carbon injection rates.

(4) Periods of time when one-minute averages are not available shall be ignored when calculating three-hour rolling averages. When one-minute averages become available, the first one-minute average is added to the previous 179 values to calculate the three-hour rolling average.

(5) When the operating status of the raw mill of the in-line kiln/raw mill is changed from off to on, or from on to off the calculation of the three-hour rolling average activated carbon injection rate must begin anew, without considering previous recordings.

(6) The owner or operator must install, operate, calibrate and maintain a continuous monitor to record the activated carbon injection system carrier gas parameter (either the carrier gas flow rate or the carrier gas pressure drop) established during the D/F performance test in accordance with paragraphs (g)(6)(i) through (g)(6)(iii) of this section.

(i) The owner or operator shall install, calibrate, operate and maintain a device to continuously monitor and record the parameter value.

(ii) The owner or operator must calculate and record three-hour rolling averages of the parameter value.

(iii) Periods of time when one-minute averages are not available shall be ignored when calculating three-hour rolling averages. When one-minute averages become available, the first one-minute average shall be added to the previous 179 values to calculate the three-hour rolling average.

(h) The owner or operator of an affected source subject to a limitation on THC emissions under this subpart shall comply with the monitoring requirements of paragraphs (h)(1) through (h)(3) of this section to demonstrate continuous compliance with the THC emission standard:

(1) The owner or operator shall install, operate and maintain a THC continuous emission monitoring system in accordance with Performance Specification 8A, of appendix B to part 60 of this chapter and comply with all of the requirements for continuous monitoring systems found in the general provisions, subpart A of this part.

(2) The owner or operator is not required to calculate hourly rolling averages in accordance with section 4.9 of Performance Specification 8A.

(3) Any thirty-day block average THC concentration in any gas discharged from a greenfield raw material dryer, the main exhaust of a greenfield kiln, or the main exhaust of a greenfield in-line kiln/raw mill, exceeding 50 ppmvd, reported as propane, corrected to seven percent oxygen, is a violation of the standard.

(i) The owner or operator of any kiln or in-line kiln/raw mill subject to a D/F emission limit under this subpart shall conduct an inspection of the components of the combustion system of each kiln or in-line kiln raw mill at least once per year.

(j) The owner or operator of an affected source subject to a limitation on opacity under §63.1346 or §63.1348 shall monitor opacity in accordance with the operation and maintenance plan developed in accordance with paragraph (a) of this section.

(k) The owner or operator of an affected source subject to a particulate matter standard under §63.1343 shall install, calibrate, maintain, and operate a particulate matter continuous emission monitoring system (PM CEMS) to measure the particulate matter discharged to the atmosphere. All requirements relating to installation, calibration, maintenance, operation or performance of the PM CEMS and implementation of the PM CEMS requirement are deferred pending further rulemaking.

(l) An owner or operator may submit an application to the Administrator for approval of alternate monitoring requirements to demonstrate compliance with the emission standards of this subpart, except for emission standards for THC, subject to the provisions of paragraphs (l)(1) through (l)(6) of this section.

(1) The Administrator will not approve averaging periods other than those specified in this section, unless the owner or operator documents, using data or information, that the longer averaging period will ensure that emissions do not exceed levels achieved during the performance test over any increment of time equivalent to the time required to conduct three runs of the performance test.

(2) If the application to use an alternate monitoring requirement is approved, the owner or operator must continue to use the original monitoring requirement until approval is received to use another monitoring requirement.

(3) The owner or operator shall submit the application for approval of alternate monitoring requirements no later than the notification of performance test. The application must contain the information specified in paragraphs (l)(3)(i) through (l)(3)(iii) of this section:

(i) Data or information justifying the request, such as the technical or economic infeasibility, or the impracticality of using the required approach;

(ii) A description of the proposed alternative monitoring requirement, including the operating parameter to be monitored, the monitoring approach and technique, the averaging period for the limit, and how the limit is to be calculated; and

(iii) Data or information documenting that the alternative monitoring requirement would provide equivalent or better assurance of compliance with the relevant emission standard.

(4) The Administrator will notify the owner or operator of the approval or denial of the application within 90 calendar days after receipt of the original request, or within 60 calendar days of the receipt of any supplementary information, whichever is later. The Administrator will not approve an alternate monitoring application unless it would provide equivalent or better assurance of compliance with the relevant emission standard. Before disapproving any alternate monitoring application, the Administrator will provide:

(i) Notice of the information and findings upon which the intended disapproval is based; and

(ii) Notice of opportunity for the owner or operator to present additional supporting information before final action is taken on the application. This notice will specify how much additional time is allowed for the owner or operator to provide additional supporting information.

(5) The owner or operator is responsible for submitting any supporting information in a timely manner to enable the Administrator to consider the application prior to the performance test. Neither submittal of an application, nor the Administrator's failure to approve or disapprove the application relieves the owner or operator of the responsibility to comply with any provision of this subpart.

(6) The Administrator may decide at any time, on a case-by-case basis that additional or alternative operating limits, or alternative approaches to establishing operating limits, are necessary to demonstrate compliance with the emission standards of this subpart.

(m) A summary of the monitoring requirements of this subpart is given in Table 1 to this section.

TABLE 1 TO § 63.1350.—MONITORING REQUIREMENTS

Affected source/pollutant or opacity	Monitor type/operation/process	Monitoring requirements
All affected sources	Operations and maintenance plan	Prepare written plan for all affected sources and control devices.
All kilns and in-line kiln raw mills at major sources (including alkali bypass)/opacity.	Continuous opacity monitor, if applicable	Install, calibrate, maintain and operate in accordance with general provisions and with PS–1.
	Method 9 opacity test, if applicable	Daily test of at least 30-minutes, while kiln is at highest load or capacity level.
Kilns and in-line kiln raw mills at major sources (including alkali bypass)/particulate matter.	Particulate matter continuous emission monitoring system.	Deferred.
Kilns and in-line kiln raw mills at major and area sources (including alkali bypass)/ D/F.	Combustion system inspection	Conduct annual inspection of components of combustion system.
	Continuous temperature monitoring at PMCD inlet.	Install, operate, calibrate and maintain continuous temperature monitoring and recording system; calculate three-hour rolling averages; verify temperature sensor calibration at least quarterly.

TABLE 1 TO §63.1350.—MONITORING REQUIREMENTS—Continued

Affected source/pollutant or opacity	Monitor type/operation/process	Monitoring requirements
Kilns and in-line kiln raw mills at major and area sources (including alkali bypass)/ D/F (continued).	Activated carbon injection rate monitor, if applicable.	Install, operate, calibrate and maintain continuous activated carbon injection rate monitor; calculate three-hour rolling averages; verify calibration at least quarterly; install, operate, calibrate and maintain carrier gas flow rate monitor or carrier gas pressure drop monitor; calculate three-hour rolling averages; document carbon specifications.
New greenfield kilns and in-line kiln raw mills at major and area sources/THC.	Total hydrocarbon continuous emission monitor.	Install, operate, and maintain THC CEM in accordance with PS–8A; calculate 30-day block average THC concentration.
Clinker coolers at major sources/opacity ..	Continuous opacity monitor, if applicable	Install, calibrate, maintain and operate in accordance with general provisions and with PS–1.
	Method 9 opacity test, if applicable	Daily test of at least 30-minutes, while kiln is at highest load or capacity level.
Raw mills and finish mills at major sources/opacity.	Method 22 visible emissions test	Conduct daily 6-minute Method 22 visible emissions test while mill is operating at highest load or capacity level; if visible emissions are observed, initiate corrective action within one hour and conduct 30-minute Method 9 test within 24 hours.
New greenfield raw material dryers at major and area sources/THC.	Total hydrocarbon continuous emission monitor.	Install, operate, and maintain THC CEM in accordance with PS–8A; calculate 30-day block average THC concentration.
Raw material dryers; raw material, clinker, finished product storage bins; conveying system transfer points; bagging systems; and bulk loading and unloading systems at major sources/opacity.	Method 22 visible emissions test	As specified in operation and maintenance plan.

[64 FR 31925, June 14, 1999, as amended at 64 FR 53070, Sept. 30, 1999]

EFFECTIVE DATE NOTE: At 67 FR 16620, Apr. 5, 2002, §63.1350 was amended by adding paragraphs (a)(4)(v) through (a)(4)(vii), revising paragraphs (c)(2)(i), (d)(2)(i), (e) introductory text and (e)(2), redesignating paragraph (m) as paragraph (n) and adding a new paragraph (m); and revising Table 1, effective July 5, 2002. For the convenience of the user the revised and added text is set forth as follows:

§63.1350 Monitoring requirements.

(a) * * *

(4) * * *

(v) The requirement to conduct Method 22 visible emissions monitoring under this paragraph shall not apply to any totally enclosed conveying system transfer point, regardless of the location of the transfer point. ''Totally enclosed conveying system transfer point'' shall mean a conveying system transfer point that is enclosed on all sides, top, and bottom.

(vi) If any partially enclosed or unenclosed conveying system transfer point is located in a building, the owner or operator of the portland cement plant shall have the option to conduct a Method 22 visible emissions monitoring test according to the requirements of paragraphs (a)(4)(i) through (iv) of this section for each such conveying system transfer point located within the building, or for the building itself (according to paragraph (a)(4)(vii) of this section).

(vii) If visible emissions from a building are monitored, the requirements of paragraphs (a)(4)(i) through (iv) of this section apply to the monitoring of the building, and you must also do the following: Test visible emissions from each side, roof and vent of the building for at least 1 minute. The test must be conducted under normal operating conditions.

* * * * *

(c) * * *

(2) * * *

(i) Perform daily visual opacity observations of each stack in accordance with the procedures of Method 9 of appendix A to part 60 of this chapter. The Method 9 test shall be

conducted while the affected source is operating at the representative performance conditions in accordance with § 63.7(e). The duration of the Method 9 test shall be at least 30 minutes each day.

* * * * *

(d) * * *

(2) * * *

(i) Perform daily visual opacity observations of each stack in accordance with the procedures of Method 9 of appendix A to part 60 of this chapter. The Method 9 test shall be conducted while the affected source is operating at the representative performance conditions in accordance with § 63.7(e). The duration of the Method 9 test shall be at least 30 minutes each day.

* * * * *

(e) The owner or operator of a raw mill or finish mill shall monitor opacity by conducting daily visual emissions observations of the mill sweep and air separator PMCD of these affected sources in accordance with the procedures of Method 22 of appendix A to part 60 of this chapter. The Method 22 test shall be conducted while the affected source is operating at the representative performance conditions in accordance with § 63.7(e). The duration of the Method 22 test shall be 6 minutes. If visible emissions are observed during any Method 22 visible emissions test, the owner or operator must:

* * * * *

(2) Within 24 hours of the end of the Method 22 test in which visible emissions were observed, conduct a followup Method 22 test of each stack from which visible emissions were observed during the previous Method 22 test. If visible emissions are observed during the followup Method 22 test from any stack from which visible emissions were observed during the previous Method 22 test, conduct a visual opacity test of each stack from which emissions were observed during the follow up Method 22 test in accordance with Method 9 of appendix A to part 60 of this chapter. The duration of the Method 9 test shall be 30 minutes.

* * * * *

(m) The requirements under paragraph (e) of this section to conduct daily Method 22 testing shall not apply to any specific raw mill or finish mill equipped with a continuous opacity monitor COM or bag leak detection system (BLDS). If the owner or operator chooses to install a COM in lieu of conducting the daily visual emissions testing required under paragraph (e) of this section, then the COM must be installed at the outlet of the PM control device of the raw mill or finish mill, and the COM must be installed, maintained, calibrated, and operated as required by the general provisions in subpart A of this part and according to PS–1 of appendix B to part 60 of this chapter. To remain in compliance, the opacity must be maintained such that the 6-minute average opacity for any 6-minute block period does not exceed 10 percent. If the average opacity for any 6-minute block period exceeds 10 percent, this shall constitute a violation of the standard. If the owner or operator chooses to install a BLDS in lieu of conducting the daily visual emissions testing required under paragraph (e) of this section, the requirements in paragraphs (m)(1) through (9) of this section apply to each BLDS:

(1) The BLDS must be certified by the manufacturer to be capable of detecting PM emissions at concentrations of 10 milligrams per actual cubic meter (0.0044 grains per actual cubic foot) or less. ''Certify'' shall mean that the instrument manufacturer has tested the instrument on gas streams having a range of particle size distributions and confirmed by means of valid filterable PM tests that the minimum detectable concentration limit is at or below 10 milligrams per actual cubic meter (0.0044 grains per actual cubic foot) or less.

(2) The sensor on the BLDS must provide output of relative PM emissions.

(3) The BLDS must have an alarm that will activate automatically when it detects a significant increase in relative PM emissions greater than a preset level.

(4) The presence of an alarm condition should be clearly apparent to facility operating personnel.

(5) For a positive-pressure fabric filter, each compartment or cell must have a bag leak detector. For a negative-pressure or induced-air fabric filter, the bag leak detector must be installed downstream of the fabric filter. If multiple bag leak detectors are required (for either type of fabric filter), detectors may share the system instrumentation and alarm.

(6) All BLDS must be installed, operated, adjusted, and maintained so that they are based on the manufacturer's written specifications and recommendations. The EPA recommends that where appropriate, the standard operating procedures manual for each bag leak detection system include concepts from EPA's ''Fabric Filter Bag Leak Detection Guidance'' (EPA–454/R–98–015, September 1997).

(7) The baseline output of the system must be established as follows:

(i) Adjust the range and the averaging period of the device; and

(ii) Establish the alarm set points and the alarm delay time.

(8) After initial adjustment, the range, averaging period, alarm set points, or alarm

delay time may not be adjusted except as specified in the operations and maintenance plan required by paragraph (a) of this section. In no event may the range be increased by more than 100 percent or decreased by more than 50 percent over a 1 calendar year period unless a responsible official as defined in §63.2 certifies in writing to the Administrator that the fabric filter has been inspected and found to be in good operating condition.

(9) The owner or operator must maintain and operate the fabric filter such that the bag leak detector alarm is not activated and alarm condition does not exist for more than 5 percent of the total operating time in a 6-month block period. Each time the alarm activates, alarm time will be counted as the actual amount of time taken by the owner or operator to initiate corrective actions. If inspection of the fabric filter demonstrates that no corrective actions are necessary, no alarm time will be counted. The owner or operator must continuously record the output from the BLDS during periods of normal operation. Normal operation does not include periods when the BLDS is being maintained or during startup, shutdown or malfunction.

* * * * *

TABLE 1 TO § 63.1350.—MONITORING REQUIREMENTS

Affected source/pollutant or opacity	Monitor type/operation/process	Monitoring requirements
All affected sources	Operations and maintenance plan	Prepare written plan for all affected sources and control devices.
All kilns and in-line kiln raw mills at major sources (including alkali bypass)/opacity.	Continuous opacity monitor, if applicable.	Install, calibrate, maintain and operate in accordance with general provisions and with PS–1.
	Method 9 opacity test, if applicable	Daily test of at least 30-minutes, while kiln is at representative performance conditions.
Kilns and in-line raw mills at major sources (including alkali bypass)/particulate matter.	Particulate matter continuous monitoring systems.	Deferred
Kilns and in-line kiln raw mills at major and area sources (including alkali bypass)/D/F.	Combustion system inspection	Conduct annual inspection of components of combustion system.
	Continuous temperature monitoring at PMCD inlet.	Install, operate, calibrate and maintain continuous temperature monitoring and recording system; calculate three-hour rolling averages; verify temperature sensor calibration at least quarterly.
	Activated carbon injection rate monitor, if applicable.	Install, operate, calibrate and maintain continuous activated carbon injection rate monitor; calculate three-hour rolling averages; verify calibration at least quarterly; install, operate, calibrate and maintain carrier gas flow rate monitor or carrier gas pressure drop monitor; calculate three-hour rolling averages; document carbon specifications.
New greenfield kilns and inline kiln raw mills at major and area sources/THC.	Total hydrocarbon continuous emission monitor.	Install, operate, and maintain THC CEM in accordance with PS–8A; calculate 30-day block average THC concentration.
Clinker coolers at major sources/opacity	Continuous opacity monitor, if applicable.	Install, calibrate, maintain and operate in accordance with general provisions and with PS–1.
	Method 9 opacity test, if applicable	Daily test of at least applicable 30-minutes, while kiln is at representative performance conditions.
Raw mills and finish mills at major sources/opacity	Method 22 visible emissions test	Conduct daily 6-minute Method 22 visible emissions test while mill is operating at representative performance conditions; if visible emissions are observed, initiate corrective action within one hour and conduct follow up Method 22 test. If visible emissions are observed, conduct 30-minute Method 9 test.
New greenfield raw material dryers at major and area sources/THC	Total hydrocarbon continuous emission monitor.	Install, operate, and maintain THC CEM in accordance with PS–8A; calculate 30-day block average THC concentration.
Raw material dryers; raw material, clinker, finished product storage bins; conveying system transfer points, excluding totally enclosed conveying system transfer points; bagging systems; and bulk loading and unloading systems at major sources/opacity.	Method 22 visible emissions test	As specified in operation and maintenance plan.

§ 63.1351 Compliance dates.

(a) The compliance date for an owner or operator of an existing affected source subject to the provisions of this subpart is June 10, 2002.

(b) The compliance date for an owner or operator of an affected source subject to the provisions of this subpart that commences new construction or reconstruction after March 24, 1998 is June 9, 1999 or immediately upon start-up of operations, whichever is later.

EFFECTIVE DATE NOTE: At 67 FR 16622, Apr. 5, 2002, § 63.1351 was amended by revising paragraphs (a) and (b) effective July 5, 2002. For the convenience of the user the revised text is set forth as follows:

§ 63.1351 Compliance dates.

(a) The compliance date for an owner or operator of an existing affected source subject to the provisions of this subpart is June 14, 2002.

(b) The compliance date for an owner or operator of an affected source subject to the provisions of this subpart that commences new construction or reconstruction after March 24, 1998 is June 14, 1999 or upon start-up of operations, whichever is later.

* * * * *

§ 63.1352 Additional test methods.

(a) Owners or operators conducting tests to determine the rates of emission of hydrogen chloride (HCl) from kilns, in-line kiln/raw mills and associated bypass stacks at portland cement manufacturing facilities, for use in applicability determinations under § 63.1340 are permitted to use Method 320 or Method 321 of appendix A of this part.

(b) Owners or operators conducting tests to determine the rates of emission of hydrogen chloride (HCl) from kilns, in-line kiln/raw mills and associated bypass stacks at portland cement manufacturing facilities, for use in applicability determinations under § 63.1340 are permitted to use Methods 26 or 26A of appendix A to part 60 of this chapter, except that the results of these tests shall not be used to establish status as an area source.

(c) Owners or operators conducting tests to determine the rates of emission of specific organic HAP from raw material dryers, kilns and in-line kiln/raw mills at portland cement manufacturing facilities, for use in applicability determinations under § 63.1340 of this subpart are permitted to use Method 320 of appendix A to this part, or Method 18 of appendix A to part 60 of this chapter.

NOTIFICATION, REPORTING AND RECORDKEEPING

§ 63.1353 Notification requirements.

(a) The notification provisions of 40 CFR part 63, subpart A that apply and those that do not apply to owners and operators of affected sources subject to this subpart are listed in Table 1 of this subpart. If any State requires a notice that contains all of the information required in a notification listed in this section, the owner or operator may send the Administrator a copy of the notice sent to the State to satisfy the requirements of this section for that notification.

(b) Each owner or operator subject to the requirements of this subpart shall comply with the notification requirements in § 63.9 as follows:

(1) Initial notifications as required by § 63.9(b) through (d). For the purposes of this subpart, a Title V or 40 CFR part 70 permit application may be used in lieu of the initial notification required under § 63.9(b), provided the same information is contained in the permit application as required by § 63.9(b), and the State to which the permit application has been submitted has an approved operating permit program under part 70 of this chapter and has received delegation of authority from the EPA. Permit applications shall be submitted by the same due dates as those specified for the initial notification.

(2) Notification of performance tests, as required by §§ 63.7 and 63.9(e).

(3) Notification of opacity and visible emission observations required by § 63.1349 in accordance with §§ 63.6(h)(5) and 63.9(f).

(4) Notification, as required by § 63.9(g), of the date that the continuous emission monitor performance evaluation required by § 63.8(e) is scheduled to begin.

(5) Notification of compliance status, as required by § 63.9(h).

§ 63.1354 Reporting requirements.

(a) The reporting provisions of subpart A of this part that apply and those that do not apply to owners or operators of affected sources subject to this subpart are listed in Table 1 of this subpart. If any State requires a report that contains all of the information required in a report listed in this section, the owner or operator may send the Administrator a copy of the report sent to the State to satisfy the requirements of this section for that report.

(b) The owner or operator of an affected source shall comply with the reporting requirements specified in § 63.10 of the general provisions of this part 63, subpart A as follows:

(1) As required by § 63.10(d)(2), the owner or operator shall report the results of performance tests as part of the notification of compliance status.

(2) As required by § 63.10(d)(3), the owner or operator of an affected source shall report the opacity results from tests required by § 63.1349.

(3) As required by § 63.10(d)(4), the owner or operator of an affected source who is required to submit progress reports as a condition of receiving an extension of compliance under § 63.6(i) shall submit such reports by the dates specified in the written extension of compliance.

(4) As required by § 63.10(d)(5), if actions taken by an owner or operator during a startup, shutdown, or malfunction of an affected source (including actions taken to correct a malfunction) are consistent with the procedures specified in the source's startup, shutdown, and malfunction plan specified in § 63.6(e)(3), the owner or operator shall state such information in a semiannual report. Reports shall only be required if a startup, shutdown, or malfunction occurred during the reporting period. The startup, shutdown, and malfunction report may be submitted simultaneously with the excess emissions and continuous monitoring system performance reports; and

(5) Any time an action taken by an owner or operator during a startup, shutdown, or malfunction (including actions taken to correct a malfunction) is not consistent with the procedures in the startup, shutdown, and malfunction plan, the owner or operator shall make an immediate report of the actions taken for that event within 2 working days, by telephone call or facsimile (FAX) transmission. The immediate report shall be followed by a letter, certified by the owner or operator or other responsible official, explaining the circumstances of the event, the reasons for not following the startup, shutdown, and malfunction plan, and whether any excess emissions and/or parameter monitoring exceedances are believed to have occurred.

(6) As required by § 63.10(e)(2), the owner or operator shall submit a written report of the results of the performance evaluation for the continuous monitoring system required by § 63.8(e). The owner or operator shall submit the report simultaneously with the results of the performance test.

(7) As required by § 63.10(e)(2), the owner or operator of an affected source using a continuous opacity monitoring system to determine opacity compliance during any performance test required under § 63.7 and described in § 63.6(d)(6) shall report the results of the continuous opacity monitoring system performance evaluation conducted under § 63.8(e).

(8) As required by § 63.10(e)(3), the owner or operator of an affected source equipped with a continuous emission monitor shall submit an excess emissions and continuous monitoring system performance report for any event when the continuous monitoring system data indicate the source is not in compliance with the applicable emission limitation or operating parameter limit.

(9) The owner or operator shall submit a summary report semiannually which contains the information specified in § 63.10(e)(3)(vi). In addition, the summary report shall include:

(i) All exceedences of maximum control device inlet gas temperature limits specified in § 63.1344(a) and (b);

(ii) All failures to calibrate thermocouples and other temperature sensors as required under § 63.1350(f)(7) of this subpart; and

(iii) All failures to maintain the activated carbon injection rate, and the activated carbon injection carrier gas flow rate or pressure drop, as applicable, as required under § 63.1344(c).

(iv) The results of any combustion system component inspections conducted within the reporting period as required under § 63.1350(i).

(v) All failures to comply with any provision of the operation and maintenance plan developed in accordance with § 63.1350(a).

(10) If the total continuous monitoring system downtime for any CEM or any continuous monitoring system (CMS) for the reporting period is ten percent or greater of the total operating time for the reporting period, the owner or operator shall submit an excess emissions and continuous monitoring system performance report along with the summary report.

§ 63.1355 Recordkeeping requirements.

(a) The owner or operator shall maintain files of all information (including all reports and notifications) required by this section recorded in a form suitable and readily available for inspection and review as required by § 63.10(b)(1). The files shall be retained for at least five years following the date of each occurrence, measurement, maintenance, corrective action, report, or record. At a minimum, the most recent two years of data shall be retained on site. The remaining three years of data may be retained off site. The files may be maintained on microfilm, on a computer, on floppy disks, on magnetic tape, or on microfiche.

(b) The owner or operator shall maintain records for each affected source as required by § 63.10(b)(2) and (b)(3) of this part; and

(1) All documentation supporting initial notifications and notifications of compliance status under § 63.9;

(2) All records of applicability determination, including supporting analyses; and

(3) If the owner or operator has been granted a waiver under § 63.8(f)(6), any information demonstrating whether a source is meeting the requirements for a waiver of recordkeeping or reporting requirements.

(c) In addition to the recordkeeping requirements in paragraph (b) of this section, the owner or operator of an affected source equipped with a continuous monitoring system shall maintain all records required by § 63.10(c).

OTHER

§ 63.1356 Exemption from new source performance standards.

(a) Except as provided in paragraphs (a)(1) and (a)(2) of this section, any affected source subject to the provisions of this subpart is exempted from any otherwise applicable new source performance standard contained in 40 CFR part 60, subpart F.

(1) Kilns and in-line kiln/raw mills, as applicable under 40 CFR 60.60(b), located at area sources are subject to PM and opacity limits and associated reporting and recordkeeping, under 40 CFR part 60, subpart F.

(2) Greenfield raw material dryers, as applicable under 40 CFR 60.60(b), located at area sources are subject to opacity limits and associated reporting and recordkeeping under 40 CFR part 60, subpart F.

EFFECTIVE DATE NOTE: At 67 FR 16622, Apr. 5, 2002, § 63.1356 was amended by revising paragraph (a) and adding paragraph (b) effective July 5, 2002. For the convenience of the user, the added and revised text is set forth as follows:

§ 63.1356 Exemption from new source performance standards.

(a) Except as provided in paragraphs (a)(1) and (2) of this section, any affected source subject to the provisions of this subpart is exempt from any otherwise applicable new source performance standard contained in subpart F or subpart OOO of part 60 of this chapter.

* * * * *

(b) The requirements of subpart Y of part 60 of this chapter, ''Standards of Performance for Coal Preparation Plants,'' do not apply to conveying system transfer points used to convey coal from the mill to the kiln that are associated with coal preparation at a portland cement plant that is a major source under this subpart.

§ 63.1357 Temporary, conditioned exemption from particulate matter and opacity standards.

(a) Subject to the limitations of paragraphs (b) through (f) of this section, an owner or operator conducting PM CEMS correlation tests (that is, correlation with manual stack methods) is exempt from:

(1) Any particulate matter and opacity standards of part 60 or part 63 of

this chapter that are applicable to cement kilns and in-line kiln/raw mills.

(2) Any permit or other emissions or operating parameter or other limitation on workplace practices that are applicable to cement kilns and in-line kiln raw mills to ensure compliance with any particulate matter and opacity standards of this part or part 60 of this chapter.

(b) The owner or operator must develop a PM CEMS correlation test plan. The plan must be submitted to the Administrator for approval at least 90 days before the correlation test is scheduled to be conducted. The plan must include:

(1) The number of test conditions and the number of runs for each test condition;

(2) The target particulate matter emission level for each test condition;

(3) How the operation of the affected source will be modified to attain the desired particulate matter emission rate; and

(4) The anticipated normal particulate matter emission level.

(c) The Administrator will review and approve or disapprove the correlation test plan in accordance with § 63.7(c)(3)(i) and (iii). If the Administrator fails to approve or disapprove the correlation test plan within the time period specified in § 63.7(c)(3)(iii), the plan shall be considered approved, unless the Administrator has requested additional information.

(d) The stack sampling team must be on-site and prepared to perform correlation testing no later than 24 hours after operations are modified to attain the desired particulate matter emissions concentrations, unless the correlation test plan documents that a longer period is appropriate.

(e) The particulate matter and opacity standards and associated operating limits and conditions will not be waived for more than 96 hours, in the aggregate, for a correlation test, including all runs and conditions.

(f) The owner or operator must return the affected source to operating conditions indicative of compliance with the applicable particulate matter and opacity standards as soon as possible after correlation testing is completed.

EFFECTIVE DATE NOTE: At 67 FR 16622, Apr. 5, 2002, § 63.1357 was amended by revising paragraph (e) effective July 5, 2002. For the convenience of the user, the revised text is set forth as follows:

§ 63.1357 Temporary, conditioned exemption from particulate matter and opacity standards.

* * * * *

(e) The PM and opacity standards and associated operating limits and conditions will not be waived for more than 96 hours, in the aggregate, for the purposes of conducting tests to correlate PM CEMS with manual method test results, including all runs and conditions, except as described in this paragraph. Where additional time is required to correlate a PM CEMS device, a source may petition the Administrator for an extension of the 96-hour aggregate waiver of compliance with the PM and opacity standards. An extension of the 96-hour aggregate waiver is renewable at the discretion of the Administrator.

* * * * *

§ 63.1358 Delegation of authority.

(a) In delegating implementation and enforcement authority to a State under subpart E of this part, the authorities contained in paragraph (b) of this section shall be retained by the Administrator and not transferred to a State.

(b) Authority which will not be delegated to States:

(1) Approval of alternative non-opacity emission standards under § 63.6(g).

(2) Approval of alternative opacity standards under § 63.6(h)(9).

(3) Approval of major changes to test methods under §§ 63.7(e)(2)(ii) and 63.7(f). A major change to a test method is a modification to a federally enforceable test method that uses unproven technology or procedures or is an entirely new method (sometimes necessary when the required test method is unsuitable).

(4) Approval of major changes to monitoring under § 63.8(f). A major change to monitoring is a modification to federally enforceable monitoring that uses unproven technology or procedures, is an entirely new method (sometimes necessary when the required monitoring is unsuitable), or is a change in the averaging period.

(5) Waiver of recordkeeping under § 63.10(f).

§ 63.1359 [Reserved]

TABLE 1 TO SUBPART LLL OF PART 63—APPLICABILITY OF GENERAL PROVISIONS

General Provisions 40 CFR Citation	Requirement	Applies to Subpart LLL	Comment
63.1(a)(1) through (4)	Applicability	Yes.	
63.1(a)(5)		No	[Reserved].
63.1(a)(6) through (a)(8)	Applicability	Yes.	
63.1(a)(9)		No	[Reserved].
63.1(a)(10) through (14)	Applicability	Yes.	
63.1(b)(1)	Initial Applicability Determination	No	§ 63.1340 specifies applicability.
63.1(b)(2) and (3)	Initial Applicability Determination	Yes.	
63.1(c)(1)	Applicability After Standard Established.	Yes.	
63.1(c)(2)	Permit Requirements	Yes	Area sources must obtain Title V permits.
63.1(c)(3)		No	[Reserved].
63.1(c)(4) and (5)	Extensions, Notifications	Yes.	
63.1(d)		No	[Reserved].
63.1(e)	Applicability of Permit Program	Yes.	
63.2	Definitions	Yes.	Additional definitions in § 63.1341.
63.3(a) through (c)	Units and Abbreviations	Yes.	
63.4(a)(1) through (a)(3)	Prohibited Activities	Yes.	
63.4(a)(4)		No	[Reserved].
63.4(a)(5)	Compliance date	Yes.	
63.4(b) and (c)	Circumvention, Severability	Yes.	
63.5(a)(1) and (2)	Construction/Reconstruction	Yes.	
63.5(b)(1)	Compliance Dates	Yes.	
63.5(b)(2)		No	[Reserved].
63.5(b)(3) through (6)	Construction Approval, Applicability.	Yes.	
63.5(c)		No	[Reserved].
63.5(d)(1) through (4)	Approval of Construction/Reconstruction.	Yes.	
63.5(e)	Approval of Construction/Reconstruction.	Yes.	
63.5(f)(1) and (2)	Approval of Construction/Reconstruction.	Yes.	
63.6(a)	Compliance for Standards and Maintenance.	Yes.	
63.6(b)(1) through (5)	Compliance Dates	Yes.	
63.6(b)(6)		No	[Reserved].
63.6(b)(7)	Compliance Dates	Yes.	
63.6(c)(1) and (2)	Compliance Dates	Yes.	
63.6(c)(3) and (c)(4)		No	[Reserved].
63.6(c)(5)	Compliance Dates	Yes.	
63.6(d)		No	[Reserved].
63.6(e)(1) and (e)(2)	Operation & Maintenance	Yes.	
63.6(e)(3)	Startup, Shutdown Malfunction Plan.	Yes.	
63.6(f)(1) through (3)	Compliance with Emission Standards.	Yes.	
63.6(g)(1) through (g)(3)	Alternative Standard	Yes.	
63.6(h)(1) and (2)	Opacity/VE Standards	Yes.	
63.6(h)(3)		No	Reserved
63.6(h)(4) and (h)(5)(i)	Opacity/VE Standards	Yes.	
63.6(h)(5)(ii) through (iv)	Opacity/VE Standards	No	Test duration specified in Subpart LLL.
63.6(h)(6)	Opacity/VE Standards	Yes.	
63.6(i)(1) through (i)(14)	Extension of Compliance	Yes.	
63.6(i)(15)		No	[Reserved].
63.6(i)(16)	Extension of Compliance	Yes.	
63.6(j)	Exemption from Compliance	Yes.	
63.7(a)(1) through (a)(3)	Performance Testing Requirements.	Yes	§ 63.1349 has specific requirements.
63.7(b)	Notification	Yes.	
63.7(c)	Quality Assurance/Test Plan	Yes.	
63.7(d)	Testing Facilities	Yes.	
63.7(e)(1) through (4)	Conduct of Tests	Yes.	
63.7(f)	Alternative Test Method	Yes.	
63.7(g)	Data Analysis	Yes.	
63.7(h)	Waiver of Tests	Yes.	
63.8(a)(1)	Monitoring Requirements	Yes.	

General Provisions 40 CFR Citation	Requirement	Applies to Subpart LLL	Comment
63.8(a)(2)	Monitoring	No	§ 63.1350 includes CEM requirements.
63.8(a)(3)		No	[Reserved].
63.8(a)(4)	Monitoring	No	Flares not applicable.
63.8(b)(1) through (3)	Conduct of Monitoring	Yes.	
63.8(c)(1) through (8)	CMS Operation/ Maintenance	Yes.	Performance specification supersedes requirements for THC CEM. Temperature and activated carbon injection monitoring data reduction requirements given in subpart LLL.
63.8(d)	Quality Control	Yes.	
63.8(e)	Performance Evaluation for CMS	Yes	Performance specification supersedes requirements for THC CEM.
63.8(f)(1) through (f)(5)	Alternative Monitoring Method	Yes	Additional requirements in § 1350(l).
63.8(f)(6)	Alternative to RATA Test	Yes.	
63.8(g)	Data Reduction	Yes.	
63.9(a)	Notification Requirements	Yes.	
63.9(b)(1) through (5)	Initial Notifications	Yes.	
63.9(c)	Request for Compliance Extension.	Yes.	
63.9(d)	New Source Notification for Special Compliance Requirements.	Yes.	
63.9(e)	Notification of Performance Test	Yes.	
63.9(f)	Notification of VE/Opacity Test	Yes	Notification not required for VE/opacity test under § 63.1350(e) and (j).
63.9(g)	Additional CMS Notifications	Yes.	
63.9(h)(1) through (h)(3)	Notification of Compliance Status	Yes.	
63.9(h)(4)		No	[Reserved].
63.9(h)(5) and (h)(6)	Notification of Compliance Status	Yes.	
63.9(i)	Adjustment of Deadlines	Yes.	
63.9(j)	Change in Previous Information	Yes.	
63.10(a)	Recordkeeping/Reporting	Yes	Yes.
63.10(b)	General Requirements	Yes.	
63.10(c)(1)	Additional CMS Recordkeeping	Yes	PS–8A applies.
63.10(c)(2) through (c)(4)		No	Reserved]
63.10(c)(5) through (c)(8)	Additional CMS Recordkeeping	Yes	PS–8A applies instead of requirements for THC CEM.
63.10(c)(9)		No	[Reserved]
63.10(c)(10) through (15)	Additional CMS Recordkeeping	Yes	PS–8A applies instead of requirements for THC CEM.
63.10(d)(1)	General Reporting Requirements	Yes.	
63.10(d)(2)	Performance Test Results	Yes.	
63.10(d)(3)	Opacity or VE Observations	Yes.	
63.10(d)(4)	Progress Reports	Yes.	
63.10(d)(5)	Startup, Shutdown, Malfunction Reports.	Yes.	
63.10(e)(1) and (e)(2)	Additional CMS Reports	Yes.	
63.10(e)(3)	Excess Emissions and CMS Performance Reports.	Yes	Exceedences are defined in subpart LLL.
63.10(f)	Waiver for Recordkeeping/ Reporting.	Yes.	
63.11(a) and (b)	Control Device Requirements	No	Flares not applicable.
63.12(a)–(c)	State Authority and Delegations	Yes.	
63.13(a)–(c)	State/Regional Addresses	Yes.	
63.14(a) and (b)	Incorporation by Reference	Yes.	
63.15(a) and (b)	Availability of Information	Yes.	

EFFECTIVE DATE NOTE: At 67 FR 16622, Apr. 5, 2002, Table 1 to Subpart LLL was revised effective July 5, 2002. For the convenience of the user the revised text is set forth as follows:

TABLE 1 TO SUBPART LLL OF PART 63.—APPLICABILITY OF GENERAL PROVISIONS

Citation	Requirement	Applies to Subpart LLL	Explaination
63.1(a)(1)–(4)	Applicability	Yes.	
63.1(a)(5)		No	[Reserved]
63.1(a)(6)–(8)	Applicability	Yes.	
63.1(a)(9)		No	[Reserved]
63.1(a)(10)–(14)	Applicability	Yes.	
63.1(b)(1)	Initial Applicability Determination	No	§ 63.1340 specifies applicability.
63.1(b)(2)–(3)	Initial Applicability Determination	Yes.	
63.1(c)(1)	Applicability After Standard Established	Yes.	
63.1(c)(2)	Permit Requirements	Yes	Area sources must obtain Title V permits.
63.1(c)(3)		No	[Reserved]
63.1(c)(4)–(5)	Extensions, Notifications	Yes.	
63.1(d)		No	[Reserved]
63.1(e)	Applicability of Permit Program	Yes.	
63.2	Definitions	Yes	Additional definitions in § 63.1341.
63.3(a)–(c)	Units and Abbreviations	Yes.	
63.4(a)(1)–(3)	Prohibited Activities	Yes.	
63.4(a)(4)		No	[Reserved]
63.4(a)(5)	Compliance date	Yes.	
63.4(b)–(c)	Circumvention, Severability	Yes.	
63.5(a)(1)–(2)	Construction/Reconstruction	Yes.	
63.5(b)(1)	Compliance Dates	Yes.	
63.5(b)(2)		No	[Reserved]
63.5(b)(3)–(6)	Construction Approval, Applicability	Yes.	
63.5(c)		No	[Reserved]
63.5(d)(1)–(4)	Approval of Construction/Reconstruction	Yes.	
63.5(e)	Approval of Construction/Reconstruction	Yes.	
63.5(f)(1)–(2)	Approval of Construction/Reconstruction	Yes.	
63.6(a)	Compliance for Standards and Maintenance	Yes.	
63.6(b)(1)–(5)	Compliance Dates	Yes.	
63.6(b)(6)		No	[Reserved]
63.6(b)(7)	Compliance Dates	Yes.	
63.6(c)(1)–(2)	Compliance Dates	Yes.	
63.6(c)(3)–(4)		No	[Reserved]
63.6(c)(5)	Compliance Dates	Yes.	
63.6(d)		No	[Reserved]
63.6(e)(1)–(2)	Operation & Maintenance	Yes.	
63.6(e)(3)	Startup, Shutdown Malfunction Plan	Yes.	
63.6(f)(1)–(3)	Compliance with Emission Standards	Yes.	
63.6(g)(1)–(3)	Alternative Standard	Yes.	
63.6(h)(1)–(2)	Opacity/VE Standards	Yes.	
63.6(h)(3)		No	[Reserved]
63.6(h)(4)–(h)(5)(i)	Opacity/VE Standards	Yes.	
63.6(h)(5)(ii)–(iv)	Opacity/VE Standards	No	Test duration specified in subpart LLL.
63.6(h)(6)	Opacity/VE Standards	Yes.	
63.6(h)(7)	Opacity/VE Standards	Yes.	
63.6(i)(1)–(14)	Extension of Compliance	Yes.	

TABLE 1 TO SUBPART LLL OF PART 63.—APPLICABILITY OF GENERAL PROVISIONS—Continued

Citation	Requirement	Applies to Subpart LLL	Explaination
63.6(i)(15)		No	[Reserved]
63.6(i)(16)	Extension of Compliance	Yes.	
63.6(j)	Exemption from Compliance	Yes.	
63.7(a)(1)–(3)	Performance Testing Requirements	Yes	§ 63.1349 has specific requirements.
63.7(b)	Notification	Yes.	
63.7(c)	Quality Assurance/Test Plan	Yes.	
63.7(d)	Testing Facilities	Yes.	
63.7(e)(1)–(4)	Conduct of Tests	Yes.	
63.7(f)	Alternative Test Method	Yes.	
63.7(g)	Data Analysis	Yes.	
63.7(h)	Waiver of Tests	Yes.	
63.8(a)(1)	Monitoring Requirements	Yes.	
63.8(a)(2)	Monitoring	No	§ 63.1350 includes CEMS requirements.
63.8(a)(3)		No	[Reserved]
63.8(a)(4)	Monitoring	No	Flares not applicable.
63.8(b)(1)–(3)	Conduct of Monitoring	Yes.	
63.8(c)(1)–(8)	CMS Operation/Maintenance	Yes	Performance specification supersedes requirements for THC CEMS Temperature and activated carbon injection monitoring data reduction requirements given in subpart LLL.
63.8(d)	Quality Control	Yes.	
63.8(e)	Performance Evaluation for CMS	Yes	Performance specification supersedes requirements for THC CEMS.
63.8(f)(1)–(5)	Alternative Monitoring Method	Yes	Additional requirements in § 63.1350(l).
63.8(f)(6)	Alternative to RATA Test	Yes.	
63.8(g)	Data Reduction	Yes.	
63.9(a)	Notification Requirements	Yes.	
63.9(b)(1)–(5)	Initial Notifications	Yes.	
63.9(c)	Request for Compliance Extension	Yes.	
63.9(d)	New Source Notification for Special Compliance Requirements.	Yes.	
63.9(e)	Notification of Performance Test	Yes.	
63.9(f)	Notification of VE/Opacity Test	Yes	Notification not required for VE/opacity test under § 63.1350(e) and (j).
63.9(g)	Additional CMS Notifications	Yes.	
63.9(h)(1)–(3)	Notification of Compliance Status	Yes.	
63.9(h)(4)		No	[Reserved]
63.9(h)(5)–(6)	Notification of Compliance Status	Yes.	
63.9(i)	Adjustment of Deadlines	Yes.	
63.9(j)	Change in Previous Information	Yes.	
63.10(a)	Recordkeeping/Reporting	Yes.	
63.10(b)	General Requirements	Yes.	
63.10(c)(1)	Additional CMS Recordkeeping	Yes	PS–8A supersedes requirements for THC CEMS.
63.10(c)(2)–(4)		No	[Reserved]
63.10(c)(5)–(8)	Additional CMS Recordkeeping	Yes	PS–8A supersedes requirements for THC CEMS.
63.10(c)(9)		No	[Reserved]

63.10(c)(10)–(15)	Additional CMS Recordkeeping	Yes	PS–8A supersedes requirements for THC CEMS.
63.10(d)(1)	General Reporting Requirements	Yes.	
63.10(d)(2)	Performance Test Results	Yes.	
63.10(d)(3)	Opacity or VE Observations	Yes.	
63.10(d)(4)	Progress Reports	Yes.	
63.10(d)(5)	Startup, Shutdown, Malfunction Reports	Yes.	
63.10(e)(1)–(2)	Additional CMS Reports	Yes.	
63.10(e)(3)	Excess Emissions and CMS Performance Reports	Yes	Exceedances are defined in subpart LLL.
63.10(f)	Waiver for Recordkeeping/Reporting	Yes.	
63.11(a)–(b)	Control Device Requirements	No	Flares not applicable.
63.12(a)–(c)	State Authority and Delegations	Yes.	
63.13(a)–(c)	State/Regional Addresses	Yes.	
63.14(a)–(b)	Incorporation by Reference	Yes.	
63.15(a)–(b)	Availability of Information	Yes.	

Subpart MMM—National Emission Standards for Hazardous Air Pollutants for Pesticide Active Ingredient Production

SOURCE: 64 FR 33589, June 23, 1999, unless otherwise noted.

§ 63.1360 Applicability.

(a) *Definition of affected source.* The affected source subject to this subpart is the facility-wide collection of pesticide active ingredient manufacturing process units (PAI process units) that process, use, or produce HAP, and are located at a plant site that is a major source, as defined in section 112(a) of the CAA. An affected source also includes waste management units, heat exchange systems, and cooling towers that are associated with the PAI process units. Exemptions from an affected source are specified in paragraph (d) of this section.

(b) *New source applicability.* A new affected source subject to this subpart and to which the requirements for new sources apply is defined according to the criteria in either paragraph (b)(1) or (2) of this section.

(1) An affected source for which construction or reconstruction commenced after November 10, 1997.

(2) Any single PAI process unit that:

(i) Is not part of a process unit group; and

(ii) For which construction, as defined in § 63.1361, commenced after November 10, 1997; and

(iii) Has the potential to emit 10 tons/yr of any one HAP or 25 tons/yr of combined HAP.

(c) *General provisions.* Table 1 of this subpart specifies the provisions of subpart A of this part that apply to an owner or operator of an affected source subject to this subpart, and clarifies specific provisions in subpart A of this part as necessary for this subpart.

(d) *Exemptions from the requirements of this subpart.* The provisions of this subpart do not apply to:

(1) Research and development facilities;

(2) PAI process units that are subject to subpart F of this part;

(3) Production of ethylene; and

(4) The following emission points listed:

(i) Storm water from segregated sewers;

(ii) Water from fire-fighting and deluge systems, including testing of such systems;

(iii) Spills;

(iv) Water from safety showers;

(v) Noncontact steam boiler blowdown and condensate;

(vi) Laundry water;

(vii) Vessels storing material that contains no organic HAP or contains organic HAP as impurities only; and

(viii) Equipment, as defined in § 63.1363, that is intended to operate in organic HAP service for less than 300 hours during the calendar year.

(e) *Applicability of this subpart except during periods of startup, shutdown, and malfunction.* (1) Each provision set forth in this subpart shall apply at all times except that emission limitations shall not apply during periods of startup, shutdown, and malfunction, as defined in § 63.1361, if:

(i) The startup, shutdown, or malfunction precludes the ability of the owner or operator of an affected source to comply with one or more specific emission limitations to which a particular emission point is subject; and

(ii) The owner or operator follows the provisions for periods of startup, shutdown, and malfunction, as specified in §§ 63.1367(a)(3) and 63.1368(i).

(2) The provisions set forth in § 63.1363 shall apply at all times except during periods of nonoperation of the PAI process unit (or specific portion thereof) in which the lines are drained and depressurized resulting in the cessation of the emissions to which § 63.1363 applies.

(3) The owner or operator shall not shut down items of equipment that are required or utilized for compliance with the emissions limitations of this subpart during times when emissions (or, where applicable, wastewater streams or residuals) are being routed to such items of equipment, if the shutdown would contravene emissions limitations of this subpart applicable to such items of equipment. This paragraph does not apply if the item of equipment is malfunctioning, or if the owner or operator must shut down the equipment to avoid damage due to a

malfunction of the PAI process unit or portion thereof.

(4) During startups, shutdowns, and malfunctions when the emissions limitations of this subpart do not apply pursuant to paragraphs (e)(1) through (3) of this section, the owner or operator shall implement, to the extent reasonably available, measures to prevent or minimize excess emissions. For purposes of this paragraph, ''excess emissions'' means emissions in excess of those that would have occurred if there were no startup, shutdown, or malfunction and the owner or operator complied with the relevant provisions of this subpart. The measures to be taken shall be identified in the applicable startup, shutdown, and malfunction plan, and may include, but are not limited to, air pollution control technologies, work practices, pollution prevention, monitoring, and/or changes in the manner of operation of the source. Back-up control devices are not required, but may be used if available.

(f) *Storage vessel applicability determination.* An owner or operator shall follow the procedures specified in paragraphs (f)(1) through (4) of this section to determine whether a storage vessel is part of the affected source to which this subpart applies.

(1) If a storage vessel is already subject to another subpart of 40 CFR part 63 on June 23, 1999, the storage vessel shall belong to the process unit subject to the other subpart.

(2) Unless otherwise excluded under paragraph (f)(1) of this section, the storage vessel is part of a PAI process unit if either the input to the vessel from the PAI process unit is greater than or equal to the input from any other PAI or non-PAI process unit, or the output from the vessel to the PAI process unit is greater than or equal to the output to any other PAI or non-PAI process unit. If the greatest input to and/or output from a shared storage vessel is the same for two or more process units, including at least one PAI process unit, the owner or operator may assign the storage vessel to any one of the PAI process units that meet this condition. If the use varies from year to year, then the use for purposes of this subpart for existing sources shall be based on the utilization that occurred during the year preceding June 23, 1999 or, if the storage vessel was not in operation during that year, the use shall be based on the expected use in the 5 years after startup. This determination shall be reported as part of an operating permit application or as otherwise specified by the permitting authority.

(3) Unless otherwise excluded under paragraph (f)(1) of this section, where a storage vessel is located in a tank farm (including a marine tank farm), the applicability of this subpart shall be determined according to the provisions in paragraphs (f)(3)(i) through (iv) of this section.

(i) The storage vessel may only be assigned to a process unit that utilizes the storage vessel and does not have an intervening storage vessel for that product (or raw material, as appropriate). With respect to a process unit, an intervening storage vessel means a storage vessel connected by hard-piping to the process unit and to the storage vessel in the tank farm so that product or raw material entering or leaving the process unit flows into (or from) the intervening storage vessel and does not flow directly into (or from) the storage vessel in the tank farm.

(ii) If no PAI process unit meets the criteria of paragraph (f)(3)(i) of this section with respect to a storage vessel, this subpart does not apply to the storage vessel.

(iii) If only one PAI process unit, and no non-PAI process unit, meets the criteria of paragraph (f)(3)(i) of this section with respect to a storage vessel, the storage vessel shall be assigned to that PAI process unit.

(iv) If two or more process units, including at least one PAI process unit, meet the criteria of paragraph (f)(3)(i) of this section with respect to a storage vessel, the storage vessel shall be assigned to one of those process units according to the provisions of paragraph (f)(2) of this section. The input and output shall be determined among only those process units that meet the criteria of paragraph (f)(3)(i) of this section. If the storage vessel is not assigned to a PAI process unit according to the provisions of paragraph (f)(2) of

this section, this subpart does not apply to the storage vessel.

(4) If the storage vessel begins receiving material from (or sending material to) another process unit, or ceasing to receive material from (or send material to) a PAI process unit, or if the applicability of this subpart has been determined according to the provisions of paragraph (f)(2) of this section, and there is a significant change in the use of the storage vessel, the owner or operator shall reevaluate the ownership determination for the storage vessel.

(g) *Designating production of an intermediate as a PAI process unit.* Except as specified in paragraph (d) of this section, an owner or operator may elect to designate production of any intermediate that does not meet the definition of integral intermediate as a PAI process unit subject to this subpart. Any storage vessel containing the intermediate is assigned to a PAI process unit according to the procedures in paragraph (f) of this section. Any process tank containing the intermediate is part of the process unit used to produce the intermediate.

(h) *Applicability of process units included in a process unit group.* (1) If any of the products produced in the process unit group are subject to 40 CFR part 63, subpart GGG (Pharmaceuticals MACT), the owner or operator may elect to comply with the requirements of subpart GGG for the PAI process unit(s) within the process unit group, except for the following:

(i) The emission limit standard for process vents in § 63.1362(b)(2)(i) shall apply in place of § 63.1254(a)(1) of subpart GGG of this part;

(ii) When the date of April 2, 1997 is provided in § 63.1254(a)(iii) of subpart GGG of this part, the date of June 23, 1999 shall apply for purposes of this subpart; and

(iii) Requirements in § 63.1367(a)(5) regarding application for approval of construction or reconstruction shall apply in place of the provisions in § 63.1259(a)(5) of subpart GGG of this part.

(2) If the primary product of a process unit group is determined to be a material that is subject to another subpart of 40 CFR part 63 on June 23, 1999 or startup of the process unit group, whichever is later, the owner or operator may elect to comply with the other subpart for any PAI process unit within the process unit group.

(3) The primary product of the process unit group shall be determined according to paragraphs (h)(3)(i) and (ii) of this section.

(i) The primary product is the product that is produced for the greatest operating time over a 5 year period, based on expected utilization for the 5 years following the compliance date or following initial startup of the process unit group, whichever is later; or

(ii) If the process unit group produces multiple products equally based on operating time, then the product with the greatest production on a mass basis over 5 years shall represent the primary product of the process unit, based on expected utilization for the 5 years following the compliance date or following initial startup of the unit or unit group, whichever is later.

(i) *Overlap with other regulations.* (1) *Overlap with other MACT standards.* After the compliance dates specified in § 63.1364, an affected source subject to the provisions of this subpart that is also subject to the provisions of any other subpart of 40 CFR part 63 may elect, to the extent the subparts are consistent, under which subpart to maintain records and report to EPA. The affected source shall identify in the Notification of Compliance Status report required by § 63.1368(f) under which authority such records will be maintained.

(2) *Overlap with RCRA subparts AA, BB, and/or CC.* After the compliance dates specified in § 63.1364, if any affected source subject to this subpart is also subject to monitoring, recordkeeping, and reporting requirements in 40 CFR part 264, subpart AA, BB, or CC, or is subject to monitoring and recordkeeping requirements in 40 CFR part 265, subpart AA, BB, or CC, and the owner or operator complies with the periodic reporting requirements under 40 CFR part 264, subpart AA, BB, or CC that would apply to the device if the facility had final-permitted status, the owner or operator may elect to comply either with the monitoring, recordkeeping, and reporting requirements of this subpart, or with the monitoring,

recordkeeping, and reporting requirements in 40 CFR parts 264 and/or 265, as described in this paragraph, which shall constitute compliance with the monitoring, recordkeeping, and reporting requirements of this subpart. If the owner or operator elects to comply with the monitoring, recordkeeping, and reporting requirements in 40 CFR parts 264 and/or 265, the owner or operator shall report all excursions as required by §63.1368(g). The owner or operator shall identify in the Notification of Compliance Status report required by §63.1368(f) the monitoring, recordkeeping, and reporting authority under which the owner or operator will comply.

(3) *Overlap with NSPS subpart Kb.* After the compliance dates specified in §63.1364, a Group 1 or Group 2 storage vessel that is also subject to the provisions of 40 CFR part 60, subpart Kb, is required to comply only with the provisions of this subpart MMM.

(4) *Overlap with subpart I.* After the compliance dates specified in §63.1364, for all equipment within a process unit that contains equipment subject to subpart I of this part, an owner or operator may elect to comply with either the provisions of this subpart MMM or the provisions of subpart H of this part. The owner or operator shall identify in the Notification of Compliance Status report required by §63.1368(f) the provisions with which the owner or operator elects to comply.

(5) *Overlap with RCRA regulations for wastewater.* After the compliance dates specified in §63.1364, the owner or operator of an affected wastewater stream that is also subject to provisions in 40 CFR parts 260 through 272 shall comply with the more stringent control requirements (e.g., waste management units, numerical treatment standards, etc.) and the more stringent testing, monitoring, recordkeeping, and reporting requirements that overlap between the provisions of this subpart and the provisions of 40 CFR parts 260 through 272. The owner or operator shall keep a record of the information used to determine which requirements were the most stringent and shall submit this information if requested by the Administrator.

(6) *Overlap with NSPS subparts III, NNN, and RRR.* After the compliance dates specified in §63.1364, if an owner or operator of a process vent subject to this subpart MMM that is also subject to the provisions of 40 CFR part 60, subpart III, or subpart NNN, or subpart RRR, elects to reduce organic HAP emissions from the process vent by 98 percent as specified in §63.1362(b)(2)(iii)(A), then the owner or operator is required to comply only with the provisions of this subpart MMM. Otherwise, the owner or operator shall comply with the provisions in both this subpart MMM and the provisions in 40 CFR part 60, subparts III, NNN, and RRR, as applicable.

(j) *Meaning of periods of time.* All terms in this subpart MMM that define a period of time for completion of required tasks (e.g., weekly, monthly, quarterly, annual), unless specified otherwise in the section or subsection that imposes the requirement, refer to the standard calendar periods.

(1) Notwithstanding time periods specified in the subpart MMM for completion of required tasks, such time periods may be changed by mutual agreement between the owner and operator and the Administrator, as specified in subpart A of this part (e.g., a period could begin on the compliance date or another date, rather than on the first day of the standard period). For each time period that is changed by agreement, the revised period shall remain in effect until it is changed. A new request is not necessary for each recurring period.

(2) Where the period specified for compliance is a standard calendar period, if the initial compliance date occurs after the beginning of the period, compliance shall be required according to the schedule specified in paragraph (j)(2)(i) or (ii) of this section, as appropriate.

(i) Compliance shall be required before the end of the standard calendar period within which the compliance deadline occurs, if there remain at least 3 days for tasks that must be performed weekly, at least 2 weeks for tasks that must be performed monthly, at least 1 month for tasks that must be performed each quarter, or at least 3

months for tasks that must be performed annually; or

(ii) In all other cases, compliance shall be required before the end of the first full standard calendar period within which the initial compliance deadline occurs.

(3) In all instances where a provision of this subpart MMM requires completion of a task during each of multiple successive periods, an owner or operator may perform the required task at any time during the specified period, provided the task is conducted at a reasonable interval after completion of the task in the previous period.

§ 63.1361 Definitions.

Terms used in this subpart are defined in the CAA, in subpart A of this part, or in this section. If the same term is defined in subpart A of this part and in this section, it shall have the meaning given in this section for the purposes of this subpart MMM.

Air pollution control device or control device means equipment installed on a process vent, storage vessel, wastewater treatment exhaust stack, or combination thereof that reduces the mass of HAP emitted to the air. The equipment may consist of an individual device or a series of devices. Examples include incinerators, carbon adsorption units, condensers, flares, boilers, process heaters, and gas absorbers. Process condensers are not considered air pollution control devices or control devices.

Bag dump means equipment into which bags or other containers containing a powdered, granular, or other solid feedstock material are emptied. A bag dump is part of the process.

Batch emission episode means a discrete venting episode that is associated with a single unit operation. A unit operation may have more than one batch emission episode. For example, a batch distillation unit operation may consist of batch emission episodes associated with charging and heating. Charging the vessel with HAP will result in one discrete batch emission episode that will last through the duration of the charge and will have an average flowrate equal to the rate of the charge. Another discrete batch emission episode will result from the expulsion of expanded vapor as the contents of the vessel are heated.

Batch operation means a noncontinuous operation involving intermittent or discontinuous feed into PAI or integral intermediate manufacturing equipment, and, in general, involves the emptying of the equipment after the batch operation ceases and prior to beginning a new operation. Addition of raw material and withdrawal of product do not occur simultaneously in a batch operation. A batch process consists of a series of batch operations.

Bench-scale batch process means a batch process (other than a research and development facility) that is capable of being located on a laboratory bench top. This bench-scale equipment will typically include reagent feed vessels, a small reactor and associated product separator, recovery and holding equipment. These processes are only capable of producing small quantities of product.

Block means a time period equal to, at a maximum, the duration of a single batch.

Car seal means a seal that is placed on a device that is used to change the position of a valve (e.g., from opened to closed) in such a way that the position of the valve cannot be changed without breaking the seal.

Cleaning operation means routine rinsing, washing, or boil-off of equipment in batch operations between batches.

Closed-loop system means an enclosed system that returns process fluid to the process and is not vented to the atmosphere except through a closed-vent system.

Closed-purge system means a system or combination of system and portable containers, to capture purged liquids. Containers must be covered or closed when not being filled or emptied.

Closed-vent system means a system that is not open to the atmosphere and is composed of piping, ductwork, connections, and, if necessary, flow inducing devices that transport gas or vapor from an emission point to a control device.

Combustion device means an individual unit of equipment, such as a flare, incinerator, process heater, or

boiler, used for the combustion of organic HAP vapors.

Connector means flanged, screwed, or other joined fittings used to connect two pipe lines or a pipe line and a piece of equipment. A common connector is a flange. Joined fittings welded completely around the circumference of the interface are not considered connectors for the purpose of this regulation. For the purpose of reporting and record keeping, connector means joined fittings that are not inaccessible, ceramic, or ceramic-lined as described in §63.1255(b)(1)(vii) and 63.1255(f)(3).

Construction means the onsite fabrication, erection, or installation of an affected source or PAI process unit. Addition of new equipment to an existing PAI process unit does not constitute construction.

Consumption means the makeup quantity of HAP entering a process that is not used as reactant. The quantity of material used as reactant is the theoretical amount needed assuming a 100 percent stoichiometric conversion. Makeup is the net amount of material that must be added to the process to replenish losses.

Container, as used in the wastewater provisions, means any portable waste management unit that has a capacity greater than or equal to 0.1 m^3 in which a material is stored, transported, treated, or otherwise handled. Examples of containers are drums, barrels, tank trucks, barges, dumpsters, tank cars, dump trucks, and ships.

Continuous process means a process where the inputs and outputs flow continuously throughout the duration of the process. Continuous processes typically approach steady state.

Continuous seal means a seal that forms a continuous closure that completely covers the space between the wall of the storage vessel and the edge of the floating roof. A continuous seal may be a vapor-mounted, liquid-mounted, or metallic shoe seal.

Controlled HAP emissions means the quantity of HAP components discharged to the atmosphere from an air pollution control device.

Cover, as used in the wastewater provisions, means a device or system which is placed on or over a waste management unit containing wastewater or residuals so that the entire surface area is enclosed to minimize air emissions. A cover may have openings necessary for operation, inspection, and maintenance of the waste management unit such as access hatches, sampling ports, and gauge wells provided that each opening is closed when not in use. Examples of covers include a fixed roof installed on a wastewater tank, a lid installed on a container, and an air-supported enclosure installed over a waste management unit.

Double block and bleed system means two block valves connected in series with a bleed valve or line that can vent the line between the two block valves.

Duct work means a conveyance system such as those commonly used for heating and ventilation systems. It is often made of sheet metal and often has sections connected by screws or crimping. Hard-piping is not ductwork.

Equipment, for purposes of §63.1363, means each pump, compressor, agitator, pressure relief device, sampling connection system, open-ended valve or line, valve, connector, and instrumentation system in organic hazardous air pollutant service.

External floating roof means a pontoon-type or double-deck type cover that rests on the liquid surface in a storage tank or waste management unit with no fixed roof.

FIFRA means the Federal Insecticide, Fungicide, and Rodenticide Act.

Fill or filling means the introduction of organic HAP into a storage tank or the introduction of a wastewater stream or residual into a waste management unit, but not necessarily to complete capacity.

First attempt at repair means to take action for the purpose of stopping or reducing leakage of organic material to the atmosphere.

Fixed roof means a cover that is mounted on a waste management unit or storage tank in a stationary manner and that does not move with fluctuations in liquid level.

Flame ionization detector (FID) means a device in which the measured change in conductivity of a standard flame (usually hydrogen) due to the insertion

of another gas or vapor is used to detect the gas or vapor.

Floating roof means a cover consisting of a double deck, pontoon single deck, internal floating cover or covered floating roof, which rests upon and is supported by the liquid being contained, and is equipped with a continuous seal or seals to close the space between the roof edge and waste management unit or storage vessel wall.

Flow indicator means a device that indicates whether gas flow is, or whether the valve position would allow gas flow to be, present in a line.

Group 1 process vent means any process vent from a process at an existing or new affected source for which the uncontrolled organic HAP emissions from the sum of all process vents are greater than or equal to 0.15 Mg/yr and/or the uncontrolled hydogen chloride (HCl) and chlorine emissions from the sum of all process vents are greater than or equal to 6.8 Mg/yr.

Group 2 process vent means any process vent that does not meet the definition of a Group 1 process vent.

Group 1 storage vessel means a storage vessel at an existing affected source with a capacity equal to or greater than 75 m^3 and storing material with a maximum true vapor pressure greater than or equal to 3.45 kPa, or a storage vessel at a new affected source with a capacity equal to or greater than 40 m^3 and storing material with a maximum true vapor pressure greater than or equal to 16.5 kPa and with a capacity greater than or equal to 75 m^3 and storing material with a maximum true vapor pressure greater than or equal to 3.45 kPa.

Group 2 storage vessel means a storage vessel that does not meet the definition of a Group 1 storage vessel.

Group 1 wastewater stream means process wastewater at an existing or new source that meets the criteria for Group 1 status in § 63.132(c) of subpart G of this part for compounds in Table 9 of subpart G of this part or a maintenance wastewater stream that contains 5.3 Mg of HAP per discharge event.

Group 2 wastewater stream means any wastewater stream that does not meet the definition of a Group 1 wastewater stream.

Group of processes means all of the equipment associated with processes in a building, processing area, or facility-wide. A group of processes may consist of a single process.

Halogenated compounds means organic compounds that contain chlorine atoms.

Halogenated vent stream means a process, storage vessel, or waste management unit vent stream determined to have a concentration of halogenated compounds of greater than 20 ppmv, as determined through process knowledge, test results using Method 18 of 40 CFR part 60, appendix A, or test results using any other test method that has been validated according to the procedures in Method 301 of appendix A of this part.

Hard-piping means piping or tubing that is manufactured and properly installed using good engineering judgment and standards, such as ANSI B31–3.

Impurity means a substance that is produced coincidentally with the product(s), or is present in a raw material. An impurity does not serve a useful purpose in the production or use of the product(s) and is not isolated.

In gas/vapor service means that a piece of equipment in organic HAP service contains a gas or vapor at operating conditions.

In heavy liquid service means that a piece of equipment in organic HAP service is not in gas/vapor service or in light liquid service.

In light liquid service means that a piece of equipment in organic HAP service contains a liquid that meets the following conditions:

(1) The vapor pressure of one or more of the organic compounds is greater than 0.3 kPa at 20 °C;

(2) The total concentration of the pure organic compounds constituents having a vapor pressure greater than 0.3 kPa at 20 °C is equal to or greater than 20 percent by weight of the total process stream; and

(3) The fluid is a liquid at operating conditions.

NOTE: To definition of ''In light liquid service: Vapor pressures may be determined by the methods described in 40 CFR 60.485(e)(1).

In liquid service means that a piece of equipment in organic HAP service is not in gas/vapor service.

In organic hazardous air pollutant or in organic HAP service means that a piece of equipment either contains or contacts a fluid (liquid or gas) that is at least 5 percent by weight of total organic HAP as determined according to the provisions of §63.180(d) of subpart H of this part. The provisions of §63.180(d) of subpart H of this part also specify how to determine that a piece of equipment is not in organic HAP service.

In vacuum service means that equipment is operating at an internal pressure which is at least 5 kPa below ambient pressure.

In-situ sampling systems means nonextractive samplers or in-line samplers.

Individual drain system means the stationary system used to convey wastewater streams or residuals to a waste management unit or to discharge or disposal. The term includes: hard piping; all process drains and junction boxes; and associated sewer lines, other junction boxes, manholes, sumps, and lift stations conveying wastewater streams or residuals. A segregated stormwater sewer system, which is a drain and collection system designed and operated for the sole purpose of collecting rainfall-runoff at a facility, and which is segregated from all other individual drain systems, is excluded from this definition.

Instrumentation system means a group of equipment components used to condition and convey a sample of the process fluid to analyzers and instruments for the purpose of determining process operating conditions (e.g., composition, pressure, flow, etc.). Valves and connectors are the predominant type of equipment used in instrumentation systems; however, other types of equipment may also be included in these systems. Only valves nominally 0.5 inches and smaller and connectors nominally 0.75 inches and smaller in diameter are considered instrumentation systems for the purposes of this subpart. Valves greater than nominally 0.5 inches and connectors greater than nominally 0.75 inches associated with instrumentation systems are not considered part of instrumentation systems and must be monitored individually.

Integral intermediate means an intermediate for which 50 percent or more of the annual production is used in onsite production of any PAI(s) and that is not stored before being used in the production of another integral intermediate or the PAI(s). For the purposes of this definition, an intermediate is stored if it is discharged to a storage vessel and at least one of the following conditions is met: the processing equipment that discharges to the storage vessel is shutdown before the processing equipment that withdraws from the storage vessel is started up; during an annual period, the material must be stored in the vessel for at least 30 days before being used to make a PAI; or the processing equipment that discharges to the storage vessel is located in a separate building (or processing area) of the plant than the processing equipment that uses material from the storage vessel as a feedstock, and control equipment is not shared by the two processing areas. Any process unit that produces an intermediate and is subject to subpart F of this part is not an integral intermediate.

Intermediate means an organic compound that is produced by chemical reaction and that is further processed or modified in one or more additional chemical reaction steps to produce another intermediate or a PAI.

Internal floating roof means a cover that rests or floats on the liquid surface (but not necessarily in complete contact with it) inside a storage tank or waste management unit that has a permanently affixed roof.

Junction box means a manhole or access point to a wastewater sewer system line or a lift station.

Large control device means a control device that controls process vents, and the total HAP emissions into the control device from all sources are greater than or equal to 10 tons/yr.

Liquid-mounted seal means a foam- or liquid-filled seal mounted in contact with the liquid between the wall of the storage vessel or waste management unit and the floating roof. The seal is mounted continuously around the tank or unit.

Liquids dripping means any visible leakage from the seal including dripping, spraying, misting, clouding, and ice formation. Indications of liquid dripping include puddling or new stains that are indicative of an existing evaporated drip.

Maintenance wastewater means wastewater generated by the draining of process fluid from components in the PAI process unit into an individual drain system prior to or during maintenance activities. Maintenance wastewater can be generated through planned or unplanned shutdowns and during periods not associated with a shutdown. Examples of activities that can generate maintenance wastewaters include descaling of heat exchanger tubing bundles, cleaning of distillation column traps, draining of low legs and high point bleeds, draining of pumps into an individual drain system, and draining of portions of the PAI process unit for repair.

Malfunction means any sudden, infrequent, and not reasonably preventable failure of air pollution control equipment, emissions monitoring equipment, process equipment, or a process to operate in a normal or usual manner. Failures that are caused all or in part by poor maintenance or careless operation are not malfunctions.

Maximum true vapor pressure means the equilibrium partial pressure exerted by the total organic HAP in the stored or transferred liquid at the temperature equal to the highest calendar-month average of the liquid storage or transferred temperature for liquids stored or transferred above or below the ambient temperature or at the local maximum monthly average temperature as reported by the National Weather Service for liquids stored or transferred at the ambient temperature, as determined:

(1) In accordance with methods described in Chapter 19.2 of the American Petroleum Institute's Manual of Petroleum Measurement Standards, Evaporative Loss From Floating-Roof Tanks (incorporated by reference as specified in § 63.14 in subpart A of this part); or

(2) As obtained from standard reference texts; or

(3) As determined by the American Society for Testing and Materials Method D2879–97, Test Method for Vapor Pressure-Temperature Relationship and Initial Decomposition Temperature of Liquids by Isoteniscope (incorporated by reference as specified in § 63.14 of subpart A of this part); or

(4) Any other method approved by the Administrator.

Metallic shoe seal or mechanical shoe seal means metal sheets that are held vertically against the wall of the storage tank by springs, weighted levers, or other mechanisms and connected to the floating roof by braces or other means. A flexible coated fabric (envelope) spans the annular space between the metal sheet and the floating roof.

Nonrepairable means that it is technically infeasible to repair a piece of equipment from which a leak has been detected without a process shutdown.

Open-ended valve or line means any valve, except pressure relief valves, having one side of the valve seat in contact with process fluid and one side open to atmosphere, either directly or through open piping.

Operating scenario, for the purposes of reporting and recordkeeping, means a description of a PAI process unit, including: identification of each wastewater point of determination (POD) and process vent, their associated emissions episodes and durations, and their associated level of control and control devices, as applicable; calculations and engineering analyses required to demonstrate compliance; and a description of operating and/or testing conditions for any associated control device.

Organic compound, as used in the definitions of intermediate and PAI, means any compound that contains both carbon and hydrogen with or without other elements.

Organic HAP means those HAP listed in section 112(b) of the CAA that are measured according to the procedures of Method 18 or Method 25A, 40 CFR part 60, appendix A.

Pesticide active ingredient or PAI means any material that is an active ingredient within the meaning of FIFRA section 2(a); that is used to produce an insecticide, herbicide, or fungicide end use pesticide product; that consists of one or more organic compounds; and that must be labeled

in accordance with 40 CFR part 156 for transfer, sale, or distribution. These materials are typically described by North American Industrial Classification System (NAICS) Codes 325199 and 32532 (i.e., previously known as Standard Industrial Classification System Codes 2869 and 2879). These materials are identified by product classification codes 01, 21, 02, 04, 44, 07, 08, and 16 in block 19 on EPA form 3540–16, the Pesticides Report for Pesticide-Producing Establishments.

Pesticide active ingredient manufacturing process unit (PAI process unit) means a process unit that is used to produce a material that is primarily used as a PAI or integral intermediate. A PAI process unit consists of: the process, as defined in this subpart; associated storage vessels, as determined by the procedures in §63.1360(f); equipment identified in §63.1362(l); connected piping and ducts; and components such as pumps, compressors, agitators, pressure relief devices, sampling connection systems, open-ended valves or lines, valves, connectors, and instrumentation systems. A material is primarily used as a PAI or integral intermediate if more than 50 percent of the projected annual production from a process unit in the 3 years after June 23, 1999 or startup, whichever is later, is used as a PAI or integral intermediate; recordkeeping is required if the material is used as a PAI or integral intermediate, but not as the primary use. If the primary use changes to a PAI or integral intermediate, the process unit becomes a PAI process unit unless it is already subject to the HON. If the primary use changes from a PAI or integral intermediate to another use, the process unit remains a PAI process unit. Any process tank containing an integral intermediate is part of the PAI process unit used to produce the integral intermediate. A process unit that produces an intermediate that is not an integral intermediate may be designated as a PAI process unit according to the procedures of §63.1360(g). Formulation of pesticide products is not considered part of a PAI process unit. Quality assurance and quality control laboratories are not considered part of a PAI process unit.

Plant site means all contiguous or adjoining property that is under common control, including properties that are separated only by a road or other public right-of-way. Common control includes properties that are owned, leased, or operated by the same entity, parent entity, subsidiary, or any combination thereof.

Point of determination (POD) means each point where a wastewater stream exits the PAI process unit.

NOTE TO DEFINITION OF ''POINT OF DETERMINATION'': The regulation allows determination of the characteristics of a wastewater stream: at the point of determination; or downstream of the point of determination if corrections are made for changes in flow rate and annual average concentration of Table 9 compounds as determined in §63.144 of subpart G of this part. Such changes include: losses by air emissions, reduction of annual average concentration or changes in flow rate by mixing with other water or wastewater streams, and reduction in flow rate or annual average concentration by treating or otherwise handling the wastewater stream to remove or destroy HAP.

Pressure release means the emission of materials resulting from the system pressure being greater than the set pressure of the pressure relief device. This release can be one release or a series of releases over a short time period due to a malfunction in the process.

Pressure relief device or valve means a safety device used to prevent operating pressures from exceeding the maximum allowable working pressure of the process equipment. A common pressure relief device is a spring-loaded pressure relief valve. Devices that are actuated either by a pressure of less than or equal to 2.5 pounds per square inch gauge or by a vacuum are not pressure relief devices.

Process means a logical grouping of processing equipment which collectively function to produce a product. For the purpose of this subpart, a PAI process includes all, or a combination of, reaction, recovery, separation, purification, treatment, cleaning, and other activities or unit operations, which are used to produce a PAI or integral intermediate. A PAI process and all integral intermediate processes for which 100 percent of the annual production is used in the production of the

PAI may be linked together and defined as a single PAI process unit.

Process condenser means a condenser whose primary purpose is to recover material as an integral part of a unit operation. The condenser must cause a vapor-to-liquid phase change for periods during which the temperature of liquid in the process equipment is at or above its boiling or bubble point. Examples of process condensers include distillation condensers, reflux condensers, and condensers used in stripping or flashing operation. In a series of condensers, all condensers up to and including the first condenser with an exit gas temperature below the boiling or bubble point of the liquid in the process equipment are considered to be process condensers. All condensers in line prior to the vacuum source are included in this definition.

Process shutdown means a work practice or operational procedure that stops production from a process or part of a process during which it is technically feasible to clear process material from a process or part of a process consistent with safety constraints and during which repairs can be effected. An unscheduled work practice or operational procedure that stops production from a process or part of a process for less than 24 hours is not a process shutdown. An unscheduled work practice or operational procedure that would stop production from a process or part of a process for a shorter period of time than would be required to clear the process or part of the process of materials and start up the process, and would result in greater emissions than delay of repair of leaking components until the next scheduled process shutdown, is not a process shutdown. The use of spare equipment and technically feasible bypassing of equipment without stopping production are not process shutdowns.

Process tank means a tank that is used within a process to collect material discharged from a feedstock storage vessel or equipment within the process before the material is transferred to other equipment within the process or a product storage vessel. In many process tanks, unit operations such as reactions and blending are conducted. Other process tanks, such as surge control vessels and bottom receivers, however, may not involve unit operations.

Process unit means the equipment assembled and connected by pipes or ducts to process raw materials and to manufacture an intended product.

Process unit group means a group of process units that manufacture PAI's and products other than PAI's by alternating raw materials or operating conditions, or by reconfiguring process equipment. Only process equipment that has been or could be part of a PAI process unit, because of its function or capacity, is included in a process unit group.

Process vent means a point of emission from processing equipment to the atmosphere or a control device. The vent may be the release point for an emission stream associated with an individual unit operation, or it may be the release point for emission streams from multiple unit operations that have been manifolded together into a common header. Examples of process vents include, but are not limited to, vents on condensers used for product recovery, bottom receivers, surge control vessels, reactors, filters, centrifuges, process tanks, and product dryers. A vent is not considered to be a process vent for a given emission episode if the undiluted and uncontrolled emission stream that is released through the vent contains less than 20 ppmv HAP, as determined through process knowledge that no HAP are present in the emission stream; using an engineering assessment as discussed in § 63.1365(b)(2)(ii); from test data collected using Method 1818 of 40 CFR part 60, appendix A; or from test data collected using any other test method that has been validated according to the procedures in Method 301 of appendix A of this part. Process vents do not include vents on storage vessels regulated under § 63.1362(c), vents on wastewater emission sources regulated under § 63.1362(d), or pieces of equipment regulated under § 63.1363.

Process wastewater means wastewater which, during manufacturing or processing, comes into direct contact with, or results from, the production or use of any raw material, intermediate product, finished product, by-product,

or waste product. Examples include: product tank drawdown or feed tank drawdown; water formed during a chemical reaction or used as a reactant; water used to wash impurities from organic products or reactants; water used to clean process equipment; water used to cool or quench organic vapor streams through direct contact; and condensed steam from jet ejector systems pulling vacuum on vessels containing organics.

Product means the compound(s) or chemical(s) that are produced or manufactured as the intended output of a process unit. Impurities and wastes are not considered products.

Product dryer means equipment that is used to remove moisture or other liquid from granular, powdered, or other solid PAI or integral intermediate products prior to storage, formulation, shipment, or other uses. The product dryer is part of the process.

Product dryer vent means a process vent from a product dryer through which a gas stream containing gaseous pollutants (i.e., organic HAP, HCl, or chlorine), particulate matter, or both are released to the atmosphere or are routed to a control device.

Production-indexed HAP consumption factor (HAP factor) is the result of dividing the annual consumption of total HAP by the annual production rate, per process.

Production-indexed VOC consumption factor (VOC factor) is the result of dividing the annual consumption of total VOC by the annual production rate, per process.

Publicly owned treatment works (POTW) is defined at 40 CFR part 403.3(0).

Reactor means a device or vessel in which one or more chemicals or reactants, other than air, are combined or decomposed in such a way that their molecular structures are altered and one or more new organic compounds are formed.

Recovery device, as used in the wastewater provisions, means an individual unit of equipment capable of, and normally used for the purpose of, recovering chemicals for fuel value (i.e., net positive heating value), use, reuse, or for sale for fuel value, use, or reuse. Examples of equipment that may be recovery devices include organic removal devices such as decanters, strippers, or thin-film evaporation units. To be a recovery device, a decanter and any other equipment based on the operating principle of gravity separation must receive only two-phase liquid streams.

Repaired means that equipment is adjusted, or otherwise altered, to eliminate a leak as defined in the applicable paragraphs of §63.1363.

Research and development facility means any stationary source whose primary purpose is to conduct research and development, where the operations are under the close supervision of technically trained personnel, and is not engaged in the manufacture of products for commercial sale, except in a de minimis manner.

Residual means any liquid or solid material containing Table 9 compounds (as defined in §63.111 of subpart G of this part) that is removed from a wastewater stream by a waste management unit or treatment process that does not destroy organics (nondestructive unit). Examples of residuals from nondestructive wastewater management units include the organic layer and bottom residue removed by a decanter or organic-water separator and the overheads from a steam stripper or air stripper. Examples of materials which are not residuals include: silt; mud; leaves; bottoms from a steam stripper or air stripper; and sludges, ash, or other materials removed from wastewater being treated by destructive devices such as biological treatment units and incinerators.

Safety device means a closure device such as a pressure relief valve, frangible disc, fusible plug, or any other type of device which functions exclusively to prevent physical damage or permanent deformation to a unit or its air emission control equipment by venting gases or vapors directly to the atmosphere during unsafe conditions resulting from an unplanned, accidental, or emergency event. For the purposes of this subpart, a safety device is not used for routine venting of gases or vapors from the vapor headspace underneath a cover such as during filling of the unit or to adjust the pressure in this vapor headspace in

response to normal daily diurnal ambient temperature fluctuations. A safety device is designed to remain in a closed position during normal operations and open only when the internal pressure, or another relevant parameter, exceeds the device threshold setting applicable to the air emission control equipment as determined by the owner or operator based on manufacturer recommendations, applicable regulations, fire protection and prevention codes, standard engineering codes and practices, or other requirements for the safe handling of flammable, combustible, explosive, reactive, or hazardous materials.

Sampling connection system means an assembly of equipment within a process unit used during periods of representative operation to take samples of the process fluid. Equipment used to take nonroutine grab samples is not considered a sampling connection system.

Sensor means a device that measures a physical quantity or the change in a physical quantity, such as temperature, pressure, flow rate, pH, or liquid level.

Set pressure means the pressure at which a properly operating pressure relief device begins to open to relieve atypical process system operating pressure.

Sewer line means a lateral, trunk line, branch line, or other conduit including, but not limited to, grates, trenches, etc., used to convey wastewater streams or residuals to a downstream waste management unit.

Shutdown means the cessation of operation of a continuous PAI process unit for any purpose. Shutdown also means the cessation of a batch PAI process unit or any related individual piece of equipment required or used to comply with this part or for emptying and degassing storage vessels for periodic maintenance, replacement of equipment, repair, or any other purpose not excluded from this definition. Shutdown does not apply to cessation of a batch PAI process unit at the end of a campaign or between batches (e.g., for rinsing or washing equipment), for routine maintenance, or for other routine operations.

Small control device means a control device that controls process vents, and the total HAP emissions into the control device from all sources are less than 10 tons of HAP per year.

Startup means the setting in operation of a continuous PAI process unit for any purpose, the first time a new or reconstructed batch PAI process unit begins production, or, for new equipment added, including equipment used to comply with this subpart, the first time the equipment is put into operation. For batch process units, startup does not apply to the first time the equipment is put into operation at the start of a campaign to produce a product that has been produced in the past, after a shutdown for maintenance, or when the equipment is put into operation as part of a batch within a campaign. As used in § 63.1363, startup means the setting in operation of a piece of equipment or a control device that is subject to this subpart.

Storage vessel means a tank or other vessel that is used to store organic liquids that contain one or more HAP and that has been assigned, according to the procedures in § 63.1360(f) or (g), to a PAI process unit that is subject to this subpart MMM. The following are not considered storage vessels for the purposes of this subpart:

(1) Vessels permanently attached to motor vehicles such as trucks, railcars, barges, or ships;

(2) Pressure vessels designed to operate in excess of 204.9 kilopascals and without emissions to the atmosphere;

(3) Vessels storing material that contains no organic HAP or contains organic HAP only as impurities;

(4) Wastewater storage tanks;

(5) Process tanks; and

(6) Nonwastewater waste tanks.

Supplemental gases means any nonaffected gaseous streams (streams that are not from process vents, storage vessels, equipment or waste management units) that contain less than 20 ppmv TOC and less than 20 ppmv total HCl and chlorine, as determined through process knowledge, and are combined with an affected vent stream. Supplemental gases are often used to maintain pressures in manifolds or for fire and explosion protection and prevention. Air required to operate combustion device burner(s) is not considered a supplemental gas.

Surface impoundment means a waste management unit which is a natural topographic depression, manmade excavation, or diked area formed primarily of earthen materials (although it may be lined with manmade materials), which is designed to hold an accumulation of liquid wastes or waste containing free liquids. A surface impoundment is used for the purpose of treating, storing, or disposing of wastewater or residuals, and is not an injection well. Examples of surface impoundments are equalization, settling, and aeration pits, ponds, and lagoons.

Total organic compounds (TOC) means those compounds measured according to the procedures of Method 18 or Method 25A, 40 CFR part 60, appendix A.

Treatment process means a specific technique that removes or destroys the organics in a wastewater or residual stream such as a steam stripping unit, thin-film evaporation unit, waste incinerator, biological treatment unit, or any other process applied to wastewater streams or residuals to comply with §63.138 of subpart G of this part. Most treatment processes are conducted in tanks. Treatment processes are a subset of waste management units.

Uncontrolled HAP emissions means a gas stream containing HAP which has exited the process (or process condenser, if any), but which has not yet been introduced into an air pollution control device to reduce the mass of HAP in the stream. If the process vent is not routed to an air pollution control device, uncontrolled emissions are those HAP emissions released to the atmosphere.

Unit operation means those processing steps that occur within distinct equipment that are used, among other things, to prepare reactants, facilitate reactions, separate and purify products, and recycle materials. Equipment used for these purposes includes, but is not limited to, reactors, distillation units, extraction columns, absorbers, decanters, dryers, condensers, and filtration equipment.

Vapor-mounted seal means a continuous seal that completely covers the annular space between the wall of the storage tank or waste management unit and the edge of the floating roof, and is mounted such that there is a vapor space between the stored liquid and the bottom of the seal.

Volatile organic compounds are defined in 40 CFR 51.100.

Waste management unit means the equipment, structure(s), and/or device(s) used to convey, store, treat, or dispose of wastewater streams or residuals. Examples of waste management units include wastewater tanks, surface impoundments, individual drain systems, and biological wastewater treatment units. Examples of equipment that may be waste management units include containers, air flotation units, oil-water separators or organic-water separators, or organic removal devices such as decanters, strippers, or thin-film evaporation units. If such equipment is a recovery device, then it is part of a PAI process unit and is not a waste management unit.

Wastewater means water that meets either of the conditions described in paragraph (1) or (2) of this definition and is discarded from a PAI process unit that is at an affected source:

(1) Is generated from a PAI process and contains either:

(i) An annual average concentration of compounds in Table 9 of subpart G of this part of at least 5 ppmw and has an average flow rate of 0.02 L/min or greater; or

(ii) An annual average concentration of compounds in Table 9 of subpart G of this part of at least 10,000 ppmw at any flow rate;

(2) Is generated from a PAI process unit as a result of maintenance activities and contains at least 5.3 Mg of HAP per individual discharge event.

Wastewater tank means a stationary waste management unit that is designed to contain an accumulation of wastewater or residuals and is constructed primarily of nonearthen materials (e.g., wood, concrete, steel, plastic) which provide structural support. Wastewater tanks used for flow equalization are included in this definition.

Water seal controls means a seal pot, p-leg trap, or other type of trap filled with water (e.g., flooded sewers that maintain water levels adequate to prevent air flow through the system) that creates a water barrier between the

sewer line and the atmosphere. The water level of the seal must be maintained in the vertical leg of a drain in order to be considered a water seal.

[64 FR 33589, June 23, 1999, as amended at Nov. 21, 2001]

§ 63.1362 Standards.

(a) On and after the compliance dates specified in § 63.1364, each owner or operator of an affected source subject to the provisions of this subpart shall control HAP emissions to the levels specified in this section and in § 63.1363, as summarized in Table 2 of this subpart.

(b) *Process vents.* (1) The owner or operator of an existing source shall comply with the requirements of paragraphs (b)(2) and (3) of this section. The owner or operator of a new source shall comply with the requirements of paragraphs (b)(4) and (5) of this section. Compliance with paragraphs (b)(2) through (b)(5) of this section shall be demonstrated through the applicable test methods and initial compliance procedures in § 63.1365 and the monitoring requirements in § 63.1366.

(2) *Organic HAP emissions from existing sources.* The owner or operator of an existing affected source must comply with the requirements in either paragraph (b)(2)(i) of this section or with the requirements in paragraphs (b)(2)(ii) through (iv) of this section.

(i) The uncontrolled organic HAP emission rate shall not exceed 0.15 Mg/yr from the sum of all process vents within a process.

(ii) (A) Except as provided in paragraph (b)(2)(ii)(B) of this section, uncontrolled organic HAP emissions from a process vent shall be reduced by 98 percent by weight or greater if the flow-weighted average flowrate for the vent as calculated using Equation 1 of this subpart is less than or equal to the flowrate calculated using Equation 2 of this subpart.

$$FR_a = \frac{\sum_{i=1}^{n}(D_i)(FR_i)}{\sum_{i=1}^{n} D_i} \qquad \text{(Eq. 1)}$$

$$FR = 0.02*(HL) - 1{,}000 \qquad \text{(Eq. 2)}$$

Where:

FR_a=flow-weighted average flowrate for the vent, scfm
D_i=duration of each emission event, min
FR_i=flowrate of each emission event, scfm
n=number of emission events
FR=flowrate, scfm
HL=annual uncontrolled organic HAP emissions, lb/yr, as defined in § 63.1361

(B) If the owner or operator can demonstrate that a control device, installed on or before November 10, 1997 on a process vent otherwise subject to the requirements of paragraph (b)(2)(ii)(A) of this section, reduces inlet emissions of total organic HAP by greater than or equal to 90 percent by weight but less than 98 percent by weight, then the control device must be operated to reduce inlet emissions of total organic HAP by 90 percent by weight or greater.

(iii) Excluding process vents that are subject to the requirements in paragraph (b)(2)(ii) of this section, uncontrolled organic HAP emissions from the sum of all process vents within a process shall be reduced by 90 percent or greater by weight.

(iv) As an alternative to the requirements in paragraphs (b)(2)(ii) and (iii) of this section, uncontrolled organic HAP emissions from any process vent may be reduced in accordance with any of the provisions in paragraphs (b)(2)(iv)(A) through (D) of this section. All remaining process vents within a process must be controlled in accordance with paragraphs (b)(2)(ii) and (iii) of this section.

(A) To outlet concentrations less than or equal to 20 ppmv as TOC; or

(B) By a flare that meets the requirements of § 63.11(b); or

(C) By a control device specified in § 63.1365(a)(4); or

(D) In accordance with the alternative standard specified in paragraph (b)(6) of this section.

(3) *HCl and Cl_2 emissions from existing sources.* For each process, the owner or operator of an existing source shall comply with the requirements of either paragraph (b)(3)(i) or (ii) of this section.

(i) The uncontrolled HCl and Cl_2 emissions, including HCl generated

from the combustion of halogenated process vent emissions, from the sum of all process vents within a process shall not exceed 6.8 Mg/yr.

(ii) HCl and Cl_2 emissions, including HCl generated from combustion of halogenated process vent emissions, from the sum of all process vents within a process shall be reduced by 94 percent or greater or to outlet concentrations less than or equal to 20 ppmv.

(4) *Organic HAP emissions from new sources.* For each process, the owner or operator of a new source shall comply with the requirements of either paragraph (b)(4)(i) or (ii) of this section.

(i) The uncontrolled organic HAP emissions shall not exceed 0.15 Mg/yr from the sum of all process vents within a process.

(ii) The uncontrolled organic HAP emissions from the sum of all process vents within a process at a new affected source that are not controlled according to any of the requirements of paragraphs (b)(4)(ii)(A) through (C) or (b)(6) of this section shall be reduced by 98 weight percent or greater.

(A) To outlet concentrations less than or equal to 20 ppmv as TOC; or

(B) By a flare that meets the requirements of §63.11(b); or

(C) By a control device specified in §63.1365(a)(4).

(5) *HCl and Cl_2 emissions from new sources.* For each process, the owner or operator of a new source shall comply with the requirements of either paragraph (b)(5)(i), (ii), or (iii) of this section.

(i) The uncontrolled HCl and Cl_2 emissions, including HCl generated from combustion of halogenated process vent emissions, from the sum of all process vents within a process shall not exceed 6.8 Mg/yr.

(ii) If HCl and Cl_2 emissions, including HCl generated from combustion of halogenated process vent emissions, from the sum of all process vents within a process are greater than or equal to 6.8 Mg/yr and less than 191 Mg/yr, these HCl and Cl_2 emissions shall be reduced by 94 percent or to an outlet concentration less than or equal to 20 ppmv.

(iii) If HCl and Cl_2 emissions, including HCl generated from combustion of halogenated process vent emissions, from the sum of all process vents within a process are greater than 191 Mg/yr, these HCl and Cl_2 emissions shall be reduced by 99 percent or greater or to an outlet concentration less than or equal to 20 ppmv.

(6) *Alternative standard.* As an alternative to the provisions in paragraphs (b) (2) through (5) of this section, the owner or operator may route emissions from a process vent to a control device or series of control devices achieving an outlet TOC concentration, as calibrated on methane or the predominant HAP, of 20 ppmv or less, and an outlet concentration of HCl and Cl_2 of 20 ppmv or less. Any process vents within a process that are not routed to such a control device or series of control devices must be controlled in accordance with the provisions of paragraphs (b)(2)(ii), (b)(2)(iii), (b)(2)(iv), (b)(3)(ii), (b)(3)(iii), (b)(4)(ii), (b)(5)(ii), or (b)(5)(iii) of this section, as applicable.

(c) *Storage vessels.* (1) The owner or operator shall either determine the group status of a storage vessel or designate it as a Group 1 storage vessel. If the owner or operator elects to designate the storage vessel as a Group 1 storage vessel, the owner or operator is not required to determine the maximum true vapor pressure of the material stored in the storage vessel.

(2) *Standard for existing sources.* Except as specified in paragraphs (c) (4) and (5) of this section, the owner or operator of a Group 1 storage vessel at an existing affected source, as defined in §63.1361, shall equip the affected storage vessel with one of the following:

(i) A fixed roof and internal floating roof, or

(ii) An external floating roof, or

(iii) An external floating roof converted to an internal floating roof, or

(iv) A closed vent system meeting the conditions of paragraph (k) of this section and a control device that meets any of the following conditions:

(A) Reduces organic HAP emissions by 95 percent by weight or greater; or

(B) Reduces organic HAP emissions to outlet concentrations of 20 ppmv or less as TOC; or

(C) Is a flare that meets the requirements of §63.11(b); or

(D) Is a control device specified in §63.1365(a)(4).

(3) *Standard for new sources.* Except as specified in paragraphs (c)(4) and (5) of this section, the owner or operator of a Group 1 storage vessel at a new source, as defined in § 63.1361, shall equip the affected storage vessel in accordance with any one of paragraphs (c)(2)(i) through (iv) of this section.

(4) *Alternative standard.* As an alternative to the provisions in paragraphs (c)(2) and (3) of this section, the owner or operator of an existing or new affected source may route emissions from storage vessels to a control device or series of control devices achieving an outlet TOC concentration, as calibrated on methane or the predominant HAP, of 20 ppmv or less, and an outlet concentration of hydrogen chloride and chlorine of 20 ppmv or less.

(5) *Planned routine maintenance.* The owner or operator is exempt from the specifications in paragraphs (c)(2) through (4) of this section during periods of planned routine maintenance of the control device that do not exceed 240 hr/yr.

(6) Compliance with the provisions of paragraphs (c)(2) and (3) of this section is demonstrated using the initial compliance procedures in § 63.1365(d) and the monitoring requirements in § 63.1366. Compliance with the outlet concentrations in paragraph (c)(4) of this section shall be determined by the initial compliance provisions in § 63.1365(a)(5) and the continuous emission monitoring requirements of § 63.1366(b)(5).

(d) *Wastewater.* The owner or operator of each affected source shall comply with the requirements of §§ 63.131 through 63.147 of subpart G of this part, with the differences noted in paragraphs (d)(1) through (13) of this section for the purposes of this subpart.

(1) When the determination of equivalence criteria in § 63.102(b) is referred to in §§ 63.132, 63.133, and 63.137 of subpart G of this part, the provisions in § 63.6(g) of subpart A of this part shall apply.

(2) When the storage tank requirements contained in §§ 63.119 through 63.123 of subpart G of this part are referred to in §§ 63.132 through 63.148 of subpart G of this part, §§ 63.119 through 63.123 of subpart G of this part are applicable, with the exception of the differences noted in paragraphs (d)(2)(i) through (v) of this section.

(i) When the term ''storage vessel'' is used in §§ 63.119 through 63.123 of subpart G of this part, the definition of the term ''storage vessel'' in § 63.1361 shall apply for the purposes of this subpart.

(ii) When December 31, 1992, is referred to in § 63.119 of subpart G of this part, November 10, 1997 shall apply for the purposes of this subpart.

(iii) When April 22, 1994 is referred to in § 63.119 of subpart G of this part, June 23, 1999 shall apply for the purposes of this subpart.

(iv) When the phrase ''the compliance date specified in § 63.100 of subpart F of this part'' is referred to in § 63.120 of subpart G of this part, the phrase ''the compliance date specified in § 63.1364'' shall apply for the purposes of this subpart.

(v) When the phrase ''the maximum true vapor pressure of the total organic HAP in the stored liquid falls below the values defining Group 1 storage vessels specified in Table 5 or Table 6 of this subpart'' is referred to in § 63.120(b)(1)(iv) of subpart G of this part, the phrase, ''the maximum true vapor pressure of the total organic HAP in the stored liquid falls below the values defining Group 1 storage vessels specified in § 63.1361'' shall apply for the purposes of this subpart.

(3) To request approval to monitor alternative parameters, as referred to in § 63.146(a) of subpart G of this part, the owner or operator shall comply with the procedures in § 63.8(f) of subpart A of this part, as referred to in § 63.1366(b)(4), instead of the procedures in § 63.151(f) or (g) of subpart G of this part.

(4) When the Notification of Compliance Status report requirements contained in § 63.152(b) of subpart G of this part are referred to in § 63.146 of subpart G of this part, the Notification of Compliance Status report requirements in § 63.1368(f) shall apply for the purposes of this subpart.

(5) When the recordkeeping requirements contained in § 63.152(f) of subpart G of this part are referred to in § 63.147(d) of subpart G of this part, the recordkeeping requirements in § 63.1367

shall apply for the purposes of this subpart.

(6) When the Periodic report requirements contained in §63.152(c) of subpart G of this part are referred to in §§63.146 and 63.147 of subpart G of this part, the Periodic report requirements contained in §63.1368(g) shall apply for the purposes of this subpart.

(7) When the term ''process wastewater'' is referred to in §§63.132 through 63.147 of subpart G of this part, the term ''wastewater'' as defined in §63.1361 shall apply for the purposes of this subpart.

(8) When the term ''Group 1 wastewater stream'' is used in §§63.132 through 63.147 of subpart G of this part, the definition of the term ''Group 1 wastewater stream'' in §63.1361 shall apply for both new sources and existing sources for the purposes of this subpart.

(9) The requirements in §§63.132 through 63.147 for compounds listed on Table 8 of subpart G of this part shall not apply for the purposes of this subpart.

(10) When the total load of Table 9 compounds in the sum of all process wastewater from PAI process units at a new affected source is 2,100 Mg/yr (2,300 tons/yr) or more, the owner or operator shall reduce, by removal or destruction, the mass flow rate of all compounds in Table 9 of subpart G of this part in all wastewater (process and maintenance wastewater) by 99 percent or more. Alternatively, the owner or operator may treat the wastewater in a unit identified in and complying with §63.138(h) of subpart G of this part. The removal/destruction efficiency shall be determined by the procedures specified in §63.145(c) of subpart G of this part, for noncombustion processes, or §63.145(d) of subpart G of this part, for combustion processes.

(11) The compliance date for the affected source subject to the provisions of this section is specified in §63.1364.

(12) The option in §63.139 of subpart G of this part to reduce emissions from a control device to an outlet HAP concentration of 20 ppmv shall not apply for the purposes of this subpart.

(13) The requirement to correct outlet concentrations from combustion devices to 3 percent oxygen in §63.139(c)(1)(ii) of subpart H of this part shall apply only if supplemental gases are combined with affected vent streams. If emissions are controlled with a vapor recovery system as specified in §63.139(c)(2) of subpart H of this part, the owner or operator must correct for supplemental gases as specified in §63.1365(a)(7)(ii).

(14) If wastewater is sent offsite for biological treatment, the waste management units up to the activated sludge unit must be covered, or the owner or operator must demonstrate that less than 5 percent of the total HAP on list 1 in §63.145(h) of subpart H of this part is emitted from these units.

(e) *Bag dumps and product dryers.* (1) The owner or operator shall reduce particulate matter emissions to a concentration not to exceed 0.01 gr/dscf from product dryers that dry a PAI or integral intermediate that is a HAP.

(2) The owner or operator shall reduce particulate matter emissions to a concentration not to exceed 0.01 gr/dscf from bag dumps that introduce to a PAI process unit a feedstock that is a solid material and a HAP, excluding bag dumps where the feedstock contains HAP only as impurities.

(3) Gaseous HAP emissions from product dryers and bag dumps shall be controlled in accordance with the provisions for process vent emissions in paragraph (b) of this section.

(f) *Heat exchange systems.* Unless one or more of the conditions specified in §63.104(a)(1) through (6) of subpart F of this part are met, an owner or operator shall monitor each heat exchange system that is used to cool process equipment in PAI process units that are part of an affected source as defined in §63.1360(a) according to the provisions in either §63.104(b) or (c) of subpart F of this part. When the term ''chemical manufacturing process unit'' is used in §63.104(c) of subpart F of this part, the term ''PAI process unit'' shall apply for the purposes of this subpart. Whenever a leak is detected, the owner or operator shall comply with the requirements in §63.104(d) of subpart F of this part. Delay of repair of heat exchange systems for which leaks have been detected is allowed in accordance with

the provisions of § 63.104(e) of subpart F of this part.

(g) *Pollution prevention alternative.* Except as provided in paragraph (g)(1) of this section, for a process that has an initial startup before November 10, 1997, an owner or operator may choose to meet the pollution prevention alternative requirement specified in either paragraph (g)(2) or (3) of this section for any PAI process unit, in lieu of the requirements specified in paragraphs (b), (c), (d), and (e) of this section and in § 63.1363. Compliance with the requirements of paragraphs (g)(2) and (3) of this section shall be demonstrated through the procedures in §§ 63.1365(g) and 63.1366(f).

(1) A HAP must be controlled according to the requirements of paragraphs (b), (c), (d), and (e) of this section and § 63.1363 if it is generated in the PAI process unit or an associated control device and it is not part of the production-indexed HAP consumption factor (HAP factor).

(2) The HAP factor shall be reduced by at least 85 percent from a 3-year average baseline beginning no earlier than the 1987 through 1989 calendar years. Alternatively, for a process that has been operating for less than 3 years but more than 1 year, the baseline factor may be calculated for the time period from startup of the process until the present. For any reduction in the HAP factor achieved by reducing a HAP that is also a VOC, an equivalent reduction in the production-indexed VOC consumption factor (VOC factor) is also required (the equivalence is determined on a mass basis, not a percentage basis). For any reduction in the HAP factor that is achieved by reducing a HAP that is not a VOC, the VOC factor may not be increased.

(3) As an alternative to the provisions in paragraph (g)(2) of this section, the owner or operator may combine pollution prevention with emissions control as specified in paragraphs (g)(3)(i) and (ii) of this section.

(i) The HAP factor shall be reduced as specified in paragraph (g)(2) of this section except that a reduction of at least 50 percent shall apply for the purposes of this paragraph.

(ii) The total annual HAP emissions from the PAI process unit shall be reduced by an amount that, when divided by the annual production rate and added to the reduction of the HAP factor yields a value of at least 85 percent of the baseline HAP factor. The total annual VOC emissions from the process unit must be reduced by an amount equivalent to the reduction in HAP emissions for each HAP that is a VOC (the equivalence is determined on a mass basis). For HAP emissions reductions that are achieved by reducing a HAP that is not a VOC, the total annual VOC emissions may not be increased. The reduction in HAP air emissions must be achieved using one of the following control devices:

(A) Combustion control devices such as incinerators, flares, or process heaters.

(B) Control devices such as condensers and carbon adsorbers whose recovered product is destroyed or shipped offsite for destruction.

(C) Any control device that does not ultimately allow for recycling of material back to the PAI process unit.

(D) Any control device for which the owner or operator can demonstrate that the use of the device in controlling HAP emissions will have no effect on the HAP factor for the PAI process unit.

(h) *Emissions averaging provisions.* Except as provided in paragraphs (h)(1) through (7) of this section, the owner or operator of an existing affected facility may choose to comply with the emission standards in paragraphs (b), (c), and (d) of this section by using emissions averaging procedures specified in § 63.1365(h) for organic HAP emissions from any storage vessel, process, or waste management unit that is part of an affected source subject to this subpart.

(1) A State may restrict the owner or operator of an existing source to use only the procedures in paragraphs (b), (c), and (d) of this section to comply with the emission standards where State authorities prohibit averaging of HAP emissions.

(2) Emission points that are controlled as specified in paragraphs (h)(2)(i) through (iii) may not be used to calculate emissions averaging credits, unless a nominal efficiency has

been assigned according to the procedures in §63.150(i) of subpart G of this part. The nominal efficiency must exceed the percent reduction required by paragraphs (b) and (c) of this section for process vents and storage vessels, respectively, and exceed the percent reduction required in §63.138(e) or (f) of subpart G of this part for wastewater streams.

(i) Group 1 storage vessels controlled with an internal floating roof meeting the specifications of §63.119(b) of subpart G of this part, an external floating roof meeting the specifications of §63.119(c) of subpart G of this part, or an external floating roof converted to an internal floating meeting the specifications of §63.119(d) of subpart G of this part.

(ii) Emission points controlled with a flare.

(iii) Wastewater controlled as specified in paragraphs (h)(2)(iii)(A) or (B) of this section.

(A) With controls specified in §63.133 through §63.137 of subpart G of this part;

(B) With a steam stripper meeting the specifications of §63.138(d) of subpart G of this part.

(3) Process vents and storage vessels controlled with a control device to an outlet concentration of 20 ppmv and wastewater streams controlled in a treatment unit to an outlet concentration of 50 ppmw may not be used in any averaging group.

(4) Maintenance wastewater streams and wastewater streams treated in biological treatment units may not be included in any averaging group.

(5) Processes which have been permanently shut down and storage vessels permanently taken out of HAP service may not be included in any averaging group.

(6) Emission points already controlled on or before November 15, 1990 may not be used to generate emissions averaging credits, unless the level of control has been increased after November 15, 1990. In these cases, credit will be allowed only for the increase in control after November 15, 1990.

(7) Emission points controlled to comply with a State or Federal rule other than this subpart may not be included in an emissions averaging group, unless the level of control has been increased after November 15, 1990, above what is required by the other State or Federal rule. Only the control above what is required by the other State or Federal rule will be credited. However, if an emission point has been used to generate emissions averaging credit in an approved emissions average, and the point is subsequently made subject to a State or Federal rule other than this subpart, the point can continue to generate emissions averaging credit for the purpose of complying with the previously approved average.

(i) *Opening of a safety device.* Opening of a safety device, as defined in §63.1361, is allowed at any time conditions require it to avoid unsafe conditions.

(j) *Closed-vent systems.* The owner or operator of a closed-vent system that contains bypass lines that could divert a vent stream away from a control device used to comply with the requirements in paragraphs (b) through (d) of this section shall comply with the requirements of Table 3 of this subpart and paragraph (j)(1) or (2) of this section. Equipment such as low leg drains, high point bleeds, analyzer vents, open-ended valves or lines, rupture disks and pressure relief valves needed for safety purposes are not subject to this paragraph.

(1) Install, calibrate, maintain, and operate a flow indicator that determines whether vent stream flow is present at least once every 15 minutes. Records shall be maintained as specified in §63.1367(f)(1). The flow indicator shall be installed at the entrance to any bypass line that could divert the vent stream away from the control device to the atmosphere; or

(2) Secure the bypass line valve in the closed position with a car seal or lock and key type configuration. A visual inspection of the seal or closure mechanism shall be performed at least once every month to ensure that the valve is maintained in the closed position and the vent stream is not diverted through the bypass line. Records shall be maintained as specified in §63.1367(f)(2).

(k) *Control requirements for certain liquid streams in open systems within a PAI*

process unit. (1) The owner or operator shall comply with the provisions of Table 4 of this subpart, for each item of equipment meeting all the criteria specified in paragraphs (k)(2) through (4) of this section and either paragraph (k)(5)(i) or (ii) of this section.

(2) The item of equipment is of a type identified in Table 4 of this subpart;

(3) The item of equipment is part of a PAI process unit as defined in § 63.1361;

(4) The item of equipment is controlled less stringently than in Table 4 of this subpart, and the item of equipment is not otherwise exempt from controls by the provisions of this subpart or subpart A of this part;

(5) The item of equipment:

(i) Is a drain, drain hub, manhole, lift station, trench, pipe, or oil/water separator that conveys water with a total annual average concentration greater than or equal to 10,000 ppm by weight of compounds in Table 9 of subpart G of this part at any flowrate; or a total annual average concentration greater than or equal to 1,000 ppm by weight of compounds in Table 9 of subpart G of this part at an annual average flow rate greater than or equal to 10 liters per minute; or

(ii) Is a tank that receives one or more streams that contain water with a total annual average concentration greater than or equal to 1,000 ppm by weight of compounds in Table 9 of subpart G of this part at an annual average flowrate greater than or equal to 10 liters per minute. The owner or operator of the source shall determine the characteristics of the stream as specified in paragraphs (k)(5)(ii)(A) and (B) of this section.

(A) The characteristics of the stream being received shall be determined at the inlet to the tank.

(B) The characteristics shall be determined according to the procedures in § 63.144(b) and (c) of subpart G of this part.

(l) *Exemption for RCRA treatment units*. An owner or operator shall be exempt from the initial compliance demonstrations and monitoring provisions in §§ 63.1365 and 63.1366 and the associated recordkeeping and reporting requirements in §§ 63.1367 and 63.1368 for emissions from process vents, storage vessels, and waste management units that are discharged to the following devices:

(1) A boiler or process heater burning hazardous waste for which the owner or operator:

(i) Has been issued a final permit under 40 CFR part 270 and complies with the requirements of 40 CFR part 266, subpart H; or

(ii) Has certified compliance with the interim status requirements of 40 CFR part 266, subpart H.

(2) A hazardous waste incinerator for which the owner or operator has been issued a final permit under 40 CFR part 270 and complies with the requirements of 40 CFR part 264, subpart O, or has certified compliance with the interim status requirements of 40 CFR part 265, subpart O.

§ 63.1363 Standards for equipment leaks.

(a) *General equipment leak requirements*. (1) The provisions of this section apply to ''equipment'' as defined in § 63.1361 and any closed-vent systems and control devices required by this subpart.

(2) *Consistency with other regulations*. After the compliance date for a process, equipment subject to both this section and either of the following will be required to comply only with the provisions of this subpart:

(i) 40 CFR part 60.

(ii) 40 CFR part 61.

(3) [Reserved]

(4) The provisions in § 63.1(a)(3) of subpart A of this part do not alter the provisions in paragraph (a)(2) of this section.

(5) Lines and equipment not containing process fluids are not subject to the provisions of this section. Utilities, and other nonprocess lines, such as heating and cooling systems which do not combine their materials with those in the processes they serve, are not considered to be part of a process.

(6) The provisions of this section do not apply to bench-scale processes, regardless of whether the processes are located at the same plant site as a process subject to the provisions of this subpart MMM.

(7) Each piece of equipment to which this section applies shall be identified

such that it can be distinguished readily from equipment that is not subject to this section. Identification of the equipment does not require physical tagging of the equipment. For example, the equipment may be identified on a plant site plan, in log entries, or by designation of process boundaries by some form of weatherproof identification. If changes are made to the affected source subject to the leak detection requirements, equipment identification for each type of component shall be updated, if needed, within 15 calendar days of the end of each monitoring period for that component.

(8) Equipment that is in vacuum service is excluded from the requirements of this section.

(9) Equipment that is in organic HAP service, but is in such service less than 300 hours per calendar year, is excluded from the requirements of this section if it is identified as required in paragraph (g)(9) of this section.

(10) When each leak is detected by visual, audible, or olfactory means, or by monitoring as described in §63.180(b) or (c) of subpart H of this part, the following requirements apply:

(i) A weatherproof and readily visible identification, marked with the equipment identification number, shall be attached to the leaking equipment.

(ii) The identification on a valve or connector in light liquid or gas/vapor service may be removed after it has been monitored as specified in paragraph (e)(7)(iii) of this section and §63.174(e) of subpart H of this part, and no leak has been detected during the follow-up monitoring.

(iii) The identification on equipment, except on a valve or connector in light liquid or gas/vapor service, may be removed after it has been repaired.

(b) *References.* The owner or operator shall comply with the provisions of subpart H of this part as specified in paragraphs (b)(1) through (3) of this section. When the term ''process unit'' is used in subpart H of this part, it shall mean any group of processes for the purposes of this subpart. Groups of processes as used in this subpart may be any individual process or combination of processes.

(1) Sections 63.160, 63.161, 63.162, 63.163, 63.167, 63.168, 63.170, 63.173, 63.175, 63.176, 63.181, and 63.182 of subpart H of this part shall not apply for the purposes of this subpart MMM. The owner or operator shall comply with the provisions specified in paragraphs (b)(1)(i) through (viii) of this section.

(i) Sections 63.160 and 63.162 of subpart H of this part shall not apply, instead the owner or operator shall comply with paragraph (a) of this section;

(ii) Section 63.161 of subpart H of this part shall not apply, instead the owner or operator shall comply with §63.1361;

(iii) Sections 63.163 and 63.173 of subpart H of this part shall not apply, instead the owner or operator shall comply with paragraph (c) of this section;

(iv) Section 63.167 of subpart H of this part shall not apply, instead the owner or operator shall comply with paragraph (d) of this section;

(v) Section 63.168 of subpart H of this part shall not apply, instead the owner or operator shall comply with paragraph (e) of this section;

(vi) Section 63.170 of subpart H of this part shall not apply, instead the owner or operator shall comply with §63.1362(b);

(vii) Section 63.181 of subpart H of this part shall not apply, instead the owner or operator shall comply with paragraph (g) of this section; and

(viii) Section 63.182 of subpart H of this part shall not apply, instead the owner or operator shall comply with paragraph (h) of this section.

(2) The owner or operator shall comply with §§63.164, 63.165, 63.166, 63.169, 63.177, and 63.179 of subpart H of this part in their entirety, except that when these sections reference other sections of subpart H of this part, the owner or operator shall comply with the revised sections as specified in paragraphs (b)(1) and (3) of this section. Section 63.164 of subpart H of this part applies to compressors. Section 63.165 of subpart H of this part applies to pressure relief devices in gas/vapor service. Section 63.166 of subpart H of this part applies to sampling connection systems. Section 63.169 of subpart H of this part applies to: pumps, valves, connectors, and agitators in heavy liquid service; instrumentation systems; and pressure relief devices in liquid service. Section 63.177 of subpart H of

this subpart applies to general alternative means of emission limitation. Section 63.179 of subpart H of this part applies to alternative means of emission limitation for enclosed-vented process units.

(3) The owner or operator shall comply with §§ 63.171, 63.172, 63.174, 63.178, and 63.180 of subpart H of this part with the differences specified in paragraphs (b)(3)(i) through (v) of this section.

(i) Section 63.171, Delay of repair, shall apply except § 63.171(a) shall not apply. Delay of repair of equipment for which leaks have been detected is allowed if one of the following conditions exist:

(A) The repair is technically infeasible without a process shutdown. Repair of this equipment shall occur by the end of the next scheduled process shutdown.

(B) The owner or operator determines that repair personnel would be exposed to an immediate danger if attempting to repair without a process shutdown. Repair of this equipment shall occur by the end of the next scheduled process shutdown.

(ii) Section 63.172, Closed-vent systems and control devices, shall apply for closed-vent systems used to comply with this section, and for control devices used to comply with this section only, except:

(A) Section 63.172(k) and (l) shall not apply. The owner or operator shall instead comply with paragraph (f) of this section.

(B) Owners or operators may, instead of complying with the provisions of § 63.172(f), design a closed-vent system to operate at a pressure below atmospheric pressure. The system shall be equipped with at least one pressure gauge or other pressure measurement device that can be read from a readily accessible location to verify that negative pressure is being maintained in the closed-vent system when the associated control device is operating.

(iii) Section 63.174, Connectors, shall apply except:

(A) Section 63.174(f) and (g) shall not apply. Instead of § 63.174(f) and (g), the owner or operator shall comply with paragraph (f) of this section.

(B) Days that the connectors are not in organic HAP service shall not be considered part of the 3-month period in § 63.174(e).

(C) Section 63.174(b)(3)(ii) of subpart H of this part shall not apply. Instead, if the percent leaking connectors in the group of process units was less than 0.5 percent, but equal to or greater than 0.25 percent, during the last required monitoring period, monitoring shall be performed once every 4 years. An owner or operator may comply with the requirements of this paragraph by monitoring at least 40 percent of the connectors in the first 2 years and the remainder of the connectors within the next 2 years. The percent leaking connectors will be calculated for the total of all monitoring performed during the 4-year period.

(D) Section 63.174(b)(3)(iv) of subpart H of this part shall not apply. Instead, the owner or operator shall increase the monitoring frequency to once every 2 years for the next monitoring period if leaking connectors comprise at least 0.5 percent but less than 1.0 percent of the connectors monitored within the 4 years specified in paragraph (b)(3)(iii)(C) of this section, or the first 4 years specified in § 63.174(b)(3)(iii) of subpart H of this part. At the end of that 2-year monitoring period, the owner or operator shall monitor once per year while the percent leaking connectors is greater than or equal to 0.5 percent; if the percent leaking connectors is less than 0.5 percent, the owner or operator may return to monitoring once every 4 years or may monitor in accordance with § 63.174(b)(3)(iii) of subpart H of this part, if appropriate.

(E) Section 63.174(b)(3)(v) of subpart H of this part shall not apply. Instead, if an owner or operator complying with the requirements of paragraph (b)(3)(iii)(C) and (D) of this section or § 63.174(b)(3)(iii) of subpart H of this part for a group of process units determines that 1 percent or greater of the connectors are leaking, the owner or operator shall increase the monitoring frequency to one time per year. The owner or operator may again elect to use the provisions of paragraphs (b)(3)(iii)(C) or (D) of this section after a monitoring period in which less than 0.5 percent of the connectors are determined to be leaking.

(F) Section 63.174(b)(3)(iii) of subpart H of this part shall not apply. Instead, monitoring shall be required once every 8 years, if the percent leaking connectors in the group of process units was less than 0.25 percent during the last required monitoring period. An owner or operator shall monitor at least 50 percent of the connectors in the first 4 years and the remainder of the connectors within the next 4 years. If the percent leaking connectors in the first 4 years is equal to or greater than 0.35 percent, the monitoring program shall revert at that time to the appropriate monitoring frequency specified in paragraphs (b)(3)(iii)(C), (D), or (E) of this section.

(iv) Section 63.178 of subpart H of this part, Alternative means of emission limitation: Batch processes, shall apply except that §63.178(b) of subpart H of this part, requirements for pressure testing, shall apply to all processes, not just batch processes;

(v) Section 63.180 of subpart H of this part, Test methods and procedures, shall apply except §63.180(b)(4)(ii)(A) through (C) of subpart H of this part shall not apply. Calibration gases shall be a mixture of methane and air at a concentration of approximately, but less than, 10,000 parts per million methane for agitators, 2,000 parts per million for pumps, and 500 parts per million for all other equipment, except as provided in §63.180(b)(4)(iii) of subpart H of this part.

(c) *standards for pumps in light liquid service and agitators in gas/vapor service and in light liquid service.* (1) The provisions of this section apply to each pump that is in light liquid service, and to each agitator in gas/vapor service or in light liquid service.

(2)(i) *Monitoring.* Each pump and agitator subject to this section shall be monitored quarterly to detect leaks by the method specified in §63.180(b) of subpart H of this part, except as provided in §63.177 of subpart H of this part, paragraph (f) of this section, and paragraphs (c)(5) through (c)(9) of this section.

(ii) *Leak definition.* The instrument reading, as determined by the method as specified in §63.180(b) of subpart H of this part, that defines a leak is:

(A) For agitators, an instrument reading of 10,000 parts per million or greater.

(B) For pumps, an instrument reading of 2,000 parts per million or greater.

(iii) *Visual inspections.* Each pump and agitator shall be checked by visual inspection each calendar week for indications of liquids dripping from the pump or agitator seal. If there are indications of liquids dripping from the seal, a leak is detected.

(3) *Repair provisions.* (i) When a leak is detected, it shall be repaired as soon as practicable, but not later than 15 calendar days after it is detected, except as provided in paragraph (b)(3)(i) of this section.

(ii) A first attempt at repair shall be made no later than 5 calendar days after the leak is detected. First attempts at repair include, but are not limited to, the following practices where practicable:

(A) Tightening of packing gland nuts.

(B) Ensuring that the seal flush is operating at design pressure and temperature.

(4) *Calculation of percent leakers.* (i) The owner or operator shall decide no later than the end of the first monitoring period what groups of processes will be developed. Once the owner or operator has decided, all subsequent percent calculations shall be made on the same basis.

(ii) If, calculated on a 1 year rolling average, the greater of either 10 percent or three of the pumps in a group of processes leak, the owner or operator shall monitor each pump once per month.

(iii) The number of pumps in a group of processes shall be the sum of all the pumps in organic HAP service, except that pumps found leaking in a continuous process within 1 quarter after startup of the pump shall not count in the percent leaking pumps calculation for that one monitoring period only.

(iv) Percent leaking pumps shall be determined using Equation 3 of this subpart:

$$\%P_L = \left[\left(P_L - P_S\right)/\left(P_T - P_S\right)\right] \times 100 \qquad \text{(Eq. 3)}$$

where:

$\%P_L$ = percent leaking pumps

P_L = number of pumps found leaking as determined through quarterly monitoring as required in paragraphs (c)(2)(i) and (ii) of this section.

P_T = total pumps in organic HAP service, including those meeting the criteria in paragraphs (c)(5) and (6) of this section

P_S = number of pumps in a continuous process leaking within 1 quarter of startup during the current monitoring period

(5) *Exemptions*. Each pump or agitator equipped with a dual mechanical seal system that includes a barrier fluid system is exempt from the requirements of paragraphs (c)(1) through (c)(4)(iii) of this section, provided the following requirements are met:

(i) Each dual mechanical seal system is:

(A) Operated with the barrier fluid at a pressure that is at all times greater than the pump/agitator stuffing box pressure; or

(B) Equipped with a barrier fluid degassing reservoir that is connected by a closed-vent system to a control device that complies with the requirements of paragraph (b)(3)(ii) of this section; or

(C) Equipped with a closed-loop system that purges the barrier fluid into a process stream.

(ii) The barrier fluid is not in light liquid service.

(iii) Each barrier fluid system is equipped with a sensor that will detect failure of the seal system, the barrier fluid system, or both.

(iv) Each pump/agitator is checked by visual inspection each calendar week for indications of liquids dripping from the pump/agitator seal.

(A) If there are indications of liquids dripping from the pump/agitator seal at the time of the weekly inspection, the pump/agitator shall be monitored as specified in § 63.180(b) of subpart H of this part to determine if there is a leak of organic HAP in the barrier fluid.

(B) If an instrument reading of 2,000 parts per million or greater is measured for pumps, or 10,000 parts per million or greater is measured for agitators, a leak is detected.

(v) Each sensor as described in paragraph (c)(5)(iii) of this section is observed daily or is equipped with an alarm unless the pump is located within the boundary of an unmanned plant site.

(vi)(A) The owner or operator determines, based on design considerations and operating experience, criteria applicable to the presence and frequency of drips and to the sensor that indicate failure of the seal system, the barrier fluid system, or both.

(B) If indications of liquids dripping from the pump/agitator seal exceed the criteria established in paragraph (c)(5)(vi)(A) of this section, or if, based on the criteria established in paragraph (c)(5)(vi)(A) of this section, the sensor indicates failure of the seal system, the barrier fluid system, or both, a leak is detected.

(C) When a leak is detected, it shall be repaired as soon as practicable, but not later than 15 calendar days after it is detected, except as provided in paragraph (b)(3)(i) of this section.

(D) A first attempt at repair shall be made no later than 5 calendar days after each leak is detected.

(6) Any pump/agitator that is designed with no externally actuated shaft penetrating the pump/agitator housing is exempt from the requirements of paragraphs (c)(1) through (4) of this section, except for the requirements of paragraph (c)(2)(iii) of this section and, for pumps, paragraph (c)(4)(iv) of this section.

(7) Any pump/agitator equipped with a closed-vent system capable of capturing and transporting any leakage from the seal or seals back to the process or to a control device that complies with the requirements of paragraph (b)(3)(ii) of this section is exempt from the requirements of paragraphs (c)(2) through (5) of this section.

(8) Any pump/agitator that is located within the boundary of an unmanned plant site is exempt from the weekly visual inspection requirement of paragraphs (c)(2)(iii) and (c)(5)(iv) of this

section, and the daily requirements of paragraph (c)(5)(v) of this section, provided that each pump/agitator is visually inspected as often as practicable and at least monthly.

(9) If more than 90 percent of the pumps in a group of processes meet the criteria in either paragraph (c)(5) or (6) of this section, the process is exempt from the requirements of paragraph (c)(4) of this section.

(d) *Standards: open-ended valves or lines.* (1)(i) Each open-ended valve or line shall be equipped with a cap, blind flange, plug, or a second valve, except as provided in §63.177 of subpart H of this part and paragraphs (d)(4) through (6) of this section.

(ii) The cap, blind flange, plug, or second valve shall seal the open end at all times except during operations requiring process fluid flow through the open-ended valve or line, or during maintenance or repair. The cap, blind flange, plug, or second valve shall be in place within 1 hour of cessation of operations requiring process fluid flow through the open-ended valve or line, or within 1 hour of cessation of maintenance or repair.

(2) Each open-ended valve or line equipped with a second valve shall be operated in a manner such that the valve on the process fluid end is closed before the second valve is closed.

(3) When a double block and bleed system is being used, the bleed valve or line may remain open during operations that require venting the line between the block valves but shall comply with paragraph (d)(1) of this section at all other times.

(4) Open-ended valves or lines in an emergency shutdown system which are designed to open automatically in the event of a process upset are exempt from the requirements of paragraphs (d)(1) through (3) of this section.

(5) Open-ended valves or lines containing materials which would autocatalytically polymerize are exempt from the requirements of paragraphs (d)(1) through (3) of this section.

(6) Open-ended valves or lines containing materials which could cause an explosion, serious overpressure, or other safety hazard if capped or equipped with a double block and bleed system as specified in paragraphs (d)(1) through (3) of this section are exempt from the requirements of paragraphs (d)(1) through (3) of this section.

(e) *Standards: valves in gas/vapor service and in light liquid service.* (1) The provisions of this section apply to valves that are either in gas/vapor service or in light liquid service.

(2) For existing and new affected sources, all valves subject to this section shall be monitored, except as provided in paragraph (f) of this section and in §63.177 of subpart H of this part, by no later than 1 year after the compliance date.

(3) *Monitoring.* The owner or operator of a source subject to this section shall monitor all valves, except as provided in paragraph (f) of this section and in §63.177 of subpart H of this part, at the intervals specified in paragraph (e)(4) of this section and shall comply with all other provisions of this section, except as provided in paragraph (b)(3)(i) of this section and §§63.178 and 63.179 of subpart H of this part.

(i) The valves shall be monitored to detect leaks by the method specified in §63.180(b) of subpart H of this part.

(ii) An instrument reading of 500 parts per million or greater defines a leak.

(4) *Subsequent monitoring frequencies.* After conducting the initial survey required in paragraph (e)(2) of this section, the owner or operator shall monitor valves for leaks at the intervals specified below:

(i) For a group of processes with 2 percent or greater leaking valves, calculated according to paragraph (e)(6) of this section, the owner or operator shall monitor each valve once per month, except as specified in paragraph (e)(9) of this section.

(ii) For a group of processes with less than 2 percent leaking valves, the owner or operator shall monitor each valve once each quarter, except as provided in paragraphs (e)(4)(iii) through (v) of this section.

(iii) For a group of processes with less than 1 percent leaking valves, the owner or operator may elect to monitor each valve once every 2 quarters.

(iv) For a group of processes with less than 0.5 percent leaking valves, the owner or operator may elect to monitor each valve once every 4 quarters.

(v) For a group of processes with less than 0.25 percent leaking valves, the owner or operator may elect to monitor each valve once every 2 years.

(5) *Calculation of percent leakers.* For a group of processes to which this subpart applies, the owner or operator may choose to subdivide the valves in the applicable group of processes and apply the provisions of paragraph (e)(4) of this section to each subgroup. If the owner or operator elects to subdivide the valves in the applicable group of processes, then the provisions of paragraphs (e)(5)(i) through (viii) of this section apply.

(i) The overall performance of total valves in the applicable group of processes must be less than 2 percent leaking valves, as detected according to paragraphs (e)(3)(i) and (ii) of this section and as calculated according to paragraphs (e)(6)(ii) and (iii) of this section.

(ii) The initial assignment or subsequent reassignment of valves to subgroups shall be governed by the provisions of paragraphs (e)(5)(ii) (A) through (C) of this section.

(A) The owner or operator shall determine which valves are assigned to each subgroup. Valves with less than 1 year of monitoring data or valves not monitored within the last 12 months must be placed initially into the most frequently monitored subgroup until at least 1 year of monitoring data have been obtained.

(B) Any valve or group of valves can be reassigned from a less frequently monitored subgroup to a more frequently monitored subgroup provided that the valves to be reassigned were monitored during the most recent monitoring period for the less frequently monitored subgroup. The monitoring results must be included with the less frequently monitored subgroup's monitoring event and associated next percent leaking valves calculation for that group.

(C) Any valve or group of valves can be reassigned from a more frequently monitored subgroup to a less frequently monitored subgroup provided that the valves to be reassigned have not leaked for the period of the less frequently monitored subgroup (e.g., for the last 12 months, if the valve or group of valves is to be reassigned to a subgroup being monitored annually). Nonrepairable valves may not be reassigned to a less frequently monitored subgroup.

(iii) The owner or operator shall determine every 6 months if the overall performance of total valves in the applicable group of processes is less than 2 percent leaking valves and so indicate the performance in the next Periodic report. If the overall performance of total valves in the applicable group of processes is 2 percent leaking valves or greater, the owner or operator shall revert to the program required in paragraphs (e)(2) through (4) of this section. The overall performance of total valves in the applicable group of processes shall be calculated as a weighted average of the percent leaking valves of each subgroup according to Equation 4 of this subpart:

$$\%V_{LO} = \frac{\sum_{i=1}^{n}\left(\%V_{Li} \times V_i\right)}{\sum_{i=1}^{n} V_i} \qquad \text{(Eq. 4)}$$

where:

$\%V_{LO}$ = overall performance of total valves in the applicable group of processes

$\%V_{Li}$ = percent leaking valves in subgroup i, most recent value calculated according to the procedures in paragraphs (e)(6)(ii) and (iii) of this section

V_i = number of valves in subgroup i

n = number of subgroups

(iv) *Records.* In addition to records required by paragraph (g) of this section, the owner or operator shall maintain records specified in paragraphs (e)(5)(iv)(A) through (D) of this section.

(A) Which valves are assigned to each subgroup,

(B) Monitoring results and calculations made for each subgroup for each monitoring period,

(C) Which valves are reassigned and when they were reassigned, and

(D) The results of the semiannual overall performance calculation required in paragraph (e)(5)(iii) of this section.

(v) The owner or operator shall notify the Administrator no later than 30 days prior to the beginning of the next monitoring period of the decision to

subgroup valves. The notification shall identify the participating processes and the valves assigned to each subgroup.

(vi) *Semiannual reports*. In addition to the information required by paragraph (h)(3) of this section, the owner or operator shall submit in the Periodic reports the information specified in paragraphs (e)(5)(vi)(A) and (B) of this section.

(A) Valve reassignments occurring during the reporting period, and

(B) Results of the semiannual overall performance calculation required by paragraph (e)(5)(iii) of this section.

(vii) To determine the monitoring frequency for each subgroup, the calculation procedures of paragraph (e)(6)(iii) of this section shall be used.

(viii) Except for the overall performance calculations required by paragraphs (e)(5)(i) and (iii) of this section, each subgroup shall be treated as if it were a process for the purposes of applying the provisions of this section.

(6)(i) The owner or operator shall decide no later than the implementation date of this subpart or upon revision of an operating permit how to group the processes. Once the owner or operator has decided, all subsequent percentage calculations shall be made on the same basis.

(ii) Percent leaking valves for each group of processes or subgroup shall be determined using Equation 5 of this subpart:

$$\%V_L = \left[V_L / V_T\right] \times 100 \qquad \text{(Eq. 5)}$$

Where:

$\%V_L$ = percent leaking valves

V_L = number of valves found leaking excluding nonrepairables as provided in paragraph (e)(6)(iv)(A) of this section

V_T = total valves monitored, in a monitoring period excluding valves monitored as required by paragraph (e)(7)(iii) of this section

(iii) When determining monitoring frequency for each group of processes or subgroup subject to monthly, quarterly, or semiannual monitoring frequencies, the percent leaking valves shall be the arithmetic average of the percent leaking valves from the last two monitoring periods. When determining monitoring frequency for each group of processes or subgroup subject to annual or biennial (once every 2 years) monitoring frequencies, the percent leaking valves shall be the arithmetic average of the percent leaking valves from the last three monitoring periods.

(iv)(A) Nonrepairable valves shall be included in the calculation of percent leaking valves the first time the valve is identified as leaking and nonrepairable and as required to comply with paragraph (e)(6)(iv)(B) of this section. Otherwise, a number of nonrepairable valves (identified and included in the percent leaking calculation in a previous period) up to a maximum of 1 percent of the total number of valves in organic HAP service at a process may be excluded from calculation of percent leaking valves for subsequent monitoring periods.

(B) If the number of nonrepairable valves exceeds 1 percent of the total number of valves in organic HAP service at a process, the number of nonrepairable valves exceeding 1 percent of the total number of valves in organic HAP service shall be included in the calculation of percent leaking valves.

(7) *Repair provisions*. (i) When a leak is detected, it shall be repaired as soon as practicable, but no later than 15 calendar days after the leak is detected, except as provided in paragraph (b)(3)(i) of this section.

(ii) A first attempt at repair shall be made no later than 5 calendar days after each leak is detected.

(iii) When a leak is repaired, the valve shall be monitored at least once within the first 3 months after its repair. Days that the valve is not in organic HAP service shall not be considered part of this 3-month period.

(8) First attempts at repair include, but are not limited to, the following practices where practicable:

(i) Tightening of bonnet bolts,

(ii) Replacement of bonnet bolts,

(iii) Tightening of packing gland nuts, and

(iv) Injection of lubricant into lubricated packing.

(9) Any equipment located at a plant site with fewer than 250 valves in organic HAP service in the affected

source is exempt from the requirements for monthly monitoring specified in paragraph (e)(4)(i) of this section. Instead, the owner or operator shall monitor each valve in organic HAP service for leaks once each quarter, or comply with paragraphs (e)(4)(iii) or (iv) of this section.

(f) *Unsafe to monitor, difficult to monitor, and inaccessible equipment.* (1) Equipment that is designated as unsafe to monitor, difficult to monitor, or inaccessible is exempt from the requirements as specified in paragraphs (f)(1)(i) through (iv) of this section provided the owner or operator meets the requirements specified in paragraph (f)(2), (3), or (4) of this section, as applicable. Ceramic or ceramic-lined connectors are subject to the same requirements as inaccessible connectors.

(i) For pumps and agitators, paragraphs (c) (2), (3), and (4) of this section do not apply.

(ii) For valves, paragraphs (e)(2) through (7) of this section do not apply.

(iii) For closed-vent systems, § 63.172(f)(1), (f)(2), and (g) of subpart H of this part do not apply.

(iv) For connectors, § 63.174(b) through (e) of subpart H of this part do not apply.

(2) *Equipment that is unsafe to monitor.* (i) Equipment may be designated as unsafe to monitor if the owner or operator determines that monitoring personnel would be exposed to an immediate danger as a consequence of complying with the monitoring requirements identified in paragraphs (f)(1)(i) through (iv) of this section.

(ii) The owner or operator of equipment that is designated as unsafe-to-monitor must have a written plan that requires monitoring of the equipment as frequently as practicable during safe-to-monitor times, but not more frequently than the periodic monitoring schedule otherwise applicable.

(3) *Equipment that is difficult to monitor.* (i) Equipment may be designated as difficult to monitor if the owner or operator determines that the equipment cannot be monitored without elevating the monitoring personnel more than 2 meters above a support surface or the equipment is not accessible at anytime in a safe manner;

(ii) At an existing source, any equipment within a group of processes that meets the criteria of paragraph (f)(3)(i) of this section may be designated as difficult to monitor. At a new affected source, an owner or operator may designate no more than 3 percent of each type of equipment as difficult to monitor.

(iii) The owner or operator of equipment designated as difficult to monitor must follow a written plan that requires monitoring of the equipment at least once per calendar year.

(4) *Inaccessible equipment and ceramic or ceramic-lined connectors.* (i) A connector, agitator, or valve may be designated as inaccessible if it is:

(A) Buried;

(B) Insulated in a manner that prevents access to the equipment by a monitor probe;

(C) Obstructed by equipment or piping that prevents access to the equipment by a monitor probe;

(D) Unable to be reached from a wheeled scissor-lift or hydraulic-type scaffold which would allow access to equipment up to 7.6 meters above the ground; or

(E) Not able to be accessed at any time in a safe manner to perform monitoring. Unsafe access includes, but is not limited to, the use of a wheeled scissor-lift on unstable or uneven terrain, the use of a motorized man-lift basket in areas where an ignition potential exists, or access would require near proximity to hazards such as electrical lines, or would risk damage to equipment.

(ii) At an existing source, any connector, agitator, or valve that meets the criteria of paragraph (f)(4)(i) of this section may be designated as inaccessible. At a new affected source, an owner or operator may designate no more than 3 percent of each type of equipment as inaccessible.

(iii) If any inaccessible equipment or ceramic or ceramic-lined connector is observed by visual, audible, olfactory, or other means to be leaking, the leak shall be repaired as soon as practicable, but no later than 15 calendar days after the leak is detected, except as provided in paragraph (b)(3)(i) of this section.

(g) *Recordkeeping requirements.* (1) An owner or operator of more than one

group of processes subject to the provisions of this section may comply with the recordkeeping requirements for the groups of processes in one recordkeeping system if the system identifies with each record the program being implemented (e.g., quarterly monitoring) for each type of equipment. All records and information required by this section shall be maintained in a manner that can be readily accessed at the plant site. This could include physically locating the records at the plant site or accessing the records from a central location by computer at the plant site.

(2) *General recordkeeping*. Except as provided in paragraph (g)(5) of this section, the following information pertaining to all equipment subject to the requirements in this section shall be recorded:

(i)(A) A list of identification numbers for equipment (except instrumentation systems) subject to the requirements of this section. Connectors, except those subject to paragraph (f) of this section, need not be individually identified if all connectors in a designated area or length of pipe subject to the provisions of this section are identified as a group, and the number of subject connectors is indicated. The list for each type of equipment shall be completed no later than the completion of the initial survey required for that component. The list of identification numbers shall be updated, if needed, to incorporate equipment changes within 15 calendar days of the completion of each monitoring survey for the type of equipment component monitored.

(B) A schedule for monitoring connectors subject to the provisions of §63.174(a) of subpart H of this part and valves subject to the provisions of paragraph (e)(4) of this section.

(C) Physical tagging of the equipment is not required to indicate that it is in organic HAP service. Equipment subject to the provisions of this section may be identified on a plant site plan, in log entries, or by other appropriate methods.

(ii)(A) A list of identification numbers for equipment that the owner or operator elects to equip with a closed-vent system and control device, under the provisions of paragraph (c)(7) of this section or §§63.164(h) or 63.165(c) of subpart H of this part.

(B) A list of identification numbers for compressors that the owner or operator elects to designate as operating with an instrument reading of less than 500 parts per million above background, under the provisions of §63.164(i) of subpart H of this part.

(iii)(A) A list of identification numbers for pressure relief devices subject to the provisions in §63.165(a) of subpart H of this part.

(B) A list of identification numbers for pressure relief devices equipped with rupture disks, under the provisions of §63.165(d) of subpart H of this part.

(iv) Identification of instrumentation systems subject to the provisions of this section. Individual components in an instrumentation system need not be identified.

(v) The following information shall be recorded for each dual mechanical seal system:

(A) Design criteria required by paragraph (c)(5)(vi)(A) of this section and §63.164(e)(2) of subpart H of this part, and an explanation of the design criteria; and

(B) Any changes to these criteria and the reasons for the changes.

(vi) A list of equipment designated as unsafe to monitor, difficult to monitor, or inaccessible under paragraphs (f) or (b)(3)(i)(B) of this section and a copy of the plan for monitoring or inspecting this equipment.

(vii) A list of connectors removed from and added to the process, as described in §63.174(i)(1) of subpart H of this part, and documentation of the integrity of the weld for any removed connectors, as required in §63.174(j) of subpart H of this part. This is not required unless the net credits for removed connectors is expected to be used.

(viii) For batch processes that the owner or operator elects to monitor as provided under §63.178(c) of subpart H of this part, a list of equipment added to batch product processes since the last monitoring period required in §63.178(c)(3)(ii) and (iii) of subpart H of this part. This list must be completed for each type of equipment within 15 calendar days of the completion of the

each monitoring survey for the type of equipment monitored.

(3) *Records of visual inspections.* For visual inspections of equipment subject to the provisions of paragraphs (c)(2)(iii) and (c)(5)(iv) of this section, the owner or operator shall document that the inspection was conducted and the date of the inspection. The owner or operator shall maintain records as specified in paragraph (g)(4) of this section for leaking equipment identified in this inspection, except as provided in paragraph (g)(5) of this section. These records shall be retained for 5 years.

(4) *Monitoring records.* When each leak is detected as specified in paragraphs (c) and (e) of this section and §§ 63.164, 63.169, 63.172, and 63.174 of subpart H of this part, the owner or operator shall record the information specified in paragraphs (g)(4)(i) through (ix) of this section. All records shall be retained for 5 years, in accordance with the requirements of § 63.10(b)(1) of subpart A of this part.

(i) The instrument and the equipment identification number and the operator name, initials, or identification number.

(ii) The date the leak was detected and the date of first attempt to repair the leak.

(iii) The date of successful repair of the leak.

(iv) If postrepair monitoring is required, maximum instrument reading measured by Method 21 of 40 CFR part 60, appendix A, after it is successfully repaired or determined to be nonrepairable.

(v) ''Repair delayed'' and the reason for the delay if a leak is not repaired within 15 calendar days after discovery of the leak.

(A) The owner or operator may develop a written procedure that identifies the conditions that justify a delay of repair. The written procedures may be included as part of the startup/shutdown/malfunction plan, required by § 63.1367(a), for the source or may be part of a separate document that is maintained at the plant site. Reasons for delay of repair may be documented by citing the relevant sections of the written procedure.

(B) If delay of repair was caused by depletion of stocked parts, there must be documentation that the spare parts were sufficiently stocked onsite before depletion and the reason for depletion.

(vi) If repairs were delayed, dates of process shutdowns that occur while the equipment is unrepaired.

(vii)(A) If the alternative in § 63.174(c)(1)(ii) of subpart H of this part is not in use for the monitoring period, identification, either by list, location (area or grouping), or tagging of connectors disturbed since the last monitoring period required in § 63.174(b) of subpart H of this part, as described in § 63.174(c)(1) of subpart H of this part.

(B) The date and results of follow-up monitoring as required in § 63.174(c) of subpart H of this part. If identification of disturbed connectors is made by location, then all connectors within the designated location shall be monitored.

(viii) The date and results of the monitoring required in § 63.178(c)(3)(i) of subpart H of this part for equipment added to a batch process since the last monitoring period required in § 63.178(c)(3)(ii) and (iii) of subpart H of this part. If no leaking equipment is found in this monitoring, the owner or operator shall record that the inspection was performed. Records of the actual monitoring results are not required.

(ix) Copies of the periodic reports as specified in paragraph (h)(3) of this section, if records are not maintained on a computerized data base capable of generating summary reports from the records.

(5) *Records of pressure tests.* The owner or operator who elects to pressure test a process equipment train and supply lines between storage and processing areas to demonstrate compliance with this section is exempt from the requirements of paragraphs (g)(2), (3), (4), and (6) of this section. Instead, the owner or operator shall maintain records of the following information:

(i) The identification of each product, or product code, produced during the calendar year. It is not necessary to identify individual items of equipment in the process equipment train.

(ii) Records demonstrating the proportion of the time during the calendar year the equipment is in use in the

process that is subject to the provisions of this subpart. Examples of suitable documentation are records of time in use for individual pieces of equipment or average time in use for the process unit. These records are not required if the owner or operator does not adjust monitoring frequency by the time in use, as provided in §63.178(c)(3)(iii) of subpart H of this part.

(iii) Physical tagging of the equipment to identify that it is in organic HAP service and subject to the provisions of this section is not required. Equipment in a process subject to the provisions of this section may be identified on a plant site plan, in log entries, or by other appropriate methods.

(iv) The dates of each pressure test required in §63.178(b) of subpart H of this part, the test pressure, and the pressure drop observed during the test.

(v) Records of any visible, audible, or olfactory evidence of fluid loss.

(vi) When a process equipment train does not pass two consecutive pressure tests, the following information shall be recorded in a log and kept for 2 years:

(A) The date of each pressure test and the date of each leak repair attempt.

(B) Repair methods applied in each attempt to repair the leak.

(C) The reason for the delay of repair.

(D) The expected date for delivery of the replacement equipment and the actual date of delivery of the replacement equipment.

(E) The date of successful repair.

(6) *Records of compressor and pressure relief valve compliance tests.* The dates and results of each compliance test required for compressors subject to the provisions in §63.164(i) of subpart H of this part and the dates and results of the monitoring following a pressure release for each pressure relief device subject to the provisions in §63.165(a) and (b) of subpart H of this part. The results shall include:

(i) The background level measured during each compliance test.

(ii) The maximum instrument reading measured at each piece of equipment during each compliance test.

(7) *Records for closed-vent systems.* The owner or operator shall maintain records of the information specified in paragraphs (g)(7)(i) through (iii) of this section for closed-vent systems and control devices subject to the provisions of paragraph (b)(3)(ii) of this section. The records specified in paragraph (g)(7)(i) of this section shall be retained for the life of the equipment. The records specified in paragraphs (g)(7)(ii) and (iii) of this section shall be retained for 5 years.

(i) The design specifications and performance demonstrations specified in paragraphs (g)(7)(i)(A) through (D) of this section.

(A) Detailed schematics, design specifications of the control device, and piping and instrumentation diagrams.

(B) The dates and descriptions of any changes in the design specifications.

(C) The flare design (i.e., steam assisted, air assisted, or nonassisted) and the results of the compliance demonstration required by §63.11(b) of subpart A of this part.

(D) A description of the parameter or parameters monitored, as required in paragraph (b)(3)(ii) of this section, to ensure that control devices are operated and maintained in conformance with their design and an explanation of why that parameter (or parameters) was selected for the monitoring.

(ii) Records of operation of closed-vent systems and control devices.

(A) Dates and durations when the closed-vent systems and control devices required in paragraph (c) of this section and §§63.164 through 63.166 of subpart H of this part are not operated as designed as indicated by the monitored parameters, including periods when a flare pilot light system does not have a flame.

(B) Dates and durations during which the monitoring system or monitoring device is inoperative.

(C) Dates and durations of startups and shutdowns of control devices required in paragraph (c) of this section and §§63.164 through 63.166 of subpart H of this part.

(iii) Records of inspections of closed-vent systems subject to the provisions of §63.172 of subpart H of this part.

(A) For each inspection conducted in accordance with the provisions of §63.172(f)(1) or (2) of subpart H of this

part during which no leaks were detected, a record that the inspection was performed, the date of the inspection, and a statement that no leaks were detected.

(B) For each inspection conducted in accordance with the provisions of § 63.172(f)(1) or (f)(2) of subpart H of this part during which leaks were detected, the information specified in paragraph (g)(4) of this section shall be recorded.

(8) *Records for components in heavy liquid service*. Information, data, and analysis used to determine that a piece of equipment or process is in heavy liquid service shall be recorded. Such a determination shall include an analysis or demonstration that the process fluids do not meet the criteria of ''in light liquid or gas/vapor service.'' Examples of information that could document this include, but are not limited to, records of chemicals purchased for the process, analyses of process stream composition, engineering calculations, or process knowledge.

(9) *Records of exempt components*. Identification, either by list, location (area or group), or other method of equipment in organic HAP service less than 300 hr/yr subject to the provisions of this section.

(10) *Records of alternative means of compliance determination*. Owners and operators choosing to comply with the requirements of § 63.179 of subpart H of this part shall maintain the following records:

(i) Identification of the process(es) and the organic HAP they handle.

(ii) A schematic of the process, enclosure, and closed-vent system.

(iii) A description of the system used to create a negative pressure in the enclosure to ensure that all emissions are routed to the control device.

(h) *Reporting Requirements*. (1) Each owner or operator of a source subject to this section shall submit the reports listed in paragraphs (h)(1)(i) and (ii) of this section.

(i) A Notification of Compliance Status report described in paragraph (h)(2) of this section, and

(ii) Periodic reports described in paragraph (h)(3) of this section.

(2) *Notification of compliance status report*. Each owner or operator of a source subject to this section shall submit the information specified in paragraphs (h)(2)(i) through (iii) of this section in the Notification of Compliance Status report described in § 63.1368(f). Section 63.9(j) of subpart A of this part shall not apply to the Notification of Compliance Status report.

(i) The notification shall provide the information listed in paragraphs (h)(2)(i)(A) through (C) of this section for each group of processes subject to the requirements of paragraphs (b) through (g) of this section.

(A) Identification of the group of processes.

(B) Approximate number of each equipment type (e.g., valves, pumps) in organic HAP service, excluding equipment in vacuum service.

(C) Method of compliance with the standard (for example, ''monthly leak detection and repair'' or ''equipped with dual mechanical seals'').

(ii) The notification shall provide the information listed in paragraphs (h)(2)(ii)(A) and (B) of this section for each process subject to the requirements of paragraph (b)(3)(iv) of this section and § 63.178(b) of subpart H of this part.

(A) Products or product codes subject to the provisions of this section, and

(B) Planned schedule for pressure testing when equipment is configured for production of products subject to the provisions of this section.

(iii) The notification shall provide the information listed in paragraphs (h)(2)(iii)(A) and (B) of this section for each process subject to the requirements in § 63.179 of subpart H of this part.

(A) Process identification.

(B) A description of the system used to create a negative pressure in the enclosure and the control device used to comply with the requirements of paragraph (b)(3)(ii) of this section.

(3) *Periodic reports*. The owner or operator of a source subject to this section shall submit Periodic reports.

(i) A report containing the information in paragraphs (h)(3)(ii), (iii), and (iv) of this section shall be submitted semiannually. The first Periodic report shall be submitted no later than 240 days after the date the Notification of Compliance Status report is due and

shall cover the 6-month period beginning on the date the Notification of Compliance Status report is due. Each subsequent Periodic report shall cover the 6-month period following the preceding period.

(ii) For equipment complying with the provisions of paragraphs (b) through (g) of this section, the Periodic report shall contain the summary information listed in paragraphs (h)(3)(ii)(A) through (L) of this section for each monitoring period during the 6-month period.

(A) The number of valves for which leaks were detected as described in paragraph (e)(2) of this section, the percent leakers, and the total number of valves monitored;

(B) The number of valves for which leaks were not repaired as required in paragraph (e)(7) of this section, identifying the number of those that are determined nonrepairable;

(C) The number of pumps and agitators for which leaks were detected as described in paragraph (c)(2) of this section, the percent leakers, and the total number of pumps and agitators monitored;

(D) The number of pumps and agitators for which leaks were not repaired as required in paragraph (c)(3) of this section;

(E) The number of compressors for which leaks were detected as described in § 63.164(f) of subpart H of this part;

(F) The number of compressors for which leaks were not repaired as required in § 63.164(g) of subpart H of this part;

(G) The number of connectors for which leaks were detected as described in § 63.174(a) of subpart H of this part, the percent of connectors leaking, and the total number of connectors monitored;

(H) The number of connectors for which leaks were not repaired as required in § 63.174(d) of subpart H of this part, identifying the number of those that are determined nonrepairable;

(I) The facts that explain any delay of repairs and, where appropriate, why a process shutdown was technically infeasible.

(J) The results of all monitoring to show compliance with §§ 63.164(i), 63.165(a), and 63.172(f) of subpart H of this part conducted within the semiannual reporting period.

(K) If applicable, the initiation of a monthly monitoring program under either paragraph (c)(4)(ii) or paragraph (e)(4)(i)(A) of this section.

(L) If applicable, notification of a change in connector monitoring alternatives as described in § 63.174(c)(1) of subpart H of this part.

(iii) For owners or operators electing to meet the requirements of § 63.178(b) of subpart H of this part, the Periodic report shall include the information listed in paragraphs (h)(3)(iii) (A) through (E) of this section for each process.

(A) Product process equipment train identification;

(B) The number of pressure tests conducted;

(C) The number of pressure tests where the equipment train failed either the retest or two consecutive pressure tests;

(D) The facts that explain any delay of repairs; and

(E) The results of all monitoring to determine compliance with § 63.172(f) of subpart H of this part.

(iv) Any change in the information submitted under paragraph (h)(2) of this section shall be provided in the next Periodic report.

§ 63.1364 Compliance dates.

(a) *Compliance dates for existing sources.* (1) An owner or operator of an existing affected source must comply with the provisions in this subpart by December 23, 2003.

(2) Pursuant to section 112(i)(3)(B) of the CAA, an owner or operator of an existing source may request an extension of up to 1 additional year to comply with the provisions of this subpart if the additional time is needed for the installation of controls.

(i) For purposes of this subpart, a request for an extension shall be submitted no later than 120 days prior to the compliance date specified in paragraph (a)(1) of this section, except as provided in paragraph (a)(2)(ii) of this section. The dates specified in § 63.6(i) of subpart A of this part for submittal of requests for extensions shall not apply to sources subject to this subpart.

(ii) An owner or operator may submit a compliance extension request after the date specified in paragraph (a)(1)(i) of this section provided the need for the compliance extension arose after that date and before the otherwise applicable compliance date, and the need arose due to circumstances beyond reasonable control of the owner or operator. This request shall include the data described in § 63.6(i)(8)(A), (B), and (D) of subpart A of this part.

(b) *Compliance dates for new and reconstructed sources.* An owner or operator of a new or reconstructed affected source must comply with the provisions of this subpart on June 23, 1999 or upon startup, whichever is later.

[64 FR 33589, June 23, 1999, as amended at 67 FR 13511, Mar. 22, 2002; 67 FR 38203, June 3, 2002]

§ 63.1365 Test methods and initial compliance procedures.

(a) *General.* Except as specified in paragraph (a)(4) of this section, the procedures specified in paragraphs (c), (d), (e), (f), and (g) of this section are required to demonstrate initial compliance with § 63.1362(b), (c), (d), (f), and (g), respectively. The provisions in paragraph (a)(1) of this section apply to design evaluations that are used to demonstrate compliance with the standards for process vents and storage vessels. The provisions in paragraph (a)(2) of this section apply to performance tests that are specified in paragraphs (c), (d), and (e) of this section. The provisions in paragraph (a)(3) of this section describe initial compliance procedures for flares. The provisions in paragraph (a)(5) of this section are used to demonstrate initial compliance with the alternative standards specified in § 63.1362(b)(6) and (c)(4). The provisions in paragraph (a)(6) of this section are used to comply with the outlet concentration requirements specified in § 63.1362(b)(2)(iv)(A), (b)(3)(ii), (b)(4)(ii)(A), (b)(5)(ii), and (b)(5)(iii).

(1) *Design evaluation.* To demonstrate that a control device meets the required control efficiency, a design evaluation must address the composition and HAP concentration of the vent stream entering the control device. A design evaluation also must address other vent stream characteristics and control device operating parameters as specified in any one of paragraphs (a)(1)(i) through (vii) of this section, depending on the type of control device that is used. If the vent stream is not the only inlet to the control device, the efficiency demonstration also must consider all other vapors, gases, and liquids, other than fuels, received by the control device.

(i) For an enclosed combustion device used to comply with the provisions of § 63.1362(b)(2)(iv), (b)(4)(ii), (c)(2)(iv)(B), or (c)(3) with a minimum residence time of 0.5 seconds and a minimum temperature of 760 °C, the design evaluation must document that these conditions exist.

(ii) For a combustion control device that does not satisfy the criteria in paragraph (a)(1)(i) of this section, the design evaluation must document control efficiency and address the following characteristics, depending on the type of control device:

(A) For a thermal vapor incinerator, the design evaluation must consider the autoignition temperature of the organic HAP, must consider the vent stream flow rate, and must establish the design minimum and average temperature in the combustion zone and the combustion zone residence time.

(B) For a catalytic vapor incinerator, the design evaluation must consider the vent stream flow rate and must establish the design minimum and average temperatures across the catalyst bed inlet and outlet.

(C) For a boiler or process heater, the design evaluation must consider the vent stream flow rate, must establish the design minimum and average flame zone temperatures and combustion zone residence time, and must describe the method and location where the vent stream is introduced into the flame zone.

(iii) For a condenser, the design evaluation must consider the vent stream flow rate, relative humidity, and temperature, and must establish the design outlet organic HAP compound concentration level, design average temperature of the condenser exhaust vent stream, and the design average temperatures of the coolant fluid at the condenser inlet and outlet. The temperature of the gas stream exiting the

condenser must be measured and used to establish the outlet organic HAP concentration.

(iv) For a carbon adsorption system that regenerates the carbon bed directly onsite in the control device such as a fixed-bed adsorber, the design evaluation must consider the vent stream flow rate, relative humidity, and temperature, and must establish the design exhaust vent stream organic compound concentration level, adsorption cycle time, number of carbon beds and their capacities, type and working capacity of activated carbon used for the carbon beds, design total regeneration stream mass or volumetric flow over the period of each complete carbon bed regeneration cycle, design carbon bed temperature after regeneration, design carbon bed regeneration time, and design service life of carbon. For vacuum desorption, the pressure drop must be included.

(v) For a carbon adsorption system that does not regenerate the carbon bed directly onsite in the control device such as a carbon canister, the design evaluation must consider the vent stream mass or volumetric flow rate, relative humidity, and temperature, and must establish the design exhaust vent stream organic compound concentration level, capacity of the carbon bed, type and working capacity of activated carbon used for the carbon bed, and design carbon replacement interval based on the total carbon working capacity of the control device and source operating schedule.

(vi) For a scrubber, the design evaluation must consider the vent stream composition, constituent concentrations, liquid-to-vapor ratio, scrubbing liquid flow rate and concentration, temperature, and the reaction kinetics of the constituents with the scrubbing liquid. The design evaluation must establish the design exhaust vent stream organic compound concentration level and must include the additional information in paragraphs (a)(1)(vi)(A) and (B) of this section for trays and a packed column scrubber.

(A) Type and total number of theoretical and actual trays;

(B) Type and total surface area of packing for entire column, and for individual packed sections if column contains more than one packed section.

(vii) For fabric filters, the design evaluation must include the pressure drop through the device and the net gas-to-cloth ratio (i.e., cubic feet of gas per square feet of cloth).

(2) *Calculation of TOC or total organic HAP concentration.* The TOC concentration or total organic HAP concentration is the sum of the concentrations of the individual components. If compliance is being determined based on TOC, the owner or operator shall compute TOC for each run using Equation 6 of this subpart. If compliance with the percent reduction format of the standard is being determined based on total organic HAP, the owner or operator shall compute total organic HAP using Equation 6 of this subpart, except that only organic HAP compounds shall be summed; when determining compliance with the wastewater provisions of §63.1363(d), the organic HAP compounds shall consist of the organic HAP compounds in Table 9 of subpart G of this part.

$$CG_T = \frac{1}{m}\sum_{j=1}^{m}\left(\sum_{i=1}^{n} CGS_{i,j}\right) \qquad \text{(Eq. 6)}$$

Where:

CG_T = total concentration of TOC in vented gas stream, average of samples, dry basis, ppmv

$CGS_{i,j}$ = concentration of sample components in vented gas stream for sample j, dry basis, ppmv

n = number of compounds in the sample

m = number of samples in the sample run

(3) *Initial compliance using flares.* When a flare is used to comply with the standards, the owner or operator shall comply with the provisions in §63.11(b) of subpart A of this part.

(i) The initial compliance determination shall consist of a visible emissions determination using Method 22 of 40 CFR part 60, appendix A, as described in §63.11(b)(4) of subpart A of this part, and a determination of net heating value of gas being combusted and exit velocity to comply with the requirements of §63.11(b)(6) through (8) of subpart A of this part. The net heating value and exit velocity shall be based on the results of performance testing

under the conditions described in paragraphs (b)(10) and (11) of this section.

(ii) An owner or operator is not required to conduct a performance test to determine percent emission reduction or outlet organic HAP or TOC concentration when a flare is used.

(4) *Exemptions from compliance demonstrations.* An owner or operator using any control device specified in paragraphs (a)(4)(i) through (ii) of this section is exempt from the initial compliance provisions in paragraphs (c), (d), and (e) of this section.

(i) A boiler or process heater with a design heat input capacity of 44 megawatts or greater.

(ii) A boiler or process heater into which the emission stream is introduced with the primary fuel.

(5) *Initial compliance with alternative standard.* Initial compliance with the alternative standards in § 63.1362(b)(6) and (c)(4) is demonstrated when the outlet TOC concentration is 20 ppmv or less, and the outlet HCl and chlorine concentration is 20 ppmv or less. To demonstrate initial compliance, the owner or operator shall be in compliance with the monitoring provisions in § 63.1366(b)(5) on the initial compliance date. The owner or operator shall use Method 18 of 40 CFR part 60, appendix A to determine the predominant organic HAP in the emission stream if the TOC monitor is calibrated on the predominant HAP.

(6) *Initial compliance with the 20 ppmv outlet limit.* Initial compliance with the 20 ppmv TOC and HCl and chlorine concentration is demonstrated when the outlet TOC concentration is 20 ppmv or less, and the outlet HCl and chlorine concentration is 20 ppmv or less. To demonstrate initial compliance, the operator shall use applicable test methods described in paragraphs (b)(1) through (9) of this section, and test under conditions described in paragraphs (b)(10) or (11) of this section, as applicable. The owner or operator shall comply with the monitoring provisions in § 63.1366(b)(1) through (5) on the initial compliance date.

(7) *Outlet concentration correction for supplemental gases.* If supplemental gases are added to a vent stream for which compliance with an outlet concentration standard in § 63.1362 or 63.1363 will be demonstrated, the owner or operator must correct the outlet concentration as specified in paragraphs (a)(7)(i) and (ii) of this section.

(i) *Combustion device.* If the vent stream is controlled with a combustion device, the owner or operator must comply with the provisions in paragraphs (a)(7)(i)(A) through (C) of this section.

(A) To comply with a TOC outlet concentration standard in § 63.1362(b)(2)(iv)(A), (b)(4)(ii)(A), (b)(6), (c)(2)(iv)(B), (c)(4), (d)(13), or § 63.172 of subpart H of this part, the actual TOC outlet concentration must be corrected to 3 percent oxygen.

(B) If the inlet stream to the combustion device contains any HCl, chlorine, or halogenated compounds, and the owner or operator elects to comply with a total HCl and chlorine outlet concentration standard in § 63.1362(b)(3)(ii), (b)(5)(ii), (b)(5)(iii), (b)(6), or (c)(4), the actual total HCl and chlorine outlet concentration must be corrected to 3 percent oxygen.

(C) The integrated sampling and analysis procedures of Method 3B of 40 CFR part 60, appendix A shall be used to determine the actual oxygen concentration ($\%O_{2d}$). The samples shall be taken during the same time that the TOC and HCl and chlorine samples are taken. The concentration corrected to 3 percent oxygen (C_d) shall be computed using Equation 7 of this subpart:

$$C_c = C_m\left(\frac{17.9}{20.9 - \%O_{2d}}\right) \qquad \text{(Eq. 7)}$$

Where:

C_c = concentration of TOC or total HCl and chlorine corrected to 3 percent oxygen, dry basis, ppmv

C_m = total concentration of TOC or total HCl and chlorine in the vented gas stream, average of samples, dry basis, ppmv

$\%O_{2d}$ = concentration of oxygen measured in vented gas stream, dry basis, percent by volume

(ii) *Noncombustion devices.* If a control device other than a combustion device, and not in series with a combustion device, is used to comply with a TOC or

total HCl and chlorine outlet concentration standard, the owner or operator must correct the actual concentration for supplemental gases using Equation 8 of this subpart.

$$C_a = C_m\left(\frac{V_s + V_a}{V_a}\right) \qquad \text{(Eq. 8)}$$

Where:

C_a = corrected outlet TOC or total HCl and chlorine concentration, dry basis, ppmv

C_m = actual TOC or total HCl and chlorine concentration measured at control device outlet, dry basis, ppmv

V_a = total volumetric flow rate of affected streams vented to the control device

V_s = total volumetric flow rate of supplemental gases

(b) *Test methods and conditions.* When testing is conducted to measure emissions from an affected source, the test methods specified in paragraphs (b)(1) through (9) of this section shall be used. Compliance tests shall be performed under conditions specified in paragraphs (b)(10) and (11) of this section. Testing requirements for condensers are specified in paragraph (b)(12) of this section.

(1) Method 1 or 1A of appendix A of 40 CFR part 60 shall be used for sample and velocity traverses.

(2) Method 2, 2A, 2C, or 2D of appendix A of 40 CFR part 60 shall be used for velocity and volumetric flow rates.

(3) Method 3 of appendix A of 40 CFR part 60 shall be used for gas analysis.

(4) Method 4 of appendix A of 40 CFR part 60 shall be used for stack gas moisture.

(5) Concentration measurements shall be adjusted to negate the dilution effects of introducing nonaffected gaseous streams into the vent streams prior to control or measurement. The following methods are specified for concentration measurements of organic compounds:

(i) Method 18 of appendix A of 40 CFR part 60 may be used to determine HAP concentration in any control device efficiency determination.

(ii) Method 25 of appendix A of 40 CFR part 60 may be used to determine total gaseous nonmethane organic concentration for control efficiency determinations in combustion devices.

(iii) Method 25A of appendix A of 40 CFR part 60 may be used to determine the HAP or TOC concentration for control device efficiency determinations under the conditions specified in Method 25 of appendix A of 40 CFR part 60 for direct measurement of an effluent with a flame ionization detector, or in demonstrating compliance with the 20 ppmv TOC outlet standard. If Method 25A of appendix A of 40 CFR part 60 is used to determine the concentration of TOC for the 20 ppmv standard, the instrument shall be calibrated on methane or the predominant HAP. If calibrating on the predominant HAP, the use of Method 25A of appendix A of 40 CFR part 60 shall comply with paragraphs (b)(5)(i)(A) through (C) of this section.

(A) The organic HAP used as the calibration gas for Method 25A, 40 CFR part 60, appendix A, shall be the single organic HAP representing the largest percent by volume.

(B) The use of Method 25A, 40 CFR part 60, appendix A, is acceptable if the response from the high level calibration gas is at least 20 times the standard deviation of the response from the zero calibration gas when the instrument is zeroed on the most sensitive scale.

(C) The span value of the analyzer must be less than 100 ppmv.

(6) The methods in either paragraph (b)(6)(i) or (ii) of this section shall be used to determine the concentration, in mg/dscm, of total HCl and chlorine. Concentration measurements shall be adjusted to negate the dilution effects of introducing nonaffected gaseous streams into the vent streams prior to control or measurement.

(i) Method 26 or 26A of 40 CFR part 60, appendix A.

(ii) Any other method if the method or data have been validated according to the applicable procedures of Method 301 of appendix A of this part.

(7) Method 5 of appendix A of 40 CFR part 60 shall be used to determine the concentration of particulate matter in exhaust gas streams from bag dumps and product dryers.

(8) Wastewater analysis shall be conducted in accordance with §63.144(b)(5)(i) through (iii) of subpart G of this part.

(9) Method 22 of appendix A of 40 CFR part 60 shall be used to determine visible emissions from flares.

(10) *Testing conditions for continuous processes.* Testing of process vents on equipment operating as part of a continuous process shall consist of three one-hour runs. Gas stream volumetric flow rates shall be measured every 15 minutes during each 1-hour run. Organic HAP concentration shall be determined from samples collected in an integrated sample over the duration of each one-hour test run, or from grab samples collected simultaneously with the flow rate measurements (every 15 minutes). If an integrated sample is collected for laboratory analysis, the sampling rate shall be adjusted proportionally to reflect variations in flow rate. For continuous gas streams, the emission rate used to determine compliance shall be the average emission rate of the three test runs.

(11) *Testing conditions for batch processes.* Except as provided in paragraph (b)(12) of this section for condensers, testing of emissions on equipment where the flow of gaseous emissions is intermittent (batch operations) shall be conducted at absolute peak-case conditions or hypothetical peak-case conditions, as specified in paragraphs (b)(11)(i) and (ii) of this section, respectively. Gas stream volumetric flow rates shall be measured at 15-minute intervals. Organic HAP, TOC, or HCl and chlorine concentration shall be determined from samples collected in an integrated sample over the duration of the test, or from grab samples collected simultaneously with the flow rate measurements (every 15 minutes). If an integrated sample is collected for laboratory analysis, the sampling rate shall be adjusted proportionally to reflect variations in flow rate. In all cases, a site-specific test plan shall be submitted to the Administrator for approval prior to testing in accordance with § 63.7(c) of subpart A of this part. The test plan shall include the emissions profile described in paragraph (b)(11)(iii) of this section. The term ''HAP mass loading'' as used in paragraphs (b)(11)(i) through (iii) of this section refers to the class of HAP, either organic or HCl and chlorine, that the control device is intended to control.

(i) *Absolute peak-case.* If the most challenging conditions for the control device occur under maximum HAP load, the absolute peak-case conditions shall be characterized by the criteria presented in paragraph (b)(11)(i)(A) or (B) of this section. Otherwise, absolute peak-case conditions are defined by the conditions in paragraph (b)(11)(i)(C) of this section.

(A) The period in which the inlet to the control device will contain at least 50 percent of the maximum HAP mass load that may be vented to the control device over any 8-hour period. An emission profile as described in paragraph (b)(11)(iii)(A) of this section shall be used to identify the 8-hour period that includes the maximum projected HAP load.

(B) A 1-hour period of time in which the inlet to the control device will contain the highest hourly HAP mass loading rate that may be vented to the control device. An emission profile as described in paragraph (b)(11)(iii)(A) of this section shall be used to identify the 1-hour period of maximum HAP loading.

(C) The period of time when a condition other than the maximum HAP load is most challenging for the control device. These conditions include, but are not limited to the following:

(*1*) Periods when the streams contain the highest combined VOC and HAP hourly load, as described by the emission profiles in paragraph (b)(11)(iii) of this section; or

(*2*) Periods when the streams contain HAP constituents that approach the limits of solubility for scrubbing media; or

(*3*) Periods when the streams contain HAP constituents that approach the limits of adsorptivity for carbon adsorption systems.

(ii) *Hypothetical peak-case.* Hypothetical peak-case conditions are simulated test conditions that, at a minimum, contain the highest total average hourly HAP load of emissions that would be predicted to be vented to the control device from the emissions profile described in either paragraph (b)(11)(iii)(B) or (C) of this section.

(iii) *Emissions profile*. The owner or operator may choose to perform tests only during those periods of the peak-case episode(s) that the owner or operator selects to control as part of achieving the required emission reduction. The owner or operator shall develop an emission profile for the vent to the control device that describes the characteristics of the vent stream at the inlet to the control device under either absolute or hypothetical peak-case conditions. The emissions profile shall be developed based on the applicable procedures described in paragraphs (b)(11)(iii)(A) through (C) of this section, as required by paragraphs (b)(11)(i) and (ii) of this section.

(A) *Emissions profile by process*. The emissions profile must consider all emission episodes that could contribute to the vent stack for a period of time that is sufficient to include all processes venting to the stack and shall consider production scheduling. The profile shall describe the HAP load to the device that equals the highest sum of emissions from the episodes that can vent to the control device during the period of absolute peak-case conditions specified in paragraph (b)(11)(i)(A), (B), or (C) as appropriate. Emissions per episode shall be calculated using the procedures specified in paragraph (c)(2) of this section. When complying with paragraph (b)(1)(i)(B) of this section, emissions per episode shall be divided by the duration of the episode if the duration of the episode is longer than 1 hour.

(B) *Emission profile by equipment*. The emission profile must consist of emissions that meet or exceed the highest hourly HAP load that would be expected under actual processing conditions. The profile shall describe equipment configurations used to generate the emission events, volatility of materials processed in the equipment, and the rationale used to identify and characterize the emission events. The emissions may be based on using a compound more volatile than compounds actually used in the process(es), and the emissions may be generated from all equipment in the process(es) or only selected equipment.

(C) *Emission profile by capture and control device limitation*. The emission profile shall consider the capture and control system limitations and the highest hourly emissions that can be routed to the control device, based on maximum flow rate and concentrations possible because of limitations on conveyance and control equipment (e.g., fans, LEL alarms and safety bypasses).

(iv) *Test duration*. Three runs, at a minimum of 1 hour each, are required for performance testing. Each run must occur over the same absolute or hypothetical peak-case conditions, as defined in paragraph (b)(11)(i) or (ii) of this section.

(12) *Testing requirements for condensers*. For emission streams controlled using condensers, the owner or operator shall calculate the condenser outlet gas temperature that is needed to meet the required percent reduction.

(c) *Initial compliance with process vent provisions*. The owner or operator of an affected source shall demonstrate compliance with the process vent standards in §63.1362(b) using the procedures described in paragraphs (c)(1) through (3) of this section.

(1) Compliance with the process vent standards in §63.1362(b) shall be demonstrated in accordance with the provisions specified in paragraphs (c)(1)(i) through (viii) of this section.

(i) Initial compliance with the emission limit cutoffs in §63.1362(b)(2)(i) and (b)(4)(i) is demonstrated when the uncontrolled organic HAP emissions from the sum of all process vents within a process are less than or equal to 0.15 Mg/yr. Uncontrolled HAP emissions shall be determined using the procedures described in paragraph (c)(2) of this section.

(ii) Initial compliance with the emission limit cutoffs in §63.1362(b)(3)(i) and (b)(5)(i) is demonstrated when the uncontrolled HCl and Cl_2 emissions from the sum of all process vents within a process are less than or equal to 6.8 Mg/yr. Initial compliance with the emission limit cutoffs in §63.1362(b)(5)(ii) and (iii) is demonstrated when the uncontrolled HCl and Cl_2 emissions are greater than or equal to 6.8 Mg/yr or greater than or equal to 191 Mg/yr, respectively. Uncontrolled emissions shall be determined using the procedures described in paragraph (c)(2) of this section.

(iii) Initial compliance with the organic HAP percent reduction requirements specified in § 63.1362(b)(2)(ii), (b)(2)(iii), and (b)(4)(ii) is demonstrated by determining controlled HAP emissions using the procedures described in paragraph (c)(3) of this section, determining uncontrolled HAP emissions using the procedures described in paragraph (c)(2) of this section, and calculating the applicable percent reduction.

(iv) Initial compliance with the HCl and Cl_2 percent reduction requirements specified in § 63.1362(b)(3)(ii), (b)(5)(ii), and (b)(5)(iii) is demonstrated by determining controlled emissions of HCl and Cl_2 using the procedures described in paragraph (c)(3) of this section, determining uncontrolled emissions of HCl and Cl_2 using the procedures described in paragraph (c)(2) of this section, and calculating the applicable percent reduction.

(v) Initial compliance with the outlet concentration limits in § 63.1362(b)(2)(iv)(A), (b)(3)(ii), (b)(4)(ii)(A), (b)(5)(ii), and (b)(5)(iii) is demonstrated when the outlet TOC concentration is 20 ppmv or less and the outlet HCl and chlorine concentration is 20 ppmv or less. The owner or operator shall demonstrate compliance by fulfilling the requirements in paragraph (a)(6) of this section. If an owner or operator elects to develop an emissions profile by process as described in paragraph (b)(11)(iii)(A) of this section, uncontrolled emissions shall be determined using the procedures in paragraph (c)(2) of this section.

(vi) Initial compliance with the alternative standard in § 63.1362(b)(6) is demonstrated by fulfilling the requirements in paragraph (a)(5) of this section.

(vii) Initial compliance when using a flare is demonstrated by fulfilling the requirements in paragraph (a)(3) of this section.

(viii) No initial compliance demonstration is required for control devices specified in § 63.1362(l).

(2) *Uncontrolled emissions*. The owner or operator referred to from paragraphs (c)(1)(i) through (v) of this section shall calculate uncontrolled emissions according to the procedures described in paragraph (c)(2)(i) or (ii) of this section, as appropriate.

(i) *Emission estimation procedures*. The owner or operator shall determine uncontrolled HAP emissions using emission measurements and/or calculations for each batch emission episode according to the engineering evaluation methodology in paragraphs (c)(2)(i)(A) through (H) of this section.

(A) Individual HAP partial pressures in multicomponent systems shall be determined in accordance with the methods specified in paragraphs (c)(2)(i)(A)*(1)* through *(3)* of this section. Chemical property data may be obtained from standard references.

(1) If the components are miscible in one another, use Raoult's law to calculate the partial pressures;

(2) If the solution is a dilute aqueous mixture, use Henry's law constants to calculate partial pressures;

(3) If Raoult's law or Henry's law are not appropriate or available, use any of the methods specified in paragraphs (c)(2)(i)(A)*(3)(i)* through *(iii)* of this section.

(i) Use experimentally obtained activity coefficients;

(ii) Use models such as the group-contribution models to predict activity coefficients;

(iii) Assume the components of the system behave independently and use the summation of all vapor pressures from the HAP as the total HAP partial pressure;

(B) *Charging or filling*. Emissions from vapor displacement due to transfer of material to a vessel shall be calculated using Equation 9 of this subpart:

$$E = \frac{(V)}{(R)(T)} \times \sum_{i=1}^{n} (P_i)(MW_i) \qquad \text{(Eq. 9)}$$

Where:

E = mass of HAP emitted
P_i = partial pressure of the individual HAP
V = volume of gas displaced from the vessel
R = ideal gas law constant
T = temperature of the vessel vapor space; absolute
MW_i = molecular weight of the individual HAP

(C) *Purging*. Emissions from purging shall be calculated using Equation 10 of this subpart, except that for purge flow rates greater than 100 scfm, the mole

fraction of HAP will be assumed to be 25 percent of the saturated value.

$$E = \sum_{i=1}^{n} P_i MW_i \times \frac{(V)(t)}{(R)(T)} \times \frac{P_T}{P_T - \sum_{j=1}^{m} \left(P_j\right)} \qquad \text{(Eq. 10)}$$

Where:

E = mass of HAP emitted
V = purge flow rate at the temperature and pressure of the vessel vapor space
R = ideal gas law constant
T = temperature of the vessel vapor space; absolute
P_i = partial pressure of the individual HAP
P_j = partial pressure of individual condensable VOC compounds (including HAP)
P_T = pressure of the vessel vapor space
MW_i = molecular weight of the individual HAP
t = time of purge
n = number of HAP compounds in the emission stream
m = number of condensable VOC compounds (including HAP) in the emission stream

(D) *Heating*. Emissions caused by heating the contents of a vessel to a temperature less than the boiling point shall be calculated using the procedures in either paragraph (c)(2)(i)(D)(*1*), (*2*), or (*4*) of this section, as appropriate. If the contents of a vessel are heated to the boiling point, emissions while boiling are assumed to be zero if the owner or operator is complying with the provisions in paragraph (d)(2)(i)(C)(*3*) of this section.

(1) If the final temperature to which the vessel contents are heated is lower than 50 K below the boiling point of the HAP in the vessel, then emissions shall be calculated using Equations 11 through 14 of this subpart.

(i) The mass of HAP emitted per episode shall be calculated using Equation 11 of this subpart:

$$E = \frac{\frac{\sum_{i=1}^{n} \left(P_i\right)_{T1}}{Pa_1} + \frac{\sum_{i=1}^{n} \left(P_i\right)_{T2}}{Pa_2}}{2} \times \Delta\eta \times MW_{HAP} \qquad \text{(Eq. 11)}$$

Where:

E = mass of HAP vapor displaced from the vessel being heated
$(P_i)_{Tn}$ = partial pressure of each HAP in the vessel headspace at initial (n = 1) and final (n = 2) temperatures
Pa_1 = initial noncondensable gas pressure in the vessel, as calculated using Equation 13 of this subpart
Pa_2 = final noncondensable gas pressure in the vessel, as calculated using Equation 13 of this subpart
ΔH = number of moles of noncondensable gas displaced, as calculated using Equation 12 of this subpart
MW_{HAP} = The average molecular weight of HAP present in the vessel, as calculated using Equation 14 of this subpart:
n = number of HAP compounds in the displaced vapor

(ii) The moles of noncondensable gas displaced shall be calculated using Equation 12 of this subpart:

$$\Delta\eta = \frac{V}{R}\left[\left(\frac{Pa_1}{T_1}\right) - \left(\frac{Pa_2}{T_2}\right)\right] \qquad \text{(Eq. 12)}$$

where:

ΔH = number of moles of noncondensable gas displaced
V = volume of free space in the vessel
R = ideal gas law constant
Pa_1 = initial noncondensable gas pressure in the vessel, as calculated using Equation 13 of this subpart

Pa_2 = final noncondensable gas pressure in the vessel, as calculated using Equation 13 of this subpart

T_1 = initial temperature of vessel contents, absolute

T_2 = final temperature of vessel contents, absolute

(iii) The initial and final pressure of the noncondensable gas in the vessel shall be calculated according to Equation 13 of this subpart:

$$Pa_n = Pa_{atm} - \sum_{j=1}^{m} \left(P_j\right)_{Tn} \qquad \text{(Eq. 13)}$$

Where:

Pa_n = partial pressure of noncondensable gas in the vessel headspace at initial (n = 1) and final (n = 2) temperatures

P_{atm} = atmospheric pressure

$(P_j)_{Tn}$ = partial pressure of each condensable volatile organic compound (including HAP) in the vessel headspace at the initial temperature (n = 1) and final (n = 2) temperature

(*iv*) The average molecular weight of HAP in the displaced gas shall be calculated using Equation 14 of this subpart:

$$MW_{HAP} = \sum_{i=1}^{n} \frac{\left((P_i)_{T_1} + (P_i)_{T_2}\right) MW_i}{\sum_{i=1}^{n} \left((P_i)_{T_1} + (P_i)_{T_2}\right)} \qquad \text{(Eq. 14)}$$

Where:

MW_{HAP} = average molecular weight of HAP in the displaced gas

$(P_i)_{Tn}$ = partial pressure of each HAP in the vessel headspace at the initial (T_1) and final (T_2) temperatures

MW_i = molecular weight of each HAP

n = number of HAP compounds in the emission stream

(*2*) If the vessel contents are heated to a temperature greater than 50 K below the boiling point, then emissions from the heating of a vessel shall be calculated as the sum of the emissions calculated in accordance with paragraphs (c)(2)(i)(D)(*2*)(*i*) and (*ii*) of this section.

(*i*) For the interval from the initial temperature to the temperature 50 K below the boiling point, emissions shall be calculated using Equation 11 of this subpart, where T_2 is the temperature 50 K below the boiling point.

(*ii*) For the interval from the temperature 50 K below the boiling point to the final temperature, emissions shall be calculated as the summation of emissions for each 5 K increment, where the emission for each increment shall be calculated using Equation 11 of this subpart. If the final temperature of the heatup is lower than 5 K below the boiling point, the final temperature for the last increment shall be the final temperature of the heatup, even if the last increment is less than 5 K. If the final temperature of the heatup is higher than 5 K below the boiling point, the final temperature for the last increment shall be the temperature 5 K below the boiling point, even if the last increment is less than 5 K.

(*3*) While boiling, the vessel must be operated with a properly operated process condenser. An initial demonstration that a process condenser is properly operated is required for vessels that operate process condensers without secondary condensers that are air pollution control devices. The owner or operator must either measure the condenser exhaust gas temperature and show it is less than the boiling point of the substance(s) in the vessel, or perform a material balance around the vessel and condenser to show that at least 99 percent of the material vaporized while boiling is condensed. Uncontrolled emissions are assumed to be zero under these conditions. The initial demonstration shall be conducted for all appropriate operating scenarios and documented in the Notification of Compliance Status report as specified in § 63.1368(f).

(*4*)(*i*) As an alternative to the procedures described in paragraphs (c)(2)(i)(D)(*1*) and (*2*) of this section,

emissions caused by heating a vessel to any temperature less than the boiling point may be calculated using Equation 15 of this subpart.

$$E = MW_{HAP} \times \left(N_{avg} \times \ln\left(\frac{P_T - \sum_{j=1}^{m}\left(P_{j,1}\right)}{P_T - \sum_{j=1}^{m}\left(P_{j,2}\right)} \right) - \left(n_{HAP,2} - n_{HAP,1}\right) \right) \qquad \text{(Eq. 15)}$$

Where:

E = mass of HAP vapor displaced from the vessel being heated

N_{avg} = average gas space molar volume during the heating process, as calculated using Equation 16 of this subpart

P_T = total pressure in the vessel

$P_{i,1}$ = partial pressure of the individual HAP compounds at T_1

$P_{i,2}$ = partial pressure of the individual HAP compounds at T_2

MW_{HAP} = average molecular weight of the HAP compounds, as calculated using Equation 14 of this subpart

$n_{HAP,1}$ = number of moles of total HAP in the vessel headspace at T_1

$n_{HAP,2}$ = number of moles of total HAP in the vessel headspace at T_2

m = number of condensable VOC compounds (including HAP) in the emission stream

(*ii*) The average gas space molar volume during the heating process is calculated using Equation 16 of this subpart.

$$N_{avg} = \frac{VP_T}{2R}\left(\frac{1}{T_1} + \frac{1}{T_2}\right) \qquad \text{(Eq. 16)}$$

Where:

N_{avg} = average gas space molar volume during the heating process

V = volume of free space in vessel

P_T = total pressure in the vessel

R = ideal gas law constant

T_1 = initial temperature of the vessel contents, absolute

T_2 = final temperature of the vessel contents, absolute

(*iii*) The difference in the number of moles of total HAP in the vessel headspace between the initial and final temperatures is calculated using Equation 17 of this subpart.

$$\left(n_{HAP,2} - n_{HAP,1}\right) = \frac{V}{(R)(T_2)}\sum_{i=1}^{n} P_{i,2} - \frac{V}{(R)(T_1)}\sum_{i=1}^{n} P_{i,1} \qquad \text{(Eq. 17)}$$

Where:

$n_{HAP,2}$ = number of moles of total HAP in the vessel headspace at T_2

$_{HAP,1}$ = number of moles of total HAP in the vessel headspace at T_1

V = volume of free space in vessel

R = ideal gas law constant

T_1 = initial temperature of the vessel contents, absolute

T_2 = final temperature of the vessel contents, absolute

$P_{i,1}$ = partial pressure of the individual HAP compounds at T_1

$P_{i,2}$=partial pressure of the individual HAP compounds at T_2

n=number of HAP compounds in the emission stream

(E) *Depressurization*. Emissions from depressurization shall be calculated using the procedures in paragraphs (c)(2)(i)(E)(*1*) through (*5*) of this section. Alternatively, the owner or operator may elect to calculate emissions from depressurization using the procedures in paragraph (c)(2)(i)(E)(*6*) of this section.

(*1*) The moles of HAP vapor initially in the vessel are calculated using Equation 18 of this subpart:

$$n_{HAP} = \frac{V}{R\,T} \times \sum_{i=1}^{n} \left(P_i\right) \qquad \text{(Eq. 18)}$$

Where:

n_{HAP}=moles of HAP vapor in the vessel
P_i=partial pressure of each HAP in the vessel vapor space
V=free volume in the vessel being depressurized
R=ideal gas law constant
T=absolute temperature in vessel
n=number of HAP compounds in the emission stream

(*2*) The initial and final moles of noncondensable gas present in the vessel are calculated using Equations 19 and 20 of this subpart:

$$n_1 = \frac{VP_{nc_1}}{RT} \qquad \text{(Eq. 19)}$$

$$n_2 = \frac{VP_{nc_2}}{RT} \qquad \text{(Eq. 20)}$$

Where:

n_1=initial number of moles of noncondensable gas in the vessel
n_2=final number of moles of noncondensable gas in the vessel
V=free volume in the vessel being depressurized
P_{nc1}=initial partial pressure of the noncondensable gas, as calculated using Equation 21 of this subpart
P_{nc2}=final partial pressure of the noncondensable gas, as calculated using Equation 22 of this subpart
R=ideal gas law constant
T=temperature, absolute

(*3*) The initial and final partial pressures of the noncondensable gas in the vessel are determined using Equations 21 and 22 of this subpart.

$$P_{ncl} = P_1 - \sum_{j=1}^{m} \left(P_j *\right)\left(X_j\right) \qquad \text{(Eq. 21)}$$

$$P_{nc2} = P_2 - \sum_{j=1}^{m} \left(P_j *\right)\left(x_j\right) \qquad \text{(Eq. 22)}$$

where:

P_{nc1}=initial partial pressure of the noncondensable gas
P_{nc2}=final partial pressure of the noncondensable gas
P_1 = initial vessel pressure
P_2=final vessel pressure
P_{j*}=vapor pressure of each condensable VOC (including HAP) in the emission stream
X_j=mole fraction of each condensable VOC (including HAP) in the emission stream
m=number of condensable VOC compounds (including HAP) in the emission stream

(*4*) The moles of HAP emitted during the depressurization are calculated by taking an approximation of the average ratio of moles of HAP to moles of noncondensable and multiplying by the total moles of noncondensables released during the depressurization, using Equation 23 of this subpart:
Where:

$n_{HAP,e}$=moles of HAP emitted

$$n_{HAP,e} = \frac{\left(\frac{n_{HAP,1}}{n_1} + \frac{n_{HAP,2}}{n_2}\right)}{2}\left[n_1 - n_2\right] \qquad \text{(Eq. 23)}$$

$n_{HAP,1}$=moles of HAP vapor in vessel at the initial pressure, as calculated using Equation 18 of this subpart
$n_{HAP,2}$=moles of HAP vapor in vessel at the final pressure, as calculated using Equation 18 of this subpart
n_1=initial number of moles of noncondensable gas in the vessel, as calculated using Equation 19 of this subpart
n_2=final number of moles of noncondensable gas in the vessel, as calculated using Equation 19 of this subpart

(*5*) Use Equation 24 of this subpart to calculate the mass of HAP emitted:

$$E = n_{HAP,e} * MW_{HAP} \qquad \text{(Eq. 24)}$$

Where:

E=mass of HAP emitted
$n_{HAP,e}$=moles of HAP emitted, as calculated using Equation 23 of this subpart
MW_{HAP}=average molecular weight of the HAP as calculated using Equation 14 of this subpart

(*6*) As an alternative to the procedures in paragraphs (c)(2)(i)(E)(1) through (5) of this section, emissions from depressurization may be calculated using Equation 25 of this subpart:

$$E = \frac{V}{(R)\,(T)} \times \ln\left(\frac{P_1 - \sum_{j=1}^{m}(P_j)}{P_2 - \sum_{j=1}^{m}(P_j)}\right) \times \sum_{i=1}^{n}(P_i)\,(MW_i) \qquad \text{(Eq. 25)}$$

where:

V=free volume in vessel being depressurized
R=ideal gas law constant
T=temperature of the vessel, absolute
P_1=initial pressure in the vessel
P_2=final pressure in the vessel
P_i=partial pressure of the individual HAP compounds
P_j=partial pressure of individual condensable VOC compounds (including HAP)
MW_i=molecular weight of the individual HAP compounds
n=number of HAP compounds in the emission stream
m=number of condensable VOC compounds (including HAP) in the emission stream

(F) *Vacuum systems.* Calculate emissions from vacuum systems using Equation 26 of this subpart:

$$E = \frac{(MWs)(La)(t)}{MW_{nc}}\left(\frac{\sum_{i=1}^{n} P_i}{P_T - \sum_{j=1}^{m} P_j}\right) \qquad \text{(Eq. 26)}$$

Where:

E=mass of HAP emitted
P_T=absolute pressure of receiving vessel or ejector outlet conditions, if there is no receiver
P_i=partial pressure of individual HAP at the receiver temperature or the ejector outlet conditions
P_j=partial pressure of individual condensable VOC compounds (including HAP) at the receiver temperature or the ejector outlet conditions
L_a=total air leak rate in the system, mass/time
MW_{nc} = molecular weight of noncondensable gas
t=time of vacuum operation
MW_{HAP}=average molecular weight of HAP in the emission stream, as calculated using Equation 14 of this subpart, with HAP partial pressures calculated at the temperature of the receiver or ejector outlet, as appropriate
n=number of HAP components in the emission stream
m=number of condensable VOC compounds (including HAP) in the emission stream

(G) *Gas evolution.* Emissions from gas evolution shall be calculated using Equation 10 of this subpart with V calculated using Equation 27 of this subpart:

$$V = \frac{(W_g)(R)(T)}{(P_T)(MW_g)} \qquad \text{(Eq. 27)}$$

Where:

V=volumetric flow rate of gas evolution
W_g=mass flow rate of gas evolution
R=ideal gas law constant
T=temperature at the exit, absolute
P_T=vessel pressure
MW_g=molecular weight of the evolved gas

(H) *Air drying*. Use Equation 28 of this subpart to calculate emissions from air drying:

$$E = B \times \left(\frac{PS_1}{100 - PS_1} - \frac{PS_2}{100 - PS_2} \right) \qquad \text{(Eq. 28)}$$

Where:

E=mass of HAP emitted
B=mass of dry solids
PS_1=HAP in material entering dryer, weight percent
PS_2=HAP in material exiting dryer, weight percent.

(ii) *Engineering assessments*. The owner or operator shall conduct an engineering assessment to determine uncontrolled HAP emissions for each emission episode that is not due to vapor displacement, purging, heating, depressurization, vacuum systems, gas evolution, or air drying. For a given emission episode caused by any of these seven types of activities, the owner or operator also may request approval to determine uncontrolled HAP emissions based on an engineering assessment. All data, assumptions, and procedures used in the engineering assessment shall be documented in the Precompliance plan in accordance with § 63.1367(b). An engineering assessment includes, but is not limited to, the information and procedures described in paragraphs (c)(2)(ii)(A) through (D) of this section:

(A) Test results, provided the tests are representative of current operating practices at the process unit. If test data show a greater than 20 percent discrepancy between the test value and the estimated value, the owner or operator may estimate emissions based on the test data, and the results of the engineering assessment shall be included in the Notification of Compliance Status report.

(B) Bench-scale or pilot-scale test data representative of the process under representative operating conditions.

(C) Maximum flow rate, HAP emission rate, concentration, or other relevant parameter specified or implied within a permit limit applicable to the process vent.

(D) Design analysis based on accepted chemical engineering principles, measurable process parameters, or physical or chemical laws or properties. Examples of analytical methods include, but are not limited to:

(*1*) Use of material balances based on process stoichiometry to estimate maximum organic HAP concentrations;

(*2*) Estimation of maximum flow rate based on physical equipment design such as pump or blower capacities; and

(*3*) Estimation of HAP concentrations based on saturation conditions.

(3) *Controlled emissions*. Except for condensers, the owner or operator shall determine controlled emissions using the procedures in either paragraph (c)(3)(i) or (ii) of this section, as applicable. For condensers, controlled emissions shall be calculated using the emission estimation equations described in paragraph (c)(3)(iii) of this section. The owner or operator is not required to calculate controlled emissions from devices described in paragraph (a)(4) of this section or from flares for which compliance is demonstrated in accordance with paragraph (a)(3) of this section. If the owner or operator is complying with an outlet concentration standard and the control device uses supplemental gases, the outlet concentrations shall be corrected in accordance with the procedures described in paragraph (a)(7) of this section.

(i) *Small control devices, except condensers*. Controlled emissions for each process vent that is controlled using a small control device, except for a condenser, shall be determined by using the design evaluation described in paragraph (c)(3)(i)(A) of this section, or by conducting a performance test in

accordance with paragraph (c)(3)(ii) of this section.

(A) *Design evaluation.* The design evaluation shall include documentation demonstrating that the control device being used achieves the required control efficiency under absolute or hypothetical peak-case conditions, as determined from the emission profile described in paragraph (b)(11)(iii) of this section. The control efficiency determined from this design evaluation shall be applied to uncontrolled emissions to estimate controlled emissions. The documentation must be conducted in accordance with the provisions in paragraph (a)(1) of this section. The design evaluation shall also include the value(s) and basis for the parameter(s) monitored under §63.1366.

(B) Whenever a small control device becomes a large control device, the owner or operator must comply with the provisions in paragraph (c)(3)(ii) of this section and submit the test report in the next Periodic report.

(ii) *Large control devices, except condensers.* Controlled emissions for each process vent that is controlled using a large control device, except for a condenser, shall be determined by applying the control efficiency of the large control device to the estimated uncontrolled emissions. The control efficiency shall be determined by conducting a performance test on the control device as described in paragraphs (c)(3)(ii)(A) through (C) of this section, or by using the results of a previous performance test as described in paragraph (c)(3)(ii)(D) of this section. If the control device is intended to control only HCl and chlorine, the owner or operator may assume the control efficiency of organic HAP is 0 percent. If the control device is intended to control only organic HAP, the owner or operator may assume the control efficiency for HCl and chlorine is 0 percent.

(A) Except for control devices that are intended to meet outlet TOC or HCl and chlorine concentrations of 20 ppmv, the performance test shall be conducted by performing emission testing on the inlet and outlet of the control device following the test methods and procedures of paragraph (b) of this section. For control devices that meet outlet TOC or HCl and chlorine concentrations of 20 ppmv, the performance testing shall be conducted by performing emission testing on the outlet of the control device following the test methods and procedures of paragraph (b) of this section. Concentrations shall be calculated from the data obtained through emission testing according to the procedures in paragraph (a)(2) of this section.

(B) Performance testing shall be conducted under absolute or hypothetical peak-case conditions, as defined in paragraphs (b)(11)(i) and (ii) of this section.

(C) The owner or operator may elect to conduct more than one performance test on the control device for the purpose of establishing more than one operating condition at which the control device achieves the required control efficiency.

(D) The owner or operator is not required to conduct a performance test for any control device for which a previous performance test was conducted, provided the test was conducted using the same procedures specified in paragraphs (b)(1) through (11) of this section over conditions typical of the absolute or hypothetical peak-case, as defined in paragraphs (b)(11)(i) and (ii) of this section. The results of the previous performance test shall be used to demonstrate compliance.

(iii) *Condensers.* The owner or operator using a condenser as a control device shall determine controlled emissions using exhaust gas temperature measurements and calculations for each batch emission episode according to the engineering methodology in paragraphs (c)(3)(iii)(A) through (G) of this section. Individual HAP partial pressures shall be calculated as specified in paragraph (c)(2)(i) of this section.

(A) Emissions from vapor displacement due to transfer of material to a vessel shall be calculated using Equation 9 of this subpart with T set equal to the temperature of the receiver and the HAP partial pressures determined at the temperature of the receiver.

(B) Emissions from purging shall be calculated using Equation 10 of this subpart with T set equal to the temperature of the receiver and the HAP

partial pressures determined at the temperature of the receiver.

(C) Emissions from heating shall be calculated using Equation 29 of this subpart. In Equation 29 of this subpart, $\Delta\eta$ is equal to the number of moles of noncondensable displaced from the vessel, as calculated using Equation 12 of this subpart. In Equation 29 of this subpart, the HAP average molecular weight shall be calculated using Equation 14 with the HAP partial pressures determined at the temperature of the receiver.

$$E = \Delta\eta \times \frac{\sum_{i=1}^{n} P_i}{P_T - \sum_{j=1}^{m} P_j} \times MW_{HAP} \qquad \text{(Eq. 29)}$$

Where:

E=mass of HAP emitted

$\Delta\eta$=moles of noncondensable gas displaced

P_T=pressure in the receiver

P_i=partial pressure of the individual HAP at the receiver temperature

P_j=partial pressure of the individual condensable VOC (including HAP) at the receiver temperature

n=number of HAP compounds in the emission stream

MW_{HAP}=the average molecular weight of HAP in vapor exiting the receiver, as calculated using Equation 14 of this subpart

m=number of condensable VOC (including HAP) in the emission stream

(D)(*1*) Emissions from depressurization shall be calculated using Equation 30 of this subpart.

$$E = \left(V_{nc1} - V_{nc2}\right) \times \frac{\sum_{i=1}^{n} \left(P_i\right)}{P_T - \sum_{j=1}^{m} \left(P_j\right)} \times \frac{P_T}{RT} \times MW_{HAP} \qquad \text{(Eq. 30)}$$

Where:

E=mass of HAP vapor emitted

V_{nc1}=initial volume of noncondensable in the vessel, corrected to the final pressure, as calculated using Equation 31 of this subpart

V_{nc2}=final volume of noncondensable in the vessel, as calculated using Equation 32 of this subpart

P_i=partial pressure of each individual HAP at the receiver temperature

P_j=partial pressure of each condensable VOC (including HAP) at the receiver temperature

P_T=receiver pressure

T=temperature of the receiver, absolute

R=ideal gas law constant

MW_{HAP}=the average molecular weight of HAP calculated using Equation 14 of this subpart with partial pressures determined at the receiver temperature

n=number of HAP compounds in the emission stream

m=number of condensable VOC (including HAP) in the emission stream

(2) The initial and final volumes of noncondensable gas present in the vessel, adjusted to the pressure of the receiver, are calculated using Equations 31 and 32 of this subpart.

$$V_{ncl} = \frac{VP_{nc_1}}{P_T} \qquad \text{(Eq. 31)}$$

$$V_{nc2} = \frac{VP_{nc_2}}{P_T} \qquad \text{(Eq. 32)}$$

Where:

V_{nc1}=initial volume of noncondensable gas in the vessel
V_{nc2}=final volume of noncondensable gas in the vessel
V=free volume in the vessel being depressurized
P_{nc1}=initial partial pressure of the noncondensable gas, as calculated using Equation 33 of this subpart
P_{nc2}=final partial pressure of the noncondensable gas, as calculated using Equation 34 of this subpart
P_T=pressure of the receiver

(3) Initial and final partial pressures of the noncondensable gas in the vessel are determined using Equations 33 and 34 of this subpart.

$$P_{nc1} = P_1 - \sum_{j=1}^{m} P_j \qquad \text{(Eq. 33)}$$

$$P_{nc2} = P_2 - \sum_{j=1}^{m} P_j \qquad \text{(Eq. 34)}$$

Where:

P_{nc1}=initial partial pressure of the noncondensable gas in the vessel
P_{nc2}=final partial pressure of the noncondensable gas in the vessel
P_1=initial vessel pressure
P_2=final vessel pressure
P_j=partial pressure of each condensable VOC (including HAP) in the vessel
m=number of condensable VOC (including HAP) in the emission stream

(E) Emissions from vacuum systems shall be calculated using Equation 26 of this subpart.

(F) Emissions from gas evolution shall be calculated using Equation 8 with V calculated using Equation 27 of this subpart, T set equal to the receiver temperature, and the HAP partial pressures determined at the receiver temperature. The term for time, t, in Equation 10 of this subpart is not needed for the purposes of this calculation.

(G) Emissions from air drying shall be calculated using Equation 9 of this subpart with V equal to the air flow rate and P_i determined at the receiver temperature.

(d) *Initial compliance with storage vessel provisions*. The owner or operator of an existing or new affected source shall demonstrate initial compliance with the storage vessel standards in §63.1362(c)(2) through (4) by fulfilling the requirements in either paragraph (d)(1), (2), (3), (4), (5), or (6) of this section, as applicable. The owner or operator shall demonstrate initial compliance with the planned routine maintenance provision in §63.1362(c)(5) by fulfilling the requirements in paragraph (d)(7) of this section.

(1) *Percent reduction requirement for control devices*. If the owner or operator equips a Group 1 storage vessel with a closed vent system and control device, the owner or operator shall demonstrate initial compliance with the percent reduction requirement of §63.1362(c)(2)(iv)(A) or (c)(3) either by calculating the efficiency of the control device using performance test data as specified in paragraph (d)(1)(i) of this section, or by preparing a design evaluation as specified in paragraph (d)(1)(ii) of this section.

(i) *Performance test option*. If the owner or operator elects to demonstrate initial compliance based on performance test data, the efficiency of the control device shall be calculated as specified in paragraphs (d)(1)(i)(A) through (D) of this section.

(A) At the reasonably expected maximum filling rate, Equations 35 and 36 of this subpart shall be used to calculate the mass rate of total organic HAP at the inlet and outlet of the control device.

$$E_i = K_2\left(\sum_{j=1}^{n} C_{ij}M_{ij}\right)Q_i \qquad \text{(Eq. 35)}$$

$$E_o = K_2\left(\sum_{j=1}^{n} C_{oj}M_{oj}\right)Q_o \qquad \text{(Eq. 36)}$$

Where:

C_{ij}, C_{oj}=concentration of sample component j of the gas stream at the inlet and outlet of the control device, respectively, dry basis, ppmv
E_i, E_o=mass rate of total organic HAP at the inlet and outlet of the control device, respectively, dry basis, kg/hr
M_{ij}, M_{oj}=molecular weight of sample component j of the gas stream at the inlet and outlet of the control device, respectively, g/gmole

Q_i, Q_o=flow rate of gas stream at the inlet and outlet of the control device, respectively, dscmm

K_2=constant, 2.494×10^{-6} (parts per million)$^{-1}$ (gram-mole per standard cubic meter) (kilogram/gram) (minute/hour), where standard temperature is 20 °C

(B) The percent reduction in total organic HAP shall be calculated using Equation 37 of this subpart:

$$R = \frac{E_i - E_o}{E_i}(100) \qquad \text{(Eq. 37)}$$

Where:

R=control efficiency of control device, percent

E_i=mass rate of total organic HAP at the inlet to the control device as calculated under paragraph (d)(1)(i)(A) of this section, kilograms organic HAP per hour

E_o=mass rate of total organic HAP at the outlet of the control device, as calculated under paragraph (d)(1)(i)(A) of this section, kilograms organic HAP per hour

(C) A performance test is not required to be conducted if the control device used to comply with § 63.1362(c) (storage tank provisions) is also used to comply with § 63.1362(b) (process vent provisions), provided compliance with § 63.1362(b) is demonstrated in accordance with paragraph (c) of this section and the demonstrated percent reduction is equal to or greater than 95 percent.

(D) A performance test is not required for any control device for which a previous test was conducted, provided the test was conducted using the same procedures specified in paragraph (b) of this section.

(ii) *Design evaluation option.* If the owner or operator elects to demonstrate initial compliance by conducting a design evaluation, the owner or operator shall prepare documentation in accordance with the design evaluation provisions in paragraph (a)(1) of this section, as applicable. The design evaluation shall demonstrate that the control device being used achieves the required control efficiency when the storage vessel is filled at the reasonably expected maximum filling rate.

(2) *Outlet concentration requirement for control devices.* If the owner or operator equips a Group 1 storage vessel with a closed vent system and control device, the owner or operator shall demonstrate initial compliance with the outlet concentration requirements of § 63.1362(c)(2)(iv)(B) or (c)(3) by fulfilling the requirements of paragraph (a)(6) of this section.

(3) *Floating roof.* If the owner or operator equips a Group 1 storage vessel with a floating roof to comply with the provisions in § 63.1362(c)(2) or (c)(3), the owner or operator shall demonstrate initial compliance by complying with the procedures described in paragraphs (d)(3)(i) and (ii) of this section.

(i) Comply with § 63.119(b), (c), or (d) of subpart G of this part, as applicable, with the differences specified in § 63.1362(d)(2)(i) through (iii).

(ii) Comply with the procedures described in § 63.120(a), (b), or (c) of subpart G of this part, as applicable, with the differences specified in § 63.1362(d)(2)(i), (iv), and (v).

(4) *Flares.* If the owner or operator controls the emissions from a Group 1 storage vessel with a flare, initial compliance is demonstrated by fulfilling the requirements in paragraph (a)(3) of this section.

(5) *Exemptions from initial compliance.* No initial compliance demonstration is required for control devices specified in paragraph (a)(4) of this section.

(6) *Initial compliance with alternative standard.* If the owner or operator equips a Group 1 storage vessel with a closed-vent system and control device, the owner or operator shall demonstrate initial compliance with the alternative standard in § 63.1362(c)(4) by fulfilling the requirements of paragraph (a)(5) of this section.

(7) *Planned routine maintenance.* The owner or operator shall demonstrate initial compliance with the planned routine maintenance provisions of § 63.1362(c)(5) by including the anticipated periods of planned routine maintenance for the first reporting period in the Notification of Compliance Status report as specified in § 63.1368(f).

(e) *Initial compliance with wastewater provisions.* The owner or operator shall demonstrate initial compliance with the wastewater requirements by complying with the applicable provisions in § 63.145 of subpart G of this part, except that the owner or operator need not

comply with the requirement to determine visible emissions that is specified in §63.145(j)(1) of subpart G of this part, and references to compounds in Table 8 of subpart G of this part are not applicable for the purposes of this subpart.

(f) *Initial compliance with the bag dump and product dryer provisions.* Compliance with the particulate matter concentration limits specified in §63.1362(e) is demonstrated when the concentration of particulate matter is less than 0.01 gr/dscf, as measured using the method described in paragraph (b)(7) of this section.

(g) *Initial compliance with the pollution prevention alternative standard.* The owner or operator shall demonstrate initial compliance with §63.1362(h)(2) and (3) for a PAI process unit by preparing the demonstration summary in accordance with paragraph (g)(1) of this section and by calculating baseline and target annual HAP and VOC factors in accordance with paragraphs (g)(2) and (3) of this section. To demonstrate initial compliance with §63.1362(h)(3), the owner or operator must also comply with the procedures for add-on control devices that are specified in paragraph (g)(4) of this section.

(1) *Demonstration summary.* The owner or operator shall prepare a pollution prevention demonstration summary that shall contain, at a minimum, the information in paragraphs (g)(1)(i) through (iii) of this section. The demonstration summary shall be included in the Precompliance report as specified in §63.1368(e)(4).

(i) Descriptions of the methodologies and forms used to measure and record consumption of HAP and VOC compounds.

(ii) Descriptions of the methodologies and forms used to measure and record production of the product(s).

(iii) Supporting documentation for the descriptions provided in accordance with paragraphs (g)(1)(i) and (ii) of this section including, but not limited to, operator log sheets and copies of daily, monthly, and annual inventories of materials and products. The owner or operator must show how this documentation will be used to calculate the annual factors required in §63.1366(f)(1).

(2) *Baseline factors.* The baseline HAP and VOC factors shall be calculated by dividing the consumption of total HAP and total VOC by the production rate, per process, for the first 3-year period in which the process was operational, beginning no earlier than the period consisting of the 1987 through 1989 calendar years. Alternatively, for a process that has been operational for less than 3 years, but more than 1 year, the baseline factors shall be established for the time period from startup of the process until the present.

(3) *Target annual factors.* The owner or operator must calculate target annual factors in accordance with either paragraph (g)(3)(i) or (ii) of this section.

(i) To demonstrate initial compliance with §63.1362(h)(2), the target annual HAP factor must be equal to or less than 15 percent of the baseline HAP factor. For each reduction in a HAP that is also a VOC, the target annual VOC factor must be lower than the baseline VOC factor by an equivalent amount on a mass basis. For each reduction in a HAP that is not a VOC, the target annual factor must be equal to or less than the baseline VOC factor.

(ii) To demonstrate initial compliance with §63.1362(h)(3)(i), the target annual HAP and VOC factors must be calculated as specified in paragraph (g)(3)(i) of this section, except that when ''15 percent'' is referred to in paragraph (g)(3)(i) of this section, ''50 percent'' shall apply for the purposes of this paragraph.

(4) *Requirements for add-on control devices.* Initial compliance with the requirements for add-on control devices in §63.1362(h)(3)(ii) is demonstrated when the requirements in paragraphs (g)(4)(i) through (iii) of this section are met.

(i) The yearly reductions associated with add-on controls that meet the criteria of §63.1362(h)(3)(ii)(A) through (D), must be equal to or greater than the amounts calculated using Equations 38 and 39 of this subpart:

$$HAP_{reduced} = \left(HF_{base}\right)\left(0.85 - R_{P2}\right)\left(M_{prod}\right) \qquad \text{(Eq. 38)}$$

$$VOC_{reduced} = \left(VF_{base} - VF_{P2} - VF_{annual}\right) \times M_{prod} \qquad \text{(Eq. 39)}$$

Where:

$HAP_{reduced}$ = the annual HAP emissions reduction required by add-on controls, kg/yr
HF_{base} = the baseline HAP factor, kg HAP consumed/kg product
R_{P2} = the fractional reduction in the annual HAP factor achieved using pollution prevention where R_{P2} is ≥0.5
$VOC_{reduced}$ = required VOC emission reduction from add-on controls, kg/yr
VF_{base} = baseline VOC factor, kg VOC emitted/kg production
VF_{P2} = reduction in VOC factor achieved by pollution prevention, kg VOC emitted/kg production
VF_{annual} = target annual VOC factor, kg VOC emitted/kg production
M_{prod} = production rate, kg/yr

(ii) Demonstration that the criteria in § 63.1362(i)(3)(ii)(A) through (D) are met shall be accomplished through a description of the control device and of the material streams entering and exiting the control device.

(iii) The annual reduction achieved by the add-on control shall be quantified using the methods described in paragraph (c) of this section.

(h) *Compliance with emissions averaging provisions.* An owner or operator shall demonstrate compliance with the emissions averaging provisions of § 63.1362(h) by fulfilling the requirements of paragraphs (h)(1) through (6) of this section.

(1) The owner or operator shall develop and submit for approval an Emissions Averaging Plan containing all the information required in § 63.1367(d). The Emissions Averaging Plan shall be submitted no later than 18 months prior to the compliance date of the standard. The Administrator shall determine within 120 calendar days whether the Emissions Averaging Plan submitted by sources using emissions averaging presents sufficient information. The Administrator shall either approve the Emissions Averaging Plan, request changes, or request that the owner or operator submit additional information. Once the Administrator receives sufficient information, the Administrator shall approve, disapprove, or request changes to the plan within 120 days. If the Emissions Averaging Plan is disapproved, the owner or operator must still be in compliance with the standard by the compliance date.

(2) For all points included in an emissions average, the owner or operator shall comply with the procedures that are specified in paragraphs (h)(2)(i) through (v) of this section.

(i) Calculate and record monthly debits for all Group 1 emission points that are controlled to a level less stringent than the standard for those emission points. Equations in paragraph (h)(5) of this section shall be used to calculate debits.

(ii) Calculate and record monthly credits for all Group 1 and Group 2 emission points that are overcontrolled to compensate for the debits. Equations in paragraph (h)(6) of this section shall be used to calculate credits. All process vent, storage vessel, and wastewater emission points except those specified in § 63.1362(h)(1) through (6) may be included in the credit calculation.

(iii) Demonstrate that annual credits calculated according to paragraph (h)(6) of this section are greater than or equal to debits calculated according to paragraph (h)(5) of this section for the same annual compliance period. The initial demonstration in the Emissions Averaging Plan or operating permit application that credit-generating emission points will be capable of generating sufficient credits to offset the debit-generating emission points shall be made under representative operating conditions. After the compliance date, actual operating data shall be used for all debit and credit calculations.

(iv) Demonstrate that debits calculated for a quarterly (3-month) period according to paragraph (h)(5) of this section are not more than 1.30 times the credits for the same period calculated according to paragraph

(h)(6) of this section. Compliance for the quarter shall be determined based on the ratio of credits and debits from that quarter, with 30 percent more debits than credits allowed on a quarterly basis.

(v) Record and report quarterly and annual credits and debits as required in §§63.1367(d) and 63.1368(d).

(3) Credits and debits shall not include emissions during periods of malfunction. Credits and debits shall not include periods of startup and shutdown for continuous processes.

(4) During periods of monitoring excursions, credits and debits shall be adjusted as specified in paragraphs (h)(4)(i) through (iii) of this section.

(i) No credits shall be assigned to the credit-generating emission point.

(ii) Maximum debits shall be assigned to the debit-generating emission point.

(iii) The owner or operator may demonstrate to the Administrator that full or partial credits or debits should be assigned using the procedures in §63.150(l) of subpart G of this part.

(5) Debits are generated by the difference between the actual emissions from a Group 1 emission point that is uncontrolled or controlled to a level less stringent than the applicable standard and the emissions allowed for the Group 1 emission point. Debits shall be calculated in accordance with the procedures specified in paragraphs (h)(5)(i) through (iv) of this section.

(i) Source-wide debits shall be calculated using Equation 40 of this subpart.

Debits and all terms of Equation 40 of this subpart are in units of Mg/month

Where:

$$\text{Debits} = \sum_{i=1}^{n}\left[EPV_{iA} - (0.10)(EPV_{iU})\right] + \sum_{i=1}^{n}\left[ES_{iA} - (0.05)(ES_{iU})\right] + \sum_{i=1}^{n}\left[EWW_{iA} - (EWW_{iC})\right] \qquad \text{(Eq. 40)}$$

EPV_{iU} = uncontrolled emissions from process i calculated according to the procedures specified in paragraph (h)(5)(ii) of this section

EPV_{iA} = actual emissions from each Group 1 process i that is uncontrolled or is controlled to a level less stringent than the applicable standard. EPV_{iA} is calculated using the procedures in paragraph (h)(5)(ii) of this section

ES_{iU} = uncontrolled emissions from storage vessel i calculated according to the procedures specified in paragraph (h)(5)(iii) of this section

ES_{iA} = actual emissions from each Group 1 storage vessel i that is uncontrolled or is controlled to a level less stringent than the applicable standard. ES_{iA} is calculated using the procedures in paragraph (h)(5)(iii) of this section

EWW_{iC} = emissions from each Group 1 wastewater stream i if the standard had been applied to the uncontrolled emissions. EWW_{iC} is calculated using the procedures in paragraph (h)(5)(iv) of this section

EWW_{iA} = actual emissions from each Group 1 wastewater stream i that is uncontrolled or is controlled to a level less stringent than the applicable standard. EWW_{iA} is calculated using the procedures in paragraph (h)(5)(iv) of this section

n = the number of emission points being included in the emissions average; the value of n is not necessarily the same for process vents, storage tanks, and wastewater

(ii) Emissions from process vents shall be calculated in accordance with the procedures specified in paragraphs (h)(5)(ii)(A) through (C) of this section.

(A) Except as provided in paragraph (h)(5)(ii)(C) of this section, uncontrolled emissions for process vents shall be calculated using the procedures that are specified in paragraph (c)(2) of this section.

(B) Except as provided in paragraph (h)(5)(ii)(C) of this section, actual emissions for process vents shall be calculated using the procedures specified in paragraphs (c)(2) and (c)(3) of this section, as applicable.

(C) As an alternative to the procedures described in paragraphs (h)(5)(ii)(A) and (B) of this section, for continuous processes, uncontrolled and actual emissions may be calculated by the procedures described in §63.150(g)(2) of subpart G of this part. For purposes of complying with this paragraph, a 90 percent reduction shall apply instead of the 98 percent reduction in §63.150(g)(2)(iii) of subpart G of this

part, and the term ''process condenser'' shall apply instead of the term ''recovery device'' in § 63.150(g)(2) for the purposes of this subpart.

(iii) Uncontrolled emissions from storage vessels shall be calculated in accordance with the procedures described in paragraph (d)(1) of this section. Actual emissions from storage vessels shall be calculated using the procedures specified in § 63.150(g)(3)(ii), (iii), or (iv) of subpart G of this subpart, as appropriate, except that when § 63.150(g)(3)(ii)(B) refers to the procedures in § 63.120(d) for determining percent reduction for a control device, § 63.1365(d)(2) or (3) shall apply for the purposes of this subpart.

(iv) Emissions from wastewater shall be calculated using the procedures specified in § 63.150(g)(5) of subpart G of this part.

(6) Credits are generated by the difference between emissions that are allowed for each Group 1 and Group 2 emission point and the actual emissions from that Group 1 or Group 2 emission point that have been controlled after November 15, 1990 to a level more stringent than what is required in this subpart or any other State or Federal rule or statute. Credits shall be calculated in accordance with the procedures specified in paragraphs (h)(6)(i) through (v) of this section.

(i) Source-wide credits shall be calculated using Equation 41 of this subpart. Credits and all terms in Equation 41 of this subpart are in units of Mg/month, the baseline date is November 15, 1990, the terms consisting of a constant multiplied by the uncontrolled emissions are the emissions from each emission point subject to the standards in § 63.1362(b) and (c) that is controlled to a level more stringent than the standard.

Where:

$$\text{Credits} = D\sum_{i=1}^{n}\left[(0.10)\left(EPV1_{iU}\right) - EPV1_{iA}\right] + D\sum_{i=1}^{m}\left(EPV2_{iB} - EPV2_{iA}\right) + D\sum_{i=1}^{n}\left[(0.05)\left(ES1_{iU}\right) - ES1_{iA}\right] + D\sum_{i=1}^{m}\left(ES2_{iB} - ES2_{iA}\right) + D\sum_{i=1}^{n}\left(EWW1_{iC} - EWW1_{iA}\right) + D\sum_{i=1}^{m}\left(EWW2_{iB} - EWW2_{iA}\right) \qquad \text{(Eq. 41)}$$

$EPV1_{iU}$ = uncontrolled emissions from each Group 1 process i calculated according to the procedures in paragraph (h)(6)(iii)(A) of this section

$EPV1_{iA}$ = actual emissions from each Group 1 process i that is controlled to a level more stringent than the applicable standard. $EPV1_{iA}$ is calculated according to the procedures in paragraph (h)(6)(iii)(B) of this section

$EPV2_{iB}$ = emissions from each Group 2 process i at the baseline date. $EPV2_{iB}$ is calculated according to the procedures in paragraph (h)(6)(iii)(C) of this section

$EPV2_{iA}$ = actual emissions from each Group 2 process i that is controlled. $EPV2_{iA}$ is calculated according to the procedures in paragraph (h)(6)(iii)(C) of this section

$ES1_{iU}$ = uncontrolled emissions from each Group 1 storage vessel i calculated according to the procedures in paragraph (h)(6)(iv) of this section

$ES1_{iA}$ = actual emissions from each Group 1 storage vessel i that is controlled to a level more stringent that the applicable standard. $ES1_{iA}$ is calculated according to the procedures in paragraph (h)(6)(iv) of this section

$ES2_{iB}$ = emissions from each Group 2 storage vessel i at the baseline date. $ES2_{iB}$ is calculated according to the procedures in paragraph (h)(6)(iv) of this section

$ES2_{iA}$ = actual emissions from each Group 2 storage vessel i that is controlled. $ES2_{iA}$ is calculated according to the procedures in paragraph (h)(6)(iv) of this section

$EWW1_{iC}$ = emissions from each Group 1 wastewater stream i if the standard had been applied to the uncontrolled emissions. $EWW1_{iC}$ is calculated according to the procedures in paragraph (h)(6)(v) of this section

$EWW1_{iA}$= emissions from each Group 1 wastewater stream i that is controlled to a level more stringent that the applicable standard. $EWW1_{iA}$ is calculated according to the procedures in paragraph (h)(6)(v) of this section

$EWW2_{iB}$ = emissions from each Group 2 wastewater stream i at the baseline date. $EWW2_{iB}$ is calculated according to the procedures in paragraph (h)(6)(v) of this section

$EWW2_{iA}$ = actual emissions from each Group 2 wastewater stream i that is controlled. $EWW2_{iA}$ is calculated according to the procedures in paragraph (h)(6)(v) of this section

n = number of Group 1 emission points that are included in the emissions average. The value of n is not necessarily the same for process vents, storage tanks, and wastewater

m = number of Group 2 emission points included in the emissions average. The value of m is not necessarily the same for process vents, storage tanks, and wastewater

D = discount factor equal to 0.9 for all credit-generating emission points except those controlled by a pollution prevention measure, which will not be discounted

(ii) For an emission point controlled using a pollution prevention measure, the nominal efficiency for calculating credits shall be as determined as described in §63.150(j) of subpart G of this part.

(iii) Emissions from process vents shall be calculated in accordance with the procedures specified in paragraphs (h)(6)(iii)(A) through (C) of this section.

(A) Uncontrolled emissions from Group 1 process vents shall be calculated according to the procedures in paragraph (h)(5)(ii)(A) or (C) of this section.

(B) Actual emissions from Group 1 process vents with a nominal efficiency greater than the applicable standard or a pollution prevention measure that achieves reductions greater than the applicable standard shall be calculated using Equation 42 of this subpart:

$$EPV1_{iA} = EPV1_{iU} \times \left[1 - N_{eff}/100\right] \qquad \text{(Eq. 42)}$$

Where:

$EPV1_{iA}$ = actual emissions from each Group 1 process i that is controlled to a level more stringent than the applicable standard

$EPV1_{iU}$ = uncontrolled emissions from each Group 1 process i

N_{eff} = nominal efficiency of control device or pollution prevention measure, percent

(C) Baseline and actual emissions from Group 2 process vents shall be calculated according to the procedures in §63.150(h)(2)(iii) and (iv) with the following modifications:

(*1*) The term ''90 percent reduction'' shall apply instead of the term ''98 percent reduction''; and

(*2*) When the phrase ''paragraph (g)(2)'' is referred to in §63.150(h)(2)(iii) and (iv), the provisions in paragraph (h)(5)(ii) of this section shall apply for the purposes of this subpart.

(iv) Uncontrolled emissions from storage vessels shall be calculated according to the procedures described in paragraph (d)(1) of this section. Actual and baseline emissions from storage tanks shall be calculated according to the procedures specified in §63.150(h)(3) of subpart G of this part, except when §63.150(h)(3) refers to §63.150(g)(3)(i), paragraph (d)(1) of this section shall apply for the purposes of this subpart.

(v) Emissions from wastewater shall be calculated using the procedures in §63.150(h)(5) of subpart G of this part.

§63.1366 Monitoring and inspection requirements.

(a) To provide evidence of continued compliance with the standard, the owner or operator of any existing or new affected source shall install, operate, and maintain monitoring devices as specified in this section. During the initial compliance demonstration, maximum or minimum operating parameter levels, or other design and operating characteristics, as appropriate, shall be established for emission sources that will indicate the source is in compliance. Test data, calculations, or information from the evaluation of the control device design, as applicable, shall be used to establish the operating parameter level or characteristic.

(b) *Monitoring for control devices.* (1) *Parameters to monitor.* Except as specified in paragraph (b)(1)(i) of this section, for each control device, the owner or operator shall install and operate monitoring devices and operate within

the established parameter levels to ensure continued compliance with the standard. Monitoring parameters are specified for control scenarios in paragraphs (b)(1)(ii) through (xii) of this section, and are summarized in Table 3 of this subpart.

(i) *Periodic verification.* For control devices that control vent streams containing total HAP emissions less than 0.91 Mg/yr, before control, monitoring shall consist of a periodic verification that the device is operating properly. This verification shall include, but not be limited to, a daily or more frequent demonstration that the unit is working as designed and may include the daily measurements of the parameters described in paragraphs (b)(1)(ii) through (xii) of this section. This demonstration shall be included in the Precompliance plan, to be submitted 6 months prior to the compliance date of the standard.

(ii) *Scrubbers.* For affected sources using liquid scrubbers, the owner or operator shall establish a minimum scrubber liquid flow rate or pressure drop as a site-specific operating parameter which must be measured and recorded at least once every 15 minutes during the period in which the scrubber is controlling HAP from an emission stream as required by the standards in § 63.1362. If the scrubber uses a caustic solution to remove acid emissions, the pH of the effluent scrubber liquid shall also be monitored once a day. The minimum scrubber liquid flow rate or pressure drop shall be based on the conditions under which the initial compliance demonstration was conducted.

(A) The monitoring device used to determine the pressure drop shall be certified by the manufacturer to be accurate to within a gage pressure of ±10 percent of the maximum pressure drop measured.

(B) The monitoring device used for measurement of scrubber liquid flowrate shall be certified by the manufacturer to be accurate to within ±10 percent of the design scrubber liquid flowrate.

(C) The monitoring device shall be calibrated annually.

(iii) *Condensers.* For each condenser, the owner or operator shall establish the maximum condenser outlet gas temperature as a site-specific operating parameter which must be measured and recorded at least once every 15 minutes during the period in which the condenser is controlling HAP from an emission stream as required by the standards in § 63.1362.

(A) The temperature monitoring device must be accurate to within ±2 percent of the temperature measured in degrees Celsius or ±2.5 °C, whichever is greater.

(B) The temperature monitoring device must be calibrated annually.

(iv) *Regenerative carbon adsorbers.* For each regenerative carbon adsorber, the owner or operator shall comply with the provisions in paragraphs (b)(1)(iv)(A) through (F) of this section.

(A) Establish the regeneration cycle characteristics specified in paragraphs (b)(1)(iv)(A) (*1*) through (*4*) of this section under absolute or hypothetical peak-case conditions, as defined in § 63.1365(b)(11)(i) or (ii).

(*1*) Minimum regeneration frequency (i.e., operating time since last regeneration);

(*2*) Minimum temperature to which the bed is heated during regeneration;

(*3*) Maximum temperature to which the bed is cooled, measured within 15 minutes of completing the cooling phase; and

(*4*) Minimum regeneration stream flow.

(B) Monitor and record the regeneration cycle characteristics specified in paragraphs (b)(1)(iv)(B) (*1*) through (*4*) of this section for each regeneration cycle.

(*1*) Regeneration frequency (i.e., operating time since end of last regeneration);

(*2*) Temperature to which the bed is heated during regeneration;

(*3*) Temperature to which the bed is cooled, measured within 15 minutes of the completion of the cooling phase; and

(*4*) Regeneration stream flow.

(C) Use a temperature monitoring device that is accurate to within ±2 percent of the temperature measured in degrees Celsius or ±2.5 °C, whichever is greater.

(D) Use a regeneration stream flow monitoring device capable of recording the total regeneration stream flow to

within ±10 percent of the established value (i.e., accurate to within ±10 percent of the reading).

(E) Calibrate the temperature and flow monitoring devices annually.

(F) Conduct an annual check for bed poisoning in accordance with manufacturer's specifications.

(v) *Nonregenerative carbon adsorbers.* For each nonregenerative carbon adsorption system such as a carbon canister that does not regenerate the carbon bed directly onsite in the control device, the owner or operator shall replace the existing carbon bed in the control device with fresh carbon on a regular schedule based on one of the following procedures:

(A) Monitor the TOC concentration level in the exhaust vent stream from the carbon adsorption system on a regular schedule, and replace the existing carbon with fresh carbon immediately when carbon breakthrough is indicated. The monitoring frequency shall be daily or at an interval no greater than 20 percent of the time required to consume the total carbon working capacity under absolute or hypothetical peak-case conditions as defined in § 63.1365(b)(11)(i) or (ii), whichever is longer.

(B) Establish the maximum time interval between replacement, and replace the existing carbon before this time interval elapses. The time interval shall be established based on the conditions anticipated under absolute or hypothetical peak-case, as defined in § 63.1365(b)(11)(i) or (ii).

(vi) *Flares.* For each flare, the presence of the pilot flame shall be monitored at least once every 15 minutes during the period in which the flare is controlling HAP from an emission stream subject to the standards in § 63.1362. The monitoring device shall be calibrated annually.

(vii) *Thermal incinerators.* For each thermal incinerator, the owner or operator shall monitor the temperature of the gases exiting the combustion chamber as the site-specific operating parameter which must be measured and recorded at least once every 15 minutes during the period in which the combustion device is controlling HAP from an emission stream subject to the standards in § 63.1362.

(A) The temperature monitoring device must be accurate to within ±0.75 percent of the temperature measured in degrees Celsius or ±2.5 °C, whichever is greater.

(B) The monitoring device must be calibrated annually.

(viii) *Catalytic incinerators.* For each catalytic incinerator, the parameter levels that the owner or operator shall establish are the minimum temperature of the gas stream immediately before the catalyst bed and the minimum temperature difference across the catalyst bed. The owner or operator shall monitor the temperature of the gas stream immediately before and after the catalyst bed, and calculate the temperature difference across the catalyst bed, at least once every 15 minutes during the period in which the catalytic incinerator is controlling HAP from an emission stream subject to the standards in § 63.1362.

(A) The temperature monitoring devices must be accurate to within ±0.75 percent of the temperature measured in degrees Celsius or ±2.5 °C, whichever is greater.

(B) The temperature monitoring devices must be calibrated annually.

(ix) *Process heaters and boilers.* (A) Except as specified in paragraph (b)(1)(ix)(B) of this section, for each boiler or process heater, the owner or operator shall monitor the temperature of the gases exiting the combustion chamber as the site-specific operating parameter which must be monitored and recorded at least every 15 minutes during the period in which the boiler or process heater is controlling HAP from an emission stream subject to the standards in § 63.1362.

(*1*) The temperature monitoring device must be accurate to within ±0.75 percent of the temperature measured in degrees Celsius or ±2.5 °C, whichever is greater.

(*2*) The temperature monitoring device must be calibrated annually.

(B) The owner or operator is exempt from the monitoring requirements specified in paragraph (b)(1)(ix)(A) of this section if either:

(*1*) All vent streams are introduced with primary fuel; or

(*2*) The design heat input capacity of the boiler or process heater is 44 megawatts or greater.

(x) *Continuous emission monitor*. As an alternative to the parameters specified in paragraphs (b)(1)(ii) through (ix) of this section, an owner or operator may monitor and record the outlet HAP concentration or both the outlet TOC concentration and outlet total HCl and chlorine concentration at least every 15 minutes during the period in which the control device is controlling HAP from an emission stream subject to the standards in § 63.1362. The owner or operator need not monitor the total HCl and chlorine concentration if the owner or operator determines that the emission stream does not contain HCl or chlorine. The owner or operator need not monitor the TOC concentration if the owner or operator determines the emission stream does not contain organic compounds. The HAP or TOC monitor must meet the requirements of Performance Specification 8 or 9 of appendix B of part 60 and must be installed, calibrated, and maintained, according to § 63.8 of subpart A of this part. As part of the QA/QC Plan, calibration of the device must include, at a minimum, quarterly cylinder gas audits. If supplemental gases are introduced before the control device, the monitored concentration shall be corrected as specified in § 63.1365(a)(7).

(xi) *Fabric filters*. For each fabric filter used to control particulate matter emissions from bag dumps and product dryers subject to § 63.1362(e), the owner or operator shall install, calibrate, maintain, and continuously operate a bag leak detection system that meets the requirements in paragraphs (b)(1)(xi)(A) through (G) of this section.

(A) The bag leak detection system sensor must provide output of relative particulate matter emissions.

(B) The bag leak detection system must be equipped with an alarm system that will sound when an increase in particulate matter emissions over a preset level is detected.

(C) For positive pressure fabric filters, a bag leak detector must be installed in each fabric filter compartment or cell. If a negative pressure or induced air filter is used, the bag leak detector must be installed downstream of the fabric filter. Where multiple bag leak detectors are required (for either type of fabric filter), the system instrumentation and alarm may be shared among detectors.

(D) The bag leak detection system shall be installed, operated, calibrated and maintained in a manner consistent with available guidance from the U.S. Environmental Protection Agency or, in the absence of such guidance, the manufacturer's written specifications and instructions.

(E) Calibration of the system shall, at a minimum, consist of establishing the relative baseline output level by adjusting the range and the averaging period of the device and establishing the alarm set points and the alarm delay time.

(F) Following initial adjustment, the owner or operator shall not adjust the sensitivity or range, averaging period, alarm set points, or alarm delay time, except as established in an operation and maintenance plan that is to be submitted with the Precompliance plan. In no event shall the sensitivity be increased more than 100 percent or decreased by more than 50 percent over a 365-day period unless such adjustment follows a complete baghouse inspection which demonstrates the baghouse is in good operating condition.

(G) If the alarm on a bag leak detection system is triggered, the owner or operator shall, within 1 hour of an alarm, initiate the procedures to identify the cause of the alarm and take corrective action as specified in the corrective action plan.

(xii) For each waste management unit, treatment process, or control device used to comply with § 63.1362(d), the owner or operator shall comply with the procedures specified in § 63.143 of subpart G of this part, except that when the procedures to request approval to monitor alternative parameters according to the procedures in § 63.151(f) are referred to in § 63.143(d)(3), the procedures in paragraph (b)(4) of this section shall apply for the purposes of this subpart.

(xiii) *Closed-vent system visual inspections*. The owner or operator shall perform monthly visual inspections of each closed vent system as specified in § 63.1362(j).

(2) *Averaging periods*. Averaging periods for parametric monitoring levels shall be established according to paragraphs (b)(2)(i) through (iii) of this section.

(i) Except as provided in paragraph (b)(2)(iii) of this section, a daily (24-hour) or block average shall be calculated as the average of all values for a monitored parameter level set according to the procedures in (b)(3)(iii) of this section recorded during the operating day or block.

(ii) The operating day or block shall be defined in the Notification of Compliance Status report. The operating day may be from midnight to midnight or another continuous 24-hour period. The operating block may be used as an averaging period only for vents from batch operations, and is limited to a period of time that is, at a maximum, equal to the time from the beginning to end of a series of consecutive batch operations.

(iii) Monitoring values taken during periods in which the control devices are not controlling HAP from an emission stream subject to the standards in §63.1362, as indicated by periods of no flow or periods when only streams that are not subject to the standards in §63.1362 are controlled, shall not be considered in the averages. Where flow to the device could be intermittent, the owner or operator shall install, calibrate and operate a flow indicator at the inlet or outlet of the control device to identify periods of no flow.

(3) *Procedures for setting parameter levels for control devices used to control emissions from process vents*. (i) *Small control devices*. Except as provided in paragraph (b)(1)(i) of this section, for devices controlling less than 10 tons/yr of HAP for which a performance test is not required, the parameteric levels shall be set based on the design evaluation required in §63.1365(c)(3)(i)(A). If a performance test is conducted, the monitoring parameter level shall be established according to the procedures in paragraph (b)(3)(ii) of this section.

(ii) *Large control devices*. For devices controlling greater than or equal to 10 tons/yr of HAP for which a performance test is required, the parameter level must be established as follows:

(A) If the operating parameter level to be established is a maximum or minimum, it must be based on the average of the average values from each of the three test runs.

(B) The owner or operator may establish the parametric monitoring level(s) based on the performance test supplemented by engineering assessments and/or manufacturer's recommendations. Performance testing is not required to be conducted over the entire range of expected parameter values. The rationale for the specific level for each parameter, including any data and calculations used to develop the level(s) and a description of why the level indicates proper operation of the control device shall be provided in the Precompliance plan. Determination of the parametric monitoring level using these procedures is subject to review and approval by the Administrator.

(iii) *Parameter levels for control devices controlling batch process vents*. For devices controlling batch process vents alone or in combination with other streams, the level(s) shall be established in accordance with paragraph (b)(3)(iii)(A) or (B) of this section.

(A) A single level for the batch process(es) shall be calculated from the initial compliance demonstration.

(B) The owner or operator may establish separate levels for each batch emission episode or combination of emission episodes selected to be controlled. If separate monitoring levels are established, the owner or operator must provide a record indicating at what point in the daily schedule or log of processes required to be recorded per the requirements of §63.1367(b)(7), the parameter being monitored changes levels and must record at least one reading of the new parameter level, even if the duration of monitoring for the new parameter level is less than 15 minutes.

(4) *Requesting approval to monitor alternative parameters*. The owner or operator may request approval to monitor parameters other than those required by paragraphs (b)(1)(ii) through (xiii) of this section. The request shall be submitted according to the procedures specified in §63.8(f) of subpart A of this part or in the Precompliance report (as specified in §63.1368(e)).

(5) *Monitoring for the alternative standards.* For control devices that are used to comply with the provisions of § 63.1362(b)(6) and (c)(4), the owner or operator shall monitor and record the outlet TOC concentration and the outlet total HCl and chlorine concentration at least once every 15 minutes during the period in which the device is controlling HAP from emission streams subject to the standards in § 63.1362. A TOC monitor meeting the requirements of Performance Specification 8 or 9 of appendix B of 40 CFR part 60 shall be installed, calibrated, and maintained, according to § 63.8 of subpart A of this part. The owner or operator need not monitor the total HCl and chlorine concentration if the owner or operator determines that the emission stream does not contain HCl or chlorine. The owner or operator need not monitor for TOC concentration if the owner or operator determines that the emission stream does not contain organic compounds. If supplemental gases are introduced before the control device, the monitored concentration shall be corrected as specified in § 63.1365(a)(7).

(6) *Exceedances of operating parameters.* An exceedance of an operating parameter is defined as one of the following:

(i) If the parameter level, averaged over the operating day or block, is below a minimum value established during the initial compliance demonstration.

(ii) If the parameter level, averaged over the operating day or block, is above the maximum value established during the initial compliance demonstration.

(iii) A loss of all pilot flames for a flare during an operating day or block. Multiple losses of all pilot flames during an operating day constitutes one exceedance.

(iv) Each operating day or block for which the time interval between replacement of a nonregenerative carbon adsorber exceeds the interval established in paragraph (b)(1)(v) of this section.

(v) Each instance in which procedures to initiate the response to a bag leak detector alarm within 1 hour of the alarm as specified in the corrective action plan.

(7) *Excursions.* Excursions are defined by either of the two cases listed in paragraph (b)(7)(i) or (ii) of this section. An excursion also occurs if the periodic verification for a small control device is not conducted as specified in paragraph (b)(1)(i) of this section.

(i) When the period of control device operation is 4 hours or greater in an operating day or block and monitoring data are insufficient to constitute a valid hour of data, as defined in paragraph (b)(7)(iii) of this section, for at least 75 percent of the operating hours.

(ii) When the period of control device operation is less than 4 hours in an operating day or block and more than 1 of the hours during the period of operation does not constitute a valid hour of data due to insufficient monitoring data.

(iii) Monitoring data are insufficient to constitute a valid hour of data, as used in paragraphs (b)(7)(i) and (ii) of this section, if measured values are unavailable for any of the required 15-minute periods within the hour.

(8) *Violations.* Exceedances of parameters monitored according to the provisions of paragraphs (b)(1)(ii) and (b)(1)(iv) through (ix) of this section or excursions as defined by paragraphs (b)(7)(i) and (ii) of this section constitute violations of the operating limit according to paragraphs (b)(8) (i), (ii), and (iv) of this section. Exceedances of the temperature limit monitored according to the provisions of paragraph (b)(1)(iii) of this section or exceedances of the outlet concentrations monitored according to the provisions of paragraph (b)(1)(x) of this section constitute violations of the emission limit according to paragraphs (b)(8) (i), (ii), and (iv) of this section. Exceedances of the outlet concentrations monitored according to the provisions of paragraph (b)(5) of this section constitute violations of the emission limit according to the provisions of paragraphs (b)(8) (iii) and (iv) of this section.

(i) Except as provided in paragraph (b)(8)(iv) of this section, for episodes occurring more than once per day, exceedances of established parameter limits or excursions will result in no

more than one violation per operating day for each monitored item of equipment utilized in the process.

(ii) Except as provided in paragraph (b)(8)(iv) of this section, for control devices used for more than one process in the course of an operating day, exceedances or excursions will result in no more than one violation per operating day, per control device, for each process for which the control device is in service.

(iii) Except as provided in paragraph (b)(8)(iv) of this section, exceedances of the 20 ppmv TOC outlet emission limit, averaged over the operating day, will result in no more than one violation per day per control device. Except as provided in paragraph (b)(8)(iv) of this section, exceedances of the 20 ppmv HCl and chlorine outlet emission limit, averaged over the operating day, will result in no more than one violation per day per control device.

(iv) Periods of time when monitoring measurements exceed the parameter values as well as periods of inadequate monitoring data do not constitute a violation if they occur during a startup, shutdown, or malfunction, and the facility follows its startup, shutdown, and malfunction plan.

(c) *Monitoring for uncontrolled emission rates.* The owner or operator shall demonstrate continuous compliance with the emission limit in §63.1362 (b)(2)(i) or (b)(4)(i) by calculating daily a 365-day rolling summation of uncontrolled emissions based on the uncontrolled emissions per emission episode, as calculated using the procedures in §63.1365(c)(2), and records of the number of batches produced. Each day that the summation for a process exceeds 0.15 Mg/yr is considered a violation of the emission limit.

(d) *Monitoring for equipment leaks.* The standard for equipment leaks is based on monitoring. All monitoring requirements for equipment leaks are specified in §63.1363.

(e) *Monitoring for heat exchanger systems.* The standard for heat exchanger systems is based on monitoring. All monitoring requirements for heat exchanger systems are specified in §63.1362(f).

(f) *Monitoring for the pollution prevention alternative standard.* The owner or operator of an affected source that chooses to comply with the requirements of §63.1362(g) (2) or (3) shall calculate annual rolling average values of the HAP and VOC factors in accordance with the procedures specified in paragraph (f)(1) of this section. If complying with §63.1362(g)(3), the owner or operator shall also comply with the monitoring requirements specified in paragraph (b) of this section for the applicable add-on air pollution control device.

(1) *Annual factors.* The annual HAP and VOC factors shall be calculated in accordance with the procedures specified in paragraphs (f)(1) (i) through (iii) of this section.

(i) The consumption of both total HAP and total VOC shall be divided by the production rate, per process, for 12-month periods at the frequency specified in either paragraph (f)(1) (ii) or (iii) of this section, as applicable.

(ii) For continuous processes, the annual factors shall be calculated every 30 days for the 12-month period preceding the 30th day (annual rolling average calculated every 30 days). A process with both batch and continuous operations is considered a continuous process for the purposes of this section.

(iii) For batch processes, the annual factors shall be calculated every 10 batches for the 12-month period preceding the 10th batch (annual rolling average calculated every 10 batches). Additional annual factors shall be calculated every 12 months during the period before the 10th batch if more than 12 months elapse before the 10th batch is produced.

(2) *Violations.* Each rolling average that exceeds the target value established in §63.1365(g)(3) is considered a violation of the emission limit.

(g) *Monitoring for emissions averaging.* The owner or operator of an affected source that chooses to comply with the requirements of §63.1362(h) shall meet all monitoring requirements specified in paragraph (b) of this section, as applicable, for all processes, storage tanks, and waste management units included in the emissions average.

§ 63.1367 Recordkeeping requirements.

(a) *Requirements of subpart A of this part.* The owner or operator of an affected source shall comply with the recordkeeping requirements in subpart A of this part as specified in Table 1 of this subpart and in paragraphs (a)(1) through (5) of this section.

(1) *Data retention.* Each owner or operator of an affected source shall keep copies of all records and reports required by this subpart for at least 5 years, as specified in § 63.10(b)(1) of subpart A of this part.

(2) *Records of applicability determinations.* The owner or operator of a stationary source that is not subject to this subpart shall keep a record of the applicability determination, as specified in § 63.10(b)(3) of subpart A of this part.

(3) *Startup, shutdown, and malfunction plan.* The owner or operator of an affected source shall develop and implement a written startup, shutdown, and malfunction plan as specified in § 63.6(e)(3) of subpart A of this part. This plan shall describe, in detail, procedures for operating and maintaining the affected source during periods of startup, shutdown, and malfunction and a program for corrective action for a malfunctioning process, air pollution control, and monitoring equipment used to comply with this subpart. The owner or operator of an affected source shall keep the current and superseded versions of this plan onsite, as specified in § 63.6(e)(3)(v) of subpart A of this part. The owner or operator shall keep the startup, shutdown, and malfunction records specified in paragraphs (b)(3)(i) through (iii) of this section. Reports related to the plan shall be submitted as specified in § 63.1368(i).

(i) The owner or operator shall record the occurrence and duration of each malfunction of air pollution control equipment used to comply with this subpart, as specified in § 63.6(e)(3)(iii) of subpart A of this part.

(ii) The owner or operator shall record the occurrence and duration of each malfunction of continuous monitoring systems used to comply with this subpart.

(iii) For each startup, shutdown, or malfunction, the owner or operator shall record all information necessary to demonstrate that the procedures specified in the affected source's startup, shutdown, and malfunction plan were followed, as specified in § 63.6(e)(3)(iii) of subpart A of this part; alternatively, the owner or operator shall record any actions taken that are not consistent with the plan, as specified in § 63.6(e)(3)(iv) of subpart A of this part.

(4) *Recordkeeping requirements for sources with continuous monitoring systems.* The owner or operator of an affected source who installs a continuous monitoring system to comply with the alternative standards in § 63.1362(b)(6) or (c)(4) shall maintain records specified in § 63.10(c)(1) through (14) of subpart A of this part.

(5) *Application for approval of construction or reconstruction.* For new affected sources, each owner or operator shall comply with the provisions regarding construction and reconstruction in § 63.5 of subpart A of this part.

(b) *Records of equipment operation.* The owner or operator must keep the following records up-to-date and readily accessible:

(1) Each measurement of a control device operating parameter monitored in accordance with § 63.1366 and each measurement of a treatment process parameter monitored in accordance with the provisions of § 63.1362(d).

(2) For processes subject to § 63.1362(g), records of consumption, production, and the rolling average values of the HAP and VOC factors.

(3) For each continuous monitoring system used to comply with the alternative standards in § 63.1362(b)(6) and (c)(4), records documenting the completion of calibration checks and maintenance of the continuous monitoring systems.

(4) For processes in compliance with the 0.15 Mg/yr emission limit of § 63.1362(b)(2)(i) or (b)(4)(i), records of the rolling annual calculations of uncontrolled emissions.

(5) For each bag leak detector used to monitor particulate HAP emissions from a fabric filter, the owner or operator shall maintain records of any bag leak detection alarm, including the date and time, with a brief explanation of the cause of the alarm and the corrective action taken.

(6) The owner or operator of an affected source that complies with the standards for process vents, storage tanks, and wastewater systems shall maintain up-to-date, readily accessible records of the information specified in paragraphs (b)(6)(i) through (vii) of this section to document that HAP emissions or HAP loadings (for wastewater) are below the limits specified in §63.1362:

(i) The initial calculations of uncontrolled and controlled emissions of gaseous organic HAP and HCl per batch for each process.

(ii) The wastewater concentrations and flow rates per POD and process.

(iii) The number of batches per year for each batch process.

(iv) The operating hours per year for continuous processes.

(v) The number of batches and the number of operating hours for processes that contain both batch and continuous operations.

(vi) The number of tank turnovers per year, if used in an emissions average or for determining applicability of a new PAI process unit.

(vii) A description of absolute or hypothetical peak-case operating conditions as determined using the procedures in §63.1365(b)(11).

(viii) Periods of planned routine maintenance as described in §63.1362(c)(5).

(7) Daily schedule or log of each operating scenario prior to its operation.

(c) *Records of equipment leak detection and repair*. The owner or operator of an affected source subject to the equipment leak standards in §63.1363 shall implement the recordkeeping requirements specified in §63.1363(g). All records shall be retained for a period of 5 years, in accordance with the requirements of §63.10(b)(1) of subpart A of this part.

(d) *Records of emissions averaging*. The owner or operator of an affected source that chooses to comply with the requirements of §63.1362(h) shall maintain up-to-date records of the following information:

(1) An Emissions Averaging Plan which shall include in the plan, for all emission points included in each of the emissions averages, the information listed in paragraphs (d)(1)(i) through (v) of this section.

(i) The identification of all emission points in each emissions average.

(ii) The values of all parameters needed for input to the emission debits and credits equations in §63.1365(h).

(iii) The calculations used to obtain the debits and credits.

(iv) The estimated values for all parameters required to be monitored under §63.1366(g) for each emission point included in an average. These parameter values, or as appropriate, limited ranges for parameter values, shall be specified as enforceable operating conditions for the operation of the process, storage vessel, or waste management unit, as appropriate. Changes to the parameters must be reported as required by §63.1368(k).

(v) A statement that the compliance demonstration, monitoring, inspection, recordkeeping and reporting provisions in §63.1365(h), §63.1366(g), and §63.1368(k) that are applicable to each emission point in the emissions average will be implemented beginning on the date of compliance.

(2) The Emissions Averaging Plan shall demonstrate that the emissions from the emission points proposed to be included in the average will not result in greater hazard or, at the option of the operating permit authority, greater risk to human health or the environment than if the emission points were controlled according to the provisions in §63.1362(b) through (d).

(i) This demonstration of hazard or risk equivalency shall be made to the satisfaction of the operating permit authority.

(A) The Administrator may require an owner or operator to use specific methodologies and procedures for making a hazard or risk determination.

(B) The demonstration and approval of hazard or risk equivalency shall be made according to any guidance that the Administrator makes available for use or any other technically sound information or methods.

(ii) An Emissions Averaging Plan that does not demonstrate hazard or risk equivalency to the satisfaction of the Administrator shall not be approved. The Administrator may require such adjustments to the Emissions

Averaging Plan as are necessary in order to ensure that the average will not result in greater hazard or risk to human health or the environment than would result if the emission points were controlled according to § 63.1362(b) through (d).

(iii) A hazard or risk equivalency demonstration must satisfy the requirements specified in paragraphs (d)(2)(iii) (A) through (C) of this section.

(A) Be a quantitative, comparative chemical hazard or risk assessment;

(B) Account for differences between averaging and nonaveraging options in chemical hazard or risk to human health or the environment; and

(C) Meet any requirements set by the Administrator for such demonstrations.

(3) Records as specified in paragraphs (a) and (b) of this section.

(4) A calculation of the debits and credits as specified in § 63.1365(h) for the last quarter and the prior four quarters.

(e) The owner or operator of an affected source subject to the requirements for heat exchanger systems in § 63.1362(g) shall retain the records as specified in § 63.104(f)(1)(i) through (iv) of subpart G of this part.

(f) For each vapor collection system or closed-vent system that contains bypass lines that could divert a vent stream away from the control device and to the atmosphere, the owner or operator shall keep a record of the information specified in either paragraph (f) (1) or (2) of this section.

(1) Hourly records of whether the flow indicator specified under § 63.1362(j)(1) was operating and whether a diversion was detected at any time during the hour, as well as records of the times and durations of all periods when the vent stream is diverted from the control device or the flow indicator is not operating.

(2) Where a seal mechanism is used to comply with § 63.1362(j)(2), hourly records of flow are not required. In such cases, the owner or operator shall record that the monthly visual inspection of the seals or closure mechanism has been done, and shall record the occurrence of all periods when the seal mechanism is broken, the bypass line valve position has changed, or the key for a lock-and-key type lock has been checked out, and records of any car-seal that has broken.

(g) *Records of primary use.* For a PAI process unit that is used to produce a given material for use as a PAI as well as for other purposes, the owner or operator shall keep records of the total production and the production for use as a PAI on a semiannual or more frequent basis if the use as a PAI is not the primary use.

§ 63.1368 Reporting requirements.

(a) The owner or operator of an affected source shall comply with the reporting requirements of paragraphs (b) through (l) of this section. The owner or operator shall also comply with applicable paragraphs of §§ 63.9 and 63.10 of subpart A of this part, as specified in Table 1 of this subpart.

(b) *Initial notification.* The owner or operator shall submit the applicable initial notification in accordance with § 63.9(b) or (d) of subpart A of this part.

(c) *Application for approval of construction or reconstruction.* The owner or operator who is subject to § 63.5(b)(3) of subpart A of this part shall submit to the Administrator an application for approval of the construc-tion of a new major source, the reconstruction of a major affected source, or the reconstruction of a major affected source subject to the standards. The application shall be prepared in accordance with § 63.5(d) of subpart A of this part.

(d) *Notification of continuous monitoring system performance evaluation.* An owner or operator who is required by the Administrator to conduct a performance evaluation for a continuous monitoring system that is used to comply with the alternative standard in § 63.1362(b)(6) or (c)(4) shall notify the Administrator of the date of the performance evaluation as specified in § 63.8(e)(2) of subpart A of this part.

(e) *Precompliance plan.* The Precompliance plan shall be submitted at least 3 months prior to the compliance date of the standard. For new sources, the Precompliance plan shall be submitted to the Administrator with the application for approval of construction or reconstruction. The

Administrator shall have 90 days to approve or disapprove the Precompliance plan. The Precompliance plan shall be considered approved if the Administrator either approves it in writing, or fails to disapprove it in writing within the 90-day time period. The 90-day period shall begin when the Administrator receives the Precompliance plan. If the Precompliance plan is disapproved, the owner or operator must still be in compliance with the standard by the compliance date. To change any of the information submitted in the Precompliance plan, the owner or operator shall notify the Administrator at least 90 days before the planned change is to be implemented; the change shall be considered approved if the Administrator either approves the change in writing, or fails to disapprove the change in writing within 90 days of receipt of the change. The Precompliance plan shall include the information specified in paragraphs (e)(1) through (5) of this section.

(1) Requests for approval to use alternative monitoring parameters or requests to set monitoring parameters according to §63.1366(b)(4).

(2) Descriptions of the daily or per batch demonstrations to verify that control devices subject to §63.1366(b)(1)(i) are operating as designed.

(3) Data and rationale used to support the parametric monitoring level(s) that are set according to §63.1366(b)(3)(ii)(B).

(4) For owners and operators complying with the requirements of §63.1362(i), the pollution prevention demonstration summary required in §63.1365(g)(3).

(5) Data and rationale used to support an engineering assessment to calculate uncontrolled emissions from process vents as required in §63.1365(c)(2)(ii).

(6) For fabric filters that are monitored with bag leak detectors, an operation and maintenance plan that describes proper operation and maintenance procedures, and a corrective action plan that describes corrective actions to be taken, and the timing of those actions, when the particulate matter concentration exceeds the setpoint and activates the alarm.

(f) *Notification of compliance status report.* The Notification of Compliance Status report required under §63.9(h) shall be submitted no later than 150 calendar days after the compliance date and shall include the information specified in paragraphs (f)(1) through (7) of this section.

(1) The results of any applicability determinations, emission calculations, or analyses used to identify and quantify HAP emissions from the affected source.

(2) The results of emissions profiles, performance tests, engineering analyses, design evaluations, or calculations used to demonstrate compliance. For performance tests, results should include descriptions of sampling and analysis procedures and quality assurance procedures.

(3) Descriptions of monitoring devices, monitoring frequencies, and the values of monitored parameters established during the initial compliance determinations, including data and calculations to support the levels established.

(4) Operating scenarios.

(5) Descriptions of absolute or hypothetical peak-case operating and/or testing conditions for control devices.

(6) Identification of emission points subject to overlapping requirements described in §63.1360(h) and the authority under which the owner or operator will comply, and identification of emission sources discharging to devices described by §63.1362(l).

(7) Anticipated periods of planned routine maintenance during which the owner or operator would not be in compliance with the provisions in §63.1362(c)(1) through (4).

(8) Percentage of total production from a PAI process unit that is anticipated to be produced for use as a PAI in the 3 years after either June 23, 1999 or startup, whichever is later.

(g) *Periodic reports.* The owner or operator shall prepare Periodic reports in accordance with paragraphs (g)(1) and (2) of this section and submit them to the Administrator.

(1) *Submittal schedule.* Except as provided in paragraphs (g)(1)(i) and (ii) of this section, the owner or operator shall submit Periodic reports semiannually, beginning 60 operating days

after the end of the applicable reporting period. The first report shall be submitted no later than 240 days after the date the Notification of Compliance Status report is due and shall cover the 6-month period beginning on the date the Notification of Compliance Status report is due.

(i) The Administrator may determine on a case-by-case basis that more frequent reporting is necessary to accurately assess the compliance status of the affected source.

(ii) Quarterly reports shall be submitted when the monitoring data are used to comply with the alternative standards in § 63.1362(b)(6) or (c)(4) and the source experiences excess emissions. Once an affected source reports excess emissions, the affected source shall follow a quarterly reporting format until a request to reduce reporting frequency is approved. If an owner or operator submits a request to reduce the frequency of reporting, the provisions in § 63.10(e)(3) (ii) and (iii) of subpart A of this part shall apply, except that the term ''excess emissions and continuous monitoring system performance report and/or summary report'' shall mean ''Periodic report'' for the purposes of this section.

(2) *Content of periodic report.* The owner or operator shall include the information in paragraphs (g)(2)(i) through (vi) of this section, as applicable.

(i) Each Periodic report must include the information in § 63.10(e)(3)(vi)(A) through (M) of subpart A of this part, as applicable.

(ii) If the total duration of excess emissions, parameter exceedances, or excursions for the reporting period is 1 percent or greater of the total operating time for the reporting period, or the total continuous monitoring system downtime for the reporting period is 5 percent or greater of the total operating time for the reporting period, the Periodic report must include the information in paragraphs (g)(2)(ii)(A) through (D) of this section.

(A) Monitoring data, including 15-minute monitoring values as well as daily average values of monitored parameters, for all operating days when the average values were outside the ranges established in the Notification of Compliance Status report or operating permit.

(B) Duration of excursions, as defined in § 63.1366(b)(7).

(C) Operating logs and operating scenarios for all operating days when the values are outside the levels established in the Notification of Compliance Status report or operating permit.

(D) When a continuous monitoring system is used, the information required in § 63.10(c)(5) through (13) of subpart A of this part.

(iii) For each vapor collection system or closed vent system with a bypass line subject to § 63.1362(j)(1), records required under § 63.1366(f) of all periods when the vent stream is diverted from the control device through a bypass line. For each vapor collection system or closed vent system with a bypass line subject to § 63.1362(j)(2), records required under § 63.1366(f) of all periods in which the seal mechanism is broken, the bypass valve position has changed, or the key to unlock the bypass line valve was checked out.

(iv) The information in paragraphs (g)(2)(iv)(A) through (D) of this section shall be stated in the Periodic report, when applicable.

(A) No excess emissions.

(B) No exceedances of a parameter.

(C) No excursions.

(D) No continuous monitoring system has been inoperative, out of control, repaired, or adjusted.

(v) For each storage vessel subject to control requirements:

(A) Actual periods of planned routine maintenance during the reporting period in which the control device does not meet the specifications of § 63.1362(c)(5); and

(B) Anticipated periods of planned routine maintenance for the next reporting period.

(vi) For each PAI process unit that does not meet the definition of primary use, the percentage of the production in the reporting period produced for use as a PAI.

(viii) Updates to the corrective action plan.

(h) *Notification of process change.* (1) Except as specified in paragraph (h)(2) of this section, whenever a process change is made, or any of the information submitted in the Notification of

Compliance Status report changes, the owner or operator shall submit a report quarterly. The report may be submitted as part of the next Periodic report required under paragraph (g) of this section. The report shall include:

(i) A brief description of the process change;

(ii) A description of any modifications to standard procedures or quality assurance procedures;

(iii) Revisions to any of the information reported in the original Notification of Compliance Status report under paragraph (f) of this section; and

(iv) Information required by the Notification of Compliance Status report under paragraph (f) of this section for changes involving the addition of processes or equipment.

(2) The owner or operator must submit a report 60 days before the scheduled implementation date of either of the following:

(i) Any change in the activity covered by the Precompliance report.

(ii) A change in the status of a control device from small to large.

(i) *Reports of startup, shutdown, and malfunction.* For the purposes of this subpart, the startup, shutdown, and malfunction reports shall be submitted on the same schedule as the Periodic reports required under paragraph (g) of this section instead of the schedule specified in §63.10(d)(5)(i) of subpart A of this part. These reports shall include the information specified in §63.1367(a)(3)(i) through (iii) and shall contain the name, title, and signature of the owner or operator or other responsible official who is certifying its accuracy. Reports are only required if a startup, shutdown, or malfunction occurred during the reporting period. Any time an owner or operator takes an action that is not consistent with the procedures specified in the affected source's startup, shutdown, and malfunction plan, the owner or operator shall submit an immediate startup, shutdown, and malfunction report as specified in §63.10(d)(5)(ii) of subpart A of this part.

(j) *Reports of equipment leaks.* The owner or operator of an affected source subject to the standards in §63.1363, shall implement the reporting requirements specified in §63.1363(h). Copies of all reports shall be retained as records for a period of 5 years, in accordance with the requirements of §63.10(b)(1) of subpart A of this part.

(k) *Reports of emissions averaging.* The owner or operator of an affected source that chooses to comply with the requirements of §63.1362(h) shall submit all information as specified in §63.1367(d) for all emission points included in the emissions average. The owner or operator shall also submit to the Administrator all information specified in paragraph (g) of this section for each emission point included in the emissions average.

(1) The reports shall also include the information listed in paragraphs (k)(1)(i) through (iv) of this section:

(i) Any changes to the processes, storage tanks, or waste management unit included in the average.

(ii) The calculation of the debits and credits for the reporting period.

(iii) Changes to the Emissions Averaging Plan which affect the calculation methodology of uncontrolled or controlled emissions or the hazard or risk equivalency determination.

(iv) Any changes to the parameters monitored according to §63.1366(g).

(2) Every second semiannual or fourth quarterly report, as appropriate, shall include the results according to §63.1367(d)(4) to demonstrate the emissions averaging provisions of §63.1362(h), §63.1365(h), §63.1366(g), and §63.1367(d) are satisfied.

(l) *Reports of heat exchange systems.* The owner or operator of an affected source subject to the requirements for heat exchange systems in §63.1362(f) shall submit information about any delay of repairs as specified in §63.104(f)(2) of subpart F of this part, except that when the phrase ''periodic reports required by §63.152(c) of subpart G of this part'' is referred to in §63.104(f)(2) of subpart F of this part, the periodic reports required in paragraph (g) of this section shall apply for the purposes of this subpart.

(m) *Notification of performance test and test Plan.* The owner or operator of an affected source shall notify the Administrator of the planned date of a performance test at least 60 days before the test in accordance with §63.7(b) of subpart A of this part. The owner or

operator also must submit the test Plan required by § 63.7(c) of subpart A of this part and the emission profile required by § 63.1365(b)(10)(ii) with the notification of the performance test.

(n) *Request for extension of compliance.* The owner or operator may submit to the Administrator a request for an extension of compliance in accordance with § 63.1364(a)(2).

(o) The owner or operator who submits an operating permit application before the date the Emissions Averaging Plan is due shall submit the information specified in paragraphs (o)(1) through (3) of this section with the operating permit application instead of the Emissions Averaging Plan.

(1) The information specified in § 63.1367(d) for emission points included in the emissions average;

(2) The information specified in § 63.9(h) of subpart A of this part, as applicable; and

(3) The information specified in paragraph (e) of this section, as applicable.

[64 33589, June 23, 1999, as amended at 66 FR 58396, Nov. 21, 2001]

§ 63.1369 Delegation of authority.

(a) In delegating implementation and enforcement authority to a State under section 112(d) of the CAA, the authorities contained in paragraph (b) of this section shall be retained by the Administrator and not transferred to a State.

(b) The authority conferred in § 63.177 of subpart H of this part, the authority to approve applications for determination of equivalent means of emission limitation, and the authority to approve alternative test methods shall not be delegated to any State.

TABLE 1 TO SUBPART MMM OF PART 63—GENERAL PROVISIONS APPLICABILITY TO SUBPART MMM

Reference to subpart A	Applies to subpart MMM	Explanation
§ 63.1(a)(1)	Yes	Additional terms are defined in § 63.1361.
§ 63.1(a)(2)–(3)	Yes	
§ 63.1(a)(4)	Yes	Subpart MMM (this table) specifies applicability of each paragraph in subpart A to subpart MMM.
§ 63.1(a)(5)	N/A	Reserved.
§ 63.1(a)(6)–(7)	Yes	
§ 63.1(a)(8)	No	Discusses State programs.
§ 63.1(a)(9)	N/A	Reserved.
§ 63.1(a)(10)–(14)	Yes	
§ 63.1(b)(1)	No	§ 63.1360 specifies applicability.
§ 63.1(b)(2)–(3)	Yes	
§ 63.1(c)(1)	Yes	Subpart MMM (this table) specifies the applicability of each paragraph in subpart A to sources subject to subpart MMM.
§ 63.1(c)(2)	No	Area sources are not subject to subpart MMM.
§ 63.1(c)(3)	N/A	Reserved.
§ 63.1(c)(4)–(5)	Yes	
§ 63.1(d)	N/A	Reserved.
§ 63.1(e)	Yes	
§ 63.2	Yes	Additional terms are defined in § 63.1361; when overlap between subparts A and MMM occurs, subpart MMM takes precedence.
§ 63.3	Yes	Other units used in subpart MMM are defined in that subpart.
§ 63.4(a)(1)–(3)	Yes	
§ 63.4(a)(4)	N/A	Reserved.
§ 63.4(a)(5)–(c)	Yes	
§ 63.5(a)	Yes	Except the term ''affected source'' shall apply instead of the terms ''source'' and ''stationary source'' in § 63.5(a)(1) of subpart A.
§ 63.5(b)(1)	Yes	
§ 63.5(b)(2)	N/A	Reserved.
§ 63.5(b)(3)–(5)	Yes	
§ 63.5(b)(6)	No	§ 63.1360(g) specifies requirements for determining applicability of added PAI equipment.
§ 63.5(c)	N/A	Reserved.
§ 63.5(d)–(e)	Yes	
§ 63.5(f)(1)	Yes	Except ''affected source'' shall apply instead of ''source'' in § 63.5(f)(1) of subpart A.
§ 63.5(f)(2)	Yes	
§ 63.6(a)	Yes	
§ 63.6(b)(1)–(2)	No	§ 63.1364 specifies compliance dates.
§ 63.6(b)(3)–(4)	Yes	

Reference to subpart A	Applies to subpart MMM	Explanation
§ 63.6(b)(5)	Yes.	
§ 63.6(b)(6)	N/A	Reserved.
§ 63.6(b)(7)	Yes	
§ 63.6(c)(1)–(2)	Yes	Except ''affected source'' shall apply instead of ''source'' in § 63.6(c)(1)–(2) of subpart A.
§ 63.6(c)(3)–(4)	N/A	Reserved.
§ 63.6(c)(5)	Yes	
§ 63.6(d)	N/A	Reserved.
§ 63.6(e)	Yes	Except § 63.1360 specifies that the standards in subpart MMM apply during startup and shutdown for batch processes; therefore, these activities would not be covered in the startup, shutdown, and malfunction Plan.
§ 63.6(f)	Yes	Except § 63.1360 specifies that the standards in subpart MMM also apply during startup and shutdown for batch processes.
§ 63.6(g)	Yes	An alternative standard has been proposed; however, affected sources will have the opportunity to demonstrate other alternatives to the Administrator.
§ 63.6(h)	No	Subpart MMM does not contain any opacity or visible emissions standards.
§ 63.6(i)(1)	Yes	
§ 63.6(i)(2)	Yes	Except ''affected source'' shall apply instead of ''source'' in § 63.6(i)(2)(i) and (ii) of subpart A.
§ 63.6(i)(3)–(14)	Yes	
§ 63.6(i)(15)	N/A	Reserved.
§ 63.6(i)(16)	Yes	
§ 63.6(j)	Yes	
§ 63.7(a)(1)	Yes	
§ 63.7(a)(2)(i)–(vi)	Yes	§ 63.1368 specifies that test results must be submitted in the Notification of Compliance Status due 150 days after the compliance date.
§ 63.7(a)(2)(vii)–(viii)	N/A	Reserved.
§ 63.7(a)(2)(ix)–(c)	Yes	
§ 63.7(d)	Yes	Except ''affected source'' shall apply instead of ''source'' in § 63.7(d) of subpart A.
§ 63.7(e)(1)	Yes	§ 63.1365 contains test methods specific to PAI sources.
§ 63.7(e)(2)	Yes	
§ 63.7(e)(3)	Yes	Except § 63.1365 specifies less than 3 runs for certain tests.
§ 63.7(e)(4)	Yes.	
§ 63.7(f)	Yes	
§ 63.7(g)(1)	Yes	Except § 63.1368(a) specifies that the results of the performance test be submitted with the Notification of Compliance Status report
§ 63.7(g)(2)	N/A	Reserved.
§ 63.7(g)(3)	Yes	
§ 63.7(h)	Yes	
§ 63.8(a)(1)–(2)	Yes	
§ 63.8(a)(3)	N/A	Reserved.
§ 63.8(a)(4)	Yes	
§ 63.8(b)(1)	Yes	
§ 63.8(b)(2)	No	§ 63.1366 specifies CMS requirements.
§ 63.8(b)(3)–(c)(3)	Yes	Except the submittal date of the immediate startup, shutdown, and malfunction reports for CMS events shall be 2 days as in § 63.6(e)(3)(iv).
§ 63.8(c)(4)	No	§ 63.1366 specifies monitoring frequencies.
§ 63.8(c)(5)–(8)	No	
§ 63.8(d)–(f)(3)	Yes	
§ 63.8(f)(4)	Yes	Except § 63.1368(b) specifies that requests may also be included in the Precompliance report.
§ 63.8(f)(5)	Yes	
§ 63.8(f)(6)	No	Subpart MMM does not require CEM's.
§ 63.8(g)	No	§ 63.1366 specifies data reduction procedures.
§ 63.9(a)–(d)	Yes	
§ 63.9(e)	No	
§ 63.9(f)	No	Subpart MMM does not contain opacity and visible emission standards.
§ 63.9(g)	No	
§ 63.9(h)(1)	Yes	
§ 63.9(h)(2)(i)	Yes	Except § 63.1368(a)(1) specifies additional information to include in the Notification of Compliance Status report.
§ 63.9(h)(2)(ii)	No	§ 63.1368 specifies the Notification of Compliance Status report is to be submitted within 150 days after the compliance date.
§ 63.9(h)(3)	Yes	
§ 63.9(h)(4)	N/A	Reserved.
§ 63.9(h)(5)–(6)	Yes	
§ 63.9(i)–(j)	Yes	Except § 63.9(j) does not apply for changes in information in the notification of compliance status report on equipment leaks as specified in § 63.1363(h)(2).
§ 63.10(a)–(b)(1)	Yes	
§ 63.10(b)(2)	No	§ 63.1367 specifies recordkeeping requirements.
§ 63.10(b)(3)	Yes	
§ 63.10(c)	Yes	

Reference to subpart A	Applies to subpart MMM	Explanation
§ 63.10(d)(1)	Yes	
§ 63.10(d)(2)	Yes	
§ 63.10(d)(3)	No	Subpart MMM does not include opacity and visible emission standards.
§ 63.10(d)(4)	Yes	
§ 63.10(d)(5)	Yes	Except that actions and reporting for batch processes do not apply during start-up and shutdown.
§ 63.10(e)(1)–(2)(i)	Yes	
§ 63.10(e)(2)(ii)	No	Subpart MMM does not include opacity monitoring requirements.
§ 63.10(e)(3)	Yes	
§ 63.10(e)(4)	No	Subpart MMM does not include opacity monitoring requirements.
§ 63.10(f)	Yes	
§ 63.11–§ 63.15	Yes.	

TABLE 2 TO SUBPART MMM OF PART 63—STANDARDS FOR NEW AND EXISTING PAI SOURCES

Emission source	Applicability	Requirement
Process vents	Existing:	
	Processes having uncontrolled organic HAP emissions ≥0.15 Mg/yr.	90% for organic HAP per process or to outlet concentration of ≤20 ppmv TOC.
	Processes having uncontrolled HCl and chlorine emissions ≥6.8 Mg/yr.	94% for HCl and chlorine per process or to outlet HCl and chlorine concentration of ≤20 ppmv.
	Individual process vents meeting flow and mass emissions criteria that have gaseous organic HAP emissions controlled to less than 90% on or after November 10, 1997.	98% gaseous organic HAP control per vent or ≤20 ppmv TOC outlet limit.
	New:	
	Processes having uncontrolled organic HAP emissions ≥0.15 Mg/yr.	98% for organic HAP per process or ≤20 ppmv TOC.
	Processes having uncontrolled HCl and chlorine emissions ≥6.8 Mg/yr and <191 Mg/yr.	94% for HCl and chlorine per process or to outlet concentration of ≤20 ppmv HCl and chlorine.
	Processes having uncontrolled HCl and chlorine emissions ≥191 Mg/yr.	99% for HCl and chlorine per process or to outlet concentration of ≤20 ppmv HCl and chlorine.
Storage vessels	Existing: ≥75 m^3 capacity and vapor pressure ≥3.45 kPa.	Install a floating roof, reduce HAP by 95% per vessel, or to outlet concentration of ≤20 ppmv TOC.
	New: ≥38 m^3 capacity and vapor pressure ≥16.5 kPa.	Same as for existing sources.
	≥75 m^3 capacity and vapor pressure ≥3.45 kPa	Same as for existing sources.
Wastewater[a]	Existing: Process wastewater with ≥10,000 ppmw Table 9 compounds at any flowrate or ≥1,000 ppmw Table 9 compounds at ≥10 L/min, and maintenance wastewater with HAP load ≥5.3 Mg per discharge event.	Reduce concentration of total Table 9 compounds to <50 ppmw (or other options).
	New:	
	Same criteria as for existing sources	Reduce concentration of total Table 9 compounds to <50 ppmw (or other options).
	Total HAP load in wastewater POD streams ≥2,100 Mg/yr..	99% reduction of Table 9 compounds from all streams.
Equipment leaks	Subpart H	Subpart H with minor changes, including monitoring frequencies consistent with the proposed CAR.
Product dryers and bag dumps.	Dryers used to dry PAI that is also a HAP, and bag dumps used to introduce feedstock that is a solid and a HAP.	Particulate matter concentration not to exceed 0.01 gr/dscf.
Heat exchange systems	Each heat exchange system used to cool process equipment in PAI manufacturing operations.	Monitoring and leak repair program as in HON.

[a] Table 9 is listed in the appendix to subpart G of 40 CFR part 63.

TABLE 3 TO SUBPART MMM OF PART 63—MONITORING REQUIREMENTS FOR CONTROL DEVICES [a]

Control device	Monitoring equipment required	Parameters to be monitored	Frequency
All control devices	1. Flow indicator installed at all bypass lines to the atmosphere and equipped with continuous recorder or.	1. Presence of flow diverted from the control device to the atmosphere or.	Hourly records of whether the flow indicator was operating and whether a diversion was detected at any time during each hour.
	2. Valves sealed closed with car-seal or lock-and-key configuration.	2. Monthly inspections of sealed valves.	Monthly.
Scrubber	Liquid flow rate or pressure drop mounting device. Also a pH monitor if the scrubber is used to control acid emissions..	1. Liquid flow rate into or out of the scrubber or the pressure drop across the scrubber..	1. Every 15 minutes.
		2. pH of effluent scrubber liquid.	2. Once a day.
Thermal incinerator	Temperature monitoring device installed in firebox or in ductwork immediately downstream of firebox [b].	Firebox temperature	Every 15 minutes.
Catalytic incinerator	Temperature monitoring device installed in gas stream immediately before and after catalyst bed.	Temperature difference across catalyst bed.	Every 15 minutes.
Flare	Heat sensing device installed at the pilot light.	Presence of a flame at the pilot light.	Every 15 minutes.
Boiler or process heater <44 megawatts and vent stream is not mixed with the primary fuel.	Temperature monitoring device installed in firebox [b].	Combustion temperature	Every 15 minutes.
Condenser	Temperature monitoring device installed at condenser exit.	Condenser exit (product side) temperature.	Every 15 minutes.
Carbon adsorber (nonregenerative).	None	Operating time since last replacement.	N/A.
Carbon adsorber (regenerative).	Stream flow monitoring device, and.	1. Total regeneration stream mass or volumetric flow during carbon bed regeneration cycle(s).	1. For each regeneration cycle, record the total regeneration stream mass or volumetric flow.
	Carbon bed temperature monitoring device.	2. Temperature of carbon bed after regeneration.	2. For each regeneration cycle, record the maximum carbon bed-temperature.
		3. Temperature of carbon bed within 15 minutes of completing any cooling cycle(s).	3. Within 15 minutes of completing any cooling cycle, record the carbon bed temperature.
		4. Operating time since end of last regeneration.	4. Operating time to be based on worst-case conditions.
		5. Check for bed poisoning	5. Yearly.

[a] As an alternative to the monitoring requirements specified in this table, the owner or operator may use a CEM meeting the requirements of Performance Specifications 8 or 9 of appendix B of part 60 to monitor TOC every 15 minutes.
[b] Monitor may be installed in the firebox or in the ductwork immediately downstream of the firebox before any substantial heat exchange is encountered.

TABLE 4 TO SUBPART MMM OF PART 63—CONTROL REQUIREMENTS FOR ITEMS OF EQUIPMENT THAT MEET THE CRITERIA OF § 63.1362(K)

Item of equipment	Control requirement [a]
Drain or drain hub	(a) Tightly fitting solid cover (TFSC); or (b) TFSC with a vent to either a process, or to a control device meeting the requirements of § 63.1256(h)(2); or (c) Water seal with submerged discharge or barrier to protect discharge from wind.

Item of equipment	Control requirement [a]
Manhole [b]	(a) TFSC; or (b) TFSC with a vent to either a process, or to a fuel gas system, or to a control device meeting the requirements of § 63.1256(h)(2); or (c) If the item is vented to the atmosphere, use a TFSC with a properly operating water seal at the entrance or exit to the item to restrict ventilation in the collection system. The vent pipe shall be at least 90 cm in length and not exceeding 10.2 cm in nominal inside diameter.
Lift station	(a) TFSC; or (b) TFSC with a vent to either a process, or to a control device meeting the requirements of § 63.1256(h)(2); or (c) If the lift station is vented to the atmosphere, use a TFSC with a properly operating water seal at the entrance or exit to the item to restrict ventilation in the collection system. The vent pipe shall be at least 90 cm in length and not exceeding 10.2 cm in nominal inside diameter. The lift station shall be level controlled to minimize changes in the liquid level.
Trench	(a) TFSC; or (b) TFSC with a vent to either a process, or to a control device meeting the requirements of § 63.1256(h)(2); or (c) If the item is vented to the atmosphere, use a TFSC with a properly operating water seal at the entrance or exit to the item to restrict ventilation in the collection system. The vent pipe shall be at least 90 cm in length and not exceeding 10.2 cm in nominal inside diameter.
Pipe	Each pipe shall have no visible gaps in joints, seals, or other emission interfaces.
Oil/Water separator	(a) Equip with a fixed roof and route vapors to a process, or equip with a closed-vent system that routes vapors to a control device meeting the requirements of § 63.1256(h)(2); or (b) Equip with a floating roof that meets the equipment specifications of § 60.693 (a)(1)(i), (a)(1)(ii), (a)(2), (a)(3), and (a)(4).
Tank	Maintain a fixed roof.[c] If the tank is sparged [d] or used for heating or treating by means of an exothermic reaction, a fixed roof and a system shall be maintained that routes the organic hazardous air pollutants vapors to other process equipment or a fuel gas system, or a closed-vent system that routes vapors to a control device that meets the requirements of 40 CFR § 63.119(e)(1) or (e)(2).

[a] Where a tightly fitting solid cover is required, it shall be maintained with no visible gaps or openings, except during periods of sampling, inspection, or maintenance.
[b] Manhole includes sumps and other points of access to a conveyance system.
[c] A fixed roof may have openings necessary for proper venting of the tank, such as pressure/vacuum vent, j-pipe vent.
[d] The liquid in the tank is agitated by injecting compressed air or gas.

Subpart NNN—National Emission Standards for Hazardous Air Pollutants for Wool Fiberglass Manufacturing

SOURCE: 64 FR 31709, June 14, 1999, unless otherwise noted.

§ 63.1380 Applicability.

(a) Except as provided in paragraphs (b) and (c) of this section, the requirements of this subpart apply to the owner or operator of each wool fiberglass manufacturing facility that is a major source or is located at a facility that is a major source.

(b) The requirements of this subpart apply to emissions of hazardous air pollutants (HAPs), as measured according to the methods and procedures in this subpart, emitted from the following new and existing sources at a wool fiberglass manufacturing facility subject to this subpart:

(1) Each new and existing glass-melting furnace located at a wool fiberglass manufacturing facility;

(2) Each new and existing rotary spin wool fiberglass manufacturing line producing a bonded wool fiberglass building insulation product; and

(3) Each new and existing flame attenuation wool fiberglass manufacturing line producing a bonded pipe product and each new flame attenuation wool fiberglass manufacturing line producing a bonded heavy-density product.

(c) The requirements of this subpart do not apply to a wool fiberglass manufacturing facility that the owner or operator demonstrates to the Administrator is not a major source as defined in § 63.2.

(d) The provisions of this part 63, subpart A that apply and those that do not apply to this subpart are specified in Table 1 of this subpart.

§ 63.1381 Definitions.

Terms used in this subpart are defined in the Clean Air Act, in § 63.2, or in this section as follows:

Bag leak detection system means systems that include, but are not limited to, devices using triboelectric, light

scattering, and other effects to monitor relative or absolute particulate matter (PM) emissions.

Bonded means wool fiberglass to which a phenol-formaldehyde binder has been applied.

Building insulation means bonded wool fiberglass insulation, having a loss on ignition of less than 8 percent and a density of less than 32 kilograms per cubic meter (kg/m^3) (2 pounds per cubic foot [lb/ft^3]).

Cold top electric furnace means an all-electric glass-melting furnace that operates with a temperature of 120 °C (250 °F) or less as measured at a location 46 to 61 centimeters (18 to 24 inches) above the molten glass surface.

Flame attenuation means a process used to produce wool fiberglass where molten glass flows by gravity from melting furnaces, or pots, to form filaments that are drawn down and attenuated by passing in front of a high-velocity gas burner flame.

Glass-melting furnace means a unit comprising a refractory vessel in which raw materials are charged, melted at high temperature, refined, and conditioned to produce molten glass. The unit includes foundations, superstructure and retaining walls, raw material charger systems, heat exchangers, melter cooling system, exhaust system, refractory brick work, fuel supply and electrical boosting equipment, integral control systems and instrumentation, and appendages for conditioning and distributing molten glass to forming processes. The forming apparatus, including flow channels, is not considered part of the glass-melting furnace.

Glass pull rate means the mass of molten glass that is produced by a single glass-melting furnace or that is used in the manufacture of wool fiberglass at a single manufacturing line in a specified time period.

Hazardous Air Pollutant (HAP) means any air pollutant listed in or pursuant to section 112(b) of the Clean Air Act.

Heavy-density product means bonded wool fiberglass insulation manufactured on a flame attenuation manufacturing line and having a loss on ignition of 11 to 25 percent and a density of 8 to 48 kg/m^3 (0.5 to 3 lb/ft^3).

Incinerator means an enclosed air pollution control device that uses controlled flame combustion to convert combustible materials to noncombustible gases.

Loss on ignition (LOI) means the percent decrease in weight of wool fiberglass after it has been ignited. The LOI is used to monitor the weight percent of binder in wool fiberglass.

Manufacturing line means the manufacturing equipment for the production of wool fiberglass that consists of a forming section where molten glass is fiberized and a fiberglass mat is formed and which may include a curing section where binder resin in the mat is thermally set and a cooling section where the mat is cooled.

New source means any affected source the construction or reconstruction of which is commenced after March 31, 1997.

Pipe product means bonded wool fiberglass insulation manufactured on a flame attenuation manufacturing line and having a loss on ignition of 8 to 14 percent and a density of 48 to 96 kg/m^3 (3 to 6 lb/ft^3).

Rotary spin means a process used to produce wool fiberglass building insulation by forcing molten glass through numerous small orifices in the side wall of a spinner to form continuous glass fibers that are then broken into discrete lengths by high-velocity air flow. Any process used to produce bonded wool fiberglass building insulation by a process other than flame attenuation is considered rotary spin.

Wool fiberglass means insulation materials composed of glass fibers made from glass produced or melted at the same facility where the manufacturing line is located.

Wool fiberglass manufacturing facility means any facility manufacturing wool fiberglass on a rotary spin manufacturing line or on a flame attenuation manufacturing line.

§63.1382 Emission standards

(a) *Emission limits*—(1) *Glass-melting furnaces*. On and after the date the initial performance test is completed or required to be completed under §63.7 of this part, whichever date is earlier, the owner or operator shall not discharge

or cause to be discharged into the atmosphere in excess of 0.25 kilogram (kg) of particulate matter (PM) per megagram (Mg) (0.5 pound [lb] of PM per ton) of glass pulled for each new or existing glass-melting furnace.

(2) *Rotary spin manufacturing lines.* On and after the date the initial performance test is completed or required to be completed under § 63.7 of this part, whichever date is earlier, the owner or operator shall not discharge or cause to be discharged into the atmosphere in excess of:

(i) 0.6 kg of formaldehyde per megagram (1.2 lb of formaldehyde per ton) of glass pulled for each existing rotary spin manufacturing line; and

(ii) 0.4 kg of formaldehyde per megagram (0.8 lb of formaldehyde per ton) of glass pulled for each new rotary spin manufacturing line.

(3) *Flame attenuation manufacturing lines.* On and after the date the initial performance test is completed or required to be completed under § 63.7 of this part, whichever date is earlier, the owner or operator shall not discharge or cause to be discharged into the atmosphere in excess of:

(i) 3.9 kg of formaldehyde per megagram (7.8 lb of formaldehyde per ton) of glass pulled for each new flame attenuation manufacturing line that produces heavy-density wool fiberglass; and

(ii) 3.4 kg of formaldehyde per megagram (6.8 lb of formaldehyde per ton) of glass pulled from each existing or new flame attenuation manufacturing line that produces pipe product wool fiberglass.

(b) *Operating limits.* On and after the date on which the performance test required to be conducted by §§ 63.7 and 63.1384 is completed, the owner or operator must operate all affected control equipment and processes according to the following requirements.

(1)(i) The owner or operator must initiate corrective action within 1 hour of an alarm from a bag leak detection system and complete corrective actions in a timely manner according to the procedures in the operations, maintenance, and monitoring plan.

(ii) The owner or operator must implement a Quality Improvement Plan (QIP) consistent with the compliance assurance monitoring provisions of 40 CFR part 64, subpart D when the bag leak detection system alarm is sounded for more than 5 percent of the total operating time in a 6-month block reporting period.

(2)(i) The owner or operator must initiate corrective action within 1 hour when any 3-hour block average of the monitored electrostatic precipitator (ESP) parameter is outside the limit(s) established during the performance test as specified in § 63.1384 and complete corrective actions in a timely manner according to the procedures in the operations, maintenance, and monitoring plan.

(ii) The owner or operator must implement a QIP consistent with the compliance assurance monitoring provisions of 40 CFR part 64 subpart D when the monitored ESP parameter is outside the limit(s) established during the performance test as specified in § 63.1384 for more than 5 percent of the total operating time in a 6-month block reporting period.

(iii) The owner or operator must operate the ESP such that the monitored ESP parameter is not outside the limit(s) established during the performance test as specified in § 63.1384 for more than 10 percent of the total operating time in a 6-month block reporting period.

(3)(i) The owner or operator must initiate corrective action within 1 hour when any 3-hour block average temperature of a cold top electric furnace as measured at a location 46 to 61 centimeters (18 to 24 inches) above the molten glass surface, exceeds 120 °C (250 °F) and complete corrective actions in a timely manner according to the procedures in the operations, maintenance, and monitoring plan.

(ii) The owner or operator of a cold top electric furnace must implement a QIP consistent with the compliance assurance monitoring provisions of 40 CFR part 64, subpart D when the temperature, as measured at a location 46 to 61 centimeters (18 to 24 inches) above the molten glass surface, exceeds 120 °C (250 °F) for more than 5 percent of the total operating time in a 6-month block reporting period.

(iii) The owner or operator must operate the cold top electric furnace such

that the temperature does not exceed 120 °C (250 °F) as measured at a location 46 to 61 centimeters (18 to 24 inches) above the molten glass surface, for more than 10 percent of the total operating time in a 6-month reporting period.

(4)(i) The owner or operator must initiate corrective action within 1 hour when any 3-hour block average value for the monitored parameter(s) for a glass-melting furnace, which uses no add-on controls and which is not a cold top electric furnace, is outside the limit(s) established during the performance test as specified in §63.1384 and complete corrective actions in a timely manner according to the procedures in the operations, maintenance, and monitoring plan.

(ii) The owner or operator must implement a QIP consistent with the compliance assurance monitoring provisions of 40 CFR Part 64 subpart D when the monitored parameter(s) is outside the limit(s) established during the performance test as specified in §63.1384 for more than 5 percent of the total operating time in a 6-month block reporting period.

(iii) The owner or operator must operate a glass-melting furnace, which uses no add-on controls and which is not a cold top electric furnace, such that the monitored parameter(s) is not outside the limit(s) established during the performance test as specified in §63.1384 for more than 10 percent of the total operating time in a 6-month block reporting period.

(5)(i) The owner or operator must initiate corrective action within 1 hour when the average glass pull rate of any 4-hour block period for glass melting furnaces equipped with continuous glass pull rate monitors, or daily glass pull rate for glass melting furnaces not so equipped, exceeds the average glass pull rate established during the performance test as specified in §63.1384, by greater than 20 percent and complete corrective actions in a timely manner according to the procedures in the operations, maintenance, and monitoring plan.

(ii) The owner or operator must implement a QIP consistent with the compliance assurance monitoring provisions of 40 CFR part 64, subpart D when the glass pull rate exceeds, by more than 20 percent, the average glass pull rate established during the performance test as specified in §63.1384 for more than 5 percent of the total operating time in a 6-month block reporting period.

(iii) The owner or operator must operate each glass-melting furnace such that the glass pull rate does not exceed, by more than 20 percent, the average glass pull rate established during the performance test as specified in §63.1384 for more than 10 percent of the total operating time in a 6-month block reporting period.

(6) The owner or operator must operate each incinerator used to control formaldehyde emissions from forming or curing such that any 3-hour block average temperature in the firebox does not fall below the average established during the performance test as specified in §63.1384.

(7)(i) The owner or operator must initiate corrective action within 1 hour when the average pressure drop, liquid flow rate, or chemical feed rate for any 3-hour block period is outside the limits established during the performance tests as specified in §63.1384 for each wet scrubbing control device and complete corrective actions in a timely manner according to the procedures in the operations, maintenance, and monitoring plan.

(ii) The owner or operator must implement a QIP consistent with the compliance assurance monitoring provisions of 40 CFR part 64, subpart D when any scrubber parameter is outside the limit(s) established during the performance test as specified in §63.1384 for more than 5 percent of the total operating time in a 6-month block reporting period.

(iii) The owner or operator must operate each scrubber such that each monitored parameter is not outside the limit(s) established during the performance test as specified in §63.1384 for more than 10 percent of the total operating time in a 6-month block reporting period.

(8)(i) The owner or operator must initiate corrective action within 1 hour when the monitored process parameter level(s) is outside the limit(s) established during the performance test as

specified in § 63.1384 for the process modification(s) used to control formaldehyde emissions and complete corrective actions in a timely manner according to the procedures in the operations, maintenance, and monitoring plan.

(ii) The owner or operator must implement a QIP consistent with the compliance assurance monitoring provisions of 40 CFR part 64, subpart D when the process parameter(s) is outside the limit(s) established during the performance test as specified in § 63.1384 for more than 5 percent of the total operating time in a 6-month block reporting period.

(iii) The owner or operator must operate the process modifications such that the monitored process parameter(s) is not outside the limit(s) established during the performance test as specified in § 63.1384 for more than 10 percent of the total operating time in a 6-month block reporting period.

(9) The owner or operator must use a resin in the formulation of binder such that the free-formaldehyde content of the resin used does not exceed the free-formaldehyde range contained in the specification for the resin used during the performance test as specified in § 63.1384.

(10) The owner or operator must use a binder formulation that does not vary from the specification and operating range established and used during the performance test as specified in § 63.1384. For the purposes of this standard, adding or increasing the quantity of urea and/or lignin in the binder formulation does not constitute a change in the binder formulation.

§ 63.1383 Monitoring requirements.

On and after the date on which the performance test required to be conducted by §§ 63.7 and 63.1384 is completed, the owner or operator must monitor all affected control equipment and processes according to the following requirements.

(a) The owner or operator of each wool fiberglass manufacturing facility must prepare for each glass-melting furnace, rotary spin manufacturing line, and flame attenuation manufacturing line subject to the provisions of this subpart, a written operations, maintenance, and monitoring plan. The plan must be submitted to the Administrator for review and approval as part of the application for a part 70 permit. The plan must include the following information:

(1) Procedures for the proper operation and maintenance of process modifications and add-on control devices used to meet the emission limits in § 63.1382;

(2) Procedures for the proper operation and maintenance of monitoring devices used to determine compliance, including quarterly calibration and certification of accuracy of each monitoring device according to the manufacturers's instructions; and

(3) Corrective actions to be taken when process parameters or add-on control device parameters deviate from the limit(s) established during initial performance tests.

(b)(1) Where a baghouse is used to control PM emissions from a glass-melting furnace, the owner or operator shall install, calibrate, maintain, and continuously operate a bag leak detection system.

(i) The bag leak detection system must be certified by the manufacturer to be capable of detecting PM emissions at concentrations of 10 milligrams per actual cubic meter (0.0044 grains per actual cubic foot) or less.

(ii) The bag leak detection system sensor must produce output of relative PM emissions.

(iii) The bag leak detection system must be equipped with an alarm system that will sound automatically when an increase in relative PM emissions over a preset level is detected and the alarm must be located such that it can be heard by the appropriate plant personnel.

(iv) For positive pressure fabric filter systems, a bag leak detection system must be installed in each baghouse compartment or cell. If a negative pressure or induced air baghouse is used, the bag leak detection system must be installed downstream of the baghouse. Where multiple bag leak detection systems are required (for either type of baghouse), the system instrumentation and alarm may be shared among the monitors.

(v) A triboelectric bag leak detection system shall be installed, operated, adjusted, and maintained in a manner consistent with the U.S. Environmental Protection Agency guidance, ''Fabric Filter Bag Leak Detection Guidance'' (EPA–454/R–98–015, September 1997). Other bag leak detection systems shall be installed, operated, adjusted, and maintained in a manner consistent with the manufacturer's written specifications and recommendations.

(vi) Initial adjustment of the system shall, at a minimum, consist of establishing the baseline output by adjusting the range and the averaging period of the device and establishing the alarm set points and the alarm delay time.

(vii) Following the initial adjustment, the owner or operator shall not adjust the range, averaging period, alarm setpoints, or alarm delay time except as detailed in the approved operations, maintenance, and monitoring plan required under paragraph (a) of this section. In no event shall the range be increased by more than 100 percent or decreased more than 50 percent over a 365-day period unless a responsible official as defined in §63.2 of the general provisions in subpart A of this part certifies that the baghouse has been inspected and found to be in good operating condition.

(2) The operations, maintenance, and monitoring plan required by paragraph (a) of this section must specify corrective actions to be followed in the event of a bag leak detection system alarm. Example corrective actions that may be included in the plan include the following:

(i) Inspecting the baghouse for air leaks, torn or broken bags or filter media, or any other conditions that may cause an increase in emissions.

(ii) Sealing off defective bags or filter media.

(iii) Replacing defective bags or filter media, or otherwise repairing the control device.

(iv) Sealing off a defective baghouse compartment.

(v) Cleaning the bag leak detection system probe, or otherwise repairing the bag leak detection system.

(vi) Shutting down the process producing the particulate emissions.

(c)(1) Where an ESP is used to control PM emissions from a glass-melting furnace, the owner or operator must monitor the ESP according to the procedures in the operations, maintenance, and monitoring plan. (2)The operations, maintenance, and monitoring plan for the ESP must contain the following information:

(i) The ESP operating parameter(s), such as secondary voltage of each electrical field, to be monitored and the minimum and/or maximum value(s) that will be used to identify any operational problems;

(ii) A schedule for monitoring the ESP operating parameter(s);

(iii) Recordkeeping procedures, consistent with the recordkeeping requirements of §63.1386, to show that the ESP operating parameter(s) is within the limit(s) established during the performance test; and

(iv) Procedures for the proper operation and maintenance of the ESP.

(d) The owner or operator must measure and record at least once per shift the temperature 46 to 61 centimeters (18 to 24 inches) above the surface of the molten glass in a cold top electric furnace that does not use any add-on controls to control PM emissions.

(e)(1) Where a glass-melting furnace is operated without an add-on control device to control PM emissions, the owner or operator must monitor the glass-melting furnace according to the procedures in the operations, maintenance, and monitoring plan.

(2) The operations, maintenance, and monitoring plan for the glass-melting furnace must contain the following information:

(i) The operating parameter(s) to be monitored and the minimum and/or maximum value(s) that will be used to identify any operational problems;

(ii) A schedule for monitoring the operating parameter(s) of the glass-melting furnace;

(iii) Recordkeeping procedures, consistent with the recordkeeping requirements of §63.1386, to show that the glass-melting furnace parameter(s) is within the limit(s) established during the performance test; and

(iv) Procedures for the proper operation and maintenance of the glass-melting furnace.

(f)(1) The owner or operator of an existing glass-melting furnace equipped with continuous glass pull rate monitors must monitor and record the glass pull rate on an hourly basis. For glass-melting furnaces that are not equipped with continuous glass pull rate monitors, the glass pull rate must be monitored and recorded once per day.

(2) On any new glass-melting furnace, the owner or operator must install, calibrate, and maintain a continuous glass pull rate monitor that monitors and records on an hourly basis the glass pull rate.

(g)(1) The owner or operator who uses an incinerator to control formaldehyde emissions from forming or curing shall install, calibrate, maintain, and operate a monitoring device that continuously measures and records the operating temperature in the firebox of each incinerator.

(2) The owner or operator must inspect each incinerator at least once per year according to the procedures in the operations, maintenance, and monitoring plan. At a minimum, an inspection must include the following:

(i) Inspect all burners, pilot assemblies, and pilot sensing devices for proper operation and clean pilot sensor, as necessary;

(ii) Ensure proper adjustment of combustion air and adjust, as necessary;

(iii) Inspect, when possible, internal structures, for example, baffles, to ensure structural integrity per the design specifications;

(iv) Inspect dampers, fans, and blowers for proper operation;

(v) Inspect for proper sealing;

(vi) Inspect motors for proper operation;

(vii) Inspect combustion chamber refractory lining and clean and repair/replace lining, as necessary;

(viii) Inspect incinerator shell for corrosion and/or hot spots;

(ix) For the burn cycle that follows the inspection, document that the incinerator is operating properly and make any necessary adjustments; and

(x) Generally observe that the equipment is maintained in good operating condition.

(xi) Complete all necessary repairs as soon as practicable.

(h) The owner or operator who uses a wet scrubbing control device to control formaldehyde emissions must install, calibrate, maintain, and operate monitoring devices that continuously monitor and record the gas pressure drop across each scrubber and scrubbing liquid flow rate to each scrubber according to the procedures in the operations, maintenance, and monitoring plan. The pressure drop monitor is to be certified by its manufacturer to be accurate within ±250 pascals (±1 inch water gauge) over its operating range, and the flow rate monitor is to be certified by its manufacturer to be accurate within ±5 percent over its operating range. The owner or operator must also continuously monitor and record the feed rate of any chemical(s) added to the scrubbing liquid.

(i)(1) The owner or operator who uses process modifications to control formaldehyde emissions must establish a correlation between formaldehyde emissions and a process parameter(s) to be monitored.

(2) The owner or operator must monitor the established parameter(s) according to the procedures in the operations, maintenance, and monitoring plan.

(3) The owner or operator must include as part of their operations, maintenance, and monitoring plan the following information:

(i) Procedures for the proper operation and maintenance of the process;

(ii) Process parameter(s) to be monitored to demonstrate compliance with the applicable emission limits in § 63.1382. Examples of process parameters include LOI, binder solids content, and binder application rate;

(iii) Correlation(s) between process parameter(s) to be monitored and formaldehyde emissions;

(iv) A schedule for monitoring the process parameter(s); and

(v) Recordkeeping procedures, consistent with the recordkeeping requirements of § 63.1386, to show that the process parameter value(s) established

during the performance test is not exceeded.

(j) The owner or operator must monitor and record the free-formaldehyde content of each resin shipment received and used in the formulation of binder.

(k) The owner or operator must monitor and record the formulation of each batch of binder used.

(l) The owner or operator must monitor and record at least once every 8 hours, the product LOI and product density of each bonded wool fiberglass product manufactured.

(m) For all control device and process operating parameters measured during the initial performance tests, the owners or operators of glass-melting furnaces, rotary spin manufacturing lines or flame attenuation manufacturing lines subject to this subpart may change the limits established during the initial performance tests if additional performance testing is conducted to verify that, at the new control device or process parameter levels, they comply with the applicable emission limits in §63.1382. The owner or operator shall conduct all additional performance tests according to the procedures in this part 63, subpart A and in §63.1384.

§63.1384 Performance test requirements.

(a) The owner or operator subject to the provisions of this subpart shall conduct a performance test to demonstrate compliance with the applicable emission limits in §63.1382. Compliance is demonstrated when the emission rate of the pollutant is equal to or less than each of the applicable emission limits in §63.1382. The owner or operator shall conduct the performance test according to the procedures in 40 CFR part 63, subpart A and in this section.

(1) All monitoring systems and equipment must be installed, operational, and calibrated prior to the performance test.

(2) Unless a different frequency is specified in this section, the owner or operator must monitor and record process and/or add-on control device parameters at least every 15 minutes during the performance tests. The arithmetic average for each parameter must be calculated using all of the recorded measurements for the parameter.

(3) During each performance test, the owner or operator must monitor and record the glass pull rate for each glass-melting furnace and, if different, the glass pull rate for each rotary spin manufacturing line and flame attenuation manufacturing line. Record the glass pull rate every 15 minutes during any performance test required by this subpart and determine the arithmetic average of the recorded measurements for each test run and calculate the average of the three test runs.

(4) The owner or operator shall conduct a performance test for each existing and new glass-melting furnace.

(5) During the performance test, the owner or operator of a glass-melting furnace controlled by an ESP shall monitor and record the ESP parameter level(s), as specified in the operations, maintenance, and monitoring plan, and establish the minimum and/or maximum value(s) that will be used to demonstrate compliance after the initial performance test.

(6) During the performance test, the owner or operator of a cold top electric furnace that is not equipped with an add-on control device for PM emissions control, must monitor and record the temperature 46 to 61 centimeters (18 to 24 inches) above the molten glass surface to ensure that the maximum temperature does not exceed 120 °C (250 °F).

(7) During the performance test, the owner or operator of a glass melting furnace (other than a cold top electric furnace) that is not equipped with an add-on control device for PM emissions control, must monitor and record the furnace parameter level, and establish the minimum and/or maximum value(s) that will be used to demonstrate compliance after the initial performance test.

(8) The owner or operator must conduct a performance test for each rotary spin manufacturing line, subject to this subpart, while producing the building insulation with the highest LOI expected to be produced on that line; and for each flame attenuation manufacturing line, subject to this subpart, while producing the heavy-density

product or pipe product with the highest LOI expected to be produced on the affected line.

(9) The owner or operator of each rotary spin manufacturing line and flame attenuation manufacturing line regulated by this subpart must conduct performance tests using the resin with the highest free-formaldehyde content. During the performance test of each rotary spin manufacturing line and flame attenuation manufacturing line regulated by this subpart, the owner or operator shall monitor and record the free-formaldehyde content of the resin, the binder formulation used, and the product LOI and density.

(10) During the performance test, the owner or operator of a rotary spin manufacturing line or flame attenuation manufacturing line who plans to use process modifications to comply with the emission limits in § 63.1382 must monitor and record the process parameter level(s), as specified in the operations, maintenance, and monitoring plan, which will be used to demonstrate compliance after the initial performance test.

(11) During the performance test, the owner or operator of a rotary spin manufacturing line or flame attenuation manufacturing line who plans to use a wet scrubbing control device to comply with the emission limits in § 63.1382 must continuously monitor and record the pressure drop across the scrubber, the scrubbing liquid flow rate, and addition of any chemical to the scrubber, including the chemical feed rate, and establish the minimum and/or maximum value(s) that will be used to determine compliance after the initial performance test.

(12) During the performance test, the owner or operator of a rotary spin manufacturing line or affected flame attenuation manufacturing line shall continuously record the operating temperature of each incinerator and record the average during each 1-hour test; the average operating temperature of the three 1-hour tests shall be used to monitor compliance.

(13) Unless disapproved by the Administrator, an owner or operator of a rotary spin or flame attenuation manufacturing line regulated by this subpart may conduct short-term experimental production runs using binder formulations or other process modifications where the process parameter values would be outside those established during performance tests without first conducting performance tests. Such runs must not exceed 1 week in duration unless the Administrator approves a longer period. The owner or operator must notify the Administrator and postmark or deliver the notification at least 15 days prior to commencement of the short-term experimental production runs. The Administrator must inform the owner or operator of a decision to disapprove or must request additional information prior to the date of the short-term experimental production runs. Notification of intent to perform an experimental short-term production run shall include the following information:

(i) The purpose of the experimental production run;

(ii) The affected line;

(iii) How the established process parameters will deviate from previously approved levels;

(iv) The duration of the experimental production run;

(v) The date and time of the experimental production run; and

(vi) A description of any emission testing to be performed during the experimental production run.

(b) To determine compliance with the PM emission limit for glass-melting furnaces, use the following equation:

$$E = \frac{C \times Q \times K_1}{P} \qquad \text{(Eq. 1)}$$

Where:

E = Emission rate of PM, kg/Mg (lb/ton) of glass pulled;

C = Concentration of PM, g/dscm (gr/dscf);

Q = Volumetric flow rate of exhaust gases, dscm/h (dscf/h);

K_1 = Conversion factor, 1 kg/1,000 g (1 lb/7,000 gr); and

P = Average glass pull rate, Mg/h (tons/h).

(c) To determine compliance with the emission limit for formaldehyde for rotary spin manufacturing lines and flame attenuation forming processes, use the following equation:

$$E = \frac{C \times MW \times Q \times K_1 \times K_2}{K_3 \times P \times 10^6} \qquad \text{(Eq. 2)}$$

Where:

E = Emission rate of formaldehyde, kg/Mg (lb/ton) of glass pulled;
C = Measured volume fraction of formaldehyde, ppm;
MW = Molecular weight of formaldehyde, 30.03 g/g-mol;
Q = Volumetric flow rate of exhaust gases, dscm/h (dscf/h);
K_1 = Conversion factor, 1 kg/1,000 g (1 lb/453.6 g);
K_2 = Conversion factor, 1,000 L/m^3 (28.3 L/ft^3);
K_3 = Conversion factor, 24.45 L/g-mol; and
P = Average glass pull rate, Mg/h (tons/h).

§63.1385 Test methods and procedures.

(a) The owner or operator shall use the following methods to determine compliance with the applicable emission limits:

(1) Method 1 (40 CFR part 60, appendix A) for the selection of the sampling port location and number of sampling ports;

(2) Method 2 (40 CFR part 60, appendix A) for volumetric flow rate;

(3) Method 3 or 3A (40 CFR part 60, appendix A) for O_2 and CO_2 for diluent measurements needed to correct the concentration measurements to a standard basis;

(4) Method 4 (40 CFR part 60, appendix A) for moisture content of the stack gas;

(5) Method 5 (40 CFR part 60, appendix A) for the concentration of PM. Each run shall consist of a minimum run time of 2 hours and a minimum sample volume of 60 dry standard cubic feet (dscf). The probe and filter holder heating system may be set to provide a gas temperature no greater than 177 ±14 °C (350 ±25 °F);

(6) Method 316 or Method 318 (appendix A of this part) for the concentration of formaldehyde. Each run shall consist of a minimum run time of 1 hour;

(7) Method contained in appendix A of this subpart for the determination of product LOI;

(8) Method contained in appendix B of this subpart for the determination of the free-formaldehyde content of resin;

(9) Method contained in appendix C of this subpart for the determination of product density;

(10) An alternative method, subject to approval by the Administrator.

(b) Each performance test shall consist of 3 runs. The owner or operator shall use the average of the three runs in the applicable equation for determining compliance.

§63.1386 Notification, recordkeeping, and reporting requirements.

(a) *Notifications*. As required by §63.9(b) through (h) of this part, the owner or operator shall submit the following written initial notifications to the Administrator:

(1) Notification for an area source that subsequently increases its emissions such that the source is a major source subject to the standard;

(2) Notification that a source is subject to the standard, where the initial startup is before June 14, 2002.

(3) Notification that a source is subject to the standard, where the source is new or has been reconstructed, the initial startup is after June 14, 2002, and for which an application for approval of construction or reconstruction is not required;

(4) Notification of intention to construct a new major source or reconstruct a major source; of the date construction or reconstruction commenced; of the anticipated date of startup; of the actual date of startup, where the initial startup of a new or reconstructed source occurs after June 14, 2002, and for which an application for approval or construction or reconstruction is required (See §63.9(b)(4) and (5) of this part);

(5) Notification of special compliance obligations;

(6) Notification of performance test; and (7) Notification of compliance status.

(b) *Performance test report*. As required by §63.10(d)(2) of the general provisions, the owner or operator shall report the results of the initial performance test as part of the notification of compliance status required in paragraph (a)(7) of this section.

(c) *Startup, shutdown, and malfunction plan and reports*. (1) The owner or operator shall develop and implement a

written plan as described in § 63.6(e)(3) of this part that contains specific procedures to be followed for operating the source and maintaining the source during periods of startup, shutdown, and malfunction and a program of corrective action for malfunctioning process modifications and control systems used to comply with the standard. In addition to the information required in § 63.6(e)(3), the plan shall include:

(i) Procedures to determine and record the cause of the malfunction and the time the malfunction began and ended;

(ii) Corrective actions to be taken in the event of a malfunction of a control device or process modification, including procedures for recording the actions taken to correct the malfunction or minimize emissions; and

(iii) A maintenance schedule for each control device and process modification that is consistent with the manufacturer's instructions and recommendations for routine and long-term maintenance.

(2) The owner or operator shall also keep records of each event as required by § 63.10(b) of this part and record and report if an action taken during a startup, shutdown, or malfunction is not consistent with the procedures in the plan as described in § 63.10(e)(3)(iv) of this part.

(d) *Recordkeeping*. (1) As required by § 63.10(b) of this part, the owner or operator shall maintain files of all information (including all reports and notifications) required by the general provisions and this subpart:

(i) The owner or operator must retain each record for at least 5 years following the date of each occurrence, measurement, maintenance, corrective action, report, or record. The most recent 2 years of records must be retained at the facility. The remaining 3 years of records may be retained off site;

(ii) The owner or operator may retain records on microfilm, on a computer, on computer disks, on magnetic tape, or on microfiche; and

(iii) The owner or operator may report required information on paper or on a labeled computer disk using commonly available and EPA-compatible computer software.

(2) In addition to the general records required by § 63.10(b)(2) of this part, the owner or operator shall maintain records of the following information:

(i) Any bag leak detection system alarms, including the date and time of the alarm, when corrective actions were initiated, the cause of the alarm, an explanation of the corrective actions taken, and when the cause of the alarm was corrected;

(ii) ESP parameter value(s) used to monitor ESP performance, including any period when the value(s) deviated from the established limit(s), the date and time of the deviation, when corrective actions were initiated, the cause of the deviation, an explanation of the corrective actions taken, and when the cause of the deviation was corrected;

(iii) Air temperature above the molten glass in an uncontrolled cold top electric furnace, including any period when the temperature exceeded 120 °C (250 °F) at a location 46 to 61 centimeters (18 to 24 inches) above the molten glass surface, the date and time of the exceedance, when corrective actions were initiated, the cause of the exceedance, an explanation of the corrective actions taken, and when the cause of the exceedance was corrected;

(iv) Uncontrolled glass-melting furnace (that is not a cold top electric furnace) parameter value(s) used to monitor furnace performance, including any period when the value(s) exceeded the established limit(s), the date and time of the exceedance, when corrective actions were initiated, the cause of the exceedance, an explanation of the corrective actions taken, and when the cause of the exceedance was corrected;

(v) The formulation of each binder batch and the LOI and density for each product manufactured on a rotary spin manufacturing line or flame attenuation manufacturing line subject to the provisions of this subpart, and the free formaldehyde content of each resin shipment received and used in the binder formulation;

(vi) Process parameter level(s) for RS and FA manufacturing lines that use process modifications to comply with the emission limits, including any period when the parameter level(s) deviated from the established limit(s), the date and time of the deviation, when

corrective actions were initiated, the cause of the deviation, an explanation of the corrective actions taken, and when the cause of the deviation was corrected;

(vii) Scrubber pressure drop, scrubbing liquid flow rate, and any chemical additive (including chemical feed rate to the scrubber), including any period when a parameter level(s) deviated from the established limit(s), the date and time of the deviation, when corrective actions were initiated, the cause of the deviation, an explanation of the corrective actions taken, and when the cause of the deviation was corrected;

(viii) Incinerator operating temperature and results of periodic inspection of incinerator components, including any period when the temperature fell below the established average or the inspection identified problems with the incinerator, the date and time of the problem, when corrective actions were initiated, the cause of the problem, an explanation of the corrective actions taken, and when the cause of the problem was corrected;

(ix) Glass pull rate, including any period when the pull rate exceeded the average pull rate established during the performance test by more than 20 percent, the date and time of the exceedance, when corrective actions were initiated, the cause of the exceedance, an explanation of the corrective actions taken, and when the cause of the exceedance was corrected.

(e) *Excess emissions report.* As required by § 63.10(e)(3)(v) of this part, the owner or operator shall report semiannually if measured emissions are in excess of the applicable standard or a monitored parameter deviates from the levels established during the performance test. The report shall contain the information specified in § 63.10(c) of this part as well as the additional records required by the recordkeeping requirements of paragraph (d) of this section. When no deviations have occurred, the owner or operator shall submit a report stating that no excess emissions occurred during the reporting period.

§ 63.1387 Compliance dates.

(a) *Compliance dates.* The owner or operator subject to the provisions of this subpart shall demonstrate compliance with the requirements of this subpart by no later than:

(1) June 14, 2002, for an existing glass-melting furnace, rotary spin manufacturing line, or flame attenuation manufacturing line; or

(2) Upon startup for a new glass-melting furnace, rotary spin manufacturing line, or flame attenuation manufacturing line.

(b) *Compliance extension.* The owner or operator of an existing source subject to this subpart may request from the Administrator an extension of the compliance date for the emission standards for one additional year if such additional period is necessary for the installation of controls. The owner or operator shall submit a request for an extension according to the procedures in § 63.6(i)(3) of this part.

§§ 63.1388–63.1399 [Reserved]

TABLE 1 TO SUBPART NNN OF PART 63—APPLICABILITY OF GENERAL PROVISIONS (40 CFR PART 63, SUBPART A) TO SUBPART NNN

General provisions citation	Requirement	Applies to subpart NNN	Explanation
63.1(a)(1)–(a)(4)	Applicability	Yes.	
63.1(a)(5)		No	[Reserved].
63.1(a)(6)–(a)(8)		Yes.	
63.1(a)(9)		No	[Reserved].
63.1(a)(10)–(a)(14)		Yes.	
63.1(b)(1)–(b)(3)	Initial Applicability Determination	Yes.	
63.1(c)(1)–(c)(2)	Applicability After Standard Established.	Yes.	
63.1(c)(3)		No	[Reserved].
63.1(c)(4)–(c)(5)		Yes.	
63.1(d)		No	[Reserved].
63.1(e)	Applicability of Permit Program	Yes.	
63.2	Definitions	Yes	Additional definitions in § 63.1381.
63.3(a)–(c)	Units and Abbreviations	Yes.	
63.4(a)(1)–(a)(3)	Prohibited Activities	Yes.	

General provisions citation	Requirement	Applies to subpart NNN	Explanation
63.4(a)(4)		No	[Reserved].
63.4(a)(5)		Yes.	
63.4(b)–(c)		Yes.	
63.5(a)(1)–(a)(2)	Construction/Reconstruction	Yes.	
63.5(b)(1)	Existing, New, Reconstructed	Yes.	
63.5(b)(2)		No	[Reserved].
63.5(b)(3)–(b)(6)		Yes.	
63.5(c)		No	[Reserved].
63.5(d)	Approval of Construction/Reconstruction.	Yes.	
63.5(e)		Yes.	
63.5(f)		Yes.	
63.6(a)	Compliance with Standards and Maintenance Requirements.	Yes.	
63.6(b)(1)–(b)(5)		Yes.	
63.6(b)(6)		No	[Reserved].
63.6(b)(7)		Yes.	
63.6(c)(1)	Compliance Date for Existing Sources.	Yes	§63.1387 specifies compliance dates.
63.6(c)(2)		Yes.	
63.6(c)(3)–(c)(4)		No	[Reserved].
63.6(c)(5)		Yes.	
63.6(d)		No	[Reserved].
63.6(e)(1)–(e)(2)	Operation & Maintenance	Yes	§63.1383 specifies operations/maintenance plan.
63.6(e)(3)	Startup, Shutdown Malfunction Plan	Yes.	
63.6(f)(1)–(f)(3)	Compliance with Nonopacity Emission Standards.	Yes.	
63.6(g)(1)–(g)(3)	Alternative Nonopacity Standard	Yes.	
63.6(h)	Opacity/VE Standards	No	Subpart NNN-no COMS, VE or opacity standards.
63.6(i)(1)–(i)(14)	Extension of Compliance	Yes.	
63.6(i)(15)		No	[Reserved].
63.6(i)(16)		Yes.	
63.6(j)	Exemption from Compliance	Yes.	
63.7(a)	Performance Testing Requirements	Yes	§63.1384 has specific requirements.
63.7(b)	Notification	Yes.	
63.7(c)	Quality Assurance Program/Test Plan.	Yes.	
63.7(d)	Performance Testing Facilities	Yes.	
63.7(e)(1)–(e)(4)	Conduct of Performance Tests	Yes.	
63.7(f)	Alternative Test Method	Yes.	
63.7(g)	Data Analysis	Yes.	
63.7(h)	Waiver of Performance Tests	Yes.	
63.8(a)(1)–(a)(2)	Monitoring Requirements	Yes.	
63.8(a)(3)		No	[Reserved].
63.8(a)(4)		Yes.	
63.8(b)	Conduct of Monitoring	Yes.	
63.8(c)	CMS Operation/Maintenance	Yes.	
63.8(d)	Quality Control Program	Yes.	
63.8(e)	Performance Evaluation for CMS	Yes.	
63.8(f)	Alternative Monitoring Method	Yes.	
63.8(g)	Reduction of Monitoring Data	Yes.	
63.9(a)	Notification Requirements	Yes.	
63.9(b)	Initial Notifications	Yes.	
63.9(c)	Request for Compliance Extension	Yes.	
63.9(d)	New Source Notification for Special Compliance Requirements.	Yes.	
63.9(e)	Notification of Performance Test	Yes.	
63.9(f)	Notification of VE/Opacity Test	No	Opacity/VE tests not required.
63.9(g)	Additional CMS Notifications	Yes.	
63.9(h)(1)–(h)(3)	Notification of Compliance Status	Yes.	
63.9(h)(4)		No	[Reserved].
63.9(h)(5)–(h)(6)		Yes.	
63.9(i)	Adjustment of Deadlines	Yes.	
63.9(j)	Change in Previous Information	Yes.	
63.10(a)	Recordkeeping/Reporting	Yes.	
63.10(b)	General Requirements	Yes.	
63.10(c)(1)	Additional CMS Recordkeeping	Yes.	
63.10(c)(2)–(c)(4)		No	[Reserved].
63.10(c)(5)–(c)(8)		Yes.	
63.10(c)(9)		No	[Reserved].

General provisions citation	Requirement	Applies to subpart NNN	Explanation
63.10(c)(10)–(15)		Yes.	
63.10(d)(1)	General Reporting Requirements	Yes.	
63.10(d)(2)	Performance Test Results	Yes.	
63.10(d)(3)	Opacity or VE Observations	No	No limits for VE/opacity.
63.10(d)(4)	Progress Reports	Yes.	
63.10(d)(5)	Startup, Shutdown, Malfunction Reports.	Yes.	
63.10(e)(1)–(e)(3)	Additional CMS Reports	Yes.	
63.10(e)(4)	Reporting COM Data	No	COM not required.
63.10(f)	Waiver of Recordkeeping/Reporting	Yes.	
63.11(a)	Control Device Requirements	Yes.	
63.11(b)	Flares	No	Flares not applicable.
63.12	State Authority and Delegations	Yes.	
63.13	State/Regional Addresses	Yes.	
63.14	Incorporation by Reference	No.	
63.15	Availability of Information	Yes.	

Appendix A to Subpart NNN of Part 63—Method for the Determination of LOI

1. Purpose

The purpose of this test is to determine the LOI of cured blanket insulation. The method is applicable to all cured board and blanket products.

2. Equipment

2.1 Scale sensitive to 0.1 gram.

2.2 Furnace designed to heat to at least 540 °C (1,000 °F) and controllable to ±10 °C (50 °F).

2.3 Wire tray for holding specimen while in furnace.

3. Procedure

3.1 Cut a strip along the entire width of the product that will weigh at least 10.0 grams. Sample should be free of dirt or foreign matter.

NOTE: Remove all facing from sample.

3.2 Cut the sample into pieces approximately 12 inches long, weigh to the nearest 0.1 gram and record. Place in wire tray. Sample should not be compressed or overhang on tray edges.

NOTE: On air duct products, remove shiplaps and overspray.

3.3 Place specimen in furnace at 540 °C (1,000 °F), ±10 °C (50 °F) for 15 to 20 minutes to insure complete oxidation. After ignition, fibers should be white and should not be fused together.

3.4 Remove specimen from the furnace and cool to room temperature.

3.5 Weigh cooled specimen and wire tray to the nearest 0.1 gram. Deduct the weight of the wire tray and then calculate the loss in weight as a percent of the original specimen weight.

Appendix B to Subpart NNN of Part 63—Free Formaldehyde Analysis of Insulation Resins by Hydroxylamine Hydrochloride

1. Scope

This method was specifically developed for water-soluble phenolic resins that have a relatively high free-formaldehyde (FF) content such as insulation resins. It may also be suitable for other phenolic resins, especially those with a high FF content.

2. Principle

2.1 a. The basis for this method is the titration of the hydrochloric acid that is liberated when hydroxylamine hydrochloride reacts with formaldehyde to form formaldoxine:

$$HCHO + NH_2OH{:}HCl \rightarrow CH_2{:}NOH + H_2O + HCl$$

b. Free formaldehyde in phenolic resins is present as monomeric formaldehyde, hemiformals, polyoxymethylene hemiformals, and polyoxymethylene glycols. Monomeric formaldehyde and hemiformals react rapidly with hydroxylamine hydrochloride, but the polymeric forms of formaldehyde must hydrolyze to the monomeric state before they can react. The greater the concentration of free formaldehyde in a resin, the more of that formaldehyde will be in the polymeric form. The hydrolysis of these polymers is catalyzed by hydrogen ions.

2.2 The resin sample being analyzed must contain enough free formaldehyde so that the initial reaction with hydroxylamine hydrochloride will produce sufficient hydrogen ions to catalyze the depolymerization of the polymeric formaldehyde within the time limits of the test method. The sample should contain approximately 0.3 grams free formaldehyde to ensure complete reaction within 5 minutes.

3. Apparatus

3.1 Balance, readable to 0.01 g or better.
3.2 pH meter, standardized to pH 4.0 with pH 4.0 buffer and pH 7 with pH 7.0 buffer.
3.3 50-mL burette for 1.0 N sodium hydroxide.
3.4 Magnetic stirrer and stir bars.
3.5 250-mL beaker.
3.6 50-mL graduated cylinder.
3.7 100-mL graduated cylinder.
3.8 Timer.

4. Reagents

4.1 Standardized 1.0 N sodium hydroxide solution.
4.2 Hydroxylamine hydrochloride solution, 100 grams per liter, pH adjusted to 4.00.
4.3 Hydrochloric acid solution, 1.0 N and 0.1 N.
4.4 Sodium hydroxide solution, 0.1 N.
4.5 50/50 v/v mixture of distilled water and methyl alcohol.

5. Procedure

5.1 Determine the sample size as follows:
a. If the expected FF is greater than 2 percent, go to Part A to determine sample size.
b. If the expected FF is less than 2 percent, go to Part B to determine sample size.
c. Part A: Expected FF ≥ 2 percent.

Grams resin = 60/expected percent FF

i. The following table shows example levels:

Expected % free formaldehyde	Sample size, grams
2	30.0
5	12.0
8	7.5
10	6.0
12	5.0
15	4.0

ii. It is very important to the accuracy of the results that the sample size be chosen correctly. If the milliliters of titrant are less than 15 mL or greater than 30 mL, reestimate the needed sample size and repeat the tests.

d. Part B: Expected FF < 2 percent

Grams resin = 30/expected percent FF

i. The following table shows example levels:

Expected % free formaldehyde	Sample size, grams
2	15
1	30
0.5	60

ii. If the milliliters of titrant are less than 5 mL or greater than 30 mL, reestimate the needed sample size and repeat the tests.

5.2 Weigh the resin sample to the nearest 0.01 grams into a 250-mL beaker. Record sample weight.
5.3 Add 100 mL of the methanol/water mixture and stir on a magnetic stirrer. Confirm that the resin has dissolved.
5.4 Adjust the resin/solvent solution to pH 4.0, using the prestandardized pH meter, 1.0 N hydrochloric acid, 0.1 N hydrochloric acid, and 0.1 N sodium hydroxide.
5.5 Add 50 mL of the hydroxylamine hydrochloride solution, measured with a graduated cylinder. Start the timer.
5.6 Stir for 5 minutes. Titrate to pH 4.0 with standardized 1.0 N sodium hydroxide. Record the milliliters of titrant and the normality.

6. Calculations

$$\% \text{ FF} = \frac{\text{mL sodium hydroxide} \times \text{normality} \times 3.003}{\text{grams of sample}}$$

7. Method Precision and Accuracy

Test values should conform to the following statistical precision:

Variance = 0.005
Standard deviation = 0.07
95% Confidence Interval, for a single determination = 0.2

8. Author

This method was prepared by K. K. Tutin and M. L. Foster, Tacoma R&D Laboratory, Georgia-Pacific Resins, Inc. (Principle written by R. R. Conner.)

9. References

9.1 GPAM 2221.2.
9.2 PR&C TM 2.035.
9.3 Project Report, Comparison of Free Formaldehyde Procedures, January 1990, K. K. Tutin.

APPENDIX C TO SUBPART NNN OF PART 63—METHOD FOR THE DETERMINATION OF PRODUCT DENSITY

1. Purpose

The purpose of this test is to determine the product density of cured blanket insulation.

The method is applicable to all cured board and blanket products.

2. Equipment

One square foot (12 in. by 12 in.) template, or templates that are multiples of one square foot, for use in cutting insulation samples.

3. Procedure

3.1 Obtain a sample at least 30 in. long across the machine width. Sample should be free of dirt or foreign matter.

3.2 Lay out the cutting pattern according to the plant's written procedure for the designated product.

3.2 Cut samples using one square foot (or multiples of one square foot) template.

3.3 Weigh product and obtain area weight (lb/ft^2).

3.4 Measure sample thickness.

3.5 Calculate the product density:

Density (lb/ft^3) = area weight (lb/ft^2)/thickness (ft)

Subpart OOO—National Emission Standards for Hazardous Air Pollutant Emissions: Manufacture of Amino/Phenolic Resins

SOURCE: 65 FR 3290, Jan. 20, 2000, unless otherwise noted.

§ 63.1400 Applicability and designation of affected sources.

(a) *Applicability*. The provisions of this subpart apply to the owner or operator of processes that produce amino/phenolic resins and that are located at a plant site that is a major source as defined in § 63.2.

(b) *Affected source*. The affected source is:

(1) The total of all amino/phenolic resin process units (APPU);

(2) The associated heat exchange systems;

(3) Equipment required by, or utilized as a method of compliance with, this subpart which may include control devices and recovery devices;

(4) Equipment that does not contain organic hazardous air pollutants (HAPs) and is located within an APPU that is part of an affected source;

(5) Vessels and equipment storing and/or handling material that contain no organic HAP and/or organic HAP as impurities only;

(6) Equipment that is intended to operate in organic HAP service for less than 300 hours during the calendar year;

(7) Each waste management unit; and

(8) Maintenance wastewater.

(c) *Existing affected source*. The affected source to which the existing source provisions of this subpart apply is defined in paragraph (b) of this section.

(d) *New affected source*. The affected source to which the new source provisions of this subpart apply is:

(1) Each affected source defined in paragraph (b) of this section that commences construction or reconstruction after December 14, 1998;

(2) Each additional group of one or more APPU and associated heat exchange systems that has the potential to emit 10 tons per year or more of any organic HAP or 25 tons per year or more of any combination of organic HAP that commences construction after December 14, 1998; or

(3) Each group of one or more process units and associated heat exchange systems that are converted to APPUs after December 14, 1998, that has the potential to emit 10 tons per year or more of any organic HAP or 25 tons per year or more of any combination of organic HAP.

(e) *APPUs without organic HAP*. An APPU that is part of an affected source, as defined in paragraph (c) or (d) of this section, but that does not use or manufacture any organic HAP, is not subject to any other provisions of this subpart and is not required to comply with the provisions of subpart A of this part. When requested by the Administrator, the owner or operator shall demonstrate that the APPU does not use or manufacture any organic HAP. Types of information that could document this determination include, but are not limited to, records of chemicals purchased for the process, analyses of process stream composition, engineering calculations, or process knowledge.

(f) *Exemption from equipment leak provisions*. Affected sources with actual annual production of amino/phenolic resin equal to or less than 800 megagrams per year (Mg/yr) for the 12-month period preceding December 14, 1998 are exempt from the equipment leak provisions specified in § 63.1410.

The owner or operator utilizing this exemption shall recheck the actual annual production of amino/phenolic resins for each 12-month period following December 14, 1998. The beginning of each 12-month period shall be the anniversary of December 14, 1998. If the actual annual production of amino/phenolic resins is greater than 800 Mg/yr for any 12-month period, the owner or operator shall comply with § 63.1410 for the life of the affected source or until the affected source is no longer subject to the provisions of this subpart.

(g) *Primary product determination and applicability*. For purposes of this paragraph, amino resins and phenolic resins shall be considered to be the same product and production time or production mass of amino and phenolic resins shall be combined for purposes of determining the primary product under this paragraph (g). If the owner or operator determines that a process unit is not an APPU under paragraphs (g)(1) through (4) of this section, the owner or operator shall, when requested by the Administrator, demonstrate that the process unit is not an APPU.

(1) *Applicability determinations for process units producing multiple products*. A process unit that produces more than one intended product at the same time is an APPU if amino/phenolic resin production accounts for the greatest percent of the annual design capacity on a mass basis. If a process unit has the same annual design capacity on a mass basis for two or more products, the process unit shall be an APPU if amino/phenolic resins are one of those products.

(2) *Flexible operations process unit determination based on operating time*. A flexible operations process unit is an APPU if amino/phenolic resins will be produced for the greatest operating time over the 5 years following December 14, 1998 at existing process units, or for the first year after the process unit begins production of any product for new process units.

(3) *Flexible operations process unit determination based on mass production basis*. A flexible operations process unit that will manufacture multiple products equally based on operating time is an APPU if amino/phenolic resins account for the greatest percentage of the expected production on a mass basis over the 5 years following December 14, 1998 at existing process units, or for the first year after the process unit begins production of any product for new process units.

(4) *Flexible operations process unit default determination*. If the owner or operator cannot determine whether or not amino/phenolic resins are the primary product of a flexible operations process unit in accordance with paragraphs (g)(2) and (3) of this section, the flexible operations process unit shall be designated as an APPU if amino/phenolic resins were produced for 5 percent or greater of the total operating time since December 14, 1998 for existing process units. The flexible operations process unit shall be designated as an APPU if the owner or operator anticipates that amino/phenolic resins will be manufactured in the flexible operations process unit at any time in the first year after the date the unit begins production of any product for new process units.

(5) *Annual applicability determination for non-APPUs that have produced amino/phenolic resins*. Once per year beginning December 14, 2003, the owner or operator of each flexible operations process unit that is not designated as an APPU, but that has produced amino/phenolic resins at any time in the preceding 5-year period or since the date that the unit began production of any product, whichever is shorter, shall perform an evaluation to determine whether the process unit has become an APPU. A flexible operations process unit has become an APPU if amino/phenolic resins were produced for the greatest operating time over the preceding 5-year period or since the date that the process unit began production of any product, whichever is shorter.

(6) *Applicability determination for non-APPUs that have not produced amino/phenolic resins*. The owner or operator that anticipates the production of amino/phenolic resins in a process unit that is not designated as an APPU, and in which no amino/phenolic resins have been produced in the previous 5-year period or since the date that the process unit began production of any product, whichever is shorter, shall determine if the process unit will become an

APPU. The owner or operator shall use the procedures in paragraphs (g)(1) through (4) of this section to determine if the process unit is designated as an APPU, with the following exception: for existing process units, production shall be projected for the 5 years following the date that the owner or operator anticipates initiating the production of amino/phenolic resins, instead of the 5 years following December 14, 1998.

(7) *Redetermination of applicability to APPU that are flexible operations process units.* Whenever changes in production occur that could reasonably be expected to cause a flexible operations process unit to no longer be an APPU (*i.e.*, amino/phenolic resins will no longer be the primary product according to the determination procedures in paragraphs (g)(2) through (4) of this section), the owner or operator shall reevaluate the status of the process unit as an APPU. A flexible operations process unit has ceased to be an APPU subject to this subpart if the following criteria are met:

(i) If amino/phenolic resins were not produced for the greatest operating time over the preceding 5-year period or since the date that the process unit began production of any product, whichever is shorter;

(ii) If the new primary product, which is not amino/phenolic resins, is subject to another subpart of this part; and

(iii) If the owner or operator has notified the Administrator of the pending change in status for the flexible operations process unit, as specified in § 63.1417(h)(4).

(8) *APPU terminating production of all amino/phenolic resins.* If an APPU terminates the production of all amino/phenolic resins and does not anticipate the production of any amino/phenolic resins in the future, the process unit is no longer an APPU and is not subject to this subpart after notification is made to the Administrator, as specified in § 63.1417(h)(4).

(h) *Storage vessel applicability determination.* The owner or operator of a storage vessel at a new affected source shall determine assignment to a process unit as follows:

(1) If a storage vessel is already subject to another subpart of part 63 on January 20, 2000, said storage vessel shall continue to be assigned to the process unit subject to the other subpart.

(2) If a storage vessel is dedicated to a single process unit, the storage vessel shall be assigned to that process unit.

(3) If a storage vessel is shared among process units, then the storage vessel shall be assigned to that process unit located on the same plant site as the storage vessel that has the greatest input into or output from the storage vessel (i.e., said process unit has the predominant use of the storage vessel).

(4) If predominant use cannot be determined for a storage vessel that is shared among process units, and if one or more of those process units is an APPU subject to this subpart, the storage vessel shall be assigned to any of the APPUs.

(5) [Reserved]

(6) If the predominant use of a storage vessel varies from year to year, then predominant use shall be determined based on the use as follows:

(i) For existing affected sources, use shall be determined based on the following:

(A) The year preceding January 20, 2000; or

(B) The expected use for the 5 years following January 20, 2000.

(ii) For new affected sources, use shall be determined based on the first 5 years after initial start-up.

(7) Where the storage vessel is located in a tank farm (including a marine tank farm), the assignment of the storage vessel shall be determined according to paragraphs (h)(7)(i) and (ii) of this section. Only those storage vessels where a portion or all of the input into or output from the storage vessel is hardpiped directly to one or more process units are covered by this paragraph.

(i) The storage vessel is assigned to a process unit if the product or raw material entering or leaving the process unit flows directly into (or from) the storage vessel in the tank farm without passing through any intervening storage vessel. An intervening storage

vessel means a storage vessel connected by hardpiping both to the process unit and to the storage vessel in the tank farm.

(ii) If there are two or more process units that meet the criteria of paragraph (h)(7)(i) of this section with respect to a storage vessel, the storage vessel shall be assigned to one of those process units according to the provisions of paragraphs (h)(3) through (6) of this section.

(8) If the storage vessel begins receiving material from (or sending material to) a process unit that was not included in the initial determination, or ceases to receive material from (or send material to) a process unit, the owner or operator shall reevaluate the applicability of this subpart to the storage vessel according to the procedures in paragraphs (h)(3) through (7) of this section.

(i) *Applicability of other subparts to this subpart.* Paragraphs (i)(1) through (5) describe the applicability of other subparts to this subpart.

(1) After the compliance dates specified in this section, a storage vessel that is assigned to an affected source subject to this subpart that is also subject to and complying with the provisions of 40 CFR part 60, subpart Kb, shall continue to comply with 40 CFR part 60, subpart Kb. After the compliance dates specified in this section, a storage vessel that is assigned to an affected source subject to this subpart that is also subject to the provisions of 40 CFR part 60, subpart Kb, but the owner or operator has not been required to apply controls as part of complying with 40 CFR part 60, subpart Kb, is required to comply only with the provisions of this subpart. After the compliance dates specified in this section, said storage vessel shall no longer be subject to 40 CFR part 60, subpart Kb.

(2) Affected sources subject to this subpart that are also subject to the provisions of subpart Q of this part shall comply with both subparts.

(3) After the compliance dates specified in this section, an affected source subject to this subpart that is also subject to the provisions of 40 CFR part 60, subpart VV, or the provisions of subpart H of this part, is required to comply only with the provisions of this subpart. After the compliance dates specified in this section, said source shall no longer be subject to 40 CFR part 60, subpart VV, or subpart H of this part, as appropriate.

(4) After the applicable compliance date specified in this subpart, if a heat exchange system subject to this subpart is also subject to a standard identified in paragraph (i)(4)(i) or (ii) of this section, compliance with the applicable provisions of the standard identified in paragraph (i)(4)(i) or (ii) of this section shall constitute compliance with the applicable provisions of this subpart with respect to that heat exchange system.

(i) Subpart F of this part.

(ii) A subpart of this part that requires compliance with § 63.104 (e.g., subpart U of this part).

(5) After the compliance dates specified in this subpart, if any combustion device, recovery device or recapture device subject to this subpart is also subject to monitoring, recordkeeping, and reporting requirements in 40 CFR part 264, subparts AA, BB, or CC, or is subject to monitoring and recordkeeping requirements in 40 CFR part 265, subparts AA, BB, or CC, and the owner or operator complies with the periodic reporting requirements under 40 CFR part 264, subparts AA, BB, or CC, that would apply to the device if the facility had final-permitted status, the owner or operator may elect to comply either with the monitoring, recordkeeping and reporting requirements of this subpart, or with the monitoring, recordkeeping and reporting requirements in 40 CFR parts 264 and/or 265, as described in this paragraph, which shall constitute compliance with the monitoring, recordkeeping and reporting requirements of this subpart. If the owner or operator elects to comply with the monitoring, recordkeeping, and reporting requirements in 40 CFR parts 264 and/or 265, the owner or operator shall report all information required by § 63.1417(f), Periodic Reports, as part of complying with the requirements of 40 CFR parts 264 and/or 265.

(j) *Applicability of General Provisions.* Table 1 of this subpart specifies the provisions of subpart A of this part that apply and do not apply to owners

and operators of affected sources subject to this subpart.

(k) *Applicability of this subpart during periods of start-up, shutdown, malfunction, or non-operation.* Paragraphs (k)(1) through (4) of this section shall be followed during periods of start-up, shutdown, malfunction, or non-operation of the affected source or any part thereof.

(1) The emission limitations set forth in this subpart and the emission limitations referred to in this subpart shall apply at all times except during periods of non-operation of the affected source (or specific portion thereof) resulting in cessation of the emissions to which this subpart applies. The emission limitations of this subpart and the emission limitations referred to in this subpart shall not apply during periods of start-up, shutdown, or malfunction. During periods of start-up, shutdown, or malfunction, the owner or operator shall follow the applicable provisions of the start-up, shutdown, and malfunction plan required by §63.6(e)(3). However, if a start-up, shutdown, malfunction, or period of non-operation of one portion of an affected source does not affect the ability of a particular emission point to comply with the emission limitations to which it is subject, then that emission point shall still be required to comply with the applicable emission limitations of this subpart during the start-up, shutdown, malfunction, or period of non-operation. For example, if there is an overpressure in the reactor area, a storage vessel that is part of the affected source would still be required to be controlled in accordance with §63.1404.

(2) The emission limitations set forth in 40 CFR part 63, subpart UU, as referred to in §63.1410, shall apply at all times except during periods of non-operation of the affected source (or specific portion thereof) in which the lines are drained and depressurized resulting in cessation of the emissions to which §63.1410 applies, or during periods of start-up, shutdown, malfuncton, or process unit shutdown. During periods of start-up, shutdown, malfunction, or process unit shutdown, the owner or operator shall follow the applicable provisions of the start-up, shutdown, and malfunction plan required by §63.6(e)(3).

(3) The owner or operator shall not shut down items of equipment that are required or utilized for compliance with this subpart during periods of start-up, shutdown, or malfunction; or during times when emissions are being routed to such items of equipment if the shutdown would contravene requirements of this subpart applicable to such items of equipment. This paragraph does not apply if the item of equipment is malfunctioning. This paragraph also does not apply if the owner or operator shuts down the compliance equipment (other than monitoring systems) to avoid damage due to a contemporaneous start-up, shutdown, or malfunction of the affected source or portion thereof. If the owner or operator has reason to believe that monitoring equipment would be damaged due to a contemporaneous start-up, shutdown, or malfunction of the affected source or portion thereof, the owner or operator shall provide documentation supporting such a claim in the Precompliance Report as provided in §63.1417(d)(9) or in a supplement to the Precompliance Report. Once approved by the Administrator in accordance with §63.1417(d)(9), the provision for ceasing to collect, during a start-up, shutdown, or malfunction, monitoring data that would otherwise be required by the provisions of this subpart shall be incorporated into the start-up, shutdown, malfunction plan for the affected source, as stated in paragraph (k) of this section.

(4) During start-ups, shutdowns, and malfunctions when the emission limitations of this subpart do not apply pursuant to paragraphs (k)(1) through (3) of this section, the owner or operator shall implement, to the extent reasonably available, measures to prevent or minimize excess emissions to the extent practical. For purposes of this paragraph, the term ''excess emissions'' means emissions in excess of those that would have occurred if there were no start-up, shutdown, or malfunction and the owner or operator complied with the relevant provisions of this subpart. The measures to be taken shall be identified in the applicable start-up, shutdown, and malfunction plan, and may include, but are not

limited to, air pollution control technologies, recovery technologies, work practices, pollution prevention, monitoring, and/or changes in the manner of operation of the affected source. Back-up control devices are not required, but may be used if available.

§ 63.1401 Compliance schedule.

(a) New affected sources that commence construction or reconstruction after December 14, 1998, shall be in compliance with this subpart upon initial start-up or January 20, 2000, whichever is later.

(b) Existing affected sources shall be in compliance with this subpart no later than 3 years after January 20, 2000.

(c) If an affected source using the exemption provided in § 63.1400(f) has an actual annual production of amino/phenolic resins exceeding 800 Mg/yr for any 12-month period, the owner or operator shall comply with the provisions of § 63.1410 for the affected source within 3 years. The starting point for the 3-year compliance time period shall be the end of the 12-month period in which actual annual production for amino/phenolic resins exceeds 800 Mg/yr.

(d) Pursuant to section 112(i)(3)(B) of the Clean Air Act, an owner or operator may request an extension allowing the existing affected source up to 1 additional year to comply with section 112(d) standards. For purposes of this subpart, a request for an extension shall be submitted to the permitting authority as part of the operating permit application or to the Administrator as a separate submittal or as part of the Precompliance Report.

(1) Requests for extensions shall be submitted no later than 120 days prior to the compliance dates specified in paragraphs (a) and (b) of this section and shall include the data described in § 63.6(i)(6)(i)(A), (B), and (D). The dates specified in § 63.6(i) for submittal of requests for extensions shall not apply to this subpart.

(2) An owner or operator may submit a compliance extension request less than 120 days prior to the compliance dates specified in paragraphs (a) and (b) of this section provided that the need for the compliance extension arose after that date, and the need arose due to circumstances beyond reasonable control of the owner or operator. This request shall include, in addition to the information specified in § 63.6(i)(6)(i)(A), (B), and (D), a statement of the reasons additional time is needed and the date when the owner or operator first learned of the circumstances necessitating a request for compliance extension.

(e) All terms in this subpart that define a period of time for completion of required tasks (*e.g.*, weekly, monthly, quarterly, annual), unless specified otherwise, refer to the standard calendar periods.

(1) Notwithstanding time periods specified in this subpart for completion of required tasks, such time periods may be changed by mutual agreement between the owner or operator and the Administrator, as specified in subpart A of this part (*e.g.*, a period could begin on the compliance date or another date, rather than on the first day of the standard calendar period). For each time period that is changed by agreement, the revised period shall remain in effect until it is changed. A new request is not necessary for each recurring period.

(2) Where the period specified for compliance is a standard calendar period, if the initial compliance date occurs after the beginning of the period, compliance shall be required according to the schedule specified in paragraph (e)(2)(i) or (ii) of this section, as appropriate:

(i) Compliance shall be required before the end of the standard calendar period within which the compliance deadline occurs, if there remain at least 3 days for tasks that must be performed weekly, at least 2 weeks for tasks that must be performed monthly, at least 1 month for tasks that must be performed each quarter, or at least 3 months for tasks that must be performed annually; or

(ii) In all other cases, compliance shall be required before the end of the first full standard calendar period after the period within which the initial compliance deadline occurs.

(3) In all instances where a provision of this subpart requires completion of a task during each of multiple successive

periods, an owner or operator may perform the required task at any time during the specified period, provided that the task is conducted at a reasonable interval after completion of the task during the previous period.

§ 63.1402 Definitions.

(a) The following terms used in this subpart shall have the meaning given them in §§ 63.2, 63.101, 63.111, and 63.161 as specified after each term:

Act (§ 63.2)
Administrator (§ 63.2)
Annual average concentration (§ 63.111)
Annual average flow rate (§ 63.111)
Automated monitoring and recording system (§ 63.111)
Boiler (§ 63.111)
Bottoms receiver (§ 63.161)
By compound (§ 63.111)
By-product (§ 63.101)
Car-seal (§ 63.111)
Closed-vent system (§ 63.111)
Combustion device (§ 63.111)
Commenced (§ 63.2)
Compliance date (§ 63.2)
Connector (§ 63.161)
Construction (§ 63.2)
Continuous monitoring system (§ 63.2)
Distillation unit (§ 63.111)
Duct work (§ 63.161)
Emission standard (§ 63.2)
EPA (§ 63.2)
External floating roof (§ 63.111)
First attempt at repair (§ 63.111)
Flame zone (§ 63.111)
Floating roof (§ 63.111)
Flow indicator (§ 63.111)
Fuel gas (§ 63.101)
Fuel gas system (§ 63.101)
Hard-piping (§ 63.111)
Hazardous air pollutant (§ 63.2)
Impurity (§ 63.101)
Inorganic hazardous air pollutant service (§ 63.161)
Incinerator (§ 63.111)
Instrumentation system (§ 63.161)
Internal floating roof (§ 63.111)
Lesser quantity (§ 63.2)
Major source (§ 63.2)
Open-ended valve or line (§ 63.161)
Operating permit (§ 63.101)
Organic monitoring device (§ 63.111)
Owner or operator (§ 63.2)
Performance evaluation (§ 63.2)
Performance test (§ 63.2)
Permitting authority (§ 63.2)
Plant site (§ 63.101)
Potential to emit (§ 63.2)
Primary fuel (§ 63.111)
Process heater (§ 63.111)
Process unit shutdown (§ 63.161)
Process wastewater (§ 63.111)
Reactor (§ 63.111)
Reconstruction (§ 63.2)
Routed to a process or route to a process (§ 63.161)
Run (§ 63.2)
Secondary fuel (§ 63.111)
Sensor (§ 63.161)
Specific gravity monitoring device (§ 63.111)
Start-up, shutdown, and malfunction plan (§ 63.101)
State (§ 63.2)
Surge control vessel (§ 63.161)
Temperature monitoring device (§ 63.111)
Test method (§ 63.2)
Total resource effectiveness (TRE) index value (§ 63.111)
Treatment process (§ 63.111)
Unit operation (§ 63.101)
Visible emission (§ 63.2)

(b) All other terms used in this subpart shall have the meaning given them in this section. If a term is defined in §§ 63.2, 63.101, 63.111, or 63.161 or defined in 40 CFR part 63, subparts SS, UU, or WW and in this section, it shall have the meaning given in this section for purposes of this subpart.

Aggregate batch vent stream means a process vent containing emissions from at least one reactor batch process vent and at least one additional reactor or non-reactor batch process vent where the emissions are ducted, hardpiped, or otherwise connected together for a continuous flow.

Amino resin means a thermoset resin produced through the reaction of formaldehyde, or a formaldehyde containing solution (e.g., aqueous formaldehyde), with compound(s) that contain the amino group; these compounds include melamine, urea, and urea derivatives. Formaldehyde substitutes are exclusively aldehydes.

Amino/phenolic resin means one or both of the following:

(1) Amino resin; or

(2) Phenolic resin.

Amino/phenolic resin. Process unit (APPU) means a collection of equipment assembled and connected by hardpiping or ductwork used to process raw materials and to manufacture an amino/phenolic resin as its primary product. This collection of equipment includes unit operations; process vents; storage vessels, as determined in § 63.1400(h); and the equipment that is subject to the equipment leak provisions as specified in § 63.1410. Utilities, lines and equipment not containing process fluids, and other non-process

lines, such as heating and cooling systems which do not combine their materials with those in the processes they serve, are not part of the amino/phenolic resin process unit. An amino/phenolic resin process unit consists of more than one unit operation.

Batch cycle means the operational step or steps, from start to finish, that occur as part of a batch unit operation.

Batch emission episode means a discrete emission venting episode associated with a single batch unit operation. Multiple batch emission episodes may occur from a single batch unit operation.

Batch mode means the discontinuous bulk movement of material through a unit operation. Mass, temperature, concentration, and other properties may vary with time. For a unit operation operated in a batch mode (i.e., batch unit operation), the addition of material and withdrawal of material do not typically occur simultaneously.

Batch process vent means a process vent from a batch unit operation within an affected source. Batch process vents are either reactor batch process vents or non-reactor batch process vents.

Batch unit operation means a unit operation operated in a batch mode.

Block means the time period that comprises a single batch cycle.

Combustion device burner means a device designed to mix and ignite fuel and air to provide a flame to heat and oxidize waste organic vapors in a combustion device.

Continuous mode means the continuous movement of material through a unit operation. Mass, temperature, concentration, and other properties typically approach steady-state conditions. For a unit operation operated in a continuous mode (*i.e.*, continuous unit operation), the simultaneous addition of raw material and withdrawal of product is typical.

Continuous process vent means a process vent from a continuous unit operation within an affected source. Process vents that are serving as control devices are not subject to additional control requirements.

Continuous record means documentation, either in hard copy or computer readable form, of data values measured at least once every 15 minutes and recorded at the frequency specified in § 63.1416(c) or (h).

Continuous recorder means a data recording device that either records an instantaneous data value at least once every 15 minutes or records 1 hour or more frequent block average values.

Continuous unit operation means a unit operation operated in a continuous mode.

Control device means any combustion device, recovery device, or recapture device. Such equipment includes, but is not limited to, absorbers, carbon adsorbers, condensers, incinerators, flares, boilers, and process heaters. For continuous process vents, recapture devices are considered control devices but recovery devices are not considered control devices. Condensers operating as process condensers are not considered control devices. For a condenser that sometimes operates as a process condenser to be considered a control device, it shall not be operating as a process condenser for a given batch emission episode, and it shall recycle of the recovered material within the process.

Control technology means any process modification or use of equipment that reduces organic HAP emissions. Examples include, but are not limited to, product reformulation to reduce solvent content and/or use, batch cycle time reduction to reduce the duration of emissions, reduction of nitrogen purge rate, and the lowering of process condenser coolant temperatures.

Controlled organic HAP emissions means the quantity of organic HAP discharged to the atmosphere from a control device.

Emission point means an individual continuous process vent, batch process vent, aggregate batch vent stream, storage vessel, equipment leak, or heat exchange system.

Equipment means , for the purposes of the provisions in § 63.1410, each pump, compressor, agitator, pressure relief device, sampling connection system, open-ended valve or line, valve, connector, and instrumentation system in organic HAP service; and any control devices or systems required by § 63.1410. For purposes of this subpart, surge control vessels and bottom receivers are

not equipment for purposes of regulating equipment leak emissions. Surge control vessels and bottoms receivers are regulated as non-reactor batch process vents for the purposes of this subpart.

Equipment leak means emissions of organic HAP from a pump, compressor, agitator, pressure relief device, sampling connection system, open-ended valve or line, valve, or instrumentation system that either contains or contacts a fluid (liquid or gas) that is at least 5 percent by weight of total organic HAP.

Existing process unit means any process unit that is not a new process unit.

Flexible operations process unit means a process unit that periodically manufactures different chemical products, polymers, or resins by alternating raw materials or operating conditions. These units are also referred to as campaign plants or blocked operations.

Heat exchange system means any cooling tower system or once-through cooling water system (e.g., river or pond water) designed and intended to operate to not allow contact between the cooling medium and process fluid or gases (*i.e.*, a noncontact system). A heat exchange system may include more than one heat exchanger and may include recirculating or once-through cooling systems.

Highest-HAP recipe for a product means the recipe of the product with the highest total mass of organic HAP charged to the reactor during the production of a single batch of product.

Initial start-up means the first time a new or reconstructed affected source begins production, or, for equipment added or changed, the first time the equipment is put into operation. Initial start-up does not include operation solely for testing equipment. Initial start-up does not include subsequent start-ups of an affected source or portion thereof following malfunctions or shutdowns, or following changes in product for flexible operation process units, or following recharging of equipment in batch operation. Further, for purposes of §§63.1401 and 63.1410, initial start-up does not include subsequent start-ups of affected sources or portions thereof following malfunctions or process unit shutdowns.

Inprocess recycling means a recycling operation in which recovered material is used by a unit operation within the same affected source. It is not necessary for recovered material to be used by the unit operation from which they were recovered.

Maintenance wastewater means wastewater generated by the draining of process fluid from components in the APPU into an individual drain system prior to or during maintenance activities. Maintenance wastewater can be generated during planned and unplanned shutdowns and during periods not associated with a shutdown. Examples of activities that can generate maintenance wastewaters include descaling of heat exchanger tubing bundles, cleaning of distillation column traps, draining of low legs and high point bleeds, draining of pumps into an individual drain system, and draining of portions of the APPU for repair. The generation of wastewater from the routine rinsing or washing of equipment in batch operation between batches is not maintenance wastewater for the purposes of this subpart.

Malfunction means any sudden, infrequent, and not reasonably preventable failure of air pollution control equipment or process equipment, or failure of a process to operate in a normal or usual manner, or opening of a safety device. Failures that are caused in part by poor maintenance or careless operation are not malfunctions.

Maximum representative operating conditions means, for purposes of testing or measurements required by §63.1413, those conditions which reflect the highest organic HAP emissions reasonably expected to be vented to the control device or emitted to the atmosphere. For affected sources that produce the same product(s) using multiple recipes, the production of the highest-HAP recipe is reflective of maximum representative operating conditions.

Maximum true vapor pressure means the equilibrium partial pressure exerted by the total organic HAP in the stored liquid at the temperature equal to the highest calendar-month average of the liquid storage temperature for

liquids stored above or below the ambient temperature, or at the local maximum monthly average temperature as reported by the National Weather Service for liquids stored at the ambient temperature, as determined:

(1) In accordance with methods described in American Petroleum Institute Publication 2517, Evaporative Loss From External Floating-Roof Tanks (incorporated by reference as specified in § 63.14); or

(2) As obtained from standard reference texts; or

(3) As determined by the American Society for Testing and Materials Method D2879–83 (incorporated by reference as specified in § 63.14); or

(4) Any other method approved by the Administrator.

Multicomponent system means, as used in conjunction with batch process vents, a stream whose liquid and/or vapor contains more than one compound.

Net heating value means the difference between the heat value of the recovered chemical stream and the minimum heat value required to ensure a stable flame in the combustion device. This difference must have a positive value when used in the context of ''recovering chemicals for fuel value'' (*e.g.*, in the definition of ''recovery device'' in this section).

New process unit means a process unit for which the construction or reconstruction commenced after December 14, 1998.

Non-reactor batch process vent means a batch process vent originating from a unit operation other than a reactor. Non-reactor batch process vents include, but are not limited to, batch process vents from filter presses, surge control vessels, bottoms receivers, weigh tanks, and distillation systems.

Non-solvent-based resin means an amino/phenolic resin manufactured without the use of a solvent as described in the definition of solvent-based resin.

On-site or *On site* means, with respect to records required to be maintained by this subpart or required by another subpart referenced by this subpart, records are stored at a location within a major source which encompasses the affected source. On-site includes, but is not limited to, storage at the affected source or APPU to which the records pertain, or storage in central files elsewhere at the major source.

Operating day means the period defined by the owner or operator in the Notification of Compliance Status required by § 63.1417(e). The operating day is the period for which daily average monitoring values and batch cycle daily average monitoring values are determined.

Organic hazardous air pollutant(s) (organic HAP) means one or more of the chemicals listed in Table 2 of this subpart or any other chemical which is:

(1) Knowingly produced or introduced into the manufacturing process other than as an impurity; and

(2) Listed in Table 2 of subpart F of this part.

Phenolic resin means a thermoset resin that is a condensation product of formaldehyde and phenol, or a formaldehyde substitute and/or a phenol substitute. Substitutes for formaldehyde are exclusively aldehydes and include acetaldehyde or furfuraldehyde. Substitutes for phenol include other phenolic starting compounds such as cresols, xylenols, p-tert-butylphenol, p-phenylphenol, nonylphenol, and resorcinols.

Process condenser means a condenser functioning so as to recover material as an integral part of a unit operation(s). A process condenser shall support a vapor-to-liquid phase change for periods of equipment operation that are at or above the boiling or bubble point of substance(s) at the liquid surface. Examples of process condensers include distillation condensers, reflux condensers, and condensers used in stripping or flashing operations. In a series of condensers, all condensers up to and including the first condenser with an exit gas temperature below the boiling or bubble point of the substance(s) at the liquid surface are considered to be process condensers. All condensers in line prior to a vacuum source are considered process condensers when the vacuum source is being operated. A condenser may be a process condenser for some batch emission episodes and, when meeting certain conditions, may be a control device for other batch emission episodes.

Process unit means a collection of equipment assembled and connected by hardpiping or ductwork used to process raw materials and to manufacture a product.

Process vent means a gaseous emission stream from a unit operation where the gaseous emission stream is discharged to the atmosphere either directly or after passing through one or more control, recovery, or recapture devices. Unit operations that may have process vents are condensers, distillation units, reactors, or other unit operations within the APPU. Emission streams that are undiluted and uncontrolled containing less than 50 parts per million volume (ppmv) organic HAP, as determined through process knowledge that no organic HAP are present in the emission stream or using an engineering assessment as discussed in §63.1414(d)(6); test data using the test methods specified in §63.1414(a); or any other test method that has been validated according to the procedures in Method 301 of appendix A of this part are not considered process vents. Process vents exclude relief valve discharges, gaseous streams routed to a fuel gas system(s), and leaks from equipment regulated under §63.1410. Process vents that are serving as control devices are not subject to additional control requirements.

Product means a resin, produced using the same monomers and varying in additives (e.g., initiators, terminators, etc.), catalysts, or in the relative proportions of monomers, that is manufactured by a process unit. With respect to resins, more than one recipe may be used to produce the same product. Product also means a chemical that is not a resin that is manufactured by a process unit. By-products, isolated intermediates, impurities, wastes, and trace contaminants are not considered products.

Reactor batch process vent means a batch process vent originating from a reactor.

Recapture device means an individual unit of equipment capable of and used for the purpose of recovering chemicals, but not normally for use, reuse, or sale. For example, a recapture device may recover chemicals primarily for disposal. Recapture devices include, but are not limited to, absorbers, carbon adsorbers, and condensers.

Recipe means a specific composition from among the range of possible compositions that may occur within a product, as defined in this section. A recipe is determined by the proportions of monomers and, if present, other reactants and additives that are used to make the recipe. For example, a methylated amino resin and a nonmethylated amino resin are both different recipes of the same product, amino resin.

Recovery device means an individual unit of equipment capable of and normally used for the purpose of recovering chemicals for use, reuse, fuel value (i.e., net heating value); or for sale for use, reuse, or fuel value (i.e., net heating value). Examples of equipment that may be recovery devices include absorbers, carbon adsorbers, condensers, oil-water separators or organic-water separators, or organic removal devices such as decanters, strippers, or thin-film evaporation units. For the purposes of the monitoring, recordkeeping, or reporting requirements of this subpart, recapture devices are considered recovery devices.

Safety device means a closure device such as a pressure relief valve, frangible disc, fusible plug, or any other type of device which functions exclusively to prevent physical damage or permanent deformation to a unit or its air emission control equipment by venting gases or vapors directly to the atmosphere during unsafe conditions resulting from an unplanned, accidental, or emergency event. For the purposes of this subpart, a safety device is not used for routine venting of gases or vapors from the vapor headspace underneath a cover such as during filling of the unit or to adjust the pressure in this vapor headspace in response to normal daily diurnal ambient temperature fluctuations. A safety device is designed to remain in a closed position during normal operations and open only when the internal pressure, or another relevant parameter, exceeds the device threshold setting applicable to the air emission control equipment as determined by the owner or operator

based on manufacturer recommendations, applicable regulations, fire protection and prevention codes, standard engineering codes and practices, or other requirements for the safe handling of flammable, combustible, explosive, reactive, or hazardous materials.

Shutdown means for purposes including, but not limited to, periodic maintenance, replacement of equipment, or repair, the cessation of operation of an affected source, an APPU(s) within an affected source, or equipment required or used to comply with this subpart, or the emptying or degassing of a storage vessel. For purposes of the batch process vent provisions in §§ 63.1406 through 63.1408, the cessation of equipment in batch operations is not a shutdown, unless the equipment undergoes maintenance, is replaced, or is repaired.

Solvent-based resin means an amino/phenolic resin that consumes a solvent (*i.e.*, methanol, xylene) as a reactant in the resin producing reaction. The use of a solvent as a carrier (i.e., adding methanol to the product/water solution after the reaction is complete) does not meet this definition.

Start-up means the setting into operation of an affected source, an APPU(s) within an affected source, a unit operation within an affected source, or equipment required or used to comply with this subpart, or a storage vessel after emptying and degassing. For both continuous and batch unit operations, start-up includes initial start-up and operation solely for testing equipment. For both continuous and batch unit operations, start-up does not include the recharging of equipment in batch operation. For continuous unit operations, start-up includes transitional conditions due to changes in product for flexible operation process units. For batch unit operations, start-up does not include transitional conditions due to changes in product for flexible operation process units.

Steady-state conditions means that all variables (temperatures, pressures, volumes, flow rates, etc.) in a process do not vary significantly with time; minor fluctuations about constant mean values may occur.

Storage vessel means a tank or other vessel that is used to store liquids that contain one or more organic HAP. Storage vessels do not include:

(1) Vessels permanently attached to motor vehicles such as trucks, railcars, barges, or ships;

(2) Pressure vessels designed to operate in excess of 204.9 kilopascals and without emissions to the atmosphere;

(3) Vessels with capacities smaller than 38 cubic meters;

(4) Vessels and equipment storing and/or handling material that contains no organic HAP and/or organic HAP as impurities only;

(5) Wastewater storage tanks;

(6) Surge control vessels or bottoms receivers; and

(7) Vessels and equipment storing and/or handling amino/phenolic resin.

Supplemental combustion air means the air that is added to a vent stream after the vent stream leaves the unit operation. Air that is part of the vent stream as a result of the nature of the unit operation is not considered supplemental combustion air. Air required to operate combustion device burner(s) is not considered supplemental combustion air.

Uncontrolled organic HAP emissions means the organic HAP emitted from a unit operation prior to introduction of the emission stream into a control device. Uncontrolled HAP emissions are determined after any condenser that is operating as a process condenser. If an emission stream is not routed to a control device, uncontrolled organic HAP emissions are those organic HAP emissions released to the atmosphere.

Vent stream, as used in reference to batch process vents, aggregate batch vent streams, continuous process vents, and storage vessels, means the emissions from that emission point.

Waste management unit means the equipment, structure(s), and/or device(s) used to convey, store, treat, or dispose of wastewater streams or residuals. Examples of waste management units include: wastewater tanks, surface impoundments, individual drain systems, and biological wastewater treatment units. Examples of

equipment that may be waste management units include containers, air flotation units, oil-water separators or organic-water separators, or organic removal devices such as decanters, strippers, or thin-film evaporation units. If such equipment is used for recovery, then it is part of an APPU and is not a waste management unit.

Wastewater is either a process wastewater or maintenance wastewater and means water that:

(1) Contains either:

(i) An annual average concentration of organic HAP, as indicated on Table 2 of this subpart, of at least 5 parts per million by weight and has an annual average flow rate of 0.02 liter per minute or greater; or

(ii) An annual average concentration of organic HAP, as indicated on Table 2 of this subpart, of at least 10,000 parts per million by weight at any flow rate.

(2) Is discarded from an APPU that is part of an affected source.

(3) Does not include:

(i) Stormwater from segregated sewers;

(ii) Water from fire-fighting and deluge systems in segregated sewers;

(iii) Spills;

(iv) Water from safety showers;

(v) Water from testing of deluge systems; and

(vi) Water from testing of fire-fighting systems.

Wastewater stream means a stream that contains wastewater as defined in this section.

§ 63.1403 Emission standards.

(a) *Provisions of this subpart*. Except as allowed under paragraph (b) of this section, the owner or operator of an affected source shall comply with the provisions of §§ 63.1404 through 63.1410, as appropriate. When emissions are vented to a control device or control technology as part of complying with this subpart, emissions shall be vented through a closed vent system meeting the requirements of 40 CFR part 63, subpart SS (national emission standards for closed vent systems, control devices, recovery devices).

(b) *Combined emission streams*. When emissions of different kinds (*e.g.*, emissions from continuous process vents, storage vessels, etc.) are combined at a new affected source, and at least one of the emission streams would be required by this subpart to apply controls in the absence of combination with other emission streams, the owner or operator shall comply with the requirements of paragraph (b)(1) or (2) of this section, as appropriate.

(1) For any combined vent stream that includes one or more aggregate batch vent streams, comply with the provisions for aggregate batch vent streams.

(2) For any combined vent stream that does not include one or more aggregate batch vent streams:

(i) Reactor batch process vents and non-reactor batch process vents shall comply with the provisions for reactor batch process vents and non-reactor batch process vents, as appropriate.

(ii) The remaining emissions (*i.e.*, storage vessel and/or continuous process vent emissions) included in the combined vent stream shall comply the provisions for storage vessels when storage vessel emissions are included and shall comply with the provisions for continuous process vents in the absence of storage vessel emissions (*i.e.*, when only continuous process vents are included).

(c) *Compliance for flexible operations process units*. With the exceptions specified in paragraphs (c)(1) and (2) of this section, owners or operators of APPUs that are flexible operations process units shall comply with the provisions of this subpart at all times, regardless of the product being manufactured. Once it has been determined that an emission point requires control during manufacture of amino/phenolic resins, that emission point shall be controlled at all times regardless of the product being manufactured.

(1) When a flexible operations process unit is manufacturing a product in which no organic HAP are used or manufactured, the owner or operator is not required to comply with the provisions of this subpart or with the provisions of subpart A of this part during manufacture of that product. When requested by the Administrator, the owner or operator shall demonstrate that no organic HAP are used or manufactured.

(2) When a flexible operations process unit is manufacturing a product subject to subpart GGG of this part, the owner or operator is not required to comply with the provisions of this subpart during manufacture of that product (*i.e.*, a pharmaceutical).

§ 63.1404 Storage vessel provisions.

(a) *Emission standards.* For each storage vessel located at a new affected source that has a capacity of 50,000 gallons or greater and vapor pressure of 2.45 pounds per square inch absolute (psia) or greater or has a capacity of 90,000 gallons or greater and vapor pressure of 0.15 psia or greater, the owner or operator shall comply with either paragraph (a) (1) or (2) of this section. As an alternative to complying with paragraph (a) of this section, an owner or operator may comply with paragraph (b) of this section.

(1) Reduce emissions of total organic HAP by 95 weight-percent. Control shall be achieved by venting emissions through a closed vent system to any combination of control devices meeting the requirements of 40 CFR part 63, subpart SS (national emission standards for closed vent systems, control devices, recovery devices). When complying with the requirements of 40 CFR part 63, subpart SS, the following apply for purposes of this subpart:

(i) Design evaluations are allowed for control devices that control emission points with total emissions less than 10 tons of organic HAP per year before control (i.e., small control devices).

(ii) When 40 CFR part 63, subpart SS refers to specific test methods for the measurement of organic HAP concentration, the test methods presented in § 63.1414(a) shall be used.

(iii) The option to measure TOC instead of organic HAP, as a basis for demonstrating compliance, is not allowed.

(iv) Excused excursions are not allowed.

(v) The provisions in § 63.1403(b), rather than the provisions in § 63.982(f), are to be followed for combined vent streams.

(vi) When a scrubber is used as a control device, the owner or operator shall follow the guidance provided in this subpart for design evaluations or performance tests, as appropriate, and for monitoring, recordkeeping, and reporting.

(vii) When there are conflicts between the due dates for reports presented in 40 CFR part 63, subpart SS and this subpart, reports shall be submitted according to the due dates presented in this subpart.

(viii) When there are conflicts between the recordkeeping and reporting requirements presented in 40 CFR part 63, subpart SS and this subpart, the owner or operator shall either follow both sets of requirements (*i.e.*, follow the requirements in 40 CFR part 63, subpart SS for emission points covered by 40 CFR part 63, subpart SS and follow the requirements of this subpart for emission points covered by this subpart) or shall follow the set of requirements they prefer. If an owner or operator chooses to follow just one set of requirements, the owner or operator shall identify which set of requirements are being followed and which set of requirements are being disregarded in the appropriate report.

(2) Comply with the requirements of 40 CFR part 63, subpart WW (national emission standards for storage vessels (control level 2)). When complying with the requirements of 40 CFR part 63, subpart WW, the following apply for purposes of this subpart:

(i) When there are conflicts between the due dates for reports presented in 40 CFR part 63, subpart WW and this subpart, reports shall be submitted according to the due dates presented in this subpart.

(ii) When there are conflicts between the recordkeeping and reporting requirements presented in 40 CFR part 63, subpart WW and this subpart, the owner or operator shall either follow both sets of requirements (*i.e.*, follow the requirements in 40 CFR part 63, subpart WW for emission points covered by 40 CFR part 63, subpart WW and follow the requirements of this subpart for emission points covered by this subpart) or shall follow the set of requirements they prefer. If an owner or operator chooses to follow just one set of requirements, the owner or operator shall identify which set of requirements are being followed and which set

of requirements are being disregarded in the appropriate report.

(b) *Alternative standard.* Vent all organic HAP emissions from a storage vessel meeting either of the capacity and vapor pressure criteria specified in paragraph (a) of this section to a combustion control device achieving an outlet organic HAP concentration of 20 ppmv or less or to a non-combustion control device achieving an outlet organic HAP concentration of 50 ppmv or less. Any storage vessels that are not vented to a control device meeting these conditions shall be controlled in accordance with the provisions of paragraph (a)(1) or (2) of this section.

§ 63.1405 Continuous process vent provisions.

(a) *Emission standards.* For each continuous process vent located at a new affected source with a Total Resource Effectiveness (TRE) index value, as determined following the procedures specified in § 63.1412(j), less than or equal to 1.2, the owner or operator shall comply with either paragraph (a)(1) or (2) of this section. As an alternative to complying with paragraph (a) of this section, an owner or operator may comply with paragraph (b) of this section.

(1) Vent all emissions of organic HAP to a flare.

(2) Reduce emissions of total organic HAP by 85 weight-percent or to a concentration of 20 ppmv when using a combustion control device or to a concentration of 50 ppmv when using a non-combustion control device, whichever is less stringent. Control shall be achieved by venting emissions through a closed vent system to any combination of control devices meeting the requirements of 40 CFR part 63, subpart SS (national emission standards for closed vent systems, control devices, recovery devices). When complying with the requirements of 40 CFR part 63, subpart SS, the following apply for purposes of this subpart:

(i) Design evaluations are allowed for control devices that control emission points with total emissions less than 10 tons of organic HAP per year before control (*i.e.*, small control devices).

(ii) When 40 CFR part 63, subpart SS refers to specific test methods for the measurement of organic HAP concentration, the test methods presented in § 63.1414(a) shall be used.

(iii) The option to measure TOC instead of organic HAP, as a basis for demonstrating compliance, is not allowed.

(iv) Excused excursions are not allowed.

(v) The provisions in § 63.1403(b), rather than the provisions in § 63.982(f), are to be followed for combined vent streams.

(vi) When a scrubber is used as a control device, the owner or operator shall follow the guidance provided in this subpart for design evaluations or performance tests, as appropriate, and for monitoring, recordkeeping, and reporting.

(vii) When there are conflicts between the due dates for reports presented in 40 CFR part 63, subpart SS and this subpart, reports shall be submitted according to the due dates presented in this subpart.

(viii) When there are conflicts between the recordkeeping and reporting requirements presented in 40 CFR part 63, subpart SS and this subpart, the owner or operator shall either follow both sets of requirements (*i.e.*, follow the requirements in 40 CFR part 63, subpart SS for emission points covered by 40 CFR part 63, subpart SS and follow the requirements of this subpart for emission points covered by this subpart) or shall follow the set of requirements they prefer. If an owner or operator chooses to follow just one set of requirements, the owner or operator shall identify which set of requirements are being followed and which set of requirements are being disregarded in the appropriate report.

(b) *Alternative standard.* Vent all organic HAP emissions from a continuous process vent meeting the TRE value specified in paragraph (a) of this section to a combustion control device achieving an outlet organic HAP concentration of 20 ppmv or less or to a non-combustion control device achieving an outlet organic HAP concentration of 50 ppmv or less. Any continuous process vents that are not vented to a control device meeting these conditions shall be controlled in accordance

with the provisions of paragraphs (a)(1) or (2) of this section.

§ 63.1406 Reactor batch process vent provisions.

(a) *Emission standards.* Owners or operators of reactor batch process vents located at new or existing affected sources shall comply with paragraph (a)(1) or (2) of this section, as appropriate. As an alternative to complying with paragraph (a) of this section, an owner or operator may comply with paragraph (b) of this section.

(1) The owner or operator of a reactor batch process vent located at a new affected source shall control organic HAP emissions by complying with either paragraph (a)(1)(i), (ii), or (iii) of this section.

(i) Vent all emissions of organic HAP to a flare.

(ii) Reduce organic HAP emissions for the batch cycle by 95 weight percent using a control device or control technology.

(iii) Reduce organic HAP emissions from the collection of all reactor batch process vents within the affected source, as a whole, to 0.0045 kilogram of organic HAP per megagram of product or less for solvent-based resin production, or to 0.0004 kilogram of organic HAP per megagram of product or less for non-solvent-based resin production.

(2) The owner or operator of a reactor batch process vent located at an existing affected source shall control organic HAP emissions by complying with either paragraph (a)(2)(i), (ii), or (iii) of this section.

(i) Vent all emissions of organic HAP to a flare.

(ii) Reduce organic HAP emissions for the batch cycle by 83 weight percent using a control device or control technology.

(iii) Reduce organic HAP emissions from the collection of all reactor batch process vents within the affected source, as a whole, to 0.0567 kilogram of organic HAP per megagram of product or less for solvent-based resin production, or to 0.0057 kilogram of organic HAP per megagram of product or less for non-solvent-based resin production.

(b) *Alternative standard.* Vent all organic HAP emissions from a reactor batch process vent to a combustion control device achieving an outlet organic HAP concentration of 20 ppmv or less or to a non-combustion control device achieving an outlet organic HAP concentration of 50 ppmv or less. Any reactor batch process vents that are not vented to a control device meeting these conditions shall be controlled in accordance with the provisions of paragraph (a)(1)(ii), or paragraph (a)(2)(ii) of this section.

(c) *Use of boiler or process heater.* If a boiler or process heater is used to comply with the requirements of paragraph (a)(1)(i) or (ii), or paragraph (a)(2)(i) or (ii) of this section, the reactor batch process vent shall be introduced into the flame zone of such a device.

§ 63.1407 Non-reactor batch process vent provisions.

(a) *Emission standards.* (1) Owners or operators of non-reactor batch process vents located at new or existing affected sources with 0.25 tons per year (0.23 megagrams per year) of uncontrolled organic HAP emissions or greater from the collection of non-reactor batch process vents within the affected source shall comply with the requirements in paragraph (a)(2) or (3) of this section, as appropriate. As an alternative to complying with paragraph (a)(2) or (3) of this section, an owner or operator may comply with paragraph (b) of this section. Owners or operators shall determine uncontrolled organic HAP emissions from the collection of non-reactor batch process vents within the affected source as specified in paragraph (d) of this section. If the owner or operator finds that uncontrolled organic HAP emissions from the collection of non-reactor batch process vents within the affected source are less than 0.25 tons per year (0.23 megagrams per year), non-reactor batch process vents are not subject to the control requirements of this section. Further, the owner or operator shall, when requested by the Administrator, demonstrate that organic HAP emissions for the collection of non-reactor batch process vents within the affected source are less than 0.25 tons per year (0.23 megagrams per year).

(2) The owner or operator of a non-reactor batch process vent located at a new affected source shall:

(i) Vent all emissions of organic HAP to a flare; or

(ii) For the collection of non-reactor batch process vents within the affected source, reduce organic HAP emissions for the batch cycle by 76 weight percent using a control device or control technology.

(3) The owner or operator of a non-reactor batch process vent located at an existing affected source shall:

(i) Vent all emissions of organic HAP to a flare; or

(ii) For the collection of non-reactor batch process vents within the affected source, reduce organic HAP emissions for the batch cycle by 62 weight percent using a control device or control technology.

(b) *Alternative standard.* Comply with either paragraph (b)(1) or (2) of this section.

(1) *Control device outlet concentration.* Vent all organic HAP emissions from a non-reactor batch process vent to a combustion control device achieving an outlet organic HAP concentration of 20 ppmv or less or to a non-combustion control device achieving an outlet organic HAP concentration or 50 ppmv or less. Any reactor batch process vents that are not vented to a control device meeting these conditions shall be controlled in accordance with the provisions of paragraph (a)(2) or (3) of this section.

(2) *Mass emission limit.* Include the emissions from all non-reactor batch process vents in the compliance demonstration required for reactor batch process vents complying with the mass emission limits specified in § 63.1406(a)(1)(iii) and (a)(2)(iii), as appropriate. This compliance option may only be used when the owner or operator has elected to comply with the mass emission limit for reactor batch process vents.

(c) *Use of boiler or process heater.* If a boiler or process heater is used to comply with paragraph (a)(2)(ii) or (a)(3)(ii) of this section, the reactor batch process vent shall be introduced into the flame zone of such a device.

(d) *Determining uncontrolled organic HAP emissions.* Owners or operators shall determine uncontrolled organic HAP emissions from the collection of non-reactor batch process vents within the affected source based on engineering assessment as described in § 63.1414(d)(6).

§ 63.1408 Aggregate batch vent stream provisions.

(a) *Emission standards.* Owners or operators of aggregate batch vent streams at a new or existing affected source shall comply with either paragraph (a)(1) or (2) of this section, as appropriate. As an alternative to complying with paragraph (a)(1) or (2) of this section, an owner or operator may comply with paragraph (b) of this section.

(1) The owner or operator of an aggregate batch vent stream located at a new affected source shall:

(i) Vent all emissions of organic HAP to a flare; or

(ii) Reduce organic HAP emissions by 95 weight percent or to a concentration of 20 ppmv when using a combustion control device or to a concentration of 50 ppmv when using a non-combustion control device, whichever is less stringent, on a continuous basis.

(2) The owner or operator of an aggregate batch vent stream located at an existing affected source shall:

(i) Vent all emissions of organic HAP to a flare; or

(ii) Reduce organic HAP emissions by 83 weight percent or to a concentration of 20 ppmv when using a combustion control device or to a concentration of 50 ppmv when using a non-combustion control device, whichever is less stringent, on a continuous basis.

(b) *Alternative standard.* Comply with either paragraph (b)(1) or (2) of this section.

(1) *Control device outlet concentration.* Vent all organic HAP emissions from an aggregate batch vent stream to a combustion control device achieving an outlet organic HAP concentration of 20 ppmv or less or to a non-combustion control device achieving an outlet organic HAP concentration of 50 ppmv or less. Any aggregate batch vent streams that are not vented to a control device meeting these conditions shall be controlled in accordance with

the provisions of paragraphs (a)(1) or (a)(2) of this section.

(2) *Mass emission limit.* Include the emissions from all aggregate batch vent streams in the compliance demonstration required for reactor batch process vents complying with the mass emission limits specified in § 63.1406(a)(1)(iii) and (a)(2)(iii), as appropriate. This compliance option may only be used when the owner or operator has elected to comply with the mass emission limit for reactor batch process vents.

§ 63.1409 Heat exchange system provisions.

(a) Unless one or more of the conditions specified in paragraphs (a)(1) through (6) of this section are met, owners and operators of sources subject to this subpart shall monitor each heat exchange system used to cool process equipment in an affected source, according to the provisions in either paragraph (b) or (c) of this section. Whenever a leak is detected, the owner or operator shall comply with the requirements in paragraph (d) of this section.

(1) The heat exchange system is operated with the minimum pressure on the cooling water side at least 35 kilopascals greater than the maximum pressure on the process side.

(2) There is an intervening cooling fluid, containing less than 5 percent by weight of total HAP listed in column A of Table 2 of this subpart, between the process and the cooling water. This intervening fluid serves to isolate the cooling water from the process fluid, and the intervening fluid is not sent through a cooling tower or discharged. For purposes of this section, discharge does not include emptying for maintenance purposes.

(3) The once-through heat exchange system is subject to a National Pollution Discharge Elimination System (NPDES) permit with an allowable discharge limit of 1 part per million or less above influent concentration or 10 percent or less above influent concentration, whichever is greater.

(4) The once-through heat exchange system is subject to an NPDES permit that:

(i) Requires monitoring of a parameter(s) or condition(s) to detect a leak of process fluids into cooling water;

(ii) Specifies or includes the normal range of the parameter or condition;

(iii) Requires monitoring for the parameters selected as leak indicators no less frequently than monthly for the first 6 months and quarterly thereafter; and

(iv) Requires the owner or operator to report and correct leaks to the cooling water when the parameter or condition exceeds the normal range.

(5) The recirculating heat exchange system is used to cool process fluids that contain less than 5 percent by weight of total HAP listed in column A of Table 2 of this subpart.

(6) The once-through heat exchange system is used to cool process fluids that contain less than 5 percent by weight of total HAP listed in column B of Table 2 of this subpart.

(b) The owner or operator who elects to comply with the requirements of paragraph (a) of this section by monitoring the cooling water for the presence of one or more organic HAP or other representative substances whose presence in cooling water indicate a leak shall comply with the requirements specified in paragraphs (b)(1) through (6) of this section. The cooling water shall be monitored for total HAP, total volatile organic compounds, total organic carbon, one or more speciated HAP compounds, or other representative substances that would indicate the presence of a leak in the heat exchange system.

(1) The cooling water shall be monitored monthly for the first 6 months and quarterly thereafter to detect leaks.

(2)(i) For recirculating heat exchange systems (cooling tower systems), the monitoring of speciated HAP or total HAP refers to the HAP listed in column A of Table 2 of this subpart.

(ii) For once-through heat exchange systems, the monitoring of speciated HAP or total HAP refers to the HAP listed in column B of Table 2 of this subpart.

(3) The concentration of the monitored substance(s) in the cooling water shall be determined using any EPA-approved method listed in part 136 of this

chapter, as long as the method is sensitive to concentrations as low as 10 parts per million and the same method is used for both entrance and exit samples. Alternative methods may be used upon approval by the Administrator.

(4) The samples shall be collected either at the entrance and exit of each heat exchange system or at locations where the cooling water enters and exits each heat exchanger or any combination of heat exchangers.

(i) For samples taken at the entrance and exit of recirculating heat exchange systems, the entrance is the point at which the cooling water leaves the cooling tower prior to being returned to the process equipment, and the exit is the point at which the cooling water is introduced to the cooling tower after being used to cool the process fluid.

(ii) For samples taken at the entrance and exit of once-through heat exchange systems, the entrance is the point at which the cooling water enters, and the exit is the point at which the cooling water exits the plant site or chemical manufacturing process units.

(iii) For samples taken at the entrance and exit of each heat exchanger or any combination of heat exchangers, the entrance is the point at which the cooling water enters the individual heat exchanger or group of heat exchangers, and the exit is the point at which the cooling water exits the heat exchanger or group of heat exchangers.

(5) A minimum of three sets of samples shall be taken at each entrance and exit as defined in paragraph (b)(4) of this section. The average entrance and exit concentrations shall then be calculated. The concentration shall be corrected for the addition of any make-up water or for any evaporative losses, as applicable.

(6) A leak is detected if the exit mean concentration is found to be greater than the entrance mean concentration using a one-sided statistical procedure at the 0.05 level of significance, and the amount by which it is greater is at least 1 part per million or 10 percent of the entrance mean, whichever is greater.

(c) The owner or operator who elects to comply with the requirement of paragraph (a) of this section by monitoring using a surrogate indicator of heat exchange system leaks shall comply with the requirements specified in paragraphs (c)(1) through (3) of this section. Surrogate indicators that could be used to develop an acceptable monitoring program are ion specific electrode monitoring, pH, conductivity or other representative indicators.

(1) The owner or operator shall prepare and implement a monitoring plan that documents the procedures that will be used to detect leaks of process fluids into cooling water. The plan shall require monitoring of one or more surrogate indicators or monitoring of one or more process parameters or other conditions that indicate a leak. Monitoring that is already being conducted for other purposes may be used to satisfy the requirements of this section. The plan shall include the information specified in paragraphs (c)(1)(i) and (ii) of this section.

(i) A description of the parameter or condition to be monitored and an explanation of how the selected parameter or condition will reliably indicate the presence of a leak.

(ii) The parameter level(s) or conditions(s) that constitute a leak. This shall be documented by data or calculations showing that the selected levels or conditions will reliably identify leaks. The monitoring must be sufficiently sensitive to determine the range of parameter levels or conditions when the system is not leaking. When the selected parameter level or condition is outside that range, a leak is indicated.

(iii) The monitoring frequency which shall be no less frequent than monthly for the first 6 months and quarterly thereafter to detect leaks.

(iv) The records that will be maintained to document compliance with the requirements of this section.

(2) If a substantial leak is identified by methods other than those described in the monitoring plan and the method(s) specified in the plan could not detect the leak, the owner or operator shall revise the plan and document the basis for the changes. The owner or operator shall complete the revisions to the plan no later than 180 days after discovery of the leak.

(3) The owner or operator shall maintain, at all times, the monitoring plan that is currently in use. The current plan shall be maintained on-site, or shall be accessible from a central location by computer or other means that provides access within 2 hours after a request. If the monitoring plan is superseded, the owner or operator shall retain the most recent superseded plan at least until 5 years from the date of its creation. The superseded plan shall be retained on-site (or accessible from a central location by computer or other means that provides access within 2 hours after a request) for at least 6 months after its creation.

(d) If a leak is detected according to the criteria of paragraph (b) or (c) of this section, the owner or operator shall comply with the requirements in paragraphs (d)(1) and (2) of this section, except as provided in paragraph (e) of this section.

(1) The leak shall be repaired as soon as practical but not later than 45 calendar days after the owner or operator receives results of monitoring tests indicating a leak. The leak shall be repaired unless the owner or operator demonstrates that the results are due to a condition other than a leak.

(2) Once the leak has been repaired, the owner or operator shall confirm that the heat exchange system has been repaired within 7 calendar days of the repair or startup, whichever is later.

(e) Delay of repair of heat exchange systems for which leaks have been detected is allowed if the equipment is isolated from the process. Delay of repair is also allowed if repair is technically infeasible without a shutdown and any one of the conditions in paragraph (e)(1) or (2) of this section are met. All time periods in paragraphs (e)(1) and (2) of this section shall be determined from the date when the owner or operator determines that delay of repair is necessary.

(1) If a shutdown is expected within the next 2 months, a special shutdown before that planned shutdown is not required.

(2) If a shutdown is not expected within the next 2 months, the owner or operator may delay repair as provided in paragraph (e)(2)(i) or (ii) of this section. Documentation of a decision to delay repair shall state the reasons repair was delayed and shall specify a schedule for completing the repair as soon as practical.

(i) If a shutdown for repair would cause greater emissions than the potential emissions from delaying repair, the owner or operator may delay repair until the next shutdown of the process equipment associated with the leaking heat exchanger. The owner or operator shall document the basis for the determination that a shutdown for repair would cause greater emissions than the emissions likely to result from delaying repair as specified in paragraphs (e)(2)(i)(A) and (B) of this section.

(A) The owner or operator shall calculate the potential emissions from the leaking heat exchanger by multiplying the concentration of total HAP listed in column A of Table 2 of this subpart in the cooling water from the leaking heat exchanger by the flowrate of the cooling water from the leaking heat exchanger by the expected duration of the delay. The owner or operator may calculate potential emissions using total organic carbon concentration instead of total HAP listed in column A of Table 2 of this subpart.

(B) The owner or operator shall determine emissions from purging and depressurizing the equipment that will result from the unscheduled shutdown for the repair.

(ii) If repair is delayed for reasons other than those specified in paragraph (e)(2)(i) of this section, the owner or operator may delay repair up to a maximum of 120 calendar days. The owner shall demonstrate that the necessary parts or personnel were not available.

§ 63.1410 Equipment leak provisions.

The owner or operator of each affected source shall comply with the requirements of 40 CFR part 63, subpart UU (national emission standards for equipment leaks (control level 2)) for all equipment, as defined under § 63.1402, that contains or contacts 5 weight-percent HAP or greater and operates 300 hours per year or more. The weight-percent HAP is determined for equipment using the organic HAP concentration measurement methods specified in § 63.1414(a). When complying

with the requirements of 40 CFR part 63, subpart SS, as referred to by 40 CFR part 63, subpart UU, the following apply for purposes of this subpart:

(a) Design evaluations are allowed for control devices that control emission points with total emissions less than 10 tons of organic HAP per year before control (*i.e.*, small control devices).

(b) When 40 CFR part 63, subpart SS refers to specific test methods for the measurement of organic HAP concentration, the test methods presented in §63.1414(a) shall be used.

(c) The option to measure TOC instead of organic HAP, as a basis for demonstrating compliance, is not allowed.

(d) Excused excursions are not allowed.

(e) The provisions in §63.1403(b), rather than the provisions in §63.982(f), are to be followed for combined vent streams.

(f) When a scrubber is used as a control device, the owner or operator shall follow the guidance provided in this subpart for design evaluations or performance tests, as appropriate, and for monitoring, recordkeeping, and reporting.

(g) When there are conflicts between the due dates for reports presented in 40 CFR part 63, subpart SS and this subpart, reports shall be submitted according to the due dates presented in this subpart.

(h) When there are conflicts between the recordkeeping and reporting requirements presented in 40 CFR part 63, subpart SS and this subpart, the owner or operator shall either follow both sets of requirements (*i.e.*, follow the requirements in 40 CFR part 63, subpart SS for emission points covered by 40 CFR part 63, subpart SS and follow the requirements of this subpart for emission points covered by this subpart) or shall follow the set of requirements they prefer. If an owner or operator chooses to follow just one set of requirements, the owner or operator shall identify which set of requirements are being followed and which set of requirements are being disregarded in the appropriate report.

§63.1411 [Reserved]

§63.1412 Continuous process vent applicability assessment procedures and methods.

(a) *General*. The provisions of this section provide procedures and methods for determining the applicability of the control requirements specified in §63.1405 to continuous process vents.

(b) *Sampling sites*. Sampling sites shall be located as follows:

(1) *Sampling site location*. The sampling site for determining volumetric flow rate, regulated organic HAP concentration, total organic HAP, net heating value, and TRE index value, shall be after the final recovery device (if any recovery devices are present) but prior to the inlet of any control device that is present and prior to release to the atmosphere.

(2) *Sampling site selection method*. Method 1 or 1A of 40 CFR part 60, appendix A, as appropriate, shall be used for selection of the sampling site. No traverse site selection method is needed for process vents smaller than 0.33 foot (0.10 meter) in nominal inside diameter.

(c) *Applicability assessment requirement*. The organic HAP concentrations, volumetric flow rates, heating values, organic HAP emission rates, TRE index values, and engineering assessment control applicability assessment requirements are to be determined during maximum representative operating conditions for the process, except as provided in paragraph (d) of this section, or unless the Administrator specifies or approves alternate operating conditions. Operations during periods of startup, shutdown, and malfunction shall not constitute representative conditions for the purpose of an applicability test.

(d) *Exceptions*. The owner or operator is not required to conduct a test that will cause any of the following situations:

(1) Causing damage to equipment;

(2) Necessitating that the owner or operator make a product that does not meet an existing specification for sale to a customer; or

(3) Necessitating that the owner or operator make a product in excess of demand.

(e) *Organic HAP concentration.* The organic HAP concentrations, used for TRE index value calculations in paragraph (j) of this section, shall be determined using the procedures specified in either § 63.1414(a) or by using the engineering assessment procedures in paragraph (k) of this section.

(f) *Volumetric flow rate.* The volumetric flow rate shall be determined using the procedures specified in § 63.1414(a), or by using the engineering assessment procedures in paragraph (k) of this section.

(g) *Heating value.* The net heating value shall be determined as specified in paragraphs (g)(1) and (2) of this section, or by using the engineering assessment procedures in paragraph (k) of this section.

(1) The net heating value of the continuous process vent shall be calculated using Equation 1:

$$H_T = K_1\left(\sum_{j=1}^{n} D_j H_j\right) \qquad \text{[Eq. 1]}$$

Where:

H_T=Net heating value of the sample, megaJoules per standard cubic meter, where the net enthalpy per mole of process vent is based on combustion at 25 °C and 760 millimeters of mercury, but the standard temperature for determining the volume corresponding to 1 mole is 20 °C, as in the definition of Q_S (process vent volumetric flow rate).

K_1 = Constant, 1.740×10^{-7} (parts per million)$^{-1}$ (gram-mole per standard cubic meter) (megaJoules per kilocalorie), where standard temperature for (gram-mole per standard cubic meter) is 20 °C.

D_j=Organic HAP concentration on a wet basis of compound j in parts per million, as measured by procedures indicated in paragraph (e) of this section. For process vents that pass through a final stream jet and are not condensed, the moisture is assumed to be 2.3 percent by volume.

H_j=Net heat of combustion of compound j, kilocalorie per gram-mole, based on combustion at 25 °C and 760 millimeters of mercury.

(2) The molar composition of the process vent (D_j) shall be determined using the methods specified in paragraphs (g)(2)(i) through (iii) of this section:

(i) The methods specified in § 63.1414(a) to measure the concentration of each organic compound.

(ii) American Society for Testing and Materials D1946–90 to measure the concentration of carbon monoxide and hydrogen.

(iii) Method 4 of 40 CFR part 60, appendix A to measure the moisture content of the stack gas.

(h) *Organic HAP emission rate.* The emission rate of organic HAP in the continuous process vent, as required by the TRE index value equation specified in paragraph (j) of this section, shall be calculated using Equation 2:

$$E = K_2\left(\sum_{j=1}^{n} C_j M_j\right) Q_S \qquad \text{[Eq. 2]}$$

Where:

E=Emission rate of organic HAP in the sample, kilograms per hour.

K_2=Constant, 2.494×10^{-6} (parts per million)$^{-1}$ (gram-mole per standard cubic meter) (kilogram/gram) (minutes/hour), where standard temperature for (gram-mole per standard cubic meter) is 20 °C.

n=Number of components in the sample.

C_j=Organic HAP concentration on a dry basis of organic compound j in parts per million as determined by the methods specified in paragraph (e) of this section.

M_j=Molecular weight of organic compound j, gram/gram-mole.

Q_S=Continuous process vent flow rate, dry standard cubic meter per minute, at a temperature of 20 °C.

(i) [Reserved]

(j) *TRE index value.* The owner or operator shall calculate the TRE index value of the continuous process vent using the equations and procedures in this paragraph, as applicable, and shall maintain records specified in § 63.1416(f).

(1) *TRE index value equation.* The equation for calculating the TRE index value is Equation 3:

$$TRE = 1/E_{HAP} * \left[A + B(Q_S) + C(H_T)\right] \qquad \text{[Eq. 3]}$$

Where:

TRE=TRE index value.

A, B, C=Coefficients presented in table 7 of this subpart.

E_{HAP}=Emission rate of total organic HAP, kilograms per hour, as calculated according to paragraph (h) or (k) of this section.

Q_S=Continuous process vent volumetric flow rate, standard cubic meters per minute, at a standard temperature of 20 °C, as calculated according to paragraph (f) or (k) of this section.

H_T=Continuous process vent net heating value, megaJoules per standard cubic meter, as calculated according to paragraph (g) or (k) of this section.

(2) *TRE index calculation*. The owner or operator of a continuous process vent shall calculate the TRE index value by using the equation and appropriate coefficients in Table 6 of this subpart. The owner or operator shall calculate the TRE index value for each control device scenario (*i.e.*, flare, thermal incinerator with 0 percent recovery, thermal incinerator with 70 percent recovery). The lowest TRE index value is to be compared to the applicability criteria specified in §63.1405(a).

(k) *Engineering assessment*. For purposes of TRE index value determinations, engineering assessments may be used to determine continuous process vent flow rate, net heating value, and total organic HAP emission rate for the representative operating condition expected to yield the lowest TRE index value. Engineering assessments shall meet the requirements of paragraphs (k)(1) through (4) of this section.

(1) If the TRE index value calculated using engineering assessment is greater than 4.0, the owner or operator is not required to perform the measurements specified in paragraphs (e) through (h) of this section.

(2) If the TRE index value calculated using engineering assessment is less than or equal to 4.0, the owner or operator is required either to perform the measurements specified in paragraphs (e) through (h) of this section for control applicability assessment or comply with the control requirements specified in §63.1405.

(3) Engineering assessment includes, but is not limited to, the following examples:

(i) Previous test results, provided the tests are representative of current operating practices.

(ii) Bench-scale or pilot-scale test data representative of the process under representative operating conditions.

(iii) Maximum volumetric flow rate, organic HAP emission rate, organic HAP concentration, or net heating value limit specified or implied within a permit limit applicable to the continuous process vent.

(iv) Design analysis based on accepted chemical engineering principles, measurable process parameters, or physical or chemical laws or properties. Examples of analytical methods include, but are not limited to, the following:

(A) Use of material balances based on process stoichiometry to estimate maximum organic HAP concentrations;

(B) Estimation of maximum volumetric flow rate based on physical equipment design such as pump or blower capacities;

(C) Estimation of organic HAP concentrations based on saturation conditions; and

(D) Estimation of maximum expected net heating value based on the stream concentration of each organic compound.

§63.1413 Compliance demonstration procedures.

(a) *General*. For each emission point, the owner or operator shall meet three stages of compliance, with exceptions specified in this subpart. First, the owner or operator shall conduct a performance test or design evaluation to demonstrate the performance of the control device or control technology being used. Second, the owner or operator shall meet the requirements for demonstrating initial compliance (*e.g.*, a demonstration that the required percent reduction is achieved). Third, the owner or operator shall meet the requirements for demonstrating continuous compliance through some form of monitoring (*e.g.*, continuous monitoring of operating parameters).

(1) *Large control devices and small control devices*. A large control device is a control device that controls emission points with total emissions of 10 tons of organic HAP per year or more before control. A small control device is a control device that controls emission points with total emissions less than 10 tons of organic HAP per year before control.

(i) *Large control devices.* Owners or operators are required to conduct a performance test for a large control device. The establishment of parameter monitoring levels shall be based on data obtained during the required performance test.

(ii) *Small control devices.* Owners or operators are required to conduct a design evaluation for a small control device. An owner or operator may choose to conduct a performance test for a small control device and such a performance test shall follow the procedures specified in this section, as appropriate. Whenever a small control device becomes a large control device, the owner or operator shall conduct a performance test following the procedures specified in this section, as appropriate. Notification that such a performance test is required, the site-specific test plan, and the results of the performance test shall be provided to the Administrator as specified in § 63.1417. Except as provided in § 63.1415(a)(2), the parameter monitoring levels for small control devices shall be set based on the design evaluation required by paragraph (a)(3) of this section. Further, when setting the parameter monitoring level(s) based on the design evaluation, the owner or operator shall submit the information specified in § 63.1417(d)(7) for review and approval as part of the Precompliance Report.

(2) *Performance tests.* Performance testing shall be conducted in accordance with the General Provisions at § 63.7(a)(1), (a)(3), (d), (e)(1), (e)(2), (e)(4), (g), and (h), with the exceptions specified in paragraph (a)(1) of this section. Data shall be reduced in accordance with the EPA approved methods specified in this subpart or, if other test methods are used, the data and methods shall be validated according to the protocol in Method 301 of appendix A of this part.

(i) *Additional control devices not requiring performance tests.* An owner or operator is not required to conduct a performance test when using one of the following control devices:

(A) A boiler or process heater with a design heat input capacity of 44 megawatts or greater.

(B) A boiler or process heater into which the vent stream is introduced with the primary fuel or is used as the primary fuel.

(C) A boiler or process heater burning hazardous waste for which the owner or operator:

(*1*) Has been issued a final permit under 40 CFR part 270 and complies with the requirements of 40 CFR part 266, subpart H; or

(*2*) Has certified compliance with the interim status requirements of 40 CFR part 266, subpart H.

(D) A hazardous waste incinerator for which the owner or operator has been issued a final permit under 40 CFR part 270 and complies with the requirements of 40 CFR part 264, subpart O, or has certified compliance with the interim status requirements of 40 CFR part 265, subpart O.

(E) A control device for which a performance test was already conducted for determining compliance with another regulation promulgated by the EPA, provided the test was conducted using the same Methods specified in this section, and either no deliberate process changes have been made since the test, or the owner or operator can demonstrate that the results of the performance test, with or without adjustments, reliably demonstrate compliance despite process changes. Parameter monitoring levels established based on such a performance test may be used for purposes of demonstrating continuous compliance with this subpart.

(ii) *Exceptions to performance test requirements in the General Provisions.* (A) Performance tests shall be conducted at maximum representative operating conditions achievable during either the 6-month period ending 2 months before the Notification of Compliance Status required by § 63.1417(e) is due, or during the 6-month period surrounding the date of the performance test (*i.e.*, the period beginning 3 months prior to the performance test and ending 3 months after the performance test). In achieving maximum representative operating conditions, an owner or operator is not required to cause damage to equipment, make a product that does not meet an existing specification for sale

to a customer, or make a product in excess of demand.

(B) When §63.7(g) references the Notification of Compliance Status requirements in §63.9(h), the requirements in §63.1417(e) shall apply for purposes of this subpart.

(C) Performance tests shall be performed no later than 150 days after the compliance dates specified in this subpart (*i.e.*, in time for the results to be included in the Notification of Compliance Status), rather than according to the time periods in §63.7(a)(2).

(3) *Design evaluations.* To demonstrate the organic HAP removal efficiency for a control device or control technology, a design evaluation shall address the composition and organic HAP concentration of the vent stream(s) entering the control device or control technology, the operating parameters of the control device or control technology, and other conditions or parameters that reflect the performance of the control device or control technology. A design evaluation also shall address other vent stream characteristics and control device operating parameters as specified in any one of paragraphs (a)(3)(i) through (vi) of this section, depending on the type of control device that is used. If the vent stream(s) is not the only inlet to the control device, the efficiency demonstration also shall consider all other vapors, gases, and liquids, other than fuels, received by the control device.

(i) For a scrubber, the design evaluation shall consider the vent stream composition, constituent concentrations, liquid-to-vapor ratio, scrubbing liquid flow rate and concentration, temperature, and the reaction kinetics of the constituents with the scrubbing liquid. The design evaluation shall establish the design exhaust vent stream organic compound concentration level and include the additional information in paragraphs (a)(3)(i)(A) and (B) of this section for trays and a packed column scrubber:

(A) Type and total number of theoretical and actual trays; and

(B) Type and total surface area of packing for entire column, and for individual packed sections if column contains more than one packed section.

(ii) For a condenser, the design evaluation shall consider the vent stream flow rate, relative humidity, and temperature and shall establish the design outlet organic HAP compound concentration level, design average temperature of the condenser exhaust vent stream, and the design average temperatures of the coolant fluid at the condenser inlet and outlet. The temperature of the gas stream exiting the condenser shall be measured and used to establish the outlet organic HAP concentration.

(iii) For a carbon adsorption system that regenerates the carbon bed directly onsite in the control device, such as a fixed-bed adsorber, the design evaluation shall consider the vent stream flow rate, relative humidity, and temperature and shall establish the design exhaust vent stream organic compound concentration level, adsorption cycle time, number and capacity of carbon beds, type and working capacity of activated carbon used for carbon beds, design total regeneration stream mass or volumetric flow over the period of each complete carbon bed regeneration cycle, design carbon bed temperature after regeneration, design carbon bed regeneration time, and design service life of carbon. For vacuum desorption, the pressure drop shall be included.

(iv) For a carbon adsorption system that does not regenerate the carbon bed directly onsite in the control device, such as a carbon canister, the design evaluation shall consider the vent stream mass or volumetric flow rate, relative humidity, and temperature and shall establish the design exhaust vent stream organic compound concentration level, capacity of carbon bed, type and working capacity of activated carbon used for carbon bed, and design carbon replacement interval based on the total carbon working capacity of the control device and source operating schedule.

(v) For an enclosed combustion device with a minimum residence time of 0.5 seconds and a minimum temperature of 760 C, the design evaluation shall document that these conditions exist.

(vi) For a combustion control device that does not satisfy the criteria in

paragraph (a)(3)(v) of this section, the design evaluation shall address the following characteristics, depending on the type of control device:

(A) For a thermal vapor incinerator, the design evaluation shall consider the autoignition temperature of the organic HAP, shall consider the vent stream flow rate, and shall establish the design minimum and average temperature in the combustion zone and the combustion zone residence time.

(B) For a catalytic vapor incinerator, the design evaluation shall consider the vent stream flow rate and shall establish the design minimum and average temperatures across the catalyst bed inlet and outlet.

(C) For a boiler or process heater, the design evaluation shall consider the vent stream flow rate, shall establish the design minimum and average flame zone temperatures and combustion zone residence time, and shall describe the method and location where the vent stream is introduced into the flame zone.

(4) *Establishment of parameter monitoring levels.* The owner or operator of a control device that has one or more parameter monitoring level requirements specified under this subpart, or specified under subparts referenced by this subpart, shall establish a maximum or minimum level, as denoted on Table 4 of this subpart, for each measured parameter using the procedures specified in paragraph (a)(4)(i) or (ii) of this section. Except as otherwise provided in this subpart, the owner or operator shall operate control devices such that the daily average, batch cycle daily average, or block average of monitored parameters, established as specified in this paragraph, remains above the minimum level or below the maximum level, as appropriate.

(i) *Establishment of parameter monitoring levels based on performance tests.* (A) *Emission points other than batch process vents.* During initial compliance testing, the appropriate parameter shall be continuously monitored during the required 1-hour test runs. The monitoring level(s) shall then be established as the average of the maximum (or minimum) point values from the three test runs. The average of the maximum values shall be used when establishing a maximum level, and the average of the minimum values shall be used when establishing a minimum level.

(B) *Aggregate batch vent streams.* For aggregate batch vent streams the monitoring level shall be established in accordance with paragraph (a)(4)(i)(A) of this section.

(C) *Batch process vents.* The monitoring level(s) shall be established using the procedures specified in paragraphs (a)(4)(i)(C)(*1*) or (*2*) of this section. For batch process vents complying with the percent reduction standards specified in § 63.1406 or § 63.1407, parameter monitoring levels shall be established by the design evaluation, or during the performance test so that the specified percent reduction from § 63.1406 or § 63.1407, as appropriate, is met.

(*1*) If more than one batch emission episode or more than one portion of a batch emission episode has been selected to be controlled, a single level for the batch cycle shall be calculated as follows:

(*i*) During initial compliance testing, the appropriate parameter shall be monitored continuously and recorded once every 15 minutes at all times when batch emission episodes, or portions thereof, selected to be controlled are vented to the control device. A minimum of three recorded values shall be obtained for each batch emission episode, or portion thereof, regardless of the length of time emissions are occurring.

(*ii*) The average monitored parameter value shall be calculated for each batch emission episode, or portion thereof, in the batch cycle selected to be controlled. The average shall be based on all values measured during the required performance test.

(*iii*) If the level to be established is a maximum operating parameter, the level shall be defined as the minimum of the average parameter values from each batch emission episode, or portion thereof, in the batch cycle selected to be controlled (*i.e.*, identify the batch emission episode, or portion thereof, which requires the lowest parameter value in order to assure compliance; the average parameter value that is necessary to assure compliance for

that batch emission episode, or portion thereof, shall be the level for all batch emission episodes, or portions thereof, in the batch cycle that are selected to be controlled).

(*iv*) If the level to be established is a minimum operating parameter, the level shall be defined as the maximum of the average parameter values from each batch emission episode, or portion thereof, in the batch cycle selected to be controlled (*i.e.*, identify the batch emission episode, or portion thereof, which requires the highest parameter value in order to assure compliance; the average parameter value that is necessary to assure compliance for that batch emission episode, or portion thereof, shall be the level for all batch emission episodes, or portions thereof, in the batch cycle that are selected to be controlled).

(*v*) Alternatively, an average monitored parameter value shall be calculated for the entire batch cycle based on all values recorded during each batch emission episode, or portion thereof, selected to be controlled.

(*2*) Instead of establishing a single level for the batch cycle, as described in paragraph (a)(4)(i)(C)(*1*) of this section, an owner or operator may establish separate levels for each batch emission episode, or portion thereof, selected to be controlled. Each level shall be determined as specified in paragraphs (a)(4)(i)(C)(*1*)(*i*) through (*v*) of this section.

(*3*) The batch cycle shall be defined in the Notification of Compliance Status, as specified in §63.1417(e)(2). Said definition shall include an identification of each batch emission episode. The definition of batch cycle shall also include the information required to determine parameter monitoring compliance for partial batch cycles (*i.e.*, when part of a batch cycle is accomplished during 2 different operating days) for those parameters averaged on a batch cycle daily average basis.

(ii) *Establishment of parameter monitoring levels based on performance tests, engineering assessments, and/or manufacturer's recommendations.* Parameter monitoring levels may be established based on the parameter values measured during the performance test supplemented by engineering assessments and/or manufacturer's recommendations. Performance testing is not required to be conducted over the entire range of expected parameter values. When setting the parameter monitoring level(s) using the procedures specified in this paragraph, the owner or operator shall submit the information specified in §63.1417(d)(7) for review and approval as part of the Precompliance Report.

(b) *Initial and continuous compliance for storage vessels.* (1) Initial compliance with the percent reduction standard specified in §63.1404(a)(1) shall be demonstrated following the procedures in 40 CFR part 63, subpart SS.

(2) Initial compliance with the work practice standard specified in §63.1404(a)(2) shall be demonstrated following the procedures in 40 CFR part 63, subpart WW.

(3) Continuous compliance with the percent reduction standard specified in §63.1404(a)(1) shall be demonstrated following the procedures in 40 CFR part 63, subpart SS.

(4) Continuous compliance with the work practice standard specified in §63.1404(a)(2) shall be demonstrated following the procedures in 40 CFR part 63, subpart WW.

(5) Initial and continuous compliance with the alternative standard specified in §63.1404(b) shall be demonstrated following the procedures in paragraph (f) of this section.

(c) *Initial and continuous compliance for continuous process vents.* (1) Initial compliance with the percent reduction standard specified in §63.1405(a)(2) shall be demonstrated following the procedures in 40 CFR part 63, subpart SS.

(2) Initial compliance with §63.1405(a)(1) (venting of emissions to a flare) shall be demonstrated following the procedures specified in paragraph (g) of this section.

(3) Continuous compliance with the percent reduction standard specified in §63.1405(a)(2) shall be demonstrated following the procedures in 40 CFR part 63, subpart SS.

(4) Continuous compliance with §63.1405(a)(1) (venting of emissions to a flare) shall be demonstrated following the continuous monitoring procedures specified in §63.1415.

(5) Initial and continuous compliance with the alternative standard specified in § 63.1405(b) shall be demonstrated following the procedures in paragraph (f) of this section.

(d) *Initial and continuous compliance for aggregate batch vent streams.* (1) Initial compliance with the percent reduction standard specified in § 63.1408(a)(1)(ii) and (2)(ii) shall be demonstrated following the procedures for continuous process vents specified in paragraph (c)(1) of this section.

(2) Initial compliance with § 63.1408(a)(1)(i) and (2)(i) (venting of emissions to a flare) shall be demonstrated following the procedures specified in paragraph (g) of this section.

(3) Continuous compliance with the percent reduction standard specified in § 63.1408(a)(1)(ii) and (2)(ii) shall be demonstrated following the procedures for continuous process vents specified in paragraph (c)(3) of this section.

(4) Continuous compliance with § 63.1408(a)(1)(i) and (a)(2)(i) (venting of emissions to a flare) shall be demonstrated following the continuous monitoring procedures specified in § 63.1415.

(5) Initial and continuous compliance with the alternative standard specified in § 63.1408(b)(1) shall be demonstrated following the procedures in paragraph (f) of this section.

(6) Initial and continuous compliance with the mass emission limit specified in § 63.1408(b)(2) shall be demonstrated following the procedures in paragraph (e)(2) of this section.

(e) *Initial and continuous compliance for batch process vents.* (1) *Compliance with percent reduction standards.* Owners or operators opting to comply with the percent reduction standards specified in § 63.1406(a)(1)(ii) and (a)(2)(ii) or § 63.1407(a)(2)(ii) and (a)(3)(ii) shall select portions of the batch process vent emissions (*i.e.*, select batch emission episodes or portions of batch emission episodes) to be controlled such that the specified percent reduction is achieved for the batch cycle. Paragraphs (e)(1)(i) and (ii) of this section specify how the performance of a control device or control technology is to be determined. Paragraph (e)(1)(iii) of this section specifies how to demonstrate that the required percent emission reduction is achieved for the batch cycle.

(i) *Design evaluation.* The design evaluation shall comply with the provisions in paragraph (a)(3) of this section. The design evaluation shall include the value(s) and basis for the parameter monitoring level(s) required by § 63.1415. The design evaluation shall determine either of the following:

(A) *Each batch emission episode.* The control device efficiency for each batch emission episode that the owner or operator selects to control.

(B) *One or more representative batch emission episodes.* The control device efficiency for one or more batch emission episodes provided that the owner or operator demonstrates that the control device achieves the same or higher efficiency for all other batch emission episodes that the owner or operator selects to control.

(ii) *Performance test.* An owner or operator shall conduct performance tests following the procedures in paragraph (e)(1)(ii)(A) of this section, the procedures in paragraph (e)(1)(ii)(B) of this section, or a combination of the two procedures. Under paragraph (e)(1)(ii)(A) of this section, a performance test is conducted for each batch emission episode selected for control. Under paragraph (e)(1)(ii)(B) of this section, an owner or operator groups together several batch emission episodes and conducts a single performance test for the batch emission episode that is the most challenging, in terms of achieving emission reductions, for the control device or control technology; thereby demonstrating that the achieved emission reduction for the tested batch emission episode is the minimum control device or control technology performance expected for each batch emission episode in the group. An owner or operator may use the concept provided by paragraph (e)(1)(ii)(B) of this section for several different groups of batch emission episodes.

(A) *Testing each batch emission episode.* A performance test shall be performed for each batch emission episode, or portion thereof, that the owner or operator selects to control. Performance

tests shall be conducted using the testing procedures specified in §63.1414(a) and (b) and the following procedures:

(*1*) Only one test (*i.e.*, only one run) is required for each batch emission episode selected by the owner or operator for control.

(*2*) Except as specified in paragraph (e)(1)(ii)(A)(3) of this section, the performance test shall be conducted over the entire period of emissions selected by the owner or operator for control.

(*3*) An owner or operator may choose to test only those periods of the batch emission episode during which the emission rate for the entire batch emission episode can be determined or during which the organic HAP emissions are greater than the average emission rate of the batch emission episode. The owner or operator choosing either of these options shall develop an emission profile illustrating the emission rate (kilogram per unit time) over the entire batch emission episode, based on either process knowledge or test data, to demonstrate that test periods are representative. Examples of information that could constitute process knowledge include calculations based on material balances and process stoichiometry. Previous test results may be used to develop the emission profile provided the results are still relevant to the current batch process vent conditions. The emission profile shall be included in the site-specific test plan required by §63.1417(h)(2).

(*4*) When choosing sampling sites using the methods specified in §63.1414(a)(1), inlet sampling sites shall be located as specified in paragraphs (e)(1)(ii)(A)(*4*)(*i*) and (*ii*) of this section. Outlet sampling sites shall be located at the outlet of the control device prior to release to the atmosphere.

(*i*) The control device inlet sampling site shall be located at the exit from the batch unit operation after any condensers operating as process condensers and before any control device.

(*ii*) If a batch process vent is introduced with the combustion air or as a secondary fuel into a boiler or process heater with a design capacity less than 44 megawatts, selection of the location of the inlet sampling sites shall ensure the measurement of total organic HAP concentrations in all batch process vents and primary and secondary fuels introduced into the boiler or process heater.

(B) *Testing only the most challenging batch emission episode.* Under this paragraph, an owner or operator groups together several batch emission episodes and conducts a single performance test for the batch emission episode that is the most challenging, in terms of achieving emission reductions, for the control device or control technology; thereby demonstrating that the achieved emission reduction for the tested batch emission episode is the minimum control device or control technology performance expected for each batch emission episode in the group. The owner or operator shall use the control device efficiency determined from the performance test for all the other batch emission episodes in that group for purposes of paragraph (e)(2)(iii) of this section. Performance tests shall be conducted using the testing procedures specified in §63.1414(a) and (b) and the following procedures:

(*1*) The procedures specified in paragraphs (e)(2)(ii)(A)(*2*) through (*4*) of this section.

(*2*) Develop an emission profile illustrating the emission rate (kilogram/unit time) for each period of emissions to be addressed by the performance test. The emission profile shall be based on either process knowledge or test data. Examples of information that could constitute process knowledge include calculations based on material balances and process stoichiometry. Previous test results may be used to develop the emission profile provided the results are still relevant to the current batch process vent conditions. The emission profile shall be included in the site-specific test plan required by §63.1417(h)(2).

(*3*) Provide rationale for why the control device efficiency for all the other batch emission episodes in the group will be greater than or equal to the control device efficiency achieved during the tested period of the most challenging batch emission episode in the group, as specified in the Notification of Compliance Status Report required by §63.1417(e).

(iii) *Batch cycle percent reduction.* The percent reduction for the batch cycle for an individual reactor batch process vent and the overall percent reduction for the collection of non-reactor batch process vents within the affected source shall be determined using Equation 1 of this section and the control device efficiencies specified in paragraphs (e)(1)(iii)(A) through (C) of this section. All information used to calculate the batch cycle percent reduction for an individual reactor batch process vent, including a definition of the batch cycle identifying all batch emission episodes, shall be recorded as specified in § 63.1416 (d)(1)(ii). All information used to calculate the overall percent reduction for the collection of non-reactor batch process vents within the affected source, including a list of all batch emission episodes from the collection of non-reactor batch process vents within the affected source, shall be recorded as specified in § 63.1416 (d)(1)(ii). This information shall include identification of those batch emission episodes, or portions thereof, selected for control. This information shall include estimates of uncontrolled organic HAP emissions for those batch emission episodes, or portions thereof, that are not selected for control, determined as specified in paragraph (e)(2)(iii)(D) or (E) of this section.

$$PR = \frac{\sum_{i=1}^{n} E_{unc} + \sum_{i=1}^{n} E_{inlet,con} - \sum_{i=1}^{n} (1-R)\, E_{inlet,con}}{\sum_{i=1}^{n} E_{unc} + \sum_{i=1}^{n} E_{inlet,con}} (100) \qquad \text{[Eq. 1]}$$

Where:

PR = Percent reduction.

E_{unc} = Mass rate of total organic HAP for uncontrolled batch emission episode i, kg/hr.

$E_{inlet,con}$ = Mass rate of total organic HAP for controlled batch emission episode i at the inlet to the control device, kg/hr.

R = Control efficiency of control device as specified in paragraphs (e)(1)(iii)(A) through (e)(1)(iii)(C) of this section. The value of R may vary between batch emission episodes.

n=Number of uncontrolled batch emission episodes, controlled batch emission episodes, and control devices. The value of n is not necessarily the same for these three items.

(A) When conducting a performance test, the control efficiency of the control device shall be determined following the procedures in § 63.1414(b)(4).

(B) For combustion control devices listed in paragraphs (a)(2)(i)(A) and (B) of this section and for flares, the control efficiency in Equation 1 of this section shall be 98 percent.

(C) If a performance test is not required, the control efficiency shall be based on the design evaluation specified in paragraph (e)(1)(i) of this section.

(D) For batch process vents estimated through engineering assessment, as described in § 63.1414(f)(6), to emit less than 10 tons per year of uncontrolled organic HAP emissions, the owner or operator may use in Equation 1 of this section the emissions determined using engineering assessment or may determine organic HAP emissions using any of the procedures specified in § 63.1414(d).

(E) For batch process vents estimated through engineering assessment, as described in § 63.1414(d)(6), to emit 10 tons per year or greater of uncontrolled organic HAP emissions, organic HAP emissions shall be estimated following the procedures specified in § 63.1414(d).

(F) Owners or operators designating a condenser, sometimes operated as a process condenser, as a control device shall conduct inprocess recycling and follow the recordkeeping requirements specified in § 63.1416(d)(1)(vi).

(iv) *Initial compliance with percent reduction standards.* Initial compliance with the percent reduction standards specified in § 63.1406(a)(1)(ii) and (2)(ii) and § 63.1407(a)(2)(ii) and (3)(ii) is achieved when the owner or operator demonstrates, following the procedures in paragraphs (e)(1)(i) through (iii) of this section, that the required percent reduction is achieved.

(v) *Continuous compliance with percent reduction standards.* Continuous compliance with the percent reduction standards specified in § 63.1406(a)(1)(ii) and (2)(ii) and § 63.1407(a)(2)(ii) and (3)(ii) shall be demonstrated following the continuous monitoring procedures specified in § 63.1415.

(2) *Compliance with mass emission limit standards.* Each owner or operator shall determine initial and continuous compliance with the mass emission limits

specified in §63.1406 (a)(1)(iii) and (a)(2)(iii), according to the following procedures, as appropriate:

(i) If production at an affected source is exclusively non-solvent-based amino/phenolic resin or is exclusively solvent-based amino/phenolic resin, or an owner or operator chooses to meet the non-solvent-based emission limit, the owner or operator shall demonstrate initial and continuous compliance as follows:

(A) *Initial compliance.* Initial compliance shall be based on the average of the first 6 monthly average emission rate data points. The 6-month average shall be compared to the mass emission limit specified in §63.1406 (a)(1)(iii) and (a)(2)(iii), as appropriate.

(B) *Continuous compliance.* For the first year of compliance, continuous compliance shall be based on a cumulative average monthly emission rate calculated each month based on the available monthly emission rate data points (*e.g.*, 7 data points after 7 months of operation, 8 data points after 8 months of operation) beginning the first month after initial compliance is demonstrated. The first continuous compliance cumulative average monthly emission rate shall be calculated using the first 7 monthly average emission rate data points. After the first year of compliance, a 12-month rolling average monthly emission rate shall be calculated each month based on the previous 12 monthly emission rate data points. Continuous compliance shall be determined by comparing the cumulative average monthly emission rate or the 12-month rolling average monthly emission rate to the mass emission limit specified in §63.1406 (a)(1)(iii) and (a)(2)(iii), as appropriate.

(C) *Procedures to determine the monthly emission rate.* The monthly emission rate, kilograms of organic HAP per megagram of product, shall be determined at the end of each month using Equation 2 of this section:

$$ER = \frac{\sum_{i=1}^{n} E_i}{RP_M} \qquad \text{[Eq. 2]}$$

Where:

ER=Emission rate of organic HAP from reactor batch process vents, kg of HAP/Mg product.

E_i=Emission rate of organic HAP from reactor batch process vent i as determined using the procedures specified in paragraph (e)(2)(i)(C)(1) of this section, kg/month.

RP_m=Amount of resin produced in one month as determined using the procedures specified in paragraph (e)(2)(i)(C)(*4*) of this section, Mg/month.

n=Number of batch process vents.

(*1*) The monthly emission rate of organic HAP, in kilograms per month, from an individual batch process vent (E_i) shall be determined using Equation 3 of this section. Once organic HAP emissions for a batch cycle (E_{cyclei}) have been estimated, as specified in either paragraph (e)(2)(i)(C)(*2*) or (*3*) of this section, the owner or operator may use the estimated organic HAP emissions (E_{cyclei}) to determine E_i using Equation 3 of this section until the estimated organic HAP emissions (E_{cyclei}) are no longer representative due to a process change or other reasons known to the owner or operator. If organic HAP emissions for a batch cycle (E_{cyclei}) are determined to no longer be representative, the owner or operator shall redetermine organic HAP emissions for the batch cycle (E_{cyclei}) following the procedures in paragraph (e)(2)(i)(C)(*2*) or (*3*) of this section, as appropriate.

$$Ei = \sum_{i=1}^{n} \left(N_i\right)\left(E_{cycle_i}\right) \qquad \text{[Eq. 3]}$$

Where:

E_i=Monthly emissions from a batch process vent, kg/month.

N_i=Number of type i batch cycles performed monthly, cycles/month.

E_{cyclei}=Emissions from the batch process vent associated with a single type i batch cycle, as determined using the procedures specified in either paragraph (e)(2)(i)(C)(*2*) or (*3*) of this section, kg/batch cycle.

n=Number of different types of batch cycles that cause the emission of organic HAP from the batch process vent.

(*2*) For reactor batch process vents estimated through engineering assessment, as described in §63.1414(d)(6), to emit less than 10 tons per year of uncontrolled organic HAP emissions, the

owner or operator may use the emissions determined using engineering assessment in Equation 3 of this section or may determine organic HAP emissions using any of the procedures specified in § 63.1414(d). For reactor batch process vents estimated through engineering assessment, as described in § 63.1414(d)(6), to emit 10 tons per year or greater of uncontrolled organic HAP emissions, uncontrolled organic HAP emissions from the batch emission episodes making up the batch cycle shall be estimated following the procedures specified in § 63.1414(d).

(*3*) For reactor batch process vents vented to a control device or control technology, controlled organic HAP emissions shall be determined as follows:

(*i*) Uncontrolled organic HAP emissions shall be determined following the procedures in paragraph (e)(2)(i)(C)(2) of this section.

(*ii*) Control device or control technology efficiency shall be determined using the procedures in paragraph (e)(1)(i) of this section for small control devices or the procedures in paragraph (e)(1)(ii) of this section for large control devices.

(*iii*) Controlled organic HAP emissions shall be determined by applying the control device or control technology efficiency, determined in paragraph (e)(2)(i)(C)(*3*)(*ii*) of this section, to the uncontrolled organic HAP emissions, determined in paragraph (e)(2)(i)(C)(*3*)(*i*) of this section.

(*4*) The rate of resin produced, RP_M (Mg/month), shall be determined based on production records certified by the owner or operator to represent actual production for the month. A sample of the records selected by the owner or operator for this purpose shall be provided to the Administrator in the Precompliance Report as required by § 63.1417(d).

(ii) If production at an affected source reflects a mix of solvent-based and non-solvent-based resin and the owner or operator does not choose to meet the non-solvent-based emission limit specified in § 63.1406 (a)(1)(iii) or (a)(2)(iii), as applicable, the owner or operator shall demonstrate initial and continuous compliance as follows:

(A) *Procedures for determining a site-specific emission limit.* A site-specific emission limit shall be determined using Equation 4 of this section.

$$\mathrm{SSEL} = \frac{(\mathrm{MGs} * \mathrm{ELs}) + (\mathrm{MGns} * \mathrm{ELns})}{\mathrm{MGs} + \mathrm{MGns}} \qquad [\text{Eq. } 4]$$

Where:

SSEL=Site specific emission limit, kg of organic HAP/Mg of product.

MGs=Megagrams of solvent-based resin product produced, megagrams.

MGns=Megagrams of non-solvent-based resin product produced, megagrams.

ELs=Emission limit for solvent-based resin product, kg organic HAP/Mg solvent-based resin product.

ELns=Emission limit for non-solvent-based resin product, kg organic HAP/Mg non-solvent-based resin product.

(B) *Initial compliance.* For purposes of determining initial compliance, the site-specific emission limit shall be based on production for the first 6 months beginning January 20, 2000 or the first 6 months after initial start-up, whichever is later. Using the site-specific emission limit, initial compliance shall be demonstrated using the procedures in paragraph (e)(2)(i)(A) of this section, as appropriate.

(C) *Continuous compliance.* For purposes of determining continuous compliance for the period of operation starting at the beginning of the 7th month and ending after the 12th month, the site-specific emission limit shall be determined each month based on production for the cumulative period. For purposes of determining continuous compliance after the first year of production, the site-specific emission limit shall be determined each month based on production for a 12-month rolling period. Using the site-specific emission limit, continuous compliance shall be demonstrated using the procedures in paragraph

(e)(2)(i)(B) of this section, as appropriate.

(3) *Compliance by venting to a flare.* Initial compliance with the standards specified in §63.1406(a)(1)(i) and (a)(2)(i) and §63.1407(a)(2)(i) and (a)(3)(i) shall be demonstrated following the procedures specified in paragraph (g) of this section. Continuous compliance with these standards shall be demonstrated following the continuous monitoring procedures specified in §63.1415.

(4) *Compliance with alternative standard.* Initial and continuous compliance with the alternative standard specified in §§63.1406(b) and 63.1407(b)(1) shall be demonstrated following the procedures in paragraph (f) of this section.

(f) *Compliance with alternative standard.* Initial and continuous compliance with the alternative standards in §§63.1404(b), 63.1405(b), 63.1406(b), 63.1407(b)(1), and 63.1408(b)(1) are demonstrated when the daily average outlet organic HAP concentration is 20 ppmv or less when using a combustion control device or 50 ppmv or less when using a non-combustion control device. To demonstrate initial and continuous compliance, the owner or operator shall follow the test method specified in §63.1414(a)(6) and shall be in compliance with the monitoring provisions in §63.1415(e) no later than the initial compliance date and on each day thereafter.

(g) *Flare compliance demonstrations.* Notwithstanding any other provision of this subpart, if an owner or operator of an affected source uses a flare to comply with any of the requirements of this subpart, the owner or operator shall comply with paragraphs (g)(1) through (3) of this section. When using a flare to comply, the owner or operator is not required to conduct a performance test to determine percent emission reduction or outlet organic HAP concentration. If a compliance demonstration has been conducted previously for a flare, using the techniques specified in paragraphs (g)(1) through (3) of this section, that compliance demonstration may be used to satisfy the requirements of this paragraph if either no deliberate process changes have been made since the compliance demonstration, or the results of the compliance demonstration reliably demonstrate compliance despite process changes.

(1) Conduct a visible emission test using the techniques specified in §63.11(b)(4).

(2) Determine the net heating value of the gas being combusted using the techniques specified in §63.11(b)(6).

(3) Determine the exit velocity using the techniques specified in either §63.11(b)(7)(i) (and §63.11(b)(7)(iii), where applicable) or §63.11(b)(8), as appropriate.

(h) *Deviations.* Paragraphs (h)(1) through (4) of this section describe deviations from the emission limits, the operating limits, the work practice standards, and the emission standard, respectively. Paragraph (h)(5) of this section describes situations that are not deviations. Paragraph (h)(6) of this section describes periods that are excluded from compliance determinations.

(1) *Deviations from the emission limit.* The following are deviations from the emission limit:

(i) Exceedance of the condenser outlet gas temperature limit (*i.e.*, having an average value higher than the established maximum level) monitored according to the provisions of §63.1415(b)(3);

(ii) Exceedance of the outlet concentration (*i.e.*, having an average value higher than the established maximum level) monitored according to the provisions of §63.1415(b)(8);

(iii) Exceedance of the mass emission limit (*i.e.*, having an average value higher than the specified limit) monitored according to the provisions of paragraph (e)(2) of this section; and

(iv) Exceedance of the organic HAP outlet concentration limit (*i.e.*, having an average value higher than the specified limit) monitored according to the provisions of §63.1415(e).

(2) *Deviations from the operating limit.* Exceedance of the parameters monitored according to §63.1415(b)(1), (b)(2), and (b)(4) through (7) are considered deviations from the operating limit. An exceedance of the monitored parameter has occurred if:

(i) The parameter, averaged over the operating day or block, is below a minimum value established during the initial compliance demonstration; or (ii)

The parameter, averaged over the operating day or block, is above the maximum value established during the initial compliance demonstration.

(3) *Deviations from the work practice standard.* If all flames at the pilot light of a flare are absent, there has been a deviation from the work practice standard.

(4) *Deviation from the emission standard.* If an affected source is not operated during periods of start-up, shutdown, or malfunction in accordance with the affected source's Start-up, Shutdown, and Malfunction Plan, there has been a deviation from the emission standard. If monitoring data are insufficient, as described in paragraphs (h)(4)(i) through (iii) of this section, there has been a deviation from the emission standard.

(i) The period of control device or control technology operation is 4 hours or greater in an operating day, and monitoring data are insufficient to constitute a valid hour of data, as defined in paragraph (h)(4)(iii) of this section, for at least 75 percent of the operating hours;

(ii) The period of control device or control technology operation is less than 4 hours in an operating day, and more than one of the hours during the period of operation does not constitute a valid hour of data due to insufficient monitoring data; and

(iii) Monitoring data are insufficient to constitute a valid hour of data, as used in paragraphs (h)(4)(i) and (ii) of this section, if measured values are unavailable for any of the 15-minute periods within the hour. For data compression systems approved under § 63.1417(k)(3), monitoring data are insufficient to calculate a valid hour of data if there are less than four data measurements made during the hour.

(5) *Situations that are not deviations.* If an affected source is operated during periods of start-up, shutdown, or malfunction in accordance with the affected source's Start-up, Shutdown, and Malfunction Plan, and any of the situations listed in paragraphs (h)(5)(i) through (iv) of this section occur, such situations shall not be considered to be deviations.

(i) The daily average value of a monitored parameter is above the maximum level or below the minimum level established;

(ii) Monitoring data cannot be collected during monitoring device calibration check or monitoring device malfunction;

(iii) Monitoring data are not collected during periods of start-up, shutdown, or malfunction; and

(iv) Monitoring data are not collected during periods of nonoperation of the affected source or portion thereof (resulting in cessation of the emissions to which the monitoring applies).

(6) *Periods not considered to be part of the period of control or recovery device operation.* The periods listed in paragraphs (h)(6)(i) through (v) of this section are not considered to be part of the period of control or recovery device operation for purposes of determining averages or periods of control device or control technology operation.

(i) Monitoring system breakdowns, repairs, calibration checks, and zero (low-level) and high-level adjustments;

(ii) Start-ups;

(iii) Shutdowns;

(iv) Malfunctions; or

(v) Periods of nonoperation of the affected source (or portion thereof), resulting in cessation of the emissions to which the monitoring applies.

[65 FR 3290, Jan. 20, 2000, as amended at 65 FR 8768, Feb. 22, 2000]

§ 63.1414 Test methods and emission estimation equations.

(a) *Test methods.* When required to conduct a performance test, the owner or operator shall use the test methods specified in paragraphs (a)(1) through (6) of this section, except where another section of this subpart requires either the use of a specific test method or the use of requirements in another subpart containing specific test method requirements.

(1) Method 1 or 1A, 40 CFR part 60, appendix A, shall be used for selection of the sampling sites if the flow measuring device is a pitot tube, except that references to particulate matter in Method 1A do not apply for the purposes of this subpart. No traverse is necessary when Method 2A or 2D, 40 CFR part 60, appendix A is used to determine gas stream volumetric flow rate.

(2) Method 2, 2A, 2C, or 2D, 40 CFR part 60, appendix A, is used for velocity and volumetric flow rates.

(3) Method 3, 40 CFR part 60, appendix A, is used for gas analysis.

(4) Method 4, 40 CFR part 60, appendix A, is used for stack gas moisture.

(5) The following methods shall be used to determine the organic HAP concentration.

(i) Method 316 or Method 320, 40 CFR part 60, appendix A, shall be used to determine the concentration of formaldehyde.

(ii) Method 18, 40 CFR part 60, appendix A, shall be used to determine the concentration of all organic HAP other than formaldehyde.

(iii) Method 308, 40 CFR part 60, appendix A, may be used as an alternative to Method 18 to determine the concentration of methanol.

(6) When complying with the alternative standard, as specified in §63.1413(f), the owner or operator shall use a Fourier Transform Infrared Spectroscopy (FTIR) instrument following Method PS–15, 40 CFR part 60, appendix B.

(b) *Batch process vent performance testing procedures.*

(1) *Average batch vent flow rate determination.* The average batch vent flow rate for a batch emission episode shall be calculated using Equation 1 of this section:

$$AFR_{episode} = \frac{\sum_{i=1}^{n} FR_i}{n} \qquad \text{[Eq. 1]}$$

Where:

$AFR_{episode}$=Average batch vent flow rate for the batch emission episode, scmm.

FR_i=Volumetric flow rate for individual measurement i, taken every 15 minutes using the procedures in paragraph (a)(2) of this section, scmm.

n=Number of flow rate measurements taken during the batch emission episode.

(2) *Average batch vent concentration determination using an integrated sample.* If an integrated sample is taken over the entire batch emission episode to determine the average batch vent concentration of total organic HAP, organic HAP emissions shall be calculated using Equation 2 of this section:

$$E_{episode} = K\left[\sum_{j=1}^{n}\left(C_j\right)\left(M_j\right)\right]AFR\left(T_h\right) \qquad \text{[Eq. 2]}$$

Where:

$E_{episode}$ = Emissions, kg/episode.

K=Constant, 2.494×10^{-6} $(ppmv)^{-1}$ (gm-mole/scm) (kg/gm) (min/hr), where standard temperature is 20 °C.

C_j=Average batch vent concentration of sample organic HAP component j of the gas stream, dry basis, ppmv.

M_j=Molecular weight of sample organic HAP component j of the gas stream, gm/gm-mole.

AFR=Average batch vent flow rate of gas stream, dry basis, scmm.

T_h=Hours/episode.

n=Number of organic HAP in stream.

(3) *Average batch vent concentration determination using grab samples.* If grab samples are taken to determine the average batch vent concentration of total organic HAP, organic HAP emissions shall be calculated as follows:

(i) For each measurement point, the emission rate shall be calculated using Equation 3 of this section:

$$Epoint = K\left[\sum_{j=1}^{n} C_j M_j\right]FR \qquad \text{[Eq. 3]}$$

Where:

E_{point}=Emission rate for individual measurement point, kg/hr.

K=Constant, 2.494×10^{-6} $(ppmv)^{-1}$ (gm-mole/scm) (kg/gm) (min/hr), where standard temperature is 20 °C.

C_j=Concentration of sample organic HAP component j of the gas stream, dry basis, ppmv.

M_j=Molecular weight of sample organic HAP component j of the gas stream, gm/gm-mole.

FR=Flow rate of gas stream for the measurement point, dry basis, scmm.

n=Number of organic HAP in stream.

(ii) The organic HAP emissions per batch emission episode shall be calculated using Equation 4 of this section:

$$E_{episode} = (DUR)\left[\sum_{i=1}^{n} \frac{E_i}{n}\right] \qquad \text{[Eq. 4]}$$

Where:

$_{episode}$=Emissions, kg/episode.
DUR=Duration of the batch emission episode, hr/episode.
E_i=Emissions for measurement point i, kg/hr.
n=Number of measurements.

(4) *Control device efficiency determination for a batch emission episode.* The control efficiency for the control device shall be calculated using Equation 5 of this section:

$$R = \frac{\sum_{i=1}^{n} E_{inlet,i} - \sum_{i=1}^{n} E_{outlet,i}}{\sum_{i=1}^{n} E_{inlet,i}}(100) \qquad \text{[Eq. 5]}$$

Where:

R=Control efficiency of control device, percent.
E_{inlet}=Mass rate of total organic HAP for batch emission episode i at the inlet to the control device as calculated under paragraph (b)(2) or (b)(3) of this section, kg/episode.
E_{outlet}=Mass rate of total organic HAP for batch emission episode i at the outlet of the control device, as calculated under paragraph (b)(2) or (b)(3) of this section, kg/episode.
n=Number of batch emission episodes in the batch cycle selected to be controlled.

(c) *Percent oxygen correction for combustion control devices.* If the control device is a combustion device, total organic HAP concentrations shall be corrected to 3 percent oxygen when supplemental combustion air is used to combust the emissions. The integrated sampling and analysis procedures of Method 3B, 40 CFR part 60, appendix A, shall be used to determine the actual oxygen concentration ($\%0_{20}$). The samples shall be taken during the same time that the total organic HAP samples are taken. The concentration corrected to 3 percent oxygen (C_c) shall be computed using Equation 6 of this section:

$$C_c = C_m\left(\frac{17.9}{20.9 - \%O_{2d}}\right) \qquad \text{[Eq. 6]}$$

Where:

C_c=Concentration of total organic HAP corrected to 3 percent oxygen, dry basis, ppmv.
C_m=Total concentration of TOC in vented gas stream, average of samples, dry basis, ppmv.
$\%0_{2d}$=Concentration of oxygen measured in vented gas stream, dry basis, percent by volume.

(d) *Uncontrolled organic HAP emissions.* Uncontrolled organic HAP emissions for individual reactor batch process vents or individual non-reactor batch process vents shall be determined using the procedures specified in paragraphs (d)(1) through (8) of this section. To estimate organic HAP emissions from a batch emissions episode, owners or operators may use either the emissions estimation equations in paragraphs (d)(1) through (4) of this section, or direct measurement as specified in paragraph (d)(5) of this section. Engineering assessment may be used to estimate organic HAP emissions from a batch emission episode only under the conditions described in paragraph (d)(6) of this section. In using the emissions estimation equations in paragraphs (d)(1) through (4) of this section, individual component vapor pressure and molecular weight may be obtained from standard references. Methods to determine individual HAP partial pressures in multicomponent systems are described in paragraph (d)(9) of this section. Other variables in the emissions estimation equations may be obtained through direct measurement, as defined in paragraph (d)(5) of this section; through engineering assessment, as defined in paragraph (d)(6)(ii) of this section; by process knowledge; or by any other appropriate means. Assumptions used in determining these variables shall be documented as specified in § 63.1417. Once organic HAP emissions for the batch emission episode have been determined using either the emissions estimation equations, direct measurement, or engineering assessment, organic HAP emissions from a single batch cycle shall be calculated in accordance with paragraph (d)(7) of this section, and annual organic HAP emissions from the batch process vent shall be calculated in accordance with paragraph (d)(8) of this section.

(1) *Emissions from purging of empty vessels.* Organic HAP emissions from the purging of an empty vessel shall be calculated using Equation 7 of this section. Equation 7 of this section does

not take into account evaporation of any residual liquid in the vessel:

$$E_{episode} = \frac{(V_{ves})(P)(MW_{wavg})}{RT}(1 - 0.37^{m}) \qquad \text{[Eq. 7]}$$

Where:
$E_{episode}$=Emissions, kg/episode.
V_{ves}=Volume of vessel, m^3.
P=Total organic HAP partial pressure, kPa.
MW_{wavg}=Weighted average molecular weight of organic HAP in vapor, determined in accordance with paragraph (d)(4)(i)(D) of this section, kg/kmol.
R=Ideal gas constant, 8.314 $m^3 \cdot kPa/kmol \cdot K$.
T=Temperature of vessel vapor space, K.
m=Number of volumes of purge gas used.

(2) *Emissions from purging of filled vessels*. Organic HAP emissions from the purging of a filled vessel shall be calculated using Equation 8 of this section:

$$E_{episode} = \frac{(y)(V_{dr})(P^2)(MW_{wavg})}{RT\left(P - \sum_{i=1}^{n} P_i x_i\right)}(T_m) \qquad \text{[Eq. 8]}$$

Where:
$E_{episode}$=Emissions, kg/episode.
y=Saturated mole fraction of all organic HAP in vapor phase.
V_{dr}=Volumetric gas displacement rate, m^3/min.
P=Pressure in vessel vapor space, kPa.
MW_{wavg}=Weighted average molecular weight of organic HAP in vapor, determined in accordance with paragraph (d)(4)(i)(D) of this section, kg/kmol.
R=Ideal gas constant, 8.314 $m^3 \cdot kPa/kmol \cdot K$.
T=Temperature of vessel vapor space, K.
P_i=Vapor pressure of individual organic HAP i, kPa.
x_i=Mole fraction of organic HAP i in the liquid.
n=Number of organic HAP in stream.
T_m=Minutes/episode.

(3) *Emissions from vapor displacement*. Organic HAP emissions from vapor displacement due to transfer of material into or out of a vessel shall be calculated using Equation 9 of this section:

$$E_{episode} = \frac{(y)(V)(P)(MW_{wavg})}{RT} \qquad \text{[Eq. 9]}$$

Where:
$E_{episode}$=Emissions, kg/episode.
y=Saturated mole fraction of all organic HAP in vapor phase.
V=Volume of gas displaced from the vessel, m^3.
P=Pressure in vessel vapor space, kPa.
MW_{wavg}=Weighted average molecular weight of organic HAP in vapor, determined in accordance with paragraph (d)(4)(i)(D) of this section, kg/kmol.
R=Ideal gas constant, 8.314 $m^3 \cdot kPa/kmol \cdot K$.
T=Temperature of vessel vapor space, K.

(4) *Emissions from heating of vessels*. Organic HAP emissions caused by the heating of a vessel shall be calculated using the procedures in either paragraph (d)(4)(i),(ii), or (iii) of this section, as appropriate.

(i) If the final temperature to which the vessel contents is heated is lower than 50 K below the boiling point of the HAP in the vessel, then organic HAP emissions shall be calculated using the equations in paragraphs (d)(4)(i)(A) through (D) of this section.

(A) Organic HAP emissions caused by heating of a vessel shall be calculated using Equation 10 of this section. The assumptions made for this calculation are atmospheric pressure of 760 millimeters of mercury (mm Hg) and the displaced gas is always saturated with volatile organic compounds (VOC) vapor in equilibrium with the liquid mixture:

$$E_{episode} = \left[\frac{\dfrac{\sum_{i=1}^{n}(P_i)T1}{101.325 - \sum_{i=1}^{n}(P_i)T1} + \dfrac{\sum_{i=1}^{n}(P_i)T2}{101.325 - \sum_{i=1}^{n}(P_i)T2}}{2} \right] * (\Delta\eta)\left[\frac{\left(MW_{wavg,T1} + MW_{wavg,T2}\right)}{2}\right] \qquad \text{[Eq. 10]}$$

Where:

$E_{episode}$=Emissions, kg/episode.

$(P_i)_{T1}$, $(P_i)_{T2}$=Partial pressure (kPa) of each organic HAP i in the vessel headspace at initial (T1) and final (T2) temperature.

n=Number of organic HAP in stream.

$\Delta\eta$=Number of kilogram-moles (kg-moles) of gas displaced, determined in accordance with paragraph (d)(4)(i)(B) of this section.

101.325=Constant, kPa.

$(MW_{WAVG,T1})$, $(MW_{WAVG,T2})$=Weighted average molecular weight of total organic HAP in the displaced gas stream, determined in accordance with paragraph (d)(4)(i)(D) of this section, kg/kmol.

(B) The moles of gas displaced, Δ, is calculated using Equation 11 of this section:

$$\Delta\eta = \frac{V_{fs}}{R}\left[\left(\frac{Pa_1}{T_1}\right) - \left(\frac{Pa_2}{T_2}\right)\right] \qquad \text{[Eq. 11]}$$

Where:

$\Delta\eta$=Number of kg-moles of gas displaced.

V_{fs}=Volume of free space in the vessel, m^3.

R=Ideal gas constant, 8.314 $m^3 \cdot kPa/kmol \cdot K$.

Pa_1=Initial noncondensible gas partial pressure in the vessel, kPa.

Pa_2=Final noncondensible gas partial pressure in the vessel, kPa.

T_1=Initial temperature of vessel, K.

T_2=Final temperature of vessel, K.

(C) The initial and final pressure of the noncondensible gas in the vessel shall be calculated using Equation 12 of this section:

$$Pa = 101.325 - \sum_{i=1}^{n}(P_i)T \qquad \text{[Eq. 12]}$$

Where:

Pa=Initial or final partial pressure of noncondensible gas in the vessel headspace, kPa.

101.325=Constant, kPa.

$(P_i)_T$=Partial pressure of each organic HAP i in the vessel headspace, kPa, at the initial or final temperature (T1 or T2).

n=Number of organic HAP in stream.

(D) The weighted average molecular weight of organic HAP in the displaced gas, MW_{wavg}, shall be calculated using Equation 13 of this section:

$$MW_{wavg} = \frac{\sum_{i=1}^{n}(\text{mass of C})_i(\text{molecular weight of C})_i}{\sum_{i=1}^{n}(\text{mass of C})_i} \qquad \text{[Eq. 13]}$$

Where:

C=Organic HAP component

n=Number of organic HAP components in stream.

(ii) If the vessel contents are heated to a temperature greater than 50 K below the boiling point, then organic HAP emissions from the heating of a vessel shall be calculated as the sum of the organic HAP emissions calculated in accordance with paragraphs (d)(4)(ii)(A) and (B) of this section.

(A) For the interval from the initial temperature to the temperature 50 K below the boiling point, organic HAP emissions shall be calculated using Equation 10 of this section, where T_2 is the temperature 50 K below the boiling point.

(B) For the interval from the temperature 50 K below the boiling point to the final temperature, organic HAP emissions shall be calculated as the summation of emissions for each 5 K increment, where the emissions for each increment shall be calculated using Equation 10 of this section.

(*1*) If the final temperature of the heatup is at or lower than 5 K below the boiling point, the final temperature for the last increment shall be the final temperature for the heatup, even if the last increment is less than 5 K.

(*2*) If the final temperature of the heatup is higher than 5 K below the boiling point, the final temperature for the last increment shall be the temperature 5 K below the boiling point, even if the last increment is less than 5 K.

(*3*) If the vessel contents are heated to the boiling point and the vessel is not operating with a condenser, the final temperature for the final increment shall be the temperature 5 K below the boiling point, even if the last increment is less than 5 K.

(iii) If the vessel is operating with a condenser, and the vessel contents are heated to the boiling point, the process condenser, as defined in §63.1402, is considered part of the process. Organic HAP emissions shall be calculated as the sum of emissions calculated using Equation 10 of this section, which calculates organic HAP emissions due to heating the vessel contents to the temperature of the gas exiting the condenser, and emissions calculated using Equation 9 of this section, which calculates emissions due to the displacement of the remaining saturated noncondensible gas in the vessel. The final temperature in Equation 10 of this section shall be set equal to the exit gas temperature of the condenser. Equation 9 of this section shall be used as written below in Equation 14 of this section, using free space volume, and T is set equal to the condenser exit gas temperature:

$$E_{episode} = \frac{(y)(V_{fs})(P)(MW_{wavg})}{RT} \quad \text{[Eq. 14]}$$

Where:

$E_{episode}$=Emissions, kg/episode.

y=Saturated mole fraction of all organic HAP in vapor phase.

V_{fs}=Volume of the free space in the vessel, m^3.

P=Pressure in vessel vapor space, kPa.

MW_{wavg}=Weighted average molecular weight of organic HAP in vapor, determined in accordance with paragraph (d)(4)(i)(D) of this section, kg/kmol.

R=Ideal gas constant, 8.314 $m^3 \cdot kPa/kmol \cdot K$.

T=Temperature of condenser exit stream, K.

(5) *Emissions determined by direct measurement*. The owner or operator may estimate annual organic HAP emissions for a batch emission episode by direct measurement. The test methods and procedures specified in paragraphs (a) and (b) of this section shall be used for direct measurement. If direct measurement is used, the owner or operator shall perform a test for the duration of a representative batch emission episode. Alternatively, the owner or operator may perform a test during only those periods of the batch emission episode for which the emission rate for the entire episode can be determined or for which the emissions are greater than the average emission rate of the batch emission episode. The owner or operator choosing either of these options shall develop an emission profile illustrating the emission rate (kilogram per unit time) over the entire batch emission episode, based on either process knowledge or test data, to demonstrate that test periods are representative. Examples of information that could constitute process knowledge include calculations based on material balances and process stoichiometry. Previous test results may be used

to develop the emission profile provided the results are still relevant to the current batch process vent conditions. The emission profile shall be included in the site-specific test plan required by § 63.1417(h)(2).

(6) *Emissions determined by engineering assessment.* To use engineering assessment to estimate organic HAP emissions from a batch emission episode, owners or operators shall comply with paragraphs (d)(6)(i) through (iii) of this section.

(i) If the criteria specified in paragraphs (d)(6)(i)(A), (B), and (C) of this section are met for a specific batch emission episode, the owner or operator may use engineering assessment to estimate organic HAP emissions from that batch emission episode.

(A) Previous test data, where the measurement of organic HAP emissions was an outcome of the test, that show a greater than 20 percent discrepancy between the test value and the value estimated using the applicable equations in paragraphs (d)(1) through (4) of this section. Paragraphs (d)(6)(i)(A)(*1*) and (*2*) of this section describe test data that will be acceptable under this paragraph.

(*1*) Test data for the batch emission episode obtained during production of the product for which the demonstration is being made.

(*2*) Test data obtained for a batch emission episode from another process train where the test data were obtained during production of the product for which the demonstration is being made. Test data from another process train may be used only if the owner or operator can demonstrate that the data are representative of the batch emission episode for which the demonstration is being made, taking into account the nature, size, operating conditions, production rate, and sequence of process steps (*e.g.*, reaction, distillation, etc.) of the equipment in the other process train.

(B) Previous test data for the batch emission episode with the highest organic HAP emissions on a mass basis where the measurement of organic HAP emissions was an outcome of the test, where data were obtained during the production of the product for which the demonstration is being made, and where the data show a greater than 20 percent discrepancy between the test value and the value estimated using the applicable equations in paragraphs (d)(1) through (4) of this section. If the criteria in this paragraph are met, then engineering assessment may be used for all batch emission episodes associated with that batch cycle for the batch unit operation.

(C) The owner or operator has requested and been granted approval to use engineering assessment to estimate organic HAP emissions from a batch emissions episode. The request to use engineering assessment to estimate organic HAP emissions from a batch emissions episode shall contain sufficient information and data to demonstrate to the Administrator that engineering assessment is an accurate means of estimating organic HAP emissions for that particular batch emissions episode. The request to use engineering assessment to estimate organic HAP emissions for a batch emissions episode shall be submitted in the Precompliance Report, as required by § 63.1417(d).

(ii) Engineering assessment includes, but is not limited to, the following:

(A) Previous test results, provided the tests are representative of current operating practices;

(B) Bench-scale or pilot-scale test data obtained under conditions representative of current process operating conditions;

(C) Flow rate or organic HAP emission rate specified or implied within a permit limit applicable to the batch process vent; and

(D) Design analysis based on accepted chemical engineering principles, measurable process parameters, or physical or chemical laws or properties. Examples of analytical methods include, but are not limited to:

(*1*) Use of material balances;

(*2*) Estimation of flow rate based on physical equipment design such as pump or blower capacities;

(*3*) Estimation of organic HAP concentrations based on saturation conditions; and

(*4*) Estimation of organic HAP concentrations based on grab samples of the liquid or vapor.

(iii) Data or other information used to demonstrate that the criteria in paragraph (d)(6)(i) of this section have been met shall be reported as specified in paragraphs (d)(6)(iii)(A) and (B) of this section.

(A) Data or other information used to demonstrate that the criteria in paragraphs (d)(6)(i)(A) and (B) of this section have been met shall be reported in the Notification of Compliance Status, as required by §63.1417(e)(9).

(B) The request for approval to use engineering assessment to estimate organic HAP emissions from a batch emissions episode as allowed under paragraph (d)(6)(i)(C) of this section, and sufficient data or other information for demonstrating to the Administrator that engineering assessment is an accurate means of estimating organic HAP emissions for that particular batch emissions episode shall be submitted with the Precompliance Report, as required by §63.1417(d).

(7) *Emissions for a single batch cycle.* For each batch process vent, the organic HAP emissions associated with a single batch cycle shall be calculated using Equation 15 of this section:

Where:

$$E_{cycle} = \sum_{i=1}^{n} E_{episode_i} \qquad \text{[Eq. 15]}$$

E_{cycle}=Emissions for an individual batch cycle, kg/batch cycle.

$E_{episodei}$=Emissions from batch emission episode i, kg/episode.

n=Number of batch emission episodes for the batch cycle.

(8) *Annual emissions from a batch process vent.* Annual organic HAP emissions from a batch process vent shall be calculated using Equation 16 of this section:

$$AE = \sum_{i=1}^{n} \left(N_i\right)\left(E_{cycle_i}\right) \qquad \text{[Eq. 16]}$$

Where:

AE=Annual emissions from a batch process vent, kg/yr.

N_i=Number of type i batch cycles performed annually, cycles/year.

E_{cyclei}=Emissions from the batch process vent associated with a single type i batch cycle, as determined in paragraph (d)(7) of this section, kg/batch cycle.

n=Number of different types of batch cycles that cause the emission of organic HAP from the batch process vent.

(9) *Partial pressures in multicomponent systems.* Individual HAP partial pressures in multicomponent systems shall be determined using the appropriate method specified in paragraphs (d)(9)(i) through (iii) of this section.

(i) If the components are miscible, use Raoult's law to calculate the partial pressures;

(ii) If the solution is a dilute aqueous mixture, use Henry's law constants to calculate partial pressures;

(iii) If Raoult's law or Henry's law is not appropriate or available, the owner or operator may use any of the options in paragraph (d)(9)(iii)(A), (B), or (C) of this section.

(A) Experimentally obtained activity coefficients, Henry's law constants, or solubility data;

(B) Models, such as group-contribution models, to predict activity coefficients; or

(C) Assume the components of the system behave independently and use the summation of all vapor pressures from the HAPs as the total HAP partial pressure.

§63.1415 Monitoring requirements.

(a) *General requirements.* Each owner or operator of an emission point located at an affected source that uses a control device to comply with the requirements of this subpart and has one or more parameter monitoring level requirement specified under this subpart, shall install the monitoring equipment specified in paragraph (b) of this section in order to demonstrate continued compliance with the provisions of this subpart. All monitoring equipment shall be installed, calibrated, maintained, and operated according to manufacturer's specifications or other written procedures that provide adequate assurance that the equipment would reasonably be expected to monitor accurately.

(1) This monitoring equipment shall be in operation at all times when organic HAP emissions that are required to be controlled as part of complying with the emission limits specified in §§63.1404, 63.1405, 63.1406, 63.1407, and 63.1408 are vented to the control device.

(2) For control devices controlling less than 1 ton per year of uncontrolled organic HAP emissions, monitoring shall consist of a daily verification that the control device is operating properly. If the control device is used to control batch process vents alone or in combination with other emission points, the verification may be on a per batch cycle basis. This verification shall include, but not be limited to, a daily or per batch demonstration that the control device is working as designed. The procedure for this demonstration shall be submitted for review and approval as part of the Precompliance Report, as required by § 63.1417(d)(10).

(3) Nothing in this section shall be construed to allow a monitoring parameter excursion caused by an activity that violates other applicable provisions of subpart A, F, or G of this part.

(b) *Monitoring equipment*. The monitoring equipment specified in paragraphs (b)(1) through (8) of this section shall be installed as specified in paragraph (a) of this section. The parameters to be monitored are specified in Table 3 of this subpart.

(1) Where a scrubber is used, the following monitoring equipment is required.

(i) A pH monitoring device equipped with a continuous recorder to monitor the pH of the scrubber effluent.

(ii) A flow measurement device equipped with a continuous recorder shall be located at the scrubber influent for liquid flow. Gas stream flow shall be determined using one of the following procedures:

(A) The owner or operator may determine gas stream flow using the design blower capacity with appropriate adjustments for pressure drop.

(B) If the scrubber is subject to regulations in 40 CFR parts 264 through 266 that required a determination of the liquid to gas (L/G) ratio prior to the applicable compliance date for this subpart, the owner or operator may determine gas stream flow by the method that had been utilized to comply with those regulations. A determination that was conducted prior to the compliance date for this subpart may be utilized to comply with this subpart if it is still representative.

(C) The owner or operator may prepare and implement a gas stream flow determination plan that documents an appropriate method which will be used to determine the gas stream flow. The plan shall require determination of gas stream flow by a method which will at least provide a value for either a representative or the highest gas stream flow anticipated in the scrubber during representative operating conditions other than start-ups, shutdowns, or malfunctions. The plan shall include a description of the methodology to be followed and an explanation of how the selected methodology will reliably determine the gas stream flow, and a description of the records that will be maintained to document the determination of gas stream flow. The owner or operator shall maintain the plan as specified in § 63.1416(a).

(2) Where an absorber is used, a scrubbing liquid temperature monitoring device and a specific gravity monitoring device are required, each equipped with a continuous recorder.

(3) Where a condenser is used, a condenser exit temperature (product side) monitoring device equipped with a continuous recorder is required.

(4) Where a carbon adsorber is used, an integrating regeneration steam flow or nitrogen flow, or pressure monitoring device having an accuracy of ±10 percent of the flow rate, level, or pressure, or better, capable of recording the total regeneration steam flow or nitrogen flow, or pressure (gauge or absolute) for each regeneration cycle; and a carbon bed temperature monitoring device, capable of recording the carbon bed temperature after each regeneration and within 15 minutes of completing any cooling cycle are required.

(5) Where an incinerator is used, a temperature monitoring device equipped with a continuous recorder is required.

(i) Where an incinerator other than a catalytic incinerator is used, the temperature monitoring device shall be installed in the firebox or in the ductwork immediately downstream of the firebox in a position before any substantial heat exchange occurs.

(ii) Where a catalytic incinerator is used, temperature monitoring devices shall be installed in the gas stream immediately before and after the catalyst bed.

(6) Where a flare is used, a device (including but not limited to a thermocouple, ultra-violet beam sensor, or infrared sensor) capable of continuously detecting the presence of a pilot flame is required.

(7) Where a boiler or process heater of less than 44 megawatts design heat input capacity is used, a temperature monitoring device in the firebox equipped with a continuous recorder is required. Any boiler or process heater in which all vent streams are introduced with the primary fuel or are used as the primary fuel is exempt from this requirement.

(8) As an alternate to paragraphs (b)(1) through (7) of this section, the owner or operator may install an organic monitoring device equipped with a continuous recorder. Said organic monitoring device shall meet the requirements of Performance Specification 8 or 9 of 40 CFR part 60, appendix B, and shall be installed, calibrated, and maintained according to §63.6.

(c) *Alternative monitoring parameters.* An owner or operator may request approval to monitor parameters other than those specified in Table 3 of this subpart. The request shall be submitted according to the procedures specified in §63.1417(j). Approval shall be requested if the owner or operator:

(1) Uses a control device or control technology other than those included in paragraph (b) of this section; or

(2) Uses one of the control devices included in paragraph (b) of this section, but seeks to monitor a parameter other than those specified in Table 3 of this subpart.

(d) *Monitoring of bypass lines.* Owners or operators using a vent system that contains bypass lines that could divert emissions away from a control device or control technology used to comply with the provisions of this subpart shall comply with either paragraph (d)(1) or (2) of this section. Equipment such as low leg drains, high point bleeds, analyzer vents, open-ended valves or lines, and pressure relief valves needed for safety purposes are not subject to this paragraph.

(1) Properly install, maintain, and operate a flow indicator that takes a reading at least once every 15 minutes. Records shall be generated as specified in §63.1416(d)(3). The flow indicator shall be installed at the entrance to any bypass line that could divert emissions away from the control device or control technology and to the atmosphere; or

(2) Secure the bypass line damper or valve in the non-diverting position with a car-seal or a lock-and-key type configuration. A visual inspection of the seal or closure mechanism shall be performed at least once every month to ensure that the damper or valve is maintained in the non-diverting position and emissions are not diverted through the bypass line. Records shall be generated as specified in §63.1416(d)(3).

(e) *Monitoring for the alternative standards.* For control devices that are used to comply with the provisions of §§63.1404(b), 63.1405(b), 63.1406(b), 63.1407(b), or 63.1408(b) the owner or operator shall conduct continuous monitoring of the outlet organic HAP concentration whenever emissions are vented to the control device. Continuous monitoring of outlet organic HAP concentration shall be accomplished using an FTIR instrument following Method PS–15 of 40 CFR part 60, appendix B. The owner or operator shall calculate a daily average outlet organic HAP concentration.

§63.1416 Recordkeeping requirements.

(a) *Data retention.* Unless otherwise specified in this subpart, each owner or operator of an affected source shall keep copies of all applicable records and reports required by this subpart for at least 5 years, as specified in paragraph (a)(1) of this section, with the exception listed in paragraph (a)(2) of this section.

(1) All applicable records shall be maintained in such a manner that they can be readily accessed. The most recent 6 months of records shall be retained on site or shall be accessible from a central location by computer or

other means that provides access within 2 hours after a request. The remaining 4 and one-half years of records may be retained offsite. Records may be maintained in hard copy or computer-readable form including, but not limited to, on paper, microfilm, computer, floppy disk, CD–ROM, optical disc, magnetic tape, or microfiche.

(2) If an owner or operator submits copies of reports to the appropriate EPA Regional Office, the owner or operator is not required to maintain copies of reports. If the EPA Regional Office has waived the requirement of § 63.10(a)(4)(ii) for submittal of copies of reports, the owner or operator is not required to maintain copies of those reports.

(b) *Start-up, shutdown, and malfunction plan and records.* The owner or operator of an affected source shall develop and implement a start-up, shutdown, and malfunction plan as specified in § 63.6(e)(3) and shall keep the plan on-site. Records shall be kept as specified in paragraphs (b)(1) and (2) of this section. Records are not required for emission points that do not require control under this subpart.

(1) Records of the occurrence and duration of each start-up, shutdown, and malfunction of operation of process equipment, or control devices, or recovery devices, or continuous monitoring systems, or control technologies used to comply with this subpart during which excess emissions (as defined in § 63.1400(k)(4)) occur.

(2) For each start-up, shutdown, or malfunction during which excess emissions (as defined in § 63.1400(k)(4)) occur, records reflecting whether the procedures specified in the affected source's start-up, shutdown, and malfunction plan were followed and documentation of actions taken that are not consistent with the plan. For example, if a start-up, shutdown, and malfunction plan includes procedures for routing a control device to a backup control device (e.g., a halogenated stream could be routed to a flare during periods when the primary control device is out of service), records shall be kept of whether the plan was followed. These records may take the form of a ''checklist'' or other form of recordkeeping that confirms conformance with the start-up, shutdown, and malfunction plan for the event.

(c) *Monitoring records.* Owners or operators required to comply with § 63.1415 and, therefore, required to keep continuous records shall keep records as specified in paragraphs (c)(1) through (6) of this section.

(1) The owner or operator shall record either each measured data value or average values for 1 hour or shorter periods calculated from all measured data values during each period. If values are measured more frequently than once per minute, a single value for each minute may be used to calculate the hourly (or shorter period) average instead of all measured values. Owners or operators of batch process vents shall record each measured data value; if values are measured more frequently than once per minute, a single value for each minute may be recorded instead of all measured values.

(2) Daily average, batch cycle daily average, or block average values of each continuously monitored parameter shall be calculated for each operating day as specified in paragraphs (c)(2)(i) and (ii) of this section, except as specified in paragraphs (c)(3) and (4) of this section. The option of conducting parameter monitoring for batch process vents on a batch cycle daily average basis or a block average basis is described in paragraph (d)(2) of this section.

(i) The daily average value, batch cycle daily average, or block average shall be calculated as the average of all parameter values recorded during the operating day, or batch cycle, as appropriate, except as specified in paragraph (c)(4) of this section. For batch process vents, only parameter values recorded during those batch emission episodes, or portions thereof, in the batch cycle that the owner or operator has selected to control in order to comply shall be used to calculate the average. The calculated average shall cover a 24-hour period if operation is continuous, or the number of hours of operation per operating day if operation is not continuous for daily average values or batch cycle daily average values. The calculated average shall cover the entire period of the batch cycle for block

average values. As specified in §63.1413(a)(4)(i)(C)(*3*), the owner or operator shall provide the information needed to calculate batch cycle daily averages for operating days that include partial batch cycles.

(ii) The operating day shall be the period the owner or operator specifies in the operating permit or the Notification of Compliance Status for purposes of determining daily average values or batch cycle daily average values of monitored parameters. The block shall be the entire period of the batch cycle, as specified by the owner or operator in the operating permit or the Notification of Compliance Status for purposes of determining block average values of monitored parameters.

(3) If all recorded values for a monitored parameter during an operating day or block are above the minimum level or below the maximum level established in the Notification of Compliance Status or operating permit, the owner or operator may record that all values were above the minimum level or below the maximum level rather than calculating and recording a daily average, or block average, for that operating day. For these operating days or blocks, the records required in paragraph (c)(1) of this section shall also be retained for 5 years.

(4) Monitoring data recorded during periods identified in paragraphs (c)(4)(i) through (v) of this section shall not be included in any average computed under this subpart. Records shall be kept of the times and durations of all such periods and any other periods during process or control device or recovery device or control technology operation when monitors are not operating:

(i) Monitoring system breakdowns, repairs, calibration checks, and zero (low-level) and high-level adjustments;

(ii) Start-ups;

(iii) Shutdowns;

(iv) Malfunctions; and

(v) Periods of non-operation of the affected source (or portion thereof) resulting in cessation of the emissions to which the monitoring applies.

(5) The owner or operator who has received approval to monitor different parameters, under §63.1417(j) as allowed under §63.1415(e), than those specified for storage vessels, continuous process vents, or batch process vents shall retain for a period of 5 years each record specified in their approved Alternative Monitoring Parameters request.

(6) The owner or operator who has received approval to use alternative continuous monitoring and recordkeeping provisions as specified in §63.1417(k) shall retain for a period of 5 years each record specified in their approved Alternative Continuous Monitoring request.

(d) *Batch process vent records.* (1) *Compliance demonstration records.* Each owner or operator of a batch process vent complying with §63.1406 or §63.1407 shall keep the following records, as applicable, readily accessible.

(i) If a batch process vent is seeking to demonstrate compliance with the alternative standard specified in §63.1406(b) or §63.1407(b), results of the initial compliance demonstration specified in §63.1413(f).

(ii) If a batch process vent is seeking to demonstrate compliance with the percent reduction requirements of §63.1406(a)(1)(ii) or §63.1407(a)(2)(ii), records documenting the batch cycle percent reduction or overall percent reduction, as appropriate, as specified in §63.1413(e)(1)(iii).

(iii) When using a flare to comply with §63.1406(a)(1)(i) or §63.1407(a)(2)(i):

(A) The flare design (i.e., steam-assisted, air-assisted or non-assisted);

(B) All visible emission readings, heat content determinations, flow rate measurements, and exit velocity determinations made during the compliance determination required by §63.1413(g); and

(C) Periods when all pilot flames were absent during the compliance determination required by §63.1413(g).

(iv) The following information when using a control device or control technology, other than a flare, to achieve compliance with the percent reduction requirement of §63.1406(a)(1)(ii) or §63.1407(a)(2)(ii):

(A) For an incinerator, non-combustion control device, or other control technology, the percent reduction of organic HAP achieved for emissions vented to the control device or control technology, as determined using the procedures specified in §63.1413(e)(1);

(B) For a boiler or process heater, a description of the location at which the vent stream is introduced into the boiler or process heater; and

(C) For a boiler or process heater with a design heat input capacity of less than 44 megawatts and where the vent stream is not introduced with the primary fuel or used as the primary fuel, the percent reduction of organic HAP achieved for emissions vented to the control device, as determined using the procedures specified in § 63.1413(e)(1).

(v) If a batch process vent is seeking to demonstrate compliance with the mass emission limits specified in § 63.1406(a)(1)(iii) or (a)(2)(iii) or specified in § 63.1407(b)(2), the following information:

(A) Results of the initial compliance demonstration specified in § 63.1413(e)(2).

(B) The organic HAP emissions from the batch process vent associated with each single type of batch cycle ($E_{cycle\ i}$) determined as specified in § 63.1413(e)(2).

(C) The site-specific emission limit required by § 63.1413(e)(2), as appropriate.

(vi) If an owner or operator designates a condenser sometimes operated as a process condenser as a control device, comply with either paragraph (d)(1)(vi)(A) or (B) of this section.

(A) Retain information, data, analyses to document inprocess recycling of the material recovered when the condenser is operating as a control device.

(B) When requested by the Administrator, demonstrate that material recovered by the condenser operating as a control device is reused in a manner meeting the definition of inprocess recycling.

(2) *Establishment of parameter monitoring level records.* For each parameter monitored according to § 63.1415(b) and Table 3 of this subpart, or for alternate parameters and/or parameters for alternate control devices or control technologies monitored according to § 63.1417(j) as allowed under § 63.1415(e), maintain documentation showing the establishment of the level that indicates proper operation of the control device or control technology as required by § 63.1415(c) for parameters specified in § 63.1415(b) and as required by § 63.1417(j) for alternate parameters. An owner or operator may choose to monitor operating parameters for batch process vents on a batch cycle daily average basis or on a block average basis. The batch cycle daily average is based on parameter monitoring accomplished during the operating day (i.e., a 24-hour basis). The block average is based on the parameter monitoring accomplished during a single batch cycle. As defined in § 63.1402, the block shall be the period of time equal to a single batch cycle. Monitored parameter documentation shall include the following:

(i) Parameter monitoring data used to establish the level.

(ii) Identification that the parameter monitoring level is associated with a batch cycle daily average or a block average.

(iii) A definition of the batch cycle or block, as appropriate.

(3) *Controlled batch process vent continuous compliance records.* Continuous compliance records shall be kept as follows:

(i) Each owner or operator of a batch process vent that uses a control device or control technology to comply with the percent reduction requirements of § 63.1406(a)(1)(ii) or § 63.1407(a)(2)(ii) shall keep the following records, as applicable, readily accessible:

(A) Continuous records of the equipment operating parameters specified to be monitored under § 63.1415(b) as applicable, and listed in Table 3 of this subpart, or specified by the Administrator in accordance with § 63.1417(f) as allowed under § 63.1415(e). Said records shall be kept as specified under paragraph (c) of this section, except as follows:

(*1*) For carbon adsorbers, the records specified in Table 3 of this subpart shall be maintained in place of continuous records.

(*2*) For flares, the records specified in Table 4 of this subpart shall be maintained in place of continuous records.

(B) Records of the batch cycle daily average value or block average value of

each continuously monitored parameter, as specified in paragraph (c) of this section.

(ii) Each owner or operator of a batch process vent that uses a control device or control technology to comply with §63.1406 or §63.1407 shall keep the following records, as applicable, readily accessible:

(A) Hourly records of whether the flow indicator for bypass lines specified in §63.1415(d) was operating and whether a diversion was detected at any time during the hour. Also, records of the time and duration periods when the vent is diverted from the control device or control technology or the flow indicator specified in §63.1415(d) is not operating.

(B) Where a seal or closure mechanism is used to comply with §63.1415(d), hourly records of whether a diversion was detected at any time are not required. The owner or operator shall record whether the monthly visual inspection of the seals or closure mechanisms has been done and shall record the occurrence of all periods when the seal mechanism is broken, the bypass line damper or valve position has changed, or the key for a lock-and-key type configuration has been checked out, and records of any car-seal that has broken.

(C) Records specifying the times and duration of periods of monitoring system breakdowns, repairs, calibration checks, and zero (low-level) and high-level adjustments. In addition, records specifying any other periods of process or control device operation or control technology operation when monitors are not operating.

(iii) Each owner or operator of a batch process vent seeking to demonstrate compliance with the alternative standard, as specified in §63.1406(b) or §63.1407(b), shall keep the records of continuous emissions monitoring described in §63.1416(c).

(iv) Each owner or operator of a batch process vent seeking to demonstrate compliance with the mass emission limits, specified in §63.1406(a)(1)(iii) or (a)(2)(iii), shall keep the following records, as applicable, readily accessible.

(A) The cumulative average monthly emission rate or the 12-month rolling average monthly emission rate, as appropriate.

(B) If there is a deviation from the mass emission limit, as specified in §63.1413(h), the individual monthly emission rate data points making up the cumulative average monthly emission rate or the 12-month rolling average monthly emission rate, as appropriate.

(C) If it becomes necessary to redetermine ($E_{cycle\ i}$) for a reactor batch process vent, as specified in §63.1413(e)(2), the new value(s) for ($E_{cycle\ i}$).

(D) If an owner or operator is demonstrating compliance using the procedures in §63.1413(e)(2), the monthly value of the site-specific emission limit developed under §63.1413(e)(2).

(e) *Aggregate batch vent stream records.* (1) *Compliance demonstration records.* Each owner or operator of an aggregate batch vent stream complying with §63.1408(a)(1) or (2) shall keep the following records, as applicable, readily accessible:

(i) If an aggregate batch vent stream is in compliance with the percent reduction requirements of §63.1408(a)(1)(ii) or (a)(2)(ii), owners or operators shall comply with the recordkeeping requirements for continuous process vents specified in 40 CFR part 63, subpart SS.

(ii) If an aggregate batch vent stream is in compliance with the alternative standard specified in §63.1408(b), results of the initial compliance demonstration specified in §63.1413(f).

(iii) When using a flare to comply with §63.1408(a)(1)(i) or (a)(2)(i):

(A) The flare design (i.e., steam-assisted, air-assisted or non-assisted).

(B) All visible emission readings, heat content determinations, flow rate measurements, and exit velocity determinations made during the compliance determination required by §63.1413(g).

(C) Periods when all pilot flames were absent during the compliance determination required by §63.1413(g).

(iv) If an aggregate batch vent stream is seeking to comply with the mass emission limits specified in §63.1408(b)(2), results of the initial compliance demonstration specified in §63.1413(e)(2). In addition, for each

batch process vent, the emissions associated with each single type of batch cycle ($E_{cycle\ i}$), determined as specified in § 63.1413(e)(2), shall be recorded.

(2) *Establishment of parameter monitoring level records.* For each parameter monitored according to § 63.1415(b) and Table 3 of this subpart, or for alternate parameters and/or parameters for alternate control devices monitored according to § 63.1417(j) as allowed under § 63.1415(e), maintain documentation showing the establishment of the level that indicates proper operation of the control device as required by § 63.1415(c) for parameters specified in § 63.1415(b) and as required by § 63.1417(j) for alternate parameters. Monitored parameter documentation shall include the parameter monitoring data used to establish the level.

(3) *Controlled aggregate batch vent streams continuous compliance records.* The following continuous compliance records shall be kept, as applicable:

(i) Each owner or operator of an aggregate batch vent stream that uses a control device to comply with the percent reduction requirement of § 63.1408(a)(1)(ii) or (a)(2)(ii) shall keep the following records, as applicable, readily accessible:

(A) Continuous records of the equipment operating parameters specified to be monitored under § 63.1415(b) as applicable, and listed in Table 3 of this subpart, or specified by the Administrator in accordance with § 63.1417(j) as allowed under § 63.1415(e). Records shall be kept as specified under paragraph (c) of this section, except as follows:

(*1*) For carbon adsorbers, the records specified in Table 3 of this subpart shall be maintained in place of continuous records.

(*2*) For flares, the records specified in Table 3 of this subpart shall be maintained in place of continuous records.

(B) Records of the daily average value of each continuously monitored parameter, as specified in paragraph (c) of this section.

(ii) Each owner or operator of an aggregate batch vent stream that uses a control device to comply with paragraph § 63.1408(a)(1) or (2) of this section shall keep the following records, as applicable, readily accessible:

(A) Hourly records of whether the flow indicator for bypass lines specified in § 63.1415(d) was operating and whether a diversion was detected at any time during the hour. Also, records of the times and durations of periods when the vent is diverted from the control device or the flow indicator specified in § 63.1415(d) is not operating.

(B) Where a seal or closure mechanism is used to comply with § 63.1415(d), hourly records of whether a diversion was detected at any time are not required. The owner or operator shall record whether the monthly visual inspection of the seals or closure mechanisms has been done, and shall record the occurrence of all periods when the seal mechanism is broken, the bypass line damper or valve position has changed, or the key for a lock-and-key type configuration has been checked out, and records of any car-seal that has broken.

(C) Records specifying the times and duration of periods of monitoring system breakdowns, repairs, calibration checks, and zero (low-level) and high-level adjustments. In addition, records specifying any other periods of process or control device operation when monitors are not operating.

(iii) Each owner or operator of an aggregate batch vent stream seeking to demonstrate compliance with the alternative standard, as specified in § 63.1408(b), shall keep the records of continuous emissions monitoring described in § 63.1416(c).

(iv) Each owner or operator of an aggregate batch vent stream seeking to demonstrate compliance with the mass emission limits, specified in § 63.1408(b)(2), shall keep the following records, as applicable, readily accessible:

(A) The rolling average monthly emission rate or the 12-month rolling average monthly emission rate, as appropriate.

(B) If there is a deviation from the emission limit, as specified in § 63.1413(h)(1), the individual monthly emission rate data points making up the rolling average monthly emission rate or the 12-month rolling average monthly emission rate, as appropriate.

(C) If it becomes necessary to redetermine (E_{cyclei}) for a reactor batch

process vent, as specified in §63.1413(e)(2), the new value(s) for (E_{cyclei}).

(f) *Continuous process vent records.* (1) *TRE index value records.* Each owner or operator of a continuous process vent shall maintain records of measurements, engineering assessments, and calculations performed according to the procedures of §63.1412(j) to determine the TRE index value. Documentation of engineering assessments, described in §63.1412(k), shall include all data, assumptions, and procedures used for the engineering assessments.

(2) *Volumetric flow rate records.* Each owner or operator of a continuous process vent shall record the volumetric flow rate as measured using the sampling site and volumetric flow rate determination procedures (if applicable) specified in §63.1412(b) and (f) or determined through engineering assessment as specified in §63.1412(k).

(3) *Organic HAP concentration records.* Each owner or operator shall record the organic HAP concentration as measured using the sampling site and organic HAP concentration determination procedures specified in §63.1412(b)and (e), or determined through engineering assessment as specified in §63.1412(k).

(4) *Process change records.* Each owner or operator of a continuous process vent shall keep up-to-date, readily accessible records of any process changes that change the control applicability for a continuous process vent. Records are to include any recalculation or measurement of the flow rate, organic HAP concentration, and TRE index value.

(g) *Other records or documentation.* (1) For continuous monitoring systems used to comply with this subpart, owners or operators shall keep records documenting the completion of calibration checks and records documenting the maintenance of continuous monitoring systems that are specified in the manufacturer's instructions or that are specified in other written procedures that provide adequate assurance that the equipment would reasonably be expected to monitor accurately.

(2) The owner or operator of an affected source granted a waiver under §63.10(f) shall maintain any information demonstrating whether an affected source is meeting the requirements for a waiver of recordkeeping or reporting requirements.

(3) Owners or operators using the exemption from the equipment leak provisions provided by §63.1400(f) shall comply with either paragraph (g)(3)(i) or (ii) of this section.

(i) The owner or operator shall retain information, data, and analysis used to document the basis for using the exemption provided by §63.1400(f). Such information, data, and analysis shall be retained for the 12-month period preceding December 14, 1998 and for each 12-month period the affected source is in operation and using the exemption provided by §63.1400(f). The beginning of each 12-month period shall be the anniversary of December 14, 1998.

(ii) When requested by the Administrator, the owner or operator shall demonstrate that actual annual production is equal to or less than 800 megagrams per year of amino/phenolic resin for the 12-month period preceding December 14, 1998, and for each 12-month period the affected source has been in operation and using the exemption provided by §63.1400(f). The beginning of each 12-month period shall be the anniversary of December 14, 1998.

(4) The owner or operator of a heat exchange system located at an affected source shall retain the following records:

(i) Monitoring data required by §63.1409 indicating a leak and the date when the leak was detected, and if demonstrated not to be a leak, the basis for that determination.

(ii) Records of any leaks detected by procedures subject to §63.1409(c)(2) and the date the leak was detected.

(iii) The dates of efforts to repair leaks.

(iv) The method or procedure used to confirm repair of a leak and the date repair was confirmed.

(h) *Reduced recordkeeping program.* For any parameter with respect to any item of equipment, the owner or operator may implement the recordkeeping requirements specified in paragraph (h)(1) or (2) of this section as alternatives to the provisions specified in

this subpart for storage vessels, continuous process vents, batch process vents, or aggregate batch vent streams. The owner or operator shall retain for a period of 5 years each record required by paragraph (h)(1) or (2) of this section.

(1) The owner or operator may retain only the daily average, batch cycle daily average, or block average value, and is not required to retain more frequent values, for a parameter with respect to an item of equipment, if the requirements of paragraphs (h)(1)(i) through (vi) of this section are met. An owner or operator electing to comply with the requirements of paragraph (h)(1) of this section shall notify the Administrator in the Notification of Compliance Status Report required under § 63.1417(e) or, if the Notification of Compliance Status has already been submitted, in the Periodic Report immediately preceding implementation of the requirements of this paragraph as specified in § 63.1417(f)(10).

(i) The monitoring system is capable of detecting unrealistic or impossible data during periods of operation other than start-ups, shutdowns, or malfunctions (e.g., a temperature reading of −200 °C on a boiler) and will alert the operator by alarm or other means. The owner or operator shall record the occurrence. All instances of the alarm or other alert in an operating day or block constitute a single occurrence.

(ii) The monitoring system generates, updated at least hourly throughout each operating day, a running average of the parameter values that have been obtained during that operating day or block, and the capability to observe this running average is readily available on-site to the Administrator during the operating day. The owner or operator shall record the occurrence of any period meeting the criteria in paragraphs (h)(1)(ii)(A) through (C) of this section. All instances in an operating day or block constitute a single occurrence:

(A) The running average is above the maximum or below the minimum established limits;

(B) The running average is based on at least six 1-hour average values; and

(C) The running average reflects a period of operation other than a start-up, shutdown, or malfunction.

(iii) The monitoring system is capable of detecting unchanging data during periods of operation other than start-ups, shutdowns, or malfunctions, except in circumstances where the presence of unchanging data is the expected operating condition based on past experience (e.g., pH in some scrubbers) and will alert the operator by alarm or other means. The owner or operator shall record the occurrence. All instances of the alarm or other alert in an operating day or block constitute a single occurrence.

(iv) The monitoring system will alert the owner or operator by an alarm or other means if the running average parameter value calculated under paragraph (h)(1)(ii) of this section reaches a set point that is appropriately related to the established limit for the parameter that is being monitored.

(v) The owner or operator shall verify the proper functioning of the monitoring system, including its ability to comply with the requirements of paragraphs (h)(1)(i) through (iv) of this section, at the times specified in paragraphs (h)(1)(v)(A) through (C). The owner or operator shall document that the required verifications occurred.

(A) Upon initial installation.

(B) Annually after initial installation.

(C) After any change to the programming or equipment constituting the monitoring system which might reasonably be expected to alter the monitoring system's ability to comply with the requirements of this section.

(vi) The owner or operator shall retain the records identified in paragraphs (h)(1)(vi)(A) through (D) of this section.

(A) Identification of each parameter for each item of equipment for which the owner or operator has elected to comply with the requirements of paragraph (h)(1) of this section.

(B) A description of the applicable monitoring system(s) and how compliance will be achieved with each requirement of paragraphs (h)(1)(i) through (v) of this section. The description shall identify the location and format (e.g., on-line storage, log entries)

for each required record. If the description changes, the owner or operator shall retain, as provided in paragraph (a) of this section, except as provided in paragraph (h)(1)(vi)(D) of this section, both the current and the most recent superseded description.

(C) A description and the date of any change to the monitoring system that would reasonably be expected to impair its ability to comply with the requirements of paragraph (h) of this section.

(D) Owners and operators subject to paragraph (h)(1)(vi)(B) of this section shall retain the current description of the monitoring system as long as the description is current. The current description shall, at all times, be retained on-site or be accessible from a central location by computer or other means that provides access within 2 hours after a request. The owner or operator shall retain all superseded descriptions for at least 5 years after the date of their creation. Superseded descriptions shall be retained on-site (or accessible from a central location by computer or other means that provides access within 2 hours after a request) for at least 6 months after their creation. Thereafter, superseded descriptions may be stored off-site.

(2) If an owner or operator has elected to implement the requirements of paragraph (h)(1) of this section for a parameter with respect to an item of equipment and a period of 6 consecutive months has passed without any deviation as defined in paragraph (h)(2)(iv) of this section, the owner or operator is no longer required to record the daily average, batch cycle daily average, or block average value for any operating day when the daily average, batch cycle daily average, or block average value is less than the maximum or greater than the minimum established limit. With approval by the Administrator, monitoring data generated prior to the compliance date of this subpart shall be credited toward the period of 6 consecutive months if the parameter limit and the monitoring accomplished during the period prior to the compliance date were required and/or approved by the Administrator.

(i) If the owner or operator elects not to retain the daily average, batch cycle daily average, or block average values, the owner or operator shall notify the Administrator in the next Periodic Report as specified in §63.1417(f)(11). The notification shall identify the parameter and unit of equipment.

(ii) If, on any operating day or during any block after the owner or operator has ceased recording the daily average, batch cycle daily average, or block average values as provided in paragraph (h)(2) of this section, there is a deviation as defined in paragraph (h)(2)(iv) of this section, the owner or operator shall immediately resume retaining the daily average, batch cycle daily average, or block average value for each operating day and shall notify the Administrator in the next Periodic Report. The owner or operator shall continue to retain each daily average, batch cycle daily average, or block average value until another period of 6 consecutive months has passed without a deviation as defined in paragraph (h)(2)(iv) of this section.

(iii) The owner or operator shall retain the records specified in paragraphs (h)(1)(i) through (iv) of this section for the duration specified in paragraph (h) of this section. For any calendar week, if compliance with paragraphs (h)(1)(i) through (iv) of this section does not result in retention of a record of at least one occurrence or measured parameter value, the owner or operator shall record and retain at least one value during a period of operation other than a start-up, shutdown, or malfunction.

(iv) For purposes of paragraph (h)(2) of this section, a deviation means that the daily average, batch cycle daily average, or block average value of monitoring data for a parameter is greater than the maximum, or less than the minimum established value, except that the daily average, batch cycle daily average, or block average value during any start-up, shutdown, or malfunction shall not be considered a deviation for purposes of paragraph (h)(2) of this section, if the owner or operator follows the applicable provisions of the start-up, shutdown, and malfunction plan required by §63.6(e)(3).

§ 63.1417 Reporting requirements.

(a) *Reporting and notification.* In addition to the reports and notifications required by subpart A of this part as specified in Table 1 of this subpart, the owner or operator of an affected source shall prepare and submit the reports listed in paragraphs (d) through (i) of this section as applicable. All reports required by this subpart and the schedule for their submittal are listed in Table 5 of this subpart.

(b) *General.* Owners and operators are required to meet the reporting requirements of this subpart unless they can demonstrate that failure to submit information required to be included in a specified report was due to the circumstances described in paragraphs (b)(1) through (3) of this section. Examples of circumstances where this paragraph may apply include information related to newly-added equipment or emission points, changes in the process, changes in equipment required or utilized for compliance with the requirements of this subpart, or changes in methods or equipment for monitoring, recordkeeping, or reporting.

(1) The information was not known in time for inclusion in the report specified by this subpart.

(2) The owner or operator has been diligent in obtaining the information.

(3) The owner or operator submits a report according to the provisions of paragraphs (b)(3)(i) through (iii) of this section, as appropriate.

(i) If this subpart expressly provides for supplements to the report in which the information is required, the owner or operator shall submit the information as a supplement to that report. The information shall be submitted no later than 60 days after it is obtained, unless otherwise specified in this subpart.

(ii) If this subpart does not expressly provide for supplements, but the owner or operator must submit a request for revision of an operating permit pursuant to 40 CFR part 70 or part 71 due to circumstances to which the information pertains, the owner or operator shall submit the information with the request for revision to the operating permit.

(iii) In any case not addressed by paragraph (b)(3)(i) or paragraph (b)(3)(ii) of this section, the owner or operator shall submit the information with the first Periodic Report, as required by this subpart, which has a submission deadline at least 60 days after the information is obtained.

(c) *Submittals.* All reports required under this subpart shall be sent to the Administrator at the appropriate address listed in § 63.13. If acceptable to both the Administrator and the owner or operator of an affected source, reports may be submitted on electronic media.

(d) *Precompliance Report.* Owners or operators of affected sources requesting an extension for compliance; requesting approval to use alternative monitoring parameters, alternative continuous monitoring and recordkeeping, or alternative controls; requesting approval to use engineering assessment to estimate organic HAP emissions from a batch emissions episode as described in § 63.1414(d)(6)(i)(C); wishing to establish parameter monitoring levels according to the procedures contained in § 63.1413(a)(4)(ii); establishing parameter monitoring levels based on a design evaluation as specified in § 63.1413(a)(3); following the procedures in § 63.1413(e)(2); or requesting approval to incorporate a provision for ceasing to collect monitoring data during a start-up, shutdown, or malfunction into the startup, shutdown, and malfunction plan when that monitoring equipment would be damaged if it did not cease to collect monitoring data, as permitted under § 63.1417(d)(9), shall submit a Precompliance Report according to the schedule described in paragraph (d)(1) of this section. The Precompliance Report shall contain the information specified in paragraphs (d)(2) through (11) of this section, as appropriate.

(1) The Precompliance Report shall be submitted to the Administrator no later than 12 months prior to the compliance date. Unless the Administrator objects to a request submitted in the Precompliance Report within 45 days after its receipt, the request shall be deemed approved. For new affected sources, the Precompliance Report

shall be submitted to the Administrator with the application for approval of construction or reconstruction required by §63.5(d), as specified on Table 1 of this subpart. Supplements to the Precompliance Report may be submitted as specified in paragraph (d)(11) of this section.

(2) A request for an extension for compliance, as specified in §63.1401(d), may be submitted in the Precompliance Report. The request for a compliance extension will include the data outlined in §63.6(i)(6)(i)(A), (B), and (D), as required in §63.1401(d)(1).

(3) The alternative monitoring parameter information required in paragraph (j) of this section shall be submitted in the Precompliance Report if, for any emission point, the owner or operator of an affected source seeks to comply through the use of a control technique other than those for which monitoring parameters are specified in this subpart or seeks to comply by monitoring a different parameter than those specified in this subpart.

(4) If the affected source seeks to comply using alternative continuous monitoring and recordkeeping as specified in paragraph (k) of this section, the owner or operator shall submit the information requested in paragraph (d)(4)(i) or (ii) of this section in the Precompliance Report:

(i) The owner or operator shall submit notification of the intent to use the provisions specified in paragraph (k) of this section; or

(ii) The owner or operator shall submit a request for approval to use alternative continuous monitoring and recordkeeping provisions as specified in paragraph (k) of this section.

(5) The owner or operator shall report the intent to use alternative controls to comply with the provisions of this subpart in the Precompliance Report. The Administrator may deem the alternative controls to be equivalent to the controls required by the standard under the procedures outlined in §63.6(g).

(6) If a request for approval to use engineering assessment to estimate organic HAP emissions from a batch emissions episode, as specified in §63.1414(d)(6)(i)(C), is being made, the information required by §63.1414(d)(6)(iii)(B) shall be submitted in the Precompliance Report.

(7) If an owner or operator elects to establish parameter monitoring levels according to the procedures contained in §63.1413(a)(4)(ii), or will be establishing parameter monitoring levels based on a design evaluation as specified in §63.1413(a)(3), the following information shall be submitted in the Precompliance Report:

(i) Identification of which procedures (*i.e.*, §63.1413(a)(1)(i) or (ii)) are to be used; and

(ii) A description of how the parameter monitoring level is to be established. If the procedures in §63.1413(a)(4)(ii) are to be used, a description of how performance test data will be used shall be included.

(8) If an owner or operator is complying with the mass emission limit specified in §63.1406(a)(1)(iii) or (a)(2)(iii), §63.1407(b)(2), or §63.1408(b)(2), the sample of production records specified in §63.1413(e)(2) shall be submitted in the Precompliance Report.

(9) If the owner or operator is requesting approval to incorporate a provision for ceasing to collect monitoring data during a start-up, shutdown, or malfunction into the start-up, shutdown, and malfunction plan when that monitoring equipment would be damaged if it did not cease to collect monitoring data, the information specified in paragraphs (d)(9)(i) and (ii) of this section shall be supplied in the Precompliance Report or in a supplement to the Precompliance Report. The Administrator shall evaluate the supporting documentation and shall approve the request only if, in the Administrator's judgment, the specific monitoring equipment would be damaged by the contemporaneous start-up, shutdown, or malfunction.

(i) Documentation supporting a claim that the monitoring equipment would be damaged by the contemporaneous start-up, shutdown, or malfunction.

(ii) A request to incorporate such a provision for ceasing to collect monitoring data during a start-up, shutdown, or malfunction into the start-up, shutdown, and malfunction plan.

(10) The procedure for a control device controlling less than 1 ton per year of uncontrolled organic HAP emissions shall be submitted, as specified in § 63.1415(a)(2). Such a procedure shall meet the requirements specified in § 63.1415(a)(2).

(11) Supplements to the Precompliance Report may be submitted as specified in paragraph (d)(11)(i) or (ii) of this section. Unless the Administrator objects to a request submitted in a supplement to the Precompliance Report within 45 days after its receipt, the request shall be deemed approved.

(i) Supplements to the Precompliance Report may be submitted to clarify or modify information previously submitted.

(ii) Supplements to the Precompliance Report may be submitted to request approval to use alternative monitoring parameters, as specified in paragraph (j) of this section; to use alternative continuous monitoring and recordkeeping, as specified in paragraph (k) of this section; to use alternative controls, as specified in paragraph (d)(5) of this section; to use engineering assessment to estimate organic HAP emissions from a batch emissions episode, as specified in paragraph (d)(6) of this section; to establish parameter monitoring levels according to the procedures contained in § 63.1413(a)(4)(ii) or (a)(3), as specified in paragraph (d)(7) of this section; or to include a provision for ceasing to collect monitoring data during a start-up, shutdown, or malfunction in the start-up, shutdown, and malfunction plan when that monitoring equipment would be damaged if it did not cease to collect monitoring data, as specified in paragraph (d)(9) of this section.

(e) *Notification of Compliance Status.* For existing and new affected sources, a Notification of Compliance Status shall be submitted within 150 days after the compliance dates specified in § 63.1401. For equipment leaks, the Notification of Compliance Status shall contain the information specified in 40 CFR part 63, subpart UU. For storage vessels, continuous process vents, batch process vents, and aggregate batch vent streams, the Notification of Compliance Status shall contain the information listed in paragraphs (e)(1) through (6) of this section.

(1) The results of any emission point applicability determinations, performance tests, design evaluations, inspections, continuous monitoring system performance evaluations, any other information used to demonstrate compliance, and any other information, as appropriate, required to be included in the Notification of Compliance Status under 40 CFR part 63, subpart WW and subpart SS, as referred to in § 63.1404 for storage vessels; under 40 CFR part 63, subpart SS, as referred to in § 63.1405 for continuous process vents; under § 63.1416(f)(1) through (3) for continuous process vents; under § 63.1416(d)(1) for batch process vents; and under § 63.1416(e)(1) for aggregate batch vent streams. In addition, each owner or operator shall comply with paragraphs (e)(1)(i) and (ii) of this section.

(i) For performance tests, applicability determinations, and estimates of organic HAP emissions that are based on measurements, the Notification of Compliance Status shall include one complete test report, as described in paragraph (e)(1)(ii) of this section, for each test method used for a particular kind of emission point. For additional tests performed for the same kind of emission point using the same method, the results and any other required information shall be submitted, but a complete test report is not required.

(ii) A complete test report shall include a brief process description, sampling site description, description of sampling and analysis procedures and any modifications to standard procedures, quality assurance procedures, record of operating conditions during the test, record of preparation of standards, record of calibrations, raw data sheets for field sampling, raw data sheets for field and laboratory analyses, documentation of calculations, and any other information required by the test method.

(2) For each monitored parameter for which a maximum or minimum level is required to be established, the Notification of Compliance Status shall contain the information specified in paragraphs (e)(2)(i) through (iv) of this section, unless this information has been

established and provided in the operating permit.

(i) The required information shall include the specific maximum or minimum level of the monitored parameter(s) for each emission point.

(ii) The required information shall include the rationale for the specific maximum or minimum level for each parameter for each emission point, including any data and calculations used to develop the level and a description of why the level indicates proper operation of the control device or control technology.

(iii) The required information shall include a definition of the affected source's operating day, as specified in §63.1416(c)(2)(ii), for purposes of determining daily average values or batch cycle daily average values of monitored parameters. The required information shall include a definition of the affected source's block(s), as specified in §63.1416(c)(2)(ii), for purposes of determining block average values of monitored parameters.

(iv) For batch process vents, the required information shall include a definition of each batch cycle that requires the control of one or more batch emission episodes during the cycle, as specified in §§63.1413(e)(1)(iii) and 63.1416(c)(2)(ii).

(3) When the determination of applicability for process units, as made following the procedures in §63.1400(g), indicates that a process unit is an APPU, an identification of the APPU and a statement indicating that the APPU is an APPU that produces more than one intended product at the same time, as specified in §63.1400(g)(1), or is a flexible operations process unit as specified in §63.1400(g)(2) through (4).

(4) [Reserved]

(5) The results for each predominant use determination for storage vessels belonging to an affected source subject to this subpart that is made under §63.1400(h)(6).

(6) Notification that the owner or operator has elected to comply with §63.1416(h), Reduced Recordkeeping Program.

(7) Notification that an affected source is exempt from the equipment leak provisions of §63.1410 according to the provisions of §63.1400(f), and the affected source's actual annual production of amino/phenolic resins for the 12-month period preceding December 14, 1998.

(8) An owner or operator with a combustion device, recovery device, or recapture device affected by the situation described in §63.1400(i)(5) shall identify which rule shall be complied with for monitoring, recordkeeping, and reporting requirements, as allowed under §63.1400(i)(5).

(9) Data or other information used to demonstrate that an owner or operator may use engineering assessment to estimate emissions for a batch emission episode, as specified in §63.1413(d)(6)(iii)(A).

(f) *Periodic Reports*. For existing and new affected sources, each owner or operator shall submit Periodic Reports as specified in paragraph (f)(1) of this section. In addition, for equipment leaks subject to §63.1410, the owner or operator shall submit the information specified in 40 CFR part 63, subpart UU, and for heat exchange systems subject to §63.1409, the owner or operator shall submit the information specified in §63.1409. Section 63.1415 shall govern the use of monitoring data to determine compliance for emissions points required to apply controls by the provisions of this subpart.

(1) Except as specified in paragraph (f)(12) of this section, a report containing the information in paragraph (f)(2) of this section or containing the information in paragraphs (f)(3) through (11) of this section, as appropriate, shall be submitted semiannually no later than 60 days after the end of each 180 day period. The first report shall be submitted no later than 240 days after the date the Notification of Compliance Status is due and shall cover the 6-month period beginning on the date the Notification of Compliance Status is due. Subsequent reports shall cover each preceding 6-month period.

(2) If none of the compliance exceptions specified in paragraphs (f)(3) through (11) of this section occurred during the 6-month period, the Periodic Report required by paragraph (f)(1) of this section shall be a statement that the affected source was in compliance for the preceding 6-month period and

no activities specified in paragraphs (f)(3) through (11) of this section occurred during the preceding 6-month period.

(3) For an owner or operator of an affected source complying with the provisions of §§ 63.1404 through 63.1409 for any emission point, Periodic Reports shall include:

(i) All information specified in 40 CFR part 63, subpart WW and subpart SS for storage vessels; 40 CFR part 63, subpart SS for continuous process vents; § 63.1416(d)(3)(ii) for batch process vents; and § 63.1416(e) for aggregate batch vent stream.

(ii) The daily average values, batch cycle daily average values, or block average values of monitored parameters for deviations, as specified in § 63.1413(h), of operating parameters. In addition, the periods and duration of periods when monitoring data were not collected shall be specified.

(4) Notification if one or more emission point(s) or one or more APPU is added to an affected source. The owner or operator shall submit the following information:

(i) A description of the addition to the affected source;

(ii) Notification of applicability status (i.e., does the emission point require control) of the additional emission point, if appropriate, or notification of all emission points in the added APPU.

(5) If there is a deviation from the mass emission limit specified in § 63.1406(a)(1)(iii) or (a)(2)(iii), § 63.1407(b)(2), or § 63.1408(b)(2), the following information, as appropriate, shall be included:

(i) The cumulative average monthly emission rate or the 12-month rolling average monthly emission rate, as appropriate.

(ii) The individual monthly emission rate data points making up the cumulative average monthly emission rate or the 12-month rolling average monthly emission rate, as appropriate.

(iii) If an owner or operator is demonstrating compliance using the procedures in § 63.1413(e)(2)(ii), the monthly value of the site-specific emission limit.

(6) If any performance tests are reported in a Periodic Report, the following information shall be included:

(i) One complete test report shall be submitted for each test method used for a particular kind of emission point tested. A complete test report shall contain the information specified in paragraph (e)(1)(ii) of this section.

(ii) For additional tests performed for the same kind of emission point using the same method, results and any other information required shall be submitted, but a complete test report is not required.

(7) The Periodic Report shall include the results for each change made to a primary product determination for amino/phenolic resins made under § 63.1400(g).

(8) The Periodic Report shall include the results for each change made to a predominant use determination for a storage vessel belonging to an affected source subject to this subpart that is made under § 63.1400(h)(6).

(9) If an owner or operator invokes the delay of repair provisions for a heat exchange system, the following information shall be submitted, as appropriate. If the leak remains unrepaired, the information shall also be submitted in each subsequent periodic report until repair of the leak is reported.

(i) The presence of the leak and the date that the leak was detected.

(ii) Whether or not the leak has been repaired. If the leak is repaired, the date the leak was successfully repaired. If the leak remains unrepaired, the expected date of repair.

(iii) The reason(s) for delay of repair. If delay of repair is invoked due to the reasons described in § 63.1409(e)(2), documentation of emissions estimates shall be included.

(10) Notification that the owner or operator has elected to comply with § 63.1416(h), Reduced Recordkeeping Program.

(11) Notification that the owner or operator has elected to not retain the daily average, batch cycle daily average, or block average values, as appropriate, as specified in § 63.1416(h)(2)(i).

(12) The owner or operator of an affected source shall submit quarterly reports for particular emission points as

specified in paragraphs (f)(12)(i) through (iv) of this section.

(i) The owner or operator of an affected source shall submit quarterly reports for a period of 1 year for an emission point if the Administrator requests the owner or operator to submit quarterly reports for the emission point.

(ii) The quarterly reports shall include all information specified in paragraphs (f)(3) through (11) of this section applicable to the emission point for which quarterly reporting is required under paragraph (f)(12)(i) of this section. Information applicable to other emission points within the affected source shall be submitted in the semiannual reports required under paragraph (f)(1) of this section.

(iii) Quarterly reports shall be submitted no later than 60 days after the end of each quarter.

(iv) After quarterly reports have been submitted for an emission point for 1 year, the owner or operator may return to semiannual reporting for the emission point unless the Administrator requests the owner or operator to continue to submit quarterly reports.

(g) *Start-up, shutdown, and malfunction reports.* For the purposes of this subpart, the semiannual start-up, shutdown, and malfunction reports shall be submitted on the same schedule as the Periodic Reports required under paragraph (f) of this section instead of being submitted on the schedule specified in §63.10(d)(5)(i). Said reports shall include the information specified in §63.1416(b)(1) and (2) and shall contain the name, title, and signature of the owner or operator or other responsible official who is certifying its accuracy.

(h) *Other reports.* Other reports shall be submitted as specified in paragraphs (h)(1) through (7) of this section.

(1) For storage vessels, the notifications of inspections required by 40 CFR part 63, subpart WW shall be submitted.

(2) A site-specific test plan shall be submitted no later than 90 days before the planned date for a performance test. Unless the Administrator requests changes to the site-specific test plan within 45 days after its receipt, the site-specific test plan shall be deemed approved. The test plan shall include a description of the planned test and rationale for why the planned performance test will provide adequate and representative results for demonstrating the performance of the control device. If required by §63.1413(e)(1) or §63.1414(d)(5), the test plan shall include an emission profile and rationale for why the selected test period is representative.

(3) The owner or operator shall notify the Administrator of the intention to conduct a performance test at least 30 days before the performance test is scheduled in order to allow the Administrator the opportunity to have an observer present during the test. If after 30 days notice for an initially scheduled performance test, there is delay (due to operational problems, etc.) in conducting the scheduled performance test, the owner or operator of an affected source shall notify the Administrator as soon as possible of any delay in the original test date, either by providing at least 7 days prior notice of the rescheduled date of the performance test, or by arranging a rescheduled date with the Administrator by mutual agreement.

(4) When the conditions of §63.1400(g)(7) or the conditions of §63.1400(g)(8) are met, notification of changes to the primary product for an APPU or process unit shall be submitted. When a notification is made in response to a change in the primary product under §63.1400(g)(7), rationale for why it is anticipated that no amino/phenolic resins will be produced in the process unit in the future shall be included.

(5) Owners or operators of APPU or emission points (other than equipment leak components subject to §63.1410) that are added to the affected source under the provisions of §63.1400(d)(2) or (3) or under the provisions of §63.5(b)(6) shall submit reports as specified in paragraphs (h)(5)(i) through (ii) of this section.

(i) Reports shall include:

(A) A description of the process change or addition, as appropriate;

(B) The planned start-up date and the appropriate compliance date; and

(C) Identification of the emission points (except equipment leak components subject to §63.1410) specified in

paragraphs (h)(5)(i)(C)(*1*) through (*3*) of this section, as applicable.

(*1*) All the emission points in an added APPU.

(*2*) All the emission points in an affected source that becomes a new affected source.

(*3*) All the added or created emission points resulting from a process change.

(ii) If the owner or operator wishes to request approval to use alternative monitoring parameters, alternative continuous monitoring or recordkeeping, alternative controls, engineering assessment to estimate organic HAP emissions from a batch emissions episode, or wishes to establish parameter monitoring levels according to the procedures contained in § 63.1413(a)(1)(ii) or (ii), a Precompliance Report shall be submitted no later than 180 days prior to the appropriate compliance date.

(6) The information specified in paragraphs (h)(6)(i) and (ii) of this section shall be submitted when a small control device becomes a large control device, as specified in § 63.1413(a)(1)(ii).

(i) Notification that a small control device has become a large control device and the site-specific test plan shall be submitted within 60 days of the date the small control device becomes a large control device. The site-specific test plan shall include the information specified in paragraph (h)(2) of this section. Approval of the site-specific test plan shall follow paragraph (h)(2) of this section.

(ii) Results of the performance test required by § 63.1413(a)(1)(ii) shall be submitted within 150 days of the date the small control device becomes a large control device.

(7) Whenever a continuous process vent becomes subject to control requirements under 40 CFR part 63, subpart SS, as a result of a process change, the owner or operator shall submit a report within 60 days after the performance test or applicability assessment, whichever is sooner. The report may be submitted as part of the next Periodic Report required by paragraph (f) of this section.

(i) The report shall include the following information:

(A) A description of the process change;

(B) The results of the recalculation of the organic HAP concentration, volumetric flow rate, and or TRE index value required under § 63.1412 and recorded under § 63.1416(f).

(C) A statement that the owner or operator will comply with the requirements specified in § 63.1405.

(ii) If a performance test is required as a result of a process change, the owner or operator shall specify that the performance test has become necessary due to a process change. This specification shall be made in the performance test notification to the Administrator, as specified in paragraph (h)(3) of this section.

(iii) If a process change does not result in additional applicable requirements, then the owner or operator shall include a statement documenting this in the next Periodic Report required by paragraph (f) of this section.

(i) *Operating permit application*. An owner or operator who submits an operating permit application instead of a Precompliance Report shall submit the information specified in paragraph (d) of this section, Precompliance Report, as applicable.

(j) *Alternative monitoring parameters*. The owner or operator who has been directed by any section of this subpart or any section of another subpart referenced by this subpart that expressly referenced this paragraph (j) to set unique monitoring parameters, or who requests approval to monitor a different parameter than those specified in § 63.1415(b), shall submit the information specified in paragraphs (j)(1) through (3) of this section in the Precompliance Report, as required by paragraph (d) of this section.

(1) The required information shall include a description of the parameter(s) to be monitored to ensure the recovery device, control device, or control technology is operated in conformance with its design and achieves the specified emission limit or percent reduction and an explanation of the criteria used to select the parameter(s).

(2) The required information shall include a description of the methods and procedures that will be used to demonstrate that the parameter indicates proper operation, the schedule for this demonstration, and a statement that

the owner or operator will establish a level for the monitored parameter as part of the Notification of Compliance Status report required in paragraph (e) of this section, unless this information has already been included in the operating permit application.

(3) The required information shall include a description of the proposed monitoring, recordkeeping, and reporting system to include the frequency and content of monitoring, recordkeeping, and reporting. Further, the rationale for the proposed monitoring, recordkeeping, and reporting system shall be included if either condition in paragraph (j)(3)(i) or (ii) of this section is met:

(i) If monitoring and recordkeeping is not continuous; or

(ii) If reports of daily average values will not be included in Periodic Reports when the monitored parameter value is above the maximum level or below the minimum level as established in the operating permit or the Notification of Compliance Status.

(k) *Alternative continuous monitoring.* An owner or operator choosing not to implement the monitoring provisions specified in §63.1415 for storage vessels, continuous process vents, batch process vents, or aggregate batch vent streams may instead request approval to use alternative continuous monitoring provisions according to the procedures specified in paragraphs (k)(1) through (4) of this section. Requests shall be submitted in the Precompliance Report as specified in paragraph (d)(4) of this section if not already included in the operating permit application and shall contain the information specified in paragraphs (k)(2)(i) and (ii) of this section, as applicable.

(1) The provisions in §63.8(f)(5)(i) shall govern the review and approval of requests.

(2) An owner or operator of an affected source that does not have an automated monitoring and recording system capable of measuring parameter values at least once every 15 minutes and that does not generate continuous records may request approval to use a nonautomated system with less frequent monitoring in accordance with paragraphs (k)(2)(i) and (ii) of this section.

(i) The requested system shall include manual reading and recording of the value of the relevant operating parameter no less frequently than once per hour. Daily average (or batch cycle daily average) values shall be calculated from these hourly values and recorded.

(ii) The request shall contain:

(A) A description of the planned monitoring and recordkeeping system;

(B) Documentation that the affected source does not have an automated monitoring and recording system;

(C) Justification for requesting an alternative monitoring and recordkeeping system; and

(D) Demonstration to the Administrator's satisfaction that the proposed monitoring frequency is sufficient to represent control or recovery device operating conditions, considering typical variability of the specific process and control or recovery device operating parameter being monitored.

(3) An owner or operator may request approval to use an automated data compression recording system that does not record monitored operating parameter values at a set frequency (for example, once every 15 minutes) but records all values that meet set criteria for variation from previously recorded values, in accordance with paragraphs (k)(3)(i) and (ii) of this section.

(i) The requested system shall be designed to:

(A) Measure the operating parameter value at least once every 15 minutes;

(B) Except for the monitoring of batch process vents, calculate hourly average values each hour during periods of operation;

(C) Record the date and time when monitors are turned off or on;

(D) Recognize unchanging data that may indicate the monitor is not functioning properly, alert the operator, and record the incident;

(E) Calculate daily average, batch cycle daily average, or block average values of the monitored operating parameter based on all measured data; and

(F) If the daily average is not a deviation, as defined in §63.1413(h), from

the operating parameter, the data for that operating day may be converted to hourly average values, and the four or more individual records for each hour in the operating day may be discarded.

(ii) The request shall contain:

(A) A description of the monitoring system and data compression recording system, including the criteria used to determine which monitored values are recorded and retained;

(B) The method for calculating daily averages and batch cycle daily averages; and

(C) A demonstration that the system meets all criteria in paragraph (k)(3)(i) of this section.

(4) An owner or operator may request approval to use other alternative monitoring systems according to the procedures specified in § 63.8(f)(4).

§ 63.1418 [Reserved]

§ 63.1419 Delegation of authority.

(a) This regulation can be administered by the US EPA, or a delegated authority such as a State, local, or tribal agency. If the US EPA Administrator has delegated this regulation to a State, local, or tribal agency, then that agency has the authority to administer and enforce this regulation. To find out if this regulation is delegated to a State, local, or tribal agency, contact the appropriate EPA Regional Office.

(b) In delegating implementation and enforcement authority of this regulation to a State, local, or tribal agency under section 40 CFR part 63, subpart E, the authorities contained in paragraph (c) of this section are retained by the Administrator of US EPA and are not transferred to the State, local, or tribal agency.

(c) The authorities that will not be delegated to State, local, or tribal agencies are as follows.

(1) Approval of alternatives to the non-opacity emission standards in § 63.1403 through § 63.1410; § 63.1022 through § 63.1034, § 63.1062, § 63.1063(a) and (b), and § 63.1064 under § 63.6(h)(9).

(2) Approval of major alternatives to test methods under § 63.997 and § 63.1414 as defined in § 63.90.

(3) Approval of major alternatives to monitoring under § 63.996 and § 63.1415 as defined in § 63.90.

(4) Approval of major alternatives to recordkeeping and reporting under § 63.998, § 63.999, § 63.1038, § 63.1039, § 63.1065, § 63.1066, § 63.1416, and § 63.1417 as defined in § 63.90 of this chapter.

TABLE 1 TO SUBPART OOO OF PART 63—APPLICABILITY OF GENERAL PROVISIONS TO SUBPART OOO AFFECTED SOURCES

Reference	Applies to subpart OOO	Explanation
63.1(a)(1)	Yes	§ 63.1402 specifies definitions in addition to or that supersede definitions in § 63.2.
63.1(a)(2)	Yes.	
63.1(a)(3)	Yes	§ 63.1401(i) identifies those standards which overlap with the requirements of subpart OOO of this part and specify how compliance shall be achieved.
63.1(a)(4)	Yes	Subpart OOO (this table) specifies the applicability of each paragraph in subpart A of this part.
63.1(a)(5)	No	[Reserved].
63.1(a)(6)–63.1(a)(8)	Yes..	
63.1(a)(9)	No	[Reserved].
63.1(a)(10)	Yes.	
63.1(a)(11)	Yes.	
63.1(a)(12)–63.1(a)(14)	Yes.	
63.1(b)(1)	No.	
63.1(b)(2)	Yes.	
63.1(b)(3)	No	§ 63.1400(e) provides documentation requirements for APPUs not considered affected sources.
63.1(c)(1)	Yes	Subpart OOO (this table) specifies the applicability of each paragraph in subpart A of this part.
63.1(c)(2)	No	Area sources are not subject to this subpart.
63.1(c)(3)	No	[Reserved].
63.1(c)(4)	Yes.	

Reference	Applies to subpart OOO	Explanation
63.1(c)(5)	Yes	Except that affected sources are not required to submit notifications overridden by this table.
63.1(d)	No	[Reserved].
63.1(e)	Yes.	
63.2	Yes	§ 63.1402 specifies the definitions from subpart A of this part that apply to this subpart.
63.3	Yes.	
63.4(a)(1)–63.4(a)(3)	Yes.	
63.4(a)(4)	No	[Reserved].
63.4(a)(5)	Yes.	
63.4(b)	Yes.	
63.4(c)	Yes.	
63.5(a)(1)	Yes	Except the terms ''source'' and ''stationary source'' should be interpreted as having the same meaning as ''affected source.''
63.5(a)(2)	Yes.	
63.5(b)(1)	Yes	Except § 63.1400(d) specifies when construction or reconstruction is subject to new source standards.
63.5(b)(2)	No	[Reserved].
63.5(b)(3)	Yes.	
63.5(b)(4)	Yes	Except that the Initial Notification and § 63.9(b) requirements do not apply.
63.5(b)(5)	Yes.	
63.5(b)(6)	Yes	Except that § 63.1400(d) specifies when construction or reconstruction is subject to new source standards.
63.5(c)	No	[Reserved].
63.5(d)(1)(i)	Yes	Except that the references to the Initial Notification and § 63.9(b)(5) do not apply.
63.5(d)(1)(ii)	Yes	Except that § 63.5(d)(1)(ii)(H) does not apply.
63.5(d)(1)(iii)	No	§ 63.1417(e) specifies Notification of Compliance Status requirements.
63.5(d)(2)	No.	
63.5(d)(3)	Yes	Except § 63.5(d)(3)(ii) does not apply, and equipment leaks subject to § 63.1410 are exempt.
63.5(d)(4)	Yes.	
63.5(e)	Yes.	
63.5(f)(1)	Yes.	
63.5(f)(2)	Yes	Except that where § 63.9(b)(2) is referred to, the owner or operator need not comply.
63.6(a)	Yes.	
63.6(b)(1)	Yes.	
63.6(b)(2)	Yes.	
63.6(b)(3)	Yes.	
63.6(b)(4)	Yes.	
63.6(b)(5)	Yes.	
63.6(b)(6)	No	[Reserved].
63.6(b)(7)	No.	
63.6(c)(1)	Yes	Except that § 63.1401 specifies the compliance date.
63.6(c)(2)	No.	
63.6(c)(3)	No	[Reserved].
63.6(c)(4)	No	[Reserved].
63.6(c)(5)	Yes.	
63.6(d)	No	[Reserved].
63.6(e)	Yes	Except as otherwise specified in this table, § 63.6(e) does not apply to emission points that do not require control under this subpart.[a]
63.6(e)(1)(i)	No	This is addressed by § 63.1400(k)(4).
63.6(e)(1)(ii)	Yes.	
63.6(e)(1)(iii)	Yes.	
63.6(e)(2)	Yes.	

Reference	Applies to subpart OOO	Explanation
63.6(e)(3)(i)	Yes	For equipment leaks (subject to § 63.1410), the start-up, shutdown, and malfunction plan requirement of § 63.6(e)(3)(i) is limited to control devices and is optional for other equipment. The start-up, shutdown, malfunction plan may include written procedures that identify conditions that justify a delay of repair.
63.6(e)(3)(i)(A)	No	This is addressed by § 63.1400(k)(4).
63.6(e)(3)(i)(B)	Yes.	
63.6(e)(3)(i)(C)	Yes.	
63.6(e)(3)(ii)	Yes.	
63.6(e)(3)(iii)	No	Recordkeeping and reporting are specified in §§ 63.1416 and 63.1417.
63.6(e)(3)(iv)	No	Recordkeeping and reporting are specified in §§ 63.1416 and 63.1417.
63.6(e)(3)(v)	Yes.	
63.6(e)(3)(vi)	Yes.	
63.6(e)(3)(vii)	Yes.	
63.6(e)(3)(vii) (A)	Yes.	
63.6(e)(3)(vii) (B)	Yes	Except the plan shall provide for operation in compliance with § 63.1400(k)(4).
63.6(e)(3)(vii) (C)	Yes.	
63.6(e)(3)(viii)	Yes.	
63.6(f)(1)	Yes.	
63.6(f)(2)	Yes	Except § 63.7(c), as referred to in § 63.6(f)(2)(iii)(D), does not apply, and except that § 63.6(f)(2)(ii) does not apply to equipment leaks subject to § 63.1410.
63.6(f)(3)	Yes.	
63.6(g)	Yes.	
63.6(h)	No	This subpart OOO does not require opacity and visible emission standards.
63.6(i)(1)	Yes.	
63.6(i)(2)	Yes.	
63.6(i)(3)	Yes.	
63.6(i)(4)(i)(A)	Yes.	
63.6(i)(4)(i)(B)	No	Dates are specified in §§ 63.1401(e) and 63.1417(d)(1).
63.6(i)(4)(ii)	No.	
63.6(i)(5)–(14)	Yes.	
63.6(i)(15)	No	[Reserved].
63.6(i)(16)	Yes.	
63.6(j)	Yes.	
63.7(a)(1)	Yes.	
63.7(a)(2)	No	§ 63.1417(e) specifies the submittal dates of performance test results for all emission points except equipment leaks; for equipment leaks, compliance demonstration results are reported in the Periodic Reports.
63.7(a)(3)	Yes.	
63.7(b)	No	§ 63.1417 specifies notification requirements.
63.7(c)	No.	
63.7(d)	Yes.	
63.7(e)(1)	Yes	Except that all performance tests shall be conducted at maximum representative operating conditions achievable at the time without disruption of operations or damage to equipment.
63.7(e)(2)	Yes.	
63.7(e)(3)	No	Subpart OOO specifies requirements.
63.7(e)(4)	Yes.	
63.7(f)	Yes	Except that if a site specific test plan is not required, the notification deadline in § 63.7(f)(2)(i) shall be 60 days prior to the performance test, and in § 63.7(f)(3), approval or disapproval of the alternative test method shall not be tied to the site specific test plan.

Reference	Applies to subpart OOO	Explanation
63.7(g)	Yes	Except that the requirements in § 63.1417(e) shall apply instead of the references to the Notification of Compliance Status report in § 63.9(h). In addition, equipment leaks subject to § 63.1410 are not required to conduct performance tests.
63.7(h)	Yes	Except § 63.7(h)(4)(ii) may not be applicable, if the site-specific test plan in § 63.7(c)(2) is not required.
63.8(a)(1)	Yes.	
63.8(a)(2)	No.	
63.8(a)(3)	No	[Reserved].
63.8(a)(4)	Yes.	
63.8(b)(1)	Yes.	
63.8(b)(2)	No	Subpart OOO specifies locations to conduct monitoring.
63.8(b)(3)	Yes.	
63.8(c)(1)	Yes.	
63.8(c)(1)(i)	Yes.	
63.8(c)(1)(ii)	No	For all emission points except equipment leaks, comply with § 63.1416(b)(2); for equipment leaks, comply with requirements in 40 CFR part 63, subpart UU.
63.8(c)(1)(iii)	Yes.	
63.8(c)(2)	Yes.	
63.8(c)(3)	Yes.	
63.8(c)(4)	No	§ 63.1415 specifies monitoring frequency; not applicable to equipment leaks because § 63.1410 does not require continuous monitoring systems.
63.8(c)(5)–63.8(c)(8)	No.	
63.8(d)	No.	
63.8(e)	No.	
63.8(f)(1)–63.8(f)(3)	Yes.	
63.8(f)(4)(i)	No	Timeframe for submitting request is specified in § 63.1417 (j) or (k); not applicable to equipment leaks because § 63.1410 (through reference to 40 CFR part 63, subpart UU) specifies acceptable alternative methods.
63.8(f)(4)(ii)	No	Contents of request are specified in § 63.1417(j) or (k).
63.8(f)(4)(iii)	No.	
63.8(f)(5)(i)	Yes.	
63.8(f)(5)(ii)	No.	
63.8(f)(5)(iii)	Yes.	
63.8(f)(6)	No	Subpart OOO does not require continuous emission monitors.
63.8(g)	No	Data reduction procedures specified in § 63.1416(a) and (h); not applicable to equipment leaks.
63.9(a)	Yes.	
63.9(b)	No	Subpart OOO does not require an initial notification.
63.9(c)	Yes.	
63.9(d)	Yes.	
63.9(e)	No	§ 63.1417 specifies notification deadlines.
63.9(f)	No	Subpart OOO does not require opacity and visible emission standards.
63.9(g)	No.	
63.9(h)	No	§ 63.1417(e) specifies Notification of Compliance Status requirements.
63.9(i)	Yes.	
63.9(j)	No.	
63.10(a)	Yes.	
63.10(b)(1)	No	§ 63.1416(a) specifies record retention requirements.
63.10(b)(2)	No	Subpart OOO specifies recordkeeping requirements.
63.10(b)(3)	No	§ 63.1400(e) requires documentation of sources that are not affected sources.
63.10(c)	No	§ 63.1416 specifies recordkeeping requirements.
63.10(d)(1)	Yes.	

Reference	Applies to subpart OOO	Explanation
63.10(d)(2)	No	§ 63.1417 specifies performance test reporting requirements; not applicable to equipment leaks.
63.10(d)(3)	No	Subpart OOO does not require opacity and visible emission standards.
63.10(d)(4)	Yes.	
63.10(d)(5)	Yes	Except that reports required by § 63.10(d)(5)(i) may be submitted at the same time as Periodic Reports specified in § 63.1417(f). The start-up, shutdown, and malfunction plan, and any records or reports of start-up, shutdown, and malfunction do not apply to emission points that do not require control under this subpart.
63.10(e)	No	§ 63.1417 specifies reporting requirements.
63.10(f)	Yes.	
63.11	Yes	Except that instead of § 63.11(b), § 63.1413(g) shall apply.
63.12	Yes.	
63.13–63.15	Yes.	

[a] The plan and any records or reports of start-up, shutdown, and malfunction do not apply to emission points that do not require control under this subpart.

Table 2 to Subpart OOO of Part 63—Known Organic Hazardous Air Pollutants (HAP) From the Manufacture of Amino/Phenolic Resins

Organic HAP	CAS Number	Organic HAP subject to cooling tower monitoring requirements in § 63.1409 (Yes/No)	
		Column A	Column B
Acrylamide	79–06–1	No	No
Aniline	62–53–3	Yes	No
Biphenyl	92–52–4	Yes	Yes
Cresol and cresylic acid (mixed)	1319–77–3	Yes	No
Cresol and cresylic acid (m-)	108–39–4	Yes	No
Cresol and cresylic acid (o-)	95–48–7	Yes	No
Cresol and cresylic acid (p-)	106–44–5	Yes	No
Diethanolamine	111–42–2	No	No
Dimethylformamide	68–12–2	No	No
Ethylbenzene	100–41–4	Yes	Yes
Ethylene glycol	107–21–1	No	No
Formaldehyde	50–00–0	Yes	No
Glycol ethers	0	No	No
Methanol	67–56–1	Yes	Yes
Methyl ethyl ketone	78–93–3	Yes	Yes
Methyl isobutyl ketone	108–10–1	Yes	Yes
Naphthalene	91–20–3	Yes	Yes
Phenol	108–95–2	Yes	No
Styrene	100–42–5	Yes	Yes
Toluene	108–88–3	No	Yes
Xylenes (NOS)	1330–20–7	Yes	Yes
Xylene (m-)	108–38–3	Yes	Yes
Xylene (o-)	95–47–6	Yes	Yes
Xylene (p-)	106–42–3	Yes	Yes

CAS No. = Chemical Abstract Registry Number.

Table 3 to Subpart OOO of Part 63—Batch Process Vent Monitoring Requirements

Control device	Parameters to be monitored	Frequency/recordkeeping requirements
Scrubber[a]	pH of scrubber effluent, and	Continuous records as specified in § 63.1416(d).[b]
	Scrubber liquid and gas flow rates	Continuous records as specified in § 63.1416(d).[b]
Absorber[a]	Exit temperature of the absorbing liquid, and.	Continuous records as specified in § 63.1416(d).[b]

Control device	Parameters to be monitored	Frequency/recordkeeping requirements
	Exit specific gravity for the absorbing liquid.	Continuous records as specified in § 63.1416(d).[b]
Condenser[a]	Exit (product side) temperature	Continuous records as specified in § 63.1416(d).[a]
Carbon adsorber[a]	Total regeneration steam flow or nitrogen flow, or pressure (gauge or absolute) during carbon bed regeneration cycle(s), and.	Record the total regeneration steam flow or nitrogen flow, or pressure for each carbon bed regeneration cycle.
	Temperature of the carbon bed after regeneration and within 15 minutes of completing any cooling cycle(s).	Record the temperature of the carbon bed after each regeneration and within 15 minutes of completing any cooling cycle(s).
Thermal incinerator	Firebox temperature[c]	Continuous records as specified in § 63.1416(d).[b]
Catalytic incinerator	Temperature upstream and downstream of the catalyst bed.	Continuous records as specified in § 63.1416(d).[b]
Boiler or process heater with a design heat input capacity less than 44 megawatts and where the batch process vents or aggregate batch vent streams are not introduced with or used as the primary fuel.	Firebox temperature[c]	Continuous records as specified in § 63.1416(d).[b]
Flare	Presence of a flame at the pilot light	Hourly records of whether the monitor was continuously operating during batch emission episodes, or portions thereof, selected for control and whether a flame was continuously present at the pilot light during said periods.
All control devices	Diversion to the atmosphere from the control device or.	Hourly records of whether the flow indicator was operating during batch emission episodes, or portions thereof, selected for control and whether a diversion was detected at any time during said periods as specified in § 63.1416(d).
	Monthly inspections of sealed valves	Records that monthly inspections were performed as specified in § 63.1416(d).
Scrubber, absorber, condenser, and carbon adsorber (as an alternative to the requirements previously presented in this table).	Concentration level or reading indicated by an organic monitoring device at the outlet of the control device.	Continuous records as specified in § 63.1416(d).[b]

[a] Alternatively, these devices may comply with the organic monitoring device provisions listed at the end of this table.
[b] ''Continuous records'' is defined in § 63.111.
[c] Monitor may be installed in the firebox or in the ductwork immediately downstream of the firebox before any substantial heat exchange is encountered.

Table 4 to Subpart OOO of Part 63—Operating Parameter Levels

Device	Parameters to be monitored	Established operating parameter(s)
Scrubber	pH of scrubber effluent; and scrubber liquid and gas flow rates.	Minimum pH; and minimum liquid/gas ratio.
Absorber	Exit temperature of the absorbing liquid; and exit specific gravity of the absorbing liquid.	Maximum temperature; and maximum specific gravity.
Condenser	Exit temperature	Maximum temperature.
Carbon absorber	Total regeneration steam or nitrogen flow, or pressure (gauge or absolute)[a] during carbon bed regeneration cycle; and temperature of the carbon bed after regeneration (and within 15 minutes of completing any cooling cycle(s)).	Maximum flow or pressure; and maximum temperature.
Thermal incinerator	Firebox temperature	Minimum temperature.
Catalytic incinerator	Temperature upstream and downstream of the catalyst bed.	Minimum upstream temperature; and minimum temperature difference across the catalyst bed.
Boiler or process heater	Firebox temperature	Minimum temperature.

Device	Parameters to be monitored	Established operating parameter(s)
Other devices (or as an alternate to the requirements previously presented in this table)[b].	Organic HAP concentration level or reading at outlet of device.	Maximum organic HAP concentration or reading.

[a] 25 to 50 mm (absolute) is a common pressure level obtained by pressure swing absorbers.
[b] Concentration is measured instead of an operating parameter.

TABLE 5 TO SUBPART OOO OF PART 63—REPORTS REQUIRED BY THIS SUBPART

Reference	Description of report	Due date
§ 63.1400(j) and Subpart A of this part	Refer to Table 1 and Subpart A of this part.	Refer to Subpart A of this part.
63.1417(d)	Precompliance Report	Existing affected sources—12 months prior to the compliance date. New affected sources—with application for approval of construction or reconstruction.
63.1417(e)	Notification of Compliance Status	Within 150 days after the compliance date.
63.1417(f)	Periodic Reports	Semiannually, no later than 60 days after the end of each 6-month period. See § 63.1417(f)(1) for the due date for the first report.
63.1417(f)(12)	Quarterly reports upon request of the administrator.	No later than 60 days after the end of each quarter.
63.1417(g)	Start-up, shutdown, and malfunction reports.	Semiannually (same schedule as Periodic reports).
63.1417(h)(1)	Notification of storage vessel inspection	As specified in 40 CFR part 63, subpart WW.
63.1417(h)(2)	Site-specific test plan	90 days prior to planned date of test.
63.1417(h)(3)	Notification of planned performance test	30 days prior to planned date of test.
63.1417(h)(4)	Notification of change in primary product	As specified in § 63.1400 (g)(7) or (g)(8).
63.1417(h)(5)	Notification of added emission points	180 days prior to the appropriate compliance date.
63.1417(h)(6)	Notification that a small control device has been redesignated as a large control device.	Within 60 days of the redesignation of control device size.
63.1417(h)(7)	Notification of process change	Within 60 days after performance test or applicability assessment, whichever is sooner.

[a] Note that the APPU remains subject to this subpart until the notification under § 63.1400(g)(7) is made.

TABLE 6 TO SUBPART OOO OF PART 63—COEFFICIENTS FOR TOTAL RESOURCE EFFECTIVENESS[a]

Control device basis	Values of coefficients		
	A	B	C
Flare	5.276×10^{-1}	9.98×10^{-2}	2.096×10^{-3}
Thermal Incinerator 0 Percent Recovery	4.068×10^{-1}	1.71×10^{-2}	8.664×10^{-3}
Thermal Incinerator 70 Percent Recovery	6.868×10^{-1}	3.21×10^{-3}	3.546×10^{-3}

[a] Use according to procedures outlined in this section.
MJ/scm = MegaJoules per standard cubic meter.
scm/min = Standard cubic meters per minute.

Subpart PPP—National Emission Standards for Hazardous Air Pollutant Emissions for Polyether Polyols Production

SOURCE: 64 FR 29439, June 1, 1999, unless otherwise noted.

§ 63.1420 Applicability and designation of affected sources.

(a) *Definition of affected source.* The provisions of this subpart apply to each affected source. Affected sources are described in paragraphs (a)(1) through (4) of this section.

(1) An affected source is either an existing affected source or a new affected source. Existing affected source is defined in paragraph (a)(2) of this section, and new affected source is defined in paragraph (a)(3) of this section.

(2) An existing affected source is defined as the group of one or more polyether polyol manufacturing process units (PMPUs) and associated equipment, as listed in paragraph (a)(4) of this section, that is not part of a new affected source, as defined in paragraph (a)(3) of this section, and that is located at a plant site that is a major source.

(3) A new affected source is defined as a source that meets the criteria of paragraph (a)(3)(i), (ii), or (iii) of this section. The situation described in paragraph (a)(3)(i) of this section is distinct from those situations described in paragraphs (a)(3)(ii) and (iii) of this section.

(i) At a site without organic HAP emission points before September 4, 1997 (i.e., a ''greenfield'' site), the group of one or more PMPUs and associated equipment, as listed in paragraph (a)(4) of this section, that is part of a major source, and on which construction for the PMPU(s) commenced after September 4, 1997;

(ii) The group of one or more PMPUs meeting the criteria in paragraph (g)(1)(i) of this section; or

(iii) A reconstructed affected source meeting the criteria in paragraph (g)(2)(i) of this section.

(4) The affected source also includes the emission points and equipment specified in paragraphs (a)(4)(i) through (vi) of this section that are associated with a PMPU (or a group of PMPUs) making up an affected source, as defined in §63.1423.

(i) Each waste management unit.

(ii) Maintenance wastewater.

(iii) Each heat exchange system.

(iv) Equipment required by or utilized as a method of compliance with this subpart which may include control techniques and recovery devices.

(v) Product finishing operation.

(vi) Each feed or catalyst operation.

(b) *PMPUs without organic HAP*. The owner or operator of a PMPU that is part of an affected source, as defined in paragraph (a) of this section, but that does not use or manufacture any organic HAP during the production of one or more products is only subject to the provisions of this subpart as specified in paragraph (b)(1) or (2) of this section, as applicable. Products or raw material(s) containing organic HAP as impurities only are not considered organic HAP for the purposes of this paragraph.

(1) If an organic HAP is not used or manufactured in the production of polyether polyols, the PMPU is not subject to any provisions of this subpart, except that the owner or operator shall comply with either paragraph (b)(1)(i) or (ii) of this section. The owner or operator is not required to comply with the provisions of 40 CFR part 63, subpart A (the General Provisions) for that PMPU.

(i) Retain information, data, and analyses used to document the basis for the determination that the PMPU does not use or manufacture any organic HAP. Types of information that could document this determination include, but are not limited to, records of chemicals purchased for the process, analyses of process stream composition, engineering calculations, or process knowledge.

(ii) When requested by the Administrator, demonstrate that the PMPU does not use or manufacture any organic HAP.

(2) If an organic HAP is used or manufactured in the production of polyether polyols, but an organic HAP is not used in the production of one or more products that are not polyether polyols, the PMPU is not subject to any provision of this subpart other than paragraph (b)(1)(i) or (ii) of this section during the production of the non-polyether polyol products that do not use or manufacture any organic HAP.

(c) *Emission points included in the affected source but not subject to the provisions of this subpart*. The affected source includes the emission points listed in paragraphs (c)(1) through (12) of this section, but these emission points are not subject to the requirements of this subpart or the provisions of 40 CFR part 63, subpart A.

(1) Equipment that does not contain organic HAP or that contains organic

HAP as impurities only and is located at a PMPU that is part of an affected source.

(2) Stormwater managed in segregated sewers.

(3) Water from fire-fighting and deluge systems in segregated sewers.

(4) Spills.

(5) Water from safety showers.

(6) Water from testing of deluge systems.

(7) Water from testing of firefighting systems.

(8) Vessels that store and/or handle material that contains no organic HAP or organic HAP as impurities only.

(9) Equipment that operates in organic HAP service for less than 300 hours during the calendar year.

(10) Loading racks, loading arms, or loading hoses that only transfer liquids containing HAP as impurities.

(11) Loading racks, loading arms, or loading hoses that vapor balance during all loading operations.

(12) Utility fluids, such as heat transfer fluids.

(d) *Processes exempted from the affected source*. The processes specified in paragraphs (d)(1) through (3) of this section are not part of the affected source and are exempted from the requirements of both this subpart and subpart A of this part.

(1) Research and development facilities.

(2) Solvent reclamation, recovery, or recycling operations at hazardous waste treatment, storage, and disposal facilities (TSDF) requiring a permit under 40 CFR part 270 that are not part of a PMPU to which this subpart applies.

(3) Reactions or processing that occur after the epoxide polymerization is complete and after all catalyst removal steps, if any, are complete.

(e) *Primary product determination and applicability*. An owner or operator of a process unit that produces or plans to produce a polyether polyol shall determine if the process unit is subject to this subpart in accordance with this paragraph.

(1) *Initial primary product determination*. The owner or operator shall initially determine the primary product of each process unit in accordance with paragraphs (e)(1)(i) through (iii) of this section.

(i) If a process unit manufactures only one product, then that product shall represent the primary product of the process unit.

(ii) If a process unit produces more than one intended product at the same time, the primary product shall be determined in accordance with paragraph (e)(1)(ii)(A) or (B) of this section.

(A) The product for which the process unit has the greatest annual design capacity on a mass basis shall represent the primary product of the process unit, or

(B) If a process unit has the same maximum annual design capacity on a mass basis for two or more products and if one of those products is a polyether polyol, then the polyether polyol shall represent the primary product of the process unit.

(iii) If a process unit is designed and operated as a flexible operation unit, the primary product shall be determined as specified in paragraph (e)(1)(iii)(A) or (B) of this section based on the anticipated operations for the 5 years following September 4, 1997 for existing process units, or for the first year after the process unit begins production of any product for the new process units. If operations cannot be anticipated sufficiently to allow the determination of the primary product for the specified period, applicability shall be determined in accordance with paragraph (e)(2) of this section.

(A) If the flexible operation unit will manufacture one product for the greatest operating time over the specified 5-year period for existing process units, or the specified 1-year period for new process units, then that product shall represent the primary product of the flexible operation unit.

(B) If the flexible operation unit will manufacture multiple products equally based on operating time, then the product with the greatest expected production on a mass basis over the specified 5-year period for existing process units, or the specified 1-year period for new process units shall represent the primary product of the flexible operation unit.

(iv) If, according to paragraph (e)(1)(i), (ii), or (iii) of this section, the

primary product of a process unit is a polyether polyol, then that process unit shall be designated as a PMPU. If the plant site is a major source, that PMPU and associated equipment, as listed in paragraph (a)(4) of this section, is either an affected source or part of an affected source comprised of one or more other PMPUs and associated equipment, as listed in paragraph (a)(4) of this section, and subject to this subpart. If the primary product of a process unit is not a polyether polyol, then that process unit is not a PMPU.

(2) *Provisions if primary product cannot be determined.* If the primary product cannot be determined for a flexible operation unit in accordance with paragraph (e)(1)(iii) of this section, applicability shall be determined in accordance with this paragraph.

(i) If the owner or operator can determine that a polyether polyol is not the primary product, then that flexible operation unit is not a PMPU.

(ii) If the owner or operator cannot determine that a polyether polyol is not the primary product as specified in paragraph (e)(2)(i) of this section, applicability shall be determined in accordance with paragraph (e)(2)(ii)(A) or (B) of this section.

(A) If the flexible operation unit is an existing process unit, the flexible operation unit shall be designated as a PMPU if a polyether polyol was produced for 5 percent or greater of the total operating time of the flexible operation unit since September 4, 1997.

(B) If the flexible operation unit is a new process unit, the flexible operation unit shall be designated as a PMPU if the owner or operator anticipates that a polyether polyol will be manufactured in the flexible operation unit at any time in the first year after the date the unit begins production of any product.

(3) *Annual applicability determination for non-PMPUs that have produced a polyether polyol.* Once per year beginning June 1, 2004, the owner or operator of each flexible operation unit that is not designated as a PMPU, but that has produced a polyether polyol at any time in the preceding 5-year period or since the date that the unit began production of any product, whichever is shorter, shall perform the evaluation described in paragraphs (e)(3)(i) through (iii) of this section. However, an owner or operator that does not intend to produce any elastomer product in the future, in accordance with paragraph (e)(9) of this section, is not required to perform the evaluation described in paragraphs (e)(3)(i) through (iii) of this section.

(i) For each product produced in the flexible operation unit, the owner or operator shall calculate the percentage of total operating time over which the product was produced during the preceding 5-year period.

(ii) The owner or operator shall identify the primary product as the product with the highest percentage of total operating time for the preceding 5-year period.

(iii) If the primary product identified in paragraph (e)(3)(ii) is a polyether polyol, the flexible operation unit shall be designated as a PMPU. The owner or operator shall notify the Administrator no later than 45 days after determining that the flexible operation unit is a PMPU, and shall comply with the requirements of this subpart in accordance with paragraph (g)(1) of this section for the flexible operation unit.

(4) *Applicability determination for non-PMPUs that have not produced a polyether polyol.* The owner or operator that anticipates the production of a polyether polyol in a process unit that is not designated as a PMPU, and in which no polyether polyol products have been produced in the previous 5-year period or since the date that the process unit began production of any product, whichever is shorter, shall use the procedures in paragraph (e)(1) or (2) of this section to determine if the process unit is designated as a PMPU, with the exception that for existing process units, owners or operators shall project production for the 5 years following the date that the owner or operator anticipates initiating the production of a polyether polyol, instead of the 5 years following September 4, 1997. If the unit is designated as a PMPU, the owner or operator shall comply in accordance with paragraph (g)(1) of this section.

(5) *Applicability of requirements for PMPUs that are flexible operation units.* The owner or operator of PMPUs that

are flexible operation units shall comply with the provisions of this subpart in accordance with paragraphs (e)(5)(i) through (iii) of this section.

(i) *Control requirements.* The owner or operator shall comply with the control requirements of this subpart in accordance with paragraphs (e)(5)(i)(A) and (B) of this section.

(A) During periods when the PMPU produces polyether polyols, the owner or operator shall comply with the provisions of this subpart.

(B) During periods when the PMPU produces products other than polyether polyols, the owner or operator is not required to install additional combustion, recovery, or recapture devices (to otherwise demonstrate compliance). However, the owner or operator shall continue to operate any existing combustion, recovery, or recapture devices that are required for compliance during the production of polyether polyols, with the exceptions provided in paragraph (e)(5)(iv) of this section. If extended cookout (ECO) is the control technique chosen for epoxide emission reduction, then ECO or a control technique providing an equivalent reduction in epoxide emissions should continue to be used for epoxide emission reduction, if the non-polyether polyol being produced uses epoxide monomers.

(ii) *Monitoring requirements.* The owner or operator shall comply with the monitoring requirements of this subpart in accordance with paragraphs (e)(5)(ii)(A) and (B) of this section, and paragraph (e)(5)(ii)(C) of this section if applicable.

(A) The owner or operator shall establish a single parameter monitoring level (for each parameter required to be monitored at each device subject to monitoring requirements) in accordance with § 63.1438(a) based on emission point and control technique characteristics when polyether polyol is being produced.

(B) The owner or operator shall monitor each parameter at each device subject to monitoring requirements at all times (during periods when the PMPU produces polyether polyols, and during periods when the PMPU produces products other than polyether polyols), with the exceptions provided in paragraph (e)(5)(iv) of this section.

(C) If ECO is used to reduce epoxide emissions, a parameter monitoring level shall be established for the production of non-polyether polyol products as the average of the established parameter levels for all product classes produced. During periods when products other than polyether polyols are produced, the ECO shall be performed so that the parameter monitoring level established for the production of non-polyether polyol products is maintained when the ECO is used as a control technique.

(iii) *Group determinations.* For emission points where the owner or operator is required to determine if the emission point is Group 1 according the definitions in § 63.1423 (storage vessels, process vents for nonepoxide organic HAP emissions used to make or modify the product, and wastewater), the owner or operator shall determine the group status based on emission point characteristics when polyether polyol is being manufactured. Group 1 emission points shall be controlled in accordance with paragraph (e)(5)(i) of this section.

(iv) *Exceptions.* During periods when products described in paragraphs (e)(5)(iv)(A) and (B) of this section are produced, the owner or operator is not required to comply with the provisions of this subpart.

(A) Products in which no organic HAP is used or manufactured, provided that the owner or operator comply with paragraph (b)(2) of this section.

(B) Products that make the PMPU subject to 40 CFR part 63, subpart GGG (Pharmaceuticals Production NESHAP).

(6)–(7) [Reserved]

(8) *Requirements for process units that are not PMPUs.* If it is determined that a process unit is not subject to this subpart, the owner or operator shall either retain all information, data, and analysis used to document the basis for the determination that the process unit is not a PMPU, or, when requested by the Administrator, demonstrate that the process unit is not a PMPU.

(9) *PMPUs terminating production of all polyether polyols.* If a PMPU terminates the production of all polyether polyols, and the owner or operator does not anticipate the production of any

polyether polyols in the future in that PMPU, the process unit is no longer a PMPU and is not subject to this subpart after notification is made to the Administrator. This notification shall be accompanied by a rationale for why it is anticipated that no polyether polyols will be produced in the process unit in the future.

(10) *Redetermination of applicability to PMPUs that are flexible operation units.* Whenever changes in production occur that could reasonably be expected to change the primary product of a PMPU that is operating as a flexible operation unit from a polyether polyol to a product that would make the process unit subject to another subpart of this part, the owner or operator shall reevaluate the primary product, in accordance with paragraphs (e)(3)(i) and (ii) of this section. If the conditions in paragraphs (e)(10)(i) through (iii) of this section are met, the flexible operation unit shall no longer be designated as a PMPU after the compliance date of the other subpart, and shall no longer be subject to the provisions of this subpart after the date that the process unit is required to be in compliance with the provisions of the other subpart. If the conditions in paragraphs (e)(10)(i) through (iii) of this section are not met, the flexible operation unit shall continue to be considered a PMPU and subject to the requirements of this subpart.

(i) The product identified as the primary product is not polyether polyol;

(ii) The production of the product identified as the primary product is subject to another subpart of this part; and

(iii) The owner or operator submits a notification to the Administrator of the pending change in applicability.

(f) *Storage vessel ownership determination.* The owner or operator shall follow the procedures specified in paragraphs (f)(1) through (7) of this section to determine to which process unit a storage vessel shall be assigned.

(1) If a storage vessel is already subject to another subpart of 40 CFR part 63 (National Emission Standards for Hazardous Air Pollutants for Source Categories) on June 1, 1999, that storage vessel shall be assigned to the process unit subject to the other subpart, and none of the other provisions in this subpart shall apply to that storage vessel.

(2) If a storage vessel is dedicated to a single process unit, the storage vessel shall be assigned to that process unit.

(3) If a storage vessel is shared among process units, then the storage vessel shall be assigned to that process unit located on the same plant site as the storage vessel that has the greatest input into or output from the storage vessel (i.e., the process unit that has the predominant use of the storage vessel.)

(4) If predominant use cannot be determined for a storage vessel that is shared among process units and if only one of those process units is a PMPU subject to this subpart, the storage vessel shall be assigned to that PMPU.

(5) If predominant use cannot be determined for a storage vessel that is shared among process units and if more than one of the process units are PMPUs that have different primary products and that are subject to this subpart, then the owner or operator shall assign the storage vessel to any one of the PMPUs sharing the storage vessel.

(6) If the predominant use of a storage vessel varies from year to year, then predominant use shall be determined based on the utilization that occurred during the year preceding June 1, 1999 or based on the expected utilization for the 5 years following June 1, 1999 for existing affected sources, whichever is more representative of the expected operations for that storage vessel, and based on the expected utilization for the 5 years after initial start-up for new affected sources. The determination of predominant use shall be reported in the Notification of Compliance Status, as required by § 63.1439(e)(5)(v).

(7) Where a storage vessel is located at a major source that includes one or more process units which place material into or receive material from the storage vessel, but the storage vessel is located in a tank farm (including a marine tank farm), the applicability of this subpart shall be determined according to the provisions in paragraphs (f)(7)(i) through (iv) of this section.

(i) The storage vessel may only be assigned to a process unit that utilizes the storage vessel and does not have an intervening storage vessel for that product (or raw materials, as appropriate). With respect to any process unit, an intervening storage vessel means a storage vessel connected by hard-piping to both the process unit and the storage vessel in the tank farm so that product or raw material entering or leaving the process unit flows into (or from) the intervening storage vessel and does not flow directly into (or from) the storage vessel in the tank farm.

(ii) If there is no process unit at the major source that meets the criteria of paragraph (f)(7)(i) of this section with respect to a storage vessel, this subpart does not apply to the storage vessel.

(iii) If there is only one process unit at the major source that meets the criteria of paragraph (f)(7)(i) of this section with respect to a storage vessel, the storage vessel shall be assigned to that process unit.

(iv) If there are two or more process units at the major source that meet the criteria of paragraph (f)(7)(i) of this section with respect to a storage vessel, the storage vessel shall be assigned to one of those process units according to the provisions of paragraphs (f)(3) through (6) of this section. The predominant use shall be determined among only those process units that meet the criteria of paragraph (f)(7)(i) of this section.

(8) If the storage vessel begins receiving material from (or sending material to) a process unit that was not included in the initial determination, or ceases to receive material from (or send material to) a process unit that was included in the initial determination, the owner or operator shall reevaluate the applicability of this subpart to that storage vessel.

(g) *Changes or additions to plant sites.* The provisions of this paragraph apply to the owner or operator that changes or adds to their plant site or affected source.

(1) *Adding a PMPU to a plant site.* The provisions of paragraphs (g)(1)(i) and (ii) of this section apply to the owner or operator that adds one or more PMPUs to a plant site. A PMPU may be added to a plant site by constructing or reconstructing a process unit to produce polyether polyols. A PMPU may also be added to a plant site due to changes in production (anticipated production or actual past production) such that a polyether polyol becomes the primary product of a process unit that was not previously a PMPU.

(i) If a group of one or more PMPUs is added to a plant site, the added group of one or more PMPUs and their associated equipment, as listed in paragraph (a)(4) of this section, shall be a new affected source and shall comply with the requirements for a new affected source in this subpart upon initial start-up or by June 1, 1999, whichever is later, if the added group of one or more PMPUs meets the criteria specified in paragraph (g)(1)(i)(A) of this section and either meets the criteria in paragraph (g)(1)(i)(B) or (C) of this section.

(A) The process units are new process units, as defined in § 63.1423.

(B) The added group of one or more PMPUs and associated equipment, as listed in paragraph (a)(4) of this section, has the potential to emit 10 tons per year (9.1 megagrams per year) or more of any organic HAP or 25 tons per year (22.7 megagrams per year) or more of any combination of organic HAP, and polyether polyols are currently produced at the plant site as the primary product of an affected source.

(C) A polyether polyol is not currently produced at the plant site as the primary product of an affected source, and the plant site meets, or after the addition is constructed will meet, the General Provisions' definition of a major source in § 63.2.

(ii) If a group of one or more PMPUs is added to a plant site, and the added group of one or more PMPUs does not meet the criteria specified in paragraph (g)(1)(i)(A) of this section and one of the criteria specified in either paragraph (g)(1)(i)(B) or (C) of this section, and the plant site meets, or after the addition will meet, the definition of a major source, the owner or operator of the added group of one or more PMPUs and associated equipment, as

listed in paragraph (a)(4) of this section, shall comply with the requirements for an existing affected source in this subpart upon initial start-up; by June 1, 2002; or by 6 months after notifying the Administrator that a process unit has been designated as a PMPU (in accordance with paragraph (g)(3) of this section), whichever is later.

(2) *Adding emission points or making process changes to existing affected sources.* The provisions of paragraphs (g)(2)(i), (ii), and (iii) of this section apply to the owner or operator that adds emission points or makes process changes to an existing affected source.

(i) If any components are replaced at an existing affected source such that the criteria specified in paragraphs (g)(2)(i)(A) and (B) of this section are met, the entire affected source shall be a new affected source and shall comply with the requirements for a new affected source upon initial start-up or by June 1, 1999, whichever is later.

(A) The replacement of components meets the definition of reconstruction in §63.1423(b). For purposes of determining whether the fixed capital cost of the new components exceeds 50 percent of the fixed capital cost that would be required to construct an entire affected source, the equivalent capital cost shall be the entire potentially affected source; and

(B) Such reconstruction commenced after September 4, 1997.

(ii) If any components are replaced at an existing affected source such that the criteria specified in paragraphs (g)(2)(i)(A) and (B) of this section are not met and that replacement of components creates one or more emission points (*i.e.*, either newly created Group 1 emission points or emission points that change from Group 2 to Group 1) or causes any other emission point to be added (*i.e.*, Group 2 emission points, heat exchange systems subject to §63.1435, or equipment leak components subject §63.1434), the resulting emission point(s) shall be subject to the applicable requirements for an existing affected source. The resulting emission point(s) shall be in compliance upon initial start-up or by the appropriate compliance date specified in §63.1422 (*i.e.*, December 1, 1999 for most equipment leak components subject to §63.1434, and June 1, 2002 for emission points other than equipment leaks), whichever is later.

(iii) If an addition or process change (not including a process change that solely replaces components) is made that creates one or more Group 1 emission points (*i.e.*, either newly created Group 1 emission points or emission points that change group status from Group 2 to Group 1) or causes any other emission point to be added (*i.e.*, Group 2 emission points, heat exchange systems subject to §63.1435, or equipment leak components subject to §63.1434), the resulting emission point(s) shall be subject to the applicable requirements for an existing affected source. The resulting emission point(s) shall be in compliance by initial start-up or by the appropriate compliance date specified in §63.1422 (*i.e.*, December 1, 1999 for most equipment leak components subject to §63.1434, and June 1, 2002 for emission points other than equipment leaks), whichever is later.

(3) *Determining what are and are not process changes.* For purposes of paragraph (g) of this section, examples of process changes include, but are not limited to, additions in process equipment resulting in changes in production capacity; production of a product outside the scope of the compliance demonstration; or whenever there is a replacement, removal, or addition of recovery equipment. For purposes of paragraph (g) of this section, process changes do not include: process upsets, unintentional temporary process changes, and changes that do not alter the equipment configuration and operating conditions.

(4) *Reporting requirements for owners or operators that change or add to their plant site or affected source.* An owner or operator that changes or adds to their plant site or affected source, as discussed in paragraphs (g)(1) and (g)(2) of this section, shall submit a report as specified in §63.1439(e)(7)(iii).

(h) *Applicability of this subpart during periods of start-up, shutdown, malfunction, or non-operation.* Paragraphs (h)(1) through (4) of this section shall be followed during periods of start-up, shutdown, malfunction, and non-operation of the affected source or any part thereof.

(1) The emission limitations set forth in this subpart and the emission limitations referred to in this subpart shall apply at all times except during periods of nonoperation of the affected source (or specific portion thereof) resulting in cessation of the emissions to which this subpart applies. These emission limitations shall not apply during periods of start-up, shutdown, or malfunction, except as provided in paragraphs (h)(3) and (4) of this section. During periods of start-up, shutdown, or malfunction, the owner or operator shall follow the applicable provisions of the start-up, shutdown, and malfunction plan required by § 63.6(e)(3). However, if a start-up, shutdown, malfunction, or period of nonoperation of one portion of an affected source does not affect the ability of a particular emission point to comply with the emission limitations to which it is subject, then that emission point shall still be required to comply with the applicable emission limitations of this subpart during the start-up, shutdown, malfunction, or period of nonoperation. For example, if there is an overpressure in the reactor area, a storage vessel that is part of the affected source would still be required to be controlled in accordance with the storage tank provisions in § 63.1432. Similarly, the degassing of a storage vessel would not affect the ability of a process vent to meet the emission limitations for process vents in §§ 63.1425 through 63.1430.

(2) The emission limitations set forth in 40 CFR part 63, subpart H, as referred to in the equipment leak provisions in § 63.1434, shall apply at all times except during periods of non-operation of the affected source (or specific portion thereof) in which the lines are drained and depressurized resulting in cessation of the emissions to which § 63.1434 applies, or during periods of start-up, shutdown, malfunction, or process unit shutdown (as defined in § 63.161).

(3) The owner or operator shall not shut down items of equipment that are required or utilized for compliance with this subpart during periods of start-up, shutdown, or malfunction during times when emissions (or, where applicable, wastewater streams or residuals) are being routed to such items of equipment if the shutdown would contravene requirements applicable to such items of equipment. This paragraph does not apply if the item of equipment is malfunctioning. This paragraph also does not apply if the owner or operator shuts down the compliance equipment (other than monitoring systems) to avoid damage due to a contemporaneous start-up, shutdown, or malfunction of the affected source or portion thereof. If the owner or operator has reason to believe that monitoring equipment would be damaged due to a contemporaneous start-up, shutdown, or malfunction of the affected source or portion thereof, the owner or operator shall provide documentation supporting such a claim in the Precompliance Report or in a supplement to the Precompliance Report, as provided for in § 63.1439(e)(4). Once approved by the Administrator in accordance with § 63.1439(e)(4)(vii), the provision for ceasing to collect, during a start-up, shutdown, or malfunction, monitoring data that would otherwise be required by the provisions of this subpart shall be incorporated into the start-up, shutdown, malfunction plan for that affected source, as stated in § 63.1439(b)(1).

(4) During start-ups, shutdowns, and malfunctions when the emission limitations of this subpart do not apply pursuant to paragraphs (h)(1) through (3) of this section, the owner or operator shall implement, to the extent reasonably available, measures to prevent or minimize excess emissions to the extent practical. For purposes of this paragraph, the term ''excess emissions'' means emissions greater than those allowed by the emissions limitation which would apply during operational periods other than start-up, shutdown, and malfunction. The measures to be taken shall be identified in the applicable start-up, shutdown, and malfunction plan, and may include, but are not limited to, air pollution control technologies, recovery technologies, work practices, pollution prevention, monitoring, and/or changes in the manner of operation of the affected source. Use of back-up control techniques is

not required, but is allowed, if available.

[64 FR 29439, June 1, 1999, as amended at 65 FR 26498, May 8, 2000]

§ 63.1421 Delegation of authority.

(a) In delegating implementation and enforcement authority to a State under section 112(l) of the Act, the authorities contained in paragraph (b) of this section shall be retained by the Administrator and not transferred to a State.

(b) Authorities which will not be delegated to the States: the permission to use an alternative means of emission limitation, from § 63.6(g), and the authority of § 63.177.

§ 63.1422 Compliance dates and relationship of this rule to existing applicable rules.

(a) [Reserved]

(b) New affected sources that commence construction or reconstruction after September 4, 1997 shall be in compliance with this subpart upon initial start-up or by June 1, 1999, whichever is later.

(c) Existing affected sources shall be in compliance with this subpart (except for § 63.1434 for which compliance is covered by paragraph (d) of this section) no later than June 1, 2002, as provided in § 63.6(c), unless an extension has been granted as specified in paragraph (e) of this section.

(d) Except as provided for in paragraphs (d)(1) through (5) of this section, existing affected sources shall be in compliance with § 63.1434 no later than December 1, 1999 unless an extension has been granted as specified in paragraph (e) of this section.

(1) Compliance with the compressor provisions of § 63.164 shall occur no later than June 1, 2000 for any compressor meeting one or more of the criteria in paragraphs (d)(1)(i) through (iv) of this section, if the work can be accomplished without a process unit shutdown, as defined in § 63.161.

(i) The seal system will be replaced.

(ii) A barrier fluid system will be installed.

(iii) A new barrier fluid will be utilized which requires changes to the existing barrier fluid system.

(iv) The compressor shall be modified to permit connecting the compressor to a closed vent system.

(2) Compliance with the compressor provisions of § 63.164 shall occur no later than December 1, 2000, for any compressor meeting all the criteria in paragraphs (d)(2)(i) through (iv) of this section.

(i) The compressor meets one or more of the criteria specified in paragraphs (d)(1)(i) through (iv) of this section.

(ii) The work can be accomplished without a process unit shutdown as defined in § 63.161.

(iii) The additional time is necessary, due to the unavailability of parts beyond the control of the owner or operator.

(iv) The owner or operator submits the request for a compliance extension to the appropriate U.S. Environmental Protection Agency Regional Office at the addresses listed in § 63.13 no later than 45 days before December 1, 1999. The request for a compliance extension shall contain the information specified in § 63.6(i)(6)(i)(A), (B), and (D). Unless the EPA Regional Office objects to the request for a compliance extension within 30 days after receipt of the request, the request shall be deemed approved.

(3) If compliance with the compressor provisions of § 63.164 cannot reasonably be achieved without a process unit shutdown, as defined in § 63.161, the owner or operator shall achieve compliance no later than June 1, 2001. The owner or operator who elects to use this provision shall submit a request for an extension of compliance in accordance with the requirements of paragraph (d)(2)(iv) of this section.

(4) Compliance with the compressor provisions of § 63.164 shall occur not later than June 1, 2002 for any compressor meeting one or more of the criteria in paragraphs (d)(4)(i) through (iii) of this section. The owner or operator who elects to use these provisions shall submit a request for an extension of compliance in accordance with the requirements of paragraph (d)(2)(iv) of this section.

(i) Compliance cannot be achieved without replacing the compressor.

(ii) Compliance cannot be achieved without recasting the distance piece.

(iii) Design modifications are required to connect to a closed-vent system.

(5) Compliance with the surge control vessel and bottoms receiver provisions of § 63.170 shall occur no later than June 1, 2002.

(e) Pursuant to section 112(i)(3)(B) of the Act, an owner or operator may request an extension allowing the existing affected source up to 1 additional year to comply with section 112(d) standards. For purposes of this subpart, a request for an extension shall be submitted to the permitting authority as part of the operating permit application, or to the Administrator as a separate submittal, or as part of the Precompliance Report. Requests for extensions shall be submitted no later than 120 days prior to the compliance dates specified in paragraphs (b) through (d) of this section, or as specified elsewhere in this subpart. The dates specified in § 63.6(i) for submittal of requests for extensions shall not apply to this subpart.

(1) A request for an extension of compliance shall include the data described in § 63.6(i)(6)(i)(A), (B), and (D).

(2) The requirements in § 63.6(i)(8) through (14) shall govern the review and approval of requests for extensions of compliance with this subpart.

(3) An owner or operator may submit a compliance extension request after the date specified in paragraph (e) of this section, provided that the need for the compliance extension arose after that date, and the need arose due to circumstances beyond reasonable control of the owner or operator. This request shall include, in addition to the information specified in paragraph (e)(1) of this section, a statement of the reasons additional time is needed and the date when the owner or operator first learned of the problem.

(f) Table 1 of this subpart specifies the requirements in 40 CFR part 63, subpart A (the General Provisions) that apply and those that do not apply to owners and operators of affected sources subject to this subpart. For the purposes of this subpart, Table 3 of 40 CFR part 63, subpart F is not applicable.

(g) Table 2 of this subpart summarizes the provisions of 40 CFR part 63, subparts F, G, and H (collectively known as the ''HON'') that apply and those that do not apply to owners and operators of affected sources subject to this subpart.

(h) [Reserved]

(i) After the compliance dates specified in this section, a storage vessel that is assigned to an affected source subject to this subpart that is also subject to the 40 CFR part 60, subpart Kb (Standards of Performance for Volatile Organic Liquid Storage Vessels (Including Petroleum Liquid Storage Vessels) for Which Construction, Reconstruction, or Modification Commenced after July 23, 1984) is required to comply only with the provisions of this subpart. After the compliance dates specified in this section, that storage vessel shall no longer be subject to 40 CFR part 60, subpart Kb.

(j) After the compliance dates specified in this subpart, if any combustion device, recovery device or recapture device subject to this subpart is also subject to monitoring, recordkeeping, and reporting requirements for hazardous waste, disposal, and treatment facilities in 40 CFR part 264, subpart AA (Air Emission Standards for Process Vents) or subpart CC (Air Emission Standards for Tanks, Surface Impoundment, and Containers), the owner or operator may comply with either paragraph (j)(1) or (2) of this section. If, after the compliance dates specified in this subpart, any combustion device, recovery device, or recapture device subject to this subpart is subject to monitoring and recordkeeping requirements hazardous waste treatment, storage, and disposal facilities in 40 CFR part 265, subpart AA (Air Emission Standards for Process Vents) or subpart CC (Air Emission Standards for Tanks, Surface Impoundments, and Containers), the owner or operator may comply with either paragraph (j)(1) or (3) of this section. If the owner or operator elects to comply with either paragraph (j)(2) or (3) of this section, the owner or operator shall notify the Administrator of this choice in the Notification of Compliance Status required by § 63.1439(e)(5).

(1) The owner or operator shall comply with the monitoring, recordkeeping and reporting requirements of this subpart.

(2) The owner or operator shall comply with the monitoring, recordkeeping and reporting requirements in 40 CFR part 264, with the following exception. All excursions, as defined in § 63.1438(f), shall be reported in the periodic report. Compliance with this paragraph shall constitute compliance with the monitoring, recordkeeping and reporting requirements of this subpart.

(3) The owner or operator shall comply with the monitoring and recordkeeping requirements of 40 CFR part 265, subpart AA or subpart CC, and the periodic reporting requirements under 40 CFR part 264, subpart AA or subpart CC, that would apply to the device if the facility had final-permitted status, with the following exception. All excursions, as defined in § 63.1438(f), shall be reported in the periodic report. Compliance with this paragraph shall constitute compliance with the monitoring, recordkeeping and reporting requirements of this subpart.

(k) Paragraphs (k)(1) and (2) of this section address instances in which requirements from other regulations overlap for the same heat exchange system(s) or waste management unit(s) that are subject to this subpart.

(1) After the applicable compliance date specified in this subpart, if a heat exchange system subject to this subpart is also subject to a standard identified in paragraph (k)(1)(i) or (ii) of this section, compliance with the applicable provisions of the standard identified in paragraph (k)(1)(i) or (ii) shall constitute compliance with the applicable provisions of this subpart with respect to that heat exchange system.

(i) 40 CFR part 63, subpart F.

(ii) A subpart of this part which requires compliance with the HON heat exchange system requirements in § 63.104 (e.g., 40 CFR part 63, subpart JJJ or U).

(2) After the applicable compliance date specified in this subpart, if any waste management unit subject to this subpart is also subject to a standard identified in paragraph (k)(2)(i) or (ii) of this section, compliance with the applicable provisions of the standard identified in paragraph (k)(2)(i) or (ii) shall constitute compliance with the applicable provisions of this subpart with respect to that waste management unit.

(i) 40 CFR part 63, subpart G.

(ii) A subpart of this part which requires compliance with the HON process wastewater provisions in §§ 63.132 through 63.147 (e.g., subpart JJJ or U).

(l) All terms in this subpart that define a period of time for completion of required tasks (e.g., monthly, quarterly, annual), unless specified otherwise in the section or subsection that imposes the requirement, refer to the standard calendar periods, unless altered by mutual agreement between the owner or operator and the Administrator in accordance with paragraph (l)(1) of this section.

(1) Notwithstanding time periods specified in this subpart for completion of required tasks, such time periods may be changed by mutual agreement between the owner or operator and the Administrator, as specified in the General Provisions in 40 CFR part 63, subpart A (e.g., a period could begin on the compliance date or another date, rather than on the first day of the standard calendar period). For each time period that is changed by agreement, the revised period shall remain in effect until it is changed. A new request is not necessary for each recurring period.

(2) Where the period specified for compliance is a standard calendar period, if the initial compliance date occurs after the beginning of the period, compliance shall be required according to the schedule specified in paragraphs (l)(2)(i) or (ii) of this section, as appropriate.

(i) Compliance shall be required before the end of the standard calendar period within which the compliance deadline occurs, if there remains at least 2 weeks for tasks that shall be performed monthly, at least 1 month for tasks that shall be performed each quarter, or at least 3 months for tasks that shall be performed annually; or

(ii) In all other cases, compliance shall be required before the end of the first full standard calendar period after the period within which the initial compliance deadline occurs.

(3) In all instances where a provision of this subpart requires completion of a task during each of multiple successive

periods, an owner or operator may perform the required task at any time during the specified period, provided that the task is conducted at a reasonable interval after completion of the task during the previous period.

[64 FR 29439, June 1, 1999, as amended at 65 FR 26499, May 8, 2000]

§ 63.1423 Definitions.

(a) The following terms used in this subpart shall have the meaning given them in subparts A (§ 63.2), F (§ 63.101), G (§ 63.111), and H (§ 63.161) as specified after each term:

Act (subpart A)
Administrator (subpart A)
Automated monitoring and recording system (subpart G)
Boiler (subpart G)
Bottoms receiver (subpart H)
By-product (subpart F)
Car-seal (subpart G)
Closed-vent system (subpart G)
Combustion device (subpart G)
Commenced (subpart A)
Compliance date (subpart A)
Continuous monitoring system (subpart A)
Emission standard (subpart A)
EPA (subpart A)
Equipment (subpart H)
Flow indicator (subpart G)
Fuel gas (subpart F)
Fuel gas system (subpart F)
Hard-piping (subpart G)
Heat exchange system (subpart F)
Impurity (subpart F)
Incinerator (subpart G)
Major source (subpart A)
Malfunction (subpart A)
Oil-water separator or organic-water separator (subpart G)
Open-ended valve or line (subpart H)
Operating permit (subpart F)
Organic monitoring device (subpart G)
Owner or operator (subpart A)
Performance evaluation (subpart A)
Performance test (subpart A)
Permitting authority (subpart A)
Plant site (subpart F)
Potential to emit (subpart A)
Primary fuel (subpart G)
Process heater (subpart G)
Process unit shutdown (subpart H)
Reactor (subpart G)
Recapture device (subpart G)
Relief valve (subpart G)
Research and development facility (subpart F)
Responsible official (subpart A)
Run (subpart A)
Secondary fuel (subpart G)
Sensor (subpart H)
Specific gravity monitoring device (subpart G)
Start-up, shutdown, and malfunction plan (subpart F)
State (subpart A)
Surge control vessel (subpart H)
Temperature monitoring device (subpart G)
Test method (subpart A)
Total resource effectiveness index value (subpart G)
Treatment process (subpart G)
Visible emission (subpart A)

(b) All other terms used in this subpart shall have the meaning given them in this section.

Annual average concentration, as used in conjunction with the wastewater provisions, means the flow-weighted annual average concentration and is determined by the procedures in § 63.144(b), except as provided in § 63.1433(a)(2).

Annual average flow rate, as used in conjunction with the wastewater provisions, is determined by the procedures in § 63.144(c).

Batch cycle means the step or steps, from start to finish, that occur in a batch unit operation.

Batch unit operation means a unit operation involving intermittent or discontinuous feed into equipment, and, in general, involves the emptying of equipment after the batch cycle ceases and prior to beginning a new batch cycle. Mass, temperature, concentration and other properties of the process may vary with time. Addition of raw material and withdrawal of product do not simultaneously occur in a batch unit operation.

Catalyst extraction means the removal of the catalyst using either solvent or physical extraction method.

Construction means the on-site fabrication, erection, or installation of an affected source. Construction also means the on-site fabrication, erection, or installation of a process unit or a combination of process units which subsequently becomes an affected

source or part of an affected source due to a change in primary product.

Continuous record means documentation, either in hard copy or computer readable form, of data values measured at least once during approximately equal intervals of 15 minutes and recorded at the frequency specified in § 63.1439(d).

Continuous recorder is defined in § 63.111, except that when the definition in § 63.111 reads ''or records 15-minute or more frequent block average values,'' the phrase ''or records 1-hour or more frequent block average values'' shall apply for purposes of this subpart.

Continuous unit operation means a unit operation where the inputs and outputs flow continuously. Continuous unit operations typically approach steady-state conditions. Continuous unit operations typically involve the simultaneous addition of raw material and withdrawal of the product.

Control technique means any equipment or process control used for capturing, recovering, or oxidizing organic hazardous air pollutant vapors. Such equipment includes, but is not limited to, absorbers, adsorbers, boilers, condensers, flares, incinerators, process heaters, and scrubbers, or any combination thereof. Process control includes extended cookout (as defined in this section). Condensers operating as reflux condensers that are necessary for processing, such as liquid level control, temperature control, or distillation operation, shall be considered inherently part of the process and will not be considered control techniques.

Emission point means an individual process vent, storage vessel, wastewater stream, or equipment leak.

Epoxide means a chemical compound consisting of a three-membered cyclic ether. Only emissions of epoxides listed in Table 4 of this subpart (*i.e.*, ethylene oxide, propylene oxide, and epichlorohydrin) are regulated by the provisions of this subpart.

Equipment leak means emissions of organic HAP from a connector, pump, compressor, agitator, pressure relief device, sampling connection system, open-ended valve or line, valve, surge control vessel, bottoms receiver, or instrumentation system in organic HAP service.

Extended Cookout (ECO) means a control technique that reduces the amount of unreacted ethylene oxide (EO) and/or propylene oxide (PO) (epoxides) in the reactor. This is accomplished by allowing the product to react for a longer time period, thereby having less unreacted epoxides and reducing epoxides emissions that may have otherwise occurred.

Flexible operation unit means a process unit that manufactures different chemical products by periodically alternating raw materials fed to the process unit or operating conditions at the process unit. These units are also referred to as campaign plants or blocked operations.

Group 1 combination of batch process vents means a collection of process vents in a PMPU from batch unit operations that are associated with the use of a nonepoxide organic HAP to make or modify the product that meet all of the following conditions:

(1) Has annual nonepoxide organic HAP emissions, determined in accordance with § 63.1428(b), of 11,800 kg/yr or greater, and

(2) Has a cutoff flow rate, determined in accordance with § 63.1428(e), that is greater than or equal to the annual average flow rate, determined in accordance with § 63.1428(d).

Group 2 combination of batch process vents means a collection of process vents in a PMPU from batch unit operations that are associated with the use of a nonepoxide organic HAP to make or modify the product that is not classified as a Group 1 combination of batch process vents.

Group 1 continuous process vent means a process vent from a continuous unit operation that is associated with the use of a nonepoxide organic HAP to make or modify the product that meets all of the following conditions:

(1) Has a flow rate greater than or equal to 0.005 standard cubic meters per minute,

(2) Has a total organic HAP concentration greater than or equal to 50 parts per million by volume, and

(3) Has a total resource effectiveness index value, calculated in accordance with § 63.1428(h)(1), less than or equal to 1.0.

Group 2 continuous process vent means a process vent from a continuous unit operation that is associated with the use of a nonepoxide organic HAP to make or modify the product that is not classified as a Group 1 continuous process vent.

Group 1 storage vessel means a storage vessel that meets the applicability criteria specified in Table 3 of this subpart.

Group 2 storage vessel means a storage vessel that does not fall within the definition of a Group 1 storage vessel.

Group 1 wastewater stream means a process wastewater stream at an existing or new affected source that meets the criteria for Group 1 status in § 63.132(c), with the exceptions listed in § 63.1433(a)(2) for the purposes of this subpart (i.e., for organic HAP listed on Table 4 of this subpart only).

Group 2 wastewater stream means any process wastewater stream at an existing affected source or new affected source that does not meet the definition (in this section) of a Group 1 wastewater stream.

In organic hazardous air pollutant service or in organic HAP service means that a piece of equipment either contains or contacts a fluid (liquid or gas) that is at least 5 percent by weight of total organic HAP (as defined in this section), as determined according to the provisions of § 63.180(d). The provisions of § 63.180(d) also specify how to determine that a piece of equipment is not in organic HAP service.

Initial start-up means the first time a new or reconstructed affected source begins production, or, for equipment added or changed as described in § 63.1420(g), the first time the equipment is put into operation to produce a polyether polyol. Initial start-up does not include operation solely for testing equipment. Initial start-up does not include subsequent start-ups of an affected source or portion thereof following malfunctions or shutdowns or following changes in product for flexible operation units. Further, for purposes of § 63.1422, initial start-up does not include subsequent start-ups of affected sources or portions thereof following malfunctions or process unit shutdowns.

Maintenance wastewater is defined in § 63.101, except that the term ''polyether polyol manufacturing process unit'' shall apply whenever the term ''chemical manufacturing process unit'' is used. Further, the generation of wastewater from the routine rinsing or washing of equipment in batch operation between batches is not maintenance wastewater, but is considered to be process wastewater, for the purposes of this subpart.

Make or modify the product means to produce the polyether polyol by polymerization of epoxides or other cyclic ethers with compounds having one or more reactive hydrogens, and to incorporate additives (e.g., preservatives, antioxidants, or diluents) in order to maintain the quality of the finished products before shipping. Making and modifying the product for this regulation does not include grafting, polymerizing the polyol, or reacting it with compounds other than EO or PO.

Maximum true vapor pressure is defined in § 63.111, except that the terms ''transfer'' and ''transferred'' shall not apply for the purposes of this subpart.

New process unit means a process unit for which the construction or reconstruction commenced after September 4, 1997.

On-site or on site means, with respect to records required to be maintained by this subpart or required by another subpart referenced by this subpart, a location within the plant site where the affected source is located. On-site storage of records includes, but is not limited to, a location at the affected source or PMPU to which the records pertain or a location elsewhere at the plant site where the affected source is located.

Operating day refers to the 24-hour period defined by the owner or operator in the Notification of Compliance Status required by § 63.1439(e)(5). That 24-hour period may be from midnight to midnight or another 24-hour period. The operating day is the 24-hour period for which daily average monitoring values are determined.

Organic hazardous air pollutant(s) (organic HAP) means one or more of the chemicals listed in Table 4 of this subpart, or any other chemical which:

(1) Is knowingly produced or introduced into the manufacturing process other than as an impurity; and

(2) Is listed in Table 2 of 40 CFR part 63, subpart F in the HON.

Polyether polyol means a compound formed through the polymerization of EO or PO or other cyclic ethers with compounds having one or more reactive hydrogens (*i.e.,* a hydrogen atom bonded to nitrogen, oxygen, phosphorus, sulfur, etc.) to form polyethers (i.e., compounds with two or more ether bonds). This definition of *polyether polyol* excludes cellulose ethers (such as methyl cellulose, carboxymethyl cellulose, hydroxyethyl cellulose, hydroxy ethyl cellulose, and hydroxypropyl methyl cellulose) and materials regulated under 40 CFR part 63, subparts F, G, and H (the HON), such as glycols and glycol ethers.

Polyether polyol manufacturing process unit (PMPU) means a process unit that manufactures a polyether polyol as its primary product, or a process unit designated as a polyether polyol manufacturing unit in accordance with §63.1420(e)(2). A polyether polyol manufacturing process unit consists of more than one unit operation. This collection of equipment includes purification systems, reactors and their associated product separators and recovery devices, distillation units and their associated distillate receivers and recovery devices, other associated unit operations, storage vessels, surge control vessels, bottoms receivers, product transfer racks, connected ducts and piping, combustion, recovery, or recapture devices or systems, and the equipment (i.e., all pumps, compressors, agitators, pressure relief devices, sampling connection systems, open-ended valves or lines, valves, connectors, and instrumentation systems that are associated with the PMPU) that are subject to the equipment leak provisions as specified in §63.1434.

Pressure decay curve is the graph of the reactor pressure versus time from the point when epoxide feed is stopped until the reactor pressure is constant, indicating that most of the epoxide has reacted out of the vapor and liquid phases. This curve shall be determined with no leaks or vents from the reactor.

Primary product is defined in and determined by the procedures specified in §63.1420(e).

Process unit means a collection of equipment assembled and connected by pipes or ducts to process raw materials and to manufacture a product.

Process vent means a point of emission from a unit operation having a gaseous stream that is discharged to the atmosphere either directly or after passing through one or more combustion, recovery, or recapture devices. A process vent from a continuous unit operation is a gaseous emission stream containing more than 0.005 weight-percent total organic HAP. A process vent from a batch unit operation is a gaseous emission stream containing more than 225 kilograms per year (500 pounds per year) of organic HAP emissions. Unit operations that may have process vents are condensers, distillation units, reactors, or other unit operations within the PMPU. Process vents exclude pressure relief valve discharges, gaseous streams routed to a fuel gas system(s), and leaks from equipment regulated under §63.1434. A gaseous emission stream is no longer considered to be a process vent after the stream has been controlled and monitored in accordance with the applicable provisions of this subpart.

Process wastewater means wastewater which, during manufacturing or processing, comes into direct contact with or results from the production or use of any raw material, intermediate product, finished product, by-product, or waste product. Examples are product tank drawdown or feed tank drawdown; water formed during a chemical reaction or used as a reactant; water used to wash impurities from organic products or reactants; equipment washes between batches in a batch process; water used to cool or quench organic vapor streams through direct contact; and condensed steam from jet ejector systems pulling vacuum on vessels containing organics.

Product means a compound or material which is manufactured by a process unit. By-products, isolated intermediates, impurities, wastes, and trace contaminants are not considered products.

Product class means a group of polyether polyols with a similar pressure decay curve (or faster pressure decay curves) that are manufactured within a given set of operating conditions representing the decline in pressure versus time. All products within a product class shall have an essentially similar pressure decay curve, and operate within a given set of operating conditions. These operating conditions are: a minimum reaction temperature; the number of -OH groups in the polyol; a minimum catalyst concentration; the type of catalyst (e.g., self-catalyzed, base catalyst, or acid catalyst); the epoxide ratio, or a range for that ratio; and the reaction conditions of the system (e.g., the size of the reactor, or the size of the batch).

Reactor liquid means the compound or material made in the reactor, even though the substance may be transferred to another vessel. This material may require further modifications before becoming a final product, in which case the reactor liquid is classified as an ''intermediate.'' This material may be complete at this stage, in which case the reactor liquid is classified as a ''product.''

Reconstruction means the replacement of components of an affected source or of a previously unaffected stationary source that becomes an affected source as a result of the replacement, to such an extent that:

(1) The fixed capital cost of the new components exceeds 50 percent of the fixed capital cost that would be required to construct a comparable new source; and

(2) It is technologically and economically feasible for the reconstructed source to meet the provisions of this subpart.

Recovery device means an individual unit of equipment capable of and normally used for the purpose of recovering chemicals for fuel value (i.e., net positive heating value), use, reuse, or for sale for fuel value, use, or reuse. Examples of equipment that may be recovery devices include absorbers, carbon adsorbers, condensers (except reflux condensers), oil-water separators or organic-water separators, or organic removal devices such as decanters, strippers, or thin film evaporation units. For the purposes of the monitoring, recordkeeping, or reporting requirements of this subpart, recapture devices are considered to be recovery devices.

Residual is defined in § 63.111, except that when the definition in § 63.111 uses the term ''Table 9 compounds,'' the term ''organic HAP listed in Table 9 of subpart G'' shall apply, for the purposes of this subpart.

Shutdown means the cessation of operation of an affected source, a PMPU within an affected source, a waste management unit or unit operation within an affected source, equipment required or used to comply with this subpart, or the emptying or degassing of a storage vessel. The purposes for a shutdown may include, but are not limited to, periodic maintenance, replacement of equipment, or equipment repairs. Shutdown does not include the normal periods between batch cycles. For continuous unit operations, shutdown includes transitional conditions due to changes in product for flexible operation units. For batch unit operations, shutdown does not include transitional conditions due to changes in product for flexible operation units. For purposes of the wastewater provisions, shutdown does not include the routine rinsing or washing of equipment between batch cycles.

Start-up means the setting into operation of an affected source, a PMPU within the affected source, a waste management unit or unit operation within an affected source, equipment required or used to comply with this subpart, or a storage vessel after emptying and degassing. For all processes, start-up includes initial start-up and operation solely for testing equipment. Start-up does not include the recharging of batch unit operations. For continuous unit operations, start-up includes transitional conditions due to changes in product for flexible operation units. For batch unit operations, start-up does not include transitional conditions due to changes in product for flexible operation units.

Steady-state conditions means that all variables (temperatures, pressures, volumes, flow rates, etc.) in a process do not vary significantly with time; minor

fluctuations about constant mean values may occur.

Storage vessel means a tank or other vessel that is used to store liquids that contain one or more organic HAP. Storage vessels do not include:

(1) Vessels permanently attached to motor vehicles such as trucks, railcars, barges, or ships;

(2) Pressure vessels designed to operate in excess of 204.9 kilopascals and without emissions to the atmosphere;

(3) Vessels with capacities smaller than 38 cubic meters;

(4) Vessels and equipment storing and/or handling material that contains no organic HAP, or organic HAP as impurities only;

(5) Surge control vessels and bottoms receiver tanks;

(6) Wastewater storage tanks; and

(7) Storage vessels assigned to another process unit regulated under another subpart of part 63.

Total organic compounds (TOC) are those compounds, excluding methane and ethane, measured according to the procedures of Method 18 or Method 25A of 40 CFR part 60, appendix A.

Unit operation means one or more pieces of process equipment used to make a single change to the physical or chemical characteristics of one or more process streams. Unit operations include, but are not limited to, reactors, distillation units, extraction columns, absorbers, decanters, condensers, and filtration equipment.

Vent stream, as used in reference to process vents, means the emissions from a process vent.

Waste management unit is defined in §63.111, except that when the definition in §63.111 uses the term ''chemical manufacturing process unit,'' the term ''PMPU'' shall apply for the purposes of this subpart.

Wastewater means water that:

(1) Contains either

(i) An annual average concentration of organic HAP listed in Table 4 of this subpart of at least 5 parts per million by weight and has an annual average flow rate of 0.02 liter per minute or greater, or

(ii) An annual average concentration of organic HAP listed on Table 4 of this subpart of at least 10,000 parts per million by weight at any flow rate; and that

(2) Is discarded from a PMPU that is part of an affected source. Wastewater is process wastewater or maintenance wastewater.

[64 FR 29439, June 1, 1999, as amended at 65 FR 26499, May 8, 2000]

§63.1424 Emission standards.

(a) Except as provided under paragraph (b) of this section, the owner or operator of an existing or new affected source shall comply with the provisions in:

(1) Sections 63.1425 through 63.1430 for process vents;

(2) Section 63.1432 for storage vessels;

(3) Section 63.1433 for wastewater;

(4) Section 63.1434 for equipment leaks;

(5) Section 63.1435 for heat exchangers;

(6) Section 63.1437 for additional test methods and procedures;

(7) Section 63.1438 for monitoring levels and excursions; and

(8) Section 63.1439 for general reporting and recordkeeping requirements.

(b) When emissions of different kinds (i.e., emissions from process vents subject to §§63.1425 through 63.1430, storage vessels subject to §63.1432, process wastewater, and/or in-process equipment subject to §63.149) are combined, and at least one of the emission streams would require control according to the applicable provision in the absence of combination with other emission streams, the owner or operator shall comply with the requirements of either paragraph (b)(1) or (2) of this section.

(1) Comply with the applicable requirements of this subpart for each kind of emission in the stream as specified in paragraphs (a)(1) through (5) of this section; or

(2) Comply with the most stringent set of requirements that applies to any individual emission stream that is included in the combined stream, where either that emission stream would be classified as requiring control in the absence of combination with other emission streams, or the owner chooses to consider that emission stream to require control for the purposes of this paragraph.

§ 63.1425 Process vent control requirements.

(a) *Applicability of process vent control requirements.* For each process vent at an affected source, the owner or operator shall comply with the provisions of this section. Owners and operators of all affected sources using epoxides in the production of polyether polyols are subject to the requirements of paragraph (b) of this section. Owners or operators are subject to the requirements of paragraph (c) of this section only if epoxides are used in the production of polyether polyols and nonepoxide organic HAP are used to make or modify the product. Similarly, owners or operators are subject to the requirements of paragraph (d) of this section only if epoxides are used in the production of polyether polyols and organic HAP are used in catalyst extraction. The owner or operator of an affected source where polyether polyol products are produced using tetrahydrofuran shall comply with paragraph (f) of this section.

(b) *Requirements for epoxide emissions.* The owner or operator of an affected source where polyether polyol products are produced using epoxides shall reduce epoxide emissions from process vents from batch unit operations and continuous unit operations within each PMPU in accordance with either paragraph (b)(1) or (2) of this section.

(1) For new affected sources, the owner or operator shall comply with paragraph (b)(1)(i), (ii), or (iii) this section. The owner or operator also has the option of complying with a combination of paragraphs (b)(1)(i) and (ii) of this section. If the owner or operator chooses to comply with a combination of paragraphs (b)(1)(i) and (ii) of this section, each process vent not controlled in accordance with paragraph (b)(1)(ii) of this section shall be part of the group of applicable process vents that shall then comply with paragraph (b)(1)(i) of this section.

(i) Reduce the total epoxide emissions from the group of applicable process vents by an aggregated 99.9 percent;

(ii) Maintain an outlet concentration of total epoxides or TOC after each combustion, recapture, or recovery device of 20 ppmv or less; or

(iii) Maintain an emission factor of no greater than 4.43×10^{-3} kilogram epoxide emissions per megagram of product (4.43×10^{-3} pounds epoxide emissions per 1,000 pounds of product) for all process vents in the PMPU.

(2) For existing affected sources, the owner or operator shall comply with either paragraph (b)(2)(i), (ii), (iii), or (iv) of this section. The owner or operator also has the option of complying with a combination of paragraphs (b)(2)(ii) and (iii) of this section. If the owner or operator chooses to comply with a combination of paragraphs (b)(2)(ii) and (iii) of this section, each process vent that is not controlled in accordance with paragraph (b)(2)(iii) of this section shall be part of the group of applicable process vents that shall then comply with paragraph (b)(2)(ii) of this section. The owner or operator also has the option of complying with a combination of paragraphs (b)(2)(i) and (iii) of this section.

(i) Reduce the total epoxide emissions from each process vent using a flare;

(ii) Reduce the total epoxide emissions from the group of applicable process vents by an aggregated 98 percent;

(iii) Maintain an outlet concentration of total epoxides or TOC after each combustion, recapture or recovery devices of 20 ppmv or less; or

(iv) Maintain an emission factor of no greater than 1.69×10^{-2} kilogram epoxide emissions per megagram of product (1.69×10^{-2} pounds epoxide emissions per 1,000 pounds of product) for all process vents in the PMPU.

(c) *Requirements for nonepoxide organic HAP emissions from making or modifying the product.* The owner or operator of a new or existing source where polyether polyols are produced using epoxides, and where nonepoxide organic HAP are used to make or modify the product, shall comply with this paragraph. For each process vent from a continuous unit operation that is associated with the use of a nonepoxide organic HAP to make or modify the product, the owner or operator shall determine if the process vent is a Group 1 continuous process vent, as defined in § 63.1423. For the combination of process vents from

batch unit operations that are associated with the use of a nonepoxide organic HAP to make or modify the product, the owner or operator shall determine if the combination of process vents is a Group 1 combination of batch process vents, as defined in §63.1423.

(1) *Requirements for Group 1 combinations of batch process vents.* For each Group 1 combination of batch process vents, as defined in §63.1423, the owner or operator shall comply with either paragraph (c)(1)(i) or (ii) of this section.

(i) Reduce nonepoxide organic HAP emissions using a flare.

(ii) Reduce nonepoxide organic HAP emissions by 90 percent using a combustion, recovery, or recapture device.

(2) *Requirements for Group 2 combinations of batch process vents.* For each Group 2 combination of batch process vents, as defined in §63.1423, the owner or operator reassess the group status when process changes occur, in accordance with the provisions of §63.1428(g). No control requirements apply to these process vents.

(3) *Requirements for Group 1 continuous process vents.* For each Group 1 continuous process vent, as defined in §63.1423, the owner or operator shall comply with either paragraph (c)(3)(i) or (ii) of this section.

(i) Reduce nonepoxide organic HAP emissions using a flare.

(ii) Reduce nonepoxide organic HAP emissions by 98 percent using a combustion, recovery, or recapture device.

(4) *Requirements for Group 2 continuous process vents.* For each Group 2 continuous process vent, as defined in §63.1423, the owner or operator shall comply with either paragraph (c)(4)(i) or (ii) of this section.

(i) If the TRE for the process vent is greater than 1.0 but less than 4.0, the owner or operator shall comply with the monitoring provisions in §63.1429, the recordkeeping provisions in §63.1430(d), and recalculate the TRE index value when process changes occur, in accordance with the provisions in §63.1428(h)(2).

(ii) If the TRE for the process vent is greater than 4.0, the owner or operator shall recalculate the TRE index value when process changes occur, in accordance with the provisions in §63.1428(h)(2).

(d) *Requirements for nonepoxide organic HAP emissions from catalyst extraction.* The owner or operator of a new or existing affected source where polyether polyol products are produced using epoxide compounds shall comply with either paragraph (d)(1) or (2) of this section. A PMPU that does not use any nonepoxide organic HAP in catalyst extraction is exempt from the requirements of this paragraph.

(1) Reduce emissions of nonepoxide organic HAP from all process vents associated with catalyst extraction using a flare; or

(2) Reduce emissions of nonepoxide organic HAP from the sum total of all process vents associated with catalyst extraction by an aggregated 90 percent for each PMPU.

(e) [Reserved]

(f) *Requirements for process vents at PMPUs that produce polyether polyol products using tetrahydrofuran.* For each process vent in a PMPU that uses tetrahydrofuran (THF) to produce one or more polyether polyol products that is, or is part of, an affected source, the owner or operator shall comply with the HON process vent requirements in §§63.113 through 63.118, except as provided for in paragraphs (f)(1) through (10) of this section.

(1) When December 31, 1992 is referred to in the HON process vent requirements in §63.113, it shall be replaced with September 4, 1997, for the purposes of this subpart.

(2) When §63.151(f), alternative monitoring parameters, and §63.152(e), submission of an operating permit application, are referred to in §§63.114(c) and 63.117(e), §63.1439(f), alternative monitoring parameters, and §63.1439(e)(8), submission of an operating permit application, respectively, shall apply for the purposes of this subpart.

(3) When the Notification of Compliance Status requirements contained in §63.152(b) are referred to in §§63.114, 63.117, and 63.118, the Notification of Compliance Status requirements contained in §63.1439(e)(5) shall apply for the purposes of this subpart.

(4) When the Periodic Report requirements contained in § 63.152(c) are referred to in §§ 63.117 and 63.118, the Periodic Report requirements contained in § 63.1439(e)(6) shall apply for the purposes of this subpart.

(5) When the definition of excursion in § 63.152(c)(2)(ii)(A) is referred to in § 63.118(f)(2), the definition of excursion in § 63.1438(f) shall apply for the purposes of this subpart.

(6) When § 63.114(e) specifies that an owner or operator shall submit the information required in § 63.152(b) in order to establish the parameter monitoring range, the owner or operator shall comply with the provisions of § 63.1438 for establishing the parameter monitoring level and shall comply with § 63.1439(e)(5)(ii) or § 63.1439(e)(8) for the purposes of reporting information related to the establishment of the parameter monitoring level, for the purposes of this subpart. Further, the term ''level'' shall apply whenever the term ''range'' is used in §§ 63.114, 63.117, and 63.118.

(7) When reports of process changes are required under § 63.118(g), (h), (i), or (j), paragraphs (f)(7)(i) through (iv) of this section shall apply for the purposes of this subpart.

(i) For the purposes of this subpart, whenever a process change, as defined in § 63.115(e), is made that causes a Group 2 process vent to become a Group 1 process vent, the owner or operator shall submit a report within 180 days after the process change is made or the information regarding the process change is known to the owner or operator. This report may be included in the next Periodic Report. A description of the process change shall be included in this report.

(ii) Whenever a process change, as defined in § 63.115(e), is made that causes a Group 2 process vent with a TRE greater than 4.0 to become a Group 2 process vent with a TRE less than 4.0, the owner or operator shall submit a report within 180 days after the process change is made or the information regarding the process change is known to the owner or operator, unless the flow rate is less than 0.005 standard cubic meters per minute. This report may be included in the next Periodic Report. A description of the process change shall be included in this report.

(iii) Whenever a process change, as defined in § 63.115(e), is made that causes a Group 2 process vent with a flow rate less than 0.005 standard cubic meter per minute (scmm) to become a Group 2 process vent with a flow rate of 0.005 scmm or greater and a TRE index value less than or equal to 4.0, the owner or operator shall submit a report within 180 days after the process change is made or the information regarding the process change is known to the owner or operator, unless the organic HAP concentration is less than 50 ppmv. This report may be included in the next Periodic Report. A description of the process change shall be submitted with the report.

(iv) Whenever a process change, as defined in § 63.115(e), is made that causes a Group 2 process vent with an organic HAP concentration less than 50 parts per million by volume (ppmv) to become a Group 2 process vent with an organic HAP concentration of 50 ppmv or greater and a TRE index value less than or equal to 4.0, the owner or operator shall submit a report within 180 days after the process change is made or the information regarding the process change is known to the owner or operator, unless the flow rate is less than 0.005 standard cubic meters per minute. This report may be included in the next Periodic Report. A description of the process change shall be submitted with this report.

(8) When § 63.118 refers to § 63.152(f), the recordkeeping requirements in § 63.1439(d) shall apply for the purposes of this subpart.

(9) When §§ 63.115 and 63.116 refer to Table 2 of 40 CFR part 63, subpart F, the owner or operator shall only consider organic HAP as defined in this subpart.

(10) When the provisions of § 63.116(c)(3) and (4) specify that Method 18, 40 CFR part 60, appendix A shall be used, Method 18 or Method 25A, 40 CFR part 60, appendix A may be used for the purposes of this subpart. The use of Method 25A, 40 CFR part 60, appendix A shall comply with paragraphs (f)(10)(i) and (ii) of this section.

(i) The organic HAP used as the calibration gas for Method 25A, 40 CFR

part 60, appendix A shall be the single organic HAP representing the largest percent by volume of the emissions.

(ii) The use of Method 25A, 40 CFR part 60, appendix A is acceptable if the response from the high-level calibration gas is at least 20 times the standard deviation of the response from the zero calibration gas when the instrument is zeroed on the most sensitive scale.

§63.1426 Process vent requirements for determining organic HAP concentration, control efficiency, and aggregated organic HAP emission reduction for a PMPU.

(a) *Use of a flare.* When a flare is used to comply with §63.1425(b)(1)(i) (in combination with other control techniques), (b)(2)(i), (c)(1)(i), (c)(3)(i), or (d)(1), the owner or operator shall comply with §63.1437(c), and is not required to demonstrate the control efficiency for the flare, if the owner or operator chooses to assume a 98 percent control efficiency for that flare, as allowed under paragraph (e)(2)(i) of this section. In order to use only a flare to comply with §63.1425(b)(1)(i), or to use a flare and apply a control efficiency greater than 98 percent, an owner or operator shall submit a request in accordance with §63.6(g) in either the Precompliance Report described in §63.1439(e)(4), or in a supplement to the precompliance report, as described in §63.1439(e)(4)(vii).

(b) *Exceptions to performance tests.* An owner or operator is not required to conduct a performance test when a combustion, recovery, or recapture device specified in paragraphs (b)(1) through (6) of this section is used to comply with §63.1425(b), (c), or (d).

(1) A boiler or process heater with a design heat input capacity of 44 megawatts or greater.

(2) A boiler or process heater where the process vent stream is introduced with the primary fuel or is used as the primary fuel.

(3) A combustion, recovery, or recapture device for which a performance test was conducted within the preceding 5-year period, using the same Methods specified in this section and either no deliberate process changes have been made since the test, or the owner or operator can demonstrate that the results of the performance test, with or without adjustments, reliably demonstrate compliance despite process changes. The operating parameters reported under the previous performance test shall be sufficient to meet the parameter monitoring requirements in this subpart.

(4) A boiler or process heater burning hazardous waste for which the owner or operator:

(i) Has been issued a final hazardous waste permit under 40 CFR part 270 and complies with the requirements for hazardous waste burned in boilers and industrial furnaces in 40 CFR part 266, subpart H; or

(ii) Has certified compliance with the interim status requirements for hazardous waste burned in boilers and industrial furnaces in of 40 CFR part 266, subpart H.

(5) A hazardous waste incinerator for which the owner or operator has been issued a final permit under 40 CFR part 270 and complies with the requirements for incinerators in 40 CFR part 264, subpart O, or has certified compliance with the interim status requirements for incinerators in 40 CFR part 265, subpart O.

(6) Combustion, recovery or recapture device (except for condensers) performance may be determined by using the design evaluation described in paragraph (f) of this section, provided that the combustion, recovery or recapture device receives less than 10 tons per year (9.1 megagrams per year) of uncontrolled organic HAP emissions from one or more PMPUs, determined in accordance with paragraph (d) of this section. If a combustion, recovery or recapture device exempted from testing in accordance with this paragraph receives more than 10 tons per year (9.1 megagrams per year) of uncontrolled organic HAP emissions from one or more PMPUs, the owner or operator shall comply with the performance test requirements in paragraph (c) of this section and shall submit the test report in the next Periodic Report.

(c) *Determination of organic HAP concentration and control efficiency.* Except as provided in paragraphs (a) and (b) of this section, an owner or operator using a combustion, recovery, or recapture device to comply with an epoxide

or organic HAP percent reduction efficiency requirement in § 63.1425(b)(1)(i), (b)(2)(ii), (c)(1)(ii), (c)(3)(ii), or (d)(2); an epoxide concentration limitation in § 63.1425(b)(1)(ii) or (b)(2)(ii); or an annual epoxide emission limitation in § 63.1425(b)(1)(iii) or (b)(2)(iv), shall conduct a performance test using the applicable procedures in paragraphs (c)(1) through (4) of this section. The organic HAP or epoxide concentration and percent reduction may be measured as total epoxide, total organic HAP, or as TOC minus methane and ethane according to the procedures specified. When conducting testing in accordance with this section, the owner or operator is only required to measure HAP of concern for the specific requirement for which compliance is being determined. For instance, to determine compliance with the epoxide emission requirement of § 63.1425(b), the owner or operator is only required to measure epoxide control efficiency or outlet concentration.

(1) *Sampling site location.* The sampling site location shall be determined as specified in paragraphs (c)(1)(i) and (ii) of this section.

(i) For determination of compliance with a percent reduction of total epoxide requirement in § 63.1425(b)(1)(i), (b)(2)(ii), or a percent reduction of total organic HAP requirement in § 63.1425(c)(1)(ii), (c)(3)(ii), or (d)(2), sampling sites shall be located at the inlet of the combustion, recovery, or recapture device as specified in paragraphs (c)(1)(i)(A), (B), and (C) of this section, and at the outlet of the combustion, recovery, or recapture device.

(A) For process vents from continuous unit operations, the inlet sampling site shall be determined in accordance with either paragraph (c)(1)(i)(A)(*1*) or (*2*) of this section.

(*1*) To demonstrate compliance with either the provisions for epoxide emissions in § 63.1425(b) or the provisions for nonepoxide organic HAP emissions from catalyst extraction in § 63.1425(d), the inlet sampling site shall be located after the exit from the continuous unit operation but before any recovery devices, or

(*2*) To demonstrate compliance with the requirements for nonepoxide organic HAP emissions from the use of nonepoxide organic HAP in making or modifying the product in § 63.1425(c), the inlet sampling site shall be located after all control techniques to reduce epoxide emissions and after the final nonepoxide organic HAP recovery device.

(B) For process vents from batch unit operations, the inlet sampling site shall be determined in accordance with either paragraph (c)(1)(i)(B)(*1*) or (*2*) of this section.

(*1*) To demonstrate compliance with either the provisions for epoxide emissions in § 63.1425(b) or the provisions for nonepoxide organic HAP emissions from catalyst extraction in § 63.1425(d), the inlet sampling site shall be located after the exit from the batch unit operation but before any recovery device.

(*2*) To demonstrate compliance with the requirements for nonepoxide organic HAP emissions in making or modifying the product in § 63.1425(c), the inlet sampling site shall be located after all control techniques to reduce epoxide emissions but before any nonepoxide organic HAP recovery device.

(C) If a process vent stream is introduced with the combustion air or as a secondary fuel into a boiler or process heater with a design capacity less than 44 megawatts, selection of the location of the inlet sampling sites shall ensure the measurement of total organic HAP or TOC (minus methane and ethane) concentrations in all process vent streams and primary and secondary fuels introduced into the boiler or process heater.

(ii) To determine compliance with a parts per million by volume total epoxide or TOC limit in § 63.1425(b)(1)(ii) or (b)(2)(iii), the sampling site shall be located at the outlet of the combustion, recovery, or recapture device.

(2) [Reserved]

(3) *Testing conditions and calculation of TOC or total organic HAP concentration.* (i) Testing conditions shall be as specified in paragraphs (c)(3)(i)(A) through (E) of this section, as appropriate.

(A) Testing of process vents from continuous unit operations shall be conducted at maximum representative operating conditions, as described in § 63.1437(a)(1). Each test shall consist of

three 1-hour runs. Gas stream volumetric flow rates shall be measured at approximately equal intervals of about 15 minutes during each 1-hour run. The organic HAP concentration (of the HAP of concern) shall be determined from samples collected in an integrated sample over the duration of each 1-hour test run, or from grab samples collected simultaneously with the flow rate measurements (at approximately equal intervals of about 15 minutes). If an integrated sample is collected for laboratory analysis, the sampling rate shall be adjusted proportionally to reflect variations in flow rate. For gas streams from continuous unit operations, the organic HAP concentration or control efficiency used to determine compliance shall be the average organic HAP concentration or control efficiency of the three test runs.

(B) Testing of process vents from batch unit operations shall be conducted at absolute worst-case conditions or hypothetical worst-case conditions, as defined in paragraphs (c)(3)(i)(B)(*1*) through (*5*) of this section. Worst-case conditions are limited to the maximum production allowed in a State or Federal permit or regulation and the conditions specified in §63.1437(a)(1). Gas stream volumetric flow rates shall be measured at 15-minute intervals, or at least once during the emission episode. The organic HAP or TOC concentration shall be determined from samples collected in an integrated sample over the duration of the test, or from grab samples collected simultaneously with the flow rate measurements (at approximately equal intervals of about 15 minutes). If an integrated sample is collected for laboratory analysis, the sampling rate shall be adjusted proportionally to reflect variations in flow rate.

(*1*) Absolute worst-case conditions are defined by the criteria presented in paragraph (c)(3)(i)(B)(*1*)(*i*) or (*ii*) of this section if the maximum load is the most challenging condition for the control device. Otherwise, absolute worst-case conditions are defined by the conditions in paragraph (c)(3)(i)(B)(*1*)(*iii*) of this section.

(*i*) The period in which the inlet to the control device will contain at least 50 percent of the maximum HAP load (in lbs) capable of being vented to the control device over any 8-hour period. An emission profile as described in paragraph (c)(3)(i)(B)(*3*)(*i*) of this section shall be used to identify the 8-hour period that includes the maximum projected HAP load.

(*ii*) A period of time in which the inlet to the control device will contain the highest HAP mass loading rate capable of being vented to the control device. An emission profile as described in paragraph (c)(3)(i)(B)(*3*)(*i*) of this section shall be used to identify the period of maximum HAP loading.

(*iii*) The period of time when the HAP loading or stream composition (including non-HAP) is most challenging for the control device. These conditions include, but are not limited to the following: periods when the stream contains the highest combined VOC and HAP load described by the emission profiles in paragraph (c)(3)(i)(B)(*3*) of this section; periods when the streams contain HAP constituents that approach limits of solubility for scrubbing media; or periods when the streams contain HAP constituents that approach limits of adsorptivity for carbon adsorption systems.

(*2*) Hypothetical worst-case conditions are simulated test conditions that, at a minimum, contain the highest hourly HAP load of emissions that would be predicted to be vented to the control device from the emissions profile described in paragraph (c)(3)(i)(B)(*3*)(*ii*) or (*iii*) of this section.

(*3*) The owner or operator shall develop an emission profile for the vent to the control device that describes the characteristics of the vent stream at the inlet to the control device under worst case conditions. The emission profile shall be developed based on any one of the procedures described in paragraphs (c)(3)(i)(B)(*3*) (*i*) through (*iii*) of this section, as required by paragraph (c)(3)(i)(B) of this section.

(*i*) The emission profile shall consider all emission episodes that could contribute to the vent stack for a period of time that is sufficient to include all processes venting to the stack and shall consider production scheduling. The profile shall describe the HAP load to the device that equals the highest

sum of emissions from the episodes that can vent to the control device in any given period, not to exceed 1 hour. Emissions per episode shall be divided by the duration of the episode only if the duration of the episode is longer than 1 hour, and emissions per episode shall be calculated using the procedures specified in Equation 1:

$$E = \sum_{i=1}^{n} P_i MW_i \times \frac{(V)(t)}{(R)(T)} \times \frac{P_T}{P_T - \sum_{j=1}^{m} (P_j)} \qquad \text{[Equation 1]}$$

Where:

E = Mass of HAP emitted.

V = Purge flow rate at the temperature and pressure of the vessel vapor space.

R = Ideal gas law constant.

T = Temperature of the vessel vapor space (absolute).

P_i = Partial pressure of the individual HAP.

P_j = Partial pressure of individual condensable VOC compounds (including HAP).

P_T = Pressure of the vessel vapor space.

MW_i = Molecular weight of the individual HAP.

t = Time of purge.

n = Number of HAP compounds in the emission stream.

i = Identifier for a HAP compound.

j = Identifier for a condensable compound.

m = Number of condensable compounds (including HAP) in the emission stream.

(*ii*) The emission profile shall consist of emissions that meet or exceed the highest emissions that would be expected under actual processing conditions. The profile shall describe equipment configurations used to generate the emission events, volatility of materials processed in the equipment, and the rationale used to identify and characterize the emission events. The emissions may be based on using compounds more volatile than compounds actually used in the process(es), and the emissions may be generated from all equipment in the process(es) or only selected equipment.

(*iii*) The emission profile shall consider the capture and control system limitations and the highest emissions that can be routed to the control device, based on maximum flow rate and concentrations possible because of limitations on conveyance and control equipment (e.g., fans, LEL alarms and safety bypasses).

(*4*) Three runs, each at a minimum of the complete duration of the batch venting episode or 1 hour, whichever is shorter, and a maximum of 8 hours, are required for performance testing. Each run shall occur over the same worst-case conditions, as defined in paragraph (c)(3)(i)(B) of this section.

(*5*) If a condenser is used to control the process vent stream(s), the worst case emission episode(s) shall represent a period of time in which a process vent from the batch cycle or combination of cycles (if more than one cycle is vented through the same process vent) will require the maximum heat removal capacity, in Btu/hr, to cool the process vent stream to a temperature that, upon calculation of HAP concentration, will yield the required removal efficiency for the entire cycle. The calculation of maximum heat load shall be based on the emission profile described in paragraph (c)(3)(i)(B)(*3*) of this section that will allow calculation of sensible and latent heat loads.

(ii) The concentration of either TOC (minus methane or ethane) or total organic HAP (of the HAP of concern) shall be calculated according to paragraph (c)(3)(ii)(A) or (B) of this section.

(A) The TOC concentration (C_{TOC}) is the sum of the concentrations of the individual components and shall be computed for each run using Equation 2:

$$C_{TOC} = \sum_{i=1}^{x} \frac{\left(\sum_{j=1}^{n} C_{ji}\right)}{x} \qquad \text{[Equation 2]}$$

Where:

C_{TOC} = Concentration of TOC (minus methane and ethane), dry basis, parts per million by volume.
C_{ji} = Concentration of sample components j of sample i, dry basis, parts per million by volume.
n = Number of components in the sample.
x = Number of samples in the sample run.

(B) The total organic HAP concentration (C_{HAP}) shall be computed according to Equation 2, except that only the organic HAP species shall be summed.

(iii) The concentration of TOC or total organic HAP shall be corrected to 3 percent oxygen if a combustion device is used.

(A) The emission rate correction factor or excess air, integrated sampling and analysis procedures of Method 3B of 40 CFR part 60, appendix A shall be used to determine the oxygen concentration ($\%0_{2d}$). The samples shall be taken during the same time that the TOC (minus methane or ethane) or total organic HAP samples are taken.

(B) The concentration corrected to 3 percent oxygen shall be computed using Equation 3, as follows:

$$C_c = C_m\left(\frac{17.9}{20.9 - \%O_{2d}}\right) \qquad \text{[Equation 3]}$$

Where:

C_c = Concentration of TOC or organic HAP corrected to 3 percent oxygen, dry basis, parts per million by volume.
C_m = Concentration of TOC (minus methane and ethane) or organic HAP, dry basis, parts per million by volume.
$\%0_{2d}$ = Concentration of oxygen, dry basis, percent by volume.

(4) *Test methods*. When testing is conducted to measure emissions from an affected source, the test methods specified in paragraphs (c)(4)(i) through (iv) of this section shall be used, as applicable.

(i) For sample and velocity traverses, Method 1 or 1A of appendix A of part 60 shall be used, as appropriate, except that references to particulate matter in Method 1A do not apply for the purposes of this subpart.

(ii) The velocity and gas volumetric flow rate shall be determined using Method 2, 2A, 2C, or 2D of 40 CFR part 60, appendix A, as appropriate.

(iii) The concentration measurements shall be determined using the methods described in paragraphs (c)(4)(iii) (A) through (C) of this section.

(A) Method 18 of appendix A of part 60 may be used to determine the HAP concentration in any control device efficiency determination.

(B) Method 25 of appendix A of part 60 may be used to determine total gaseous nonmethane organic concentration for control efficiency determinations in combustion devices.

(C) Method 25A of appendix A of part 60 may be used to determine the HAP or TOC concentration for control device efficiency determinations under the conditions specified in Method 25 of appendix A of part 60 for direct measurements of an effluent with a flame ionization detector, or in demonstrating compliance with the 20 ppmv standard, the instrument shall be calibrated on methane or the predominant HAP. If calibrating on the predominant HAP, the use of Method 25A of appendix A of part 60 shall comply with paragraphs (c)(4)(iii)(C) (*1*) through (*3*) of this section.

(*1*) The organic HAP used as the calibration gas for Method 25A of appendix A of part 60 shall be the single organic HAP representing the largest percent by volume.

(*2*) The use of Method 25A, 40 CFR part 60, appendix A, is acceptable if the response from the high level calibration gas is at least 20 times the standard deviation of the response from the zero calibration gas when the instrument is zeroed on the most sensitive scale.

(*3*) The span value of the analyzer shall be less than 100 ppmv.

(iv) Alternatively, any other method or data that have been validated according to the applicable procedures in 40 CFR part 63, appendix A, Method 301 may be used.

(5) *Calculation of percent reduction efficiency*. The following procedures shall be used to calculate percent reduction efficiency:

(i) Test duration shall be as specified in paragraphs (c)(3)(i) (A) through (B) of this section, as appropriate.

(ii) The mass rate of either TOC (minus methane and ethane) or total organic HAP of the HAP of concern (E_i, E_o) shall be computed.

(A) The following equations shall be used:

$$E_i = K_2\left(\sum_{j=1}^{n} C_{ij}M_{ij}\right)Q_i \qquad \text{[Equation 4]}$$

$$E_o = K_2\left(\sum_{j=1}^{n} C_{oj}M_{oj}\right)Q_o$$

Where:

C_{ij}, C_{oj} = Concentration of sample component j of the gas stream at the inlet and outlet of the combustion, recovery, or recapture device, respectively, dry basis, parts per million by volume.

E_i, E_o = Mass rate of TOC (minus methane and ethane) or total organic HAP at the inlet and outlet of the combustion, recovery, or recapture device, respectively, dry basis, kilogram per hour.

M_{ij}, M_{oj} = Molecular weight of sample component j of the gas stream at the inlet and outlet of the combustion, recovery, or recapture device, respectively, gram/gram-mole.

Q_i, Q_o = Flow rate of gas stream at the inlet and outlet of the combustion, recovery, or recapture device, respectively, dry standard cubic meter per minute.

K_2 = Constant, 2.494×10^{-6} (parts per million)$^{-1}$ (gram-mole per standard cubic meter) (kilogram/gram) (minute/hour), where standard temperature (gram-mole per standard cubic meter) is 20 °C.

(B) Where the mass rate of TOC is being calculated, all organic compounds (minus methane and ethane) measured by Method 18 of 40 CFR part 60, appendix A are summed using Equations 4 and 5 in paragraph (c)(5)(ii)(A) of this section.

(C) Where the mass rate of total organic HAP is being calculated, only the organic HAP species shall be summed using Equations 4 and 5 in paragraph (c)(5)(ii)(A) of this section.

(iii) The percent reduction in TOC (minus methane and ethane) or total organic HAP shall be calculated using Equation 6 as follows:

$$R = \frac{E_i - E_o}{E_i}(100) \qquad \text{[Equation 6]}$$

Where:

R = Control efficiency of combustion, recovery, or recapture device, percent.

E_i = Mass rate of TOC (minus methane and ethane) or total organic HAP at the inlet to the combustion, recovery, or recapture device as calculated under paragraph (c)(5)(ii) of this section, kilograms TOC per hour or kilograms organic HAP per hour.

E_o = Mass rate of TOC (minus methane and ethane) or total organic HAP at the outlet of the combustion, recovery, or recapture device, as calculated under paragraph (c)(5)(ii) of this section, kilograms TOC per hour or kilograms organic HAP per hour.

(iv) If the process vent stream entering a boiler or process heater with a design capacity less than 44 megawatts is introduced with the combustion air or as a secondary fuel, the weight-percent reduction of total organic HAP or TOC (minus methane and ethane) across the device shall be determined by comparing the TOC (minus methane and ethane) or total organic HAP in all combusted process vent streams and primary and secondary fuels with the TOC (minus methane and ethane) or total organic HAP, respectively, exiting the combustion device.

(d) *Determination of uncontrolled organic HAP emissions.* For each process vent at a PMPU that is complying with the process vent control requirements in § 63.1425(b)(1)(i), (b)(1)(iii), (b)(2)(ii), (b)(2)(iv), (c)(1)(ii), or (d)(2) using a combustion, recovery, or recapture device, the owner or operator shall determine the uncontrolled organic HAP emissions in accordance with the provisions of this paragraph, with the exceptions noted in paragraph (d)(1) of this section. The provisions of § 63.1427(c)(1) shall be used to calculate uncontrolled epoxide emissions prior to the onset of an extended cook out.

(1) *Exemptions.* The owner or operator is not required to determine uncontrolled organic HAP emissions for process vents in a PMPU if the conditions in paragraph (d)(1)(i), (ii), or (iii) of this section are met.

(i) For PMPUs where all process vents subject to the epoxide emission reduction requirements of § 63.1425(b) are controlled at all times using a combustion, recovery, or recapture device, or extended cookout, the owner or operator is not required to determine uncontrolled epoxide emissions.

(ii) For PMPUs where the combination of process vents from batch unit operations associated with the use of nonepoxide organic HAP to make or modify the product is subject to the

Group 1 requirements of § 63.1425(c)(1), the owner or operator is not required to determine uncontrolled nonepoxide organic HAP emissions for those process vents if every process vent from a batch unit operation associated with the use of nonepoxide organic HAP to make or modify the product in the PMPU is controlled at all times using a combustion, recovery, or recapture device.

(iii) For PMPUs where all process vents associated with catalyst extraction that are subject to the organic emission reduction requirements of § 63.1425(d)(2) are controlled at all times using a combustion, recovery, or recapture device, the owner or operator is not required to determine uncontrolled organic HAP emissions for those process vents.

(2) *Process vents from batch unit operations.* The uncontrolled organic HAP emissions from an individual batch cycle for each process vent from a batch unit operation shall be determined using the procedures in the NESHAP for Group I Polymers and Resins (40 CFR part 63, subpart U), § 63.488(b)(1) through (9). Uncontrolled emissions from process vents from batch unit operations shall be determined after the exit from the batch unit operation but before any recovery device.

(3) *Process vents from continuous unit operations.* The uncontrolled organic HAP emissions for each process vent from a continuous unit operation in a PMPU shall be determined at the location specified in paragraph (d)(3)(i) of this section, using the procedures in paragraph (d)(3)(ii) of this section.

(i) For process vents subject to either the provisions for epoxide emissions in § 63.1425(b) or the provisions for organic HAP emissions from catalyst extraction in § 63.1425(d), uncontrolled emissions shall be determined after the exit from the continuous unit operation but before any recovery device.

(ii) The owner or operator shall determine the hourly uncontrolled organic HAP emissions from each process vent from a continuous unit operation in accordance with paragraph (c)(5)(ii) of this section, except that the emission rate shall be determined at the location specified in paragraph (d)(3)(i) of this section.

(e) *Determination of organic HAP emission reduction for a PMPU.* (1) The owner or operator shall determine the organic HAP emission reduction for process vents in a PMPU that are complying with § 63.1425(b)(1)(i), (b)(2)(ii), (c)(1)(ii), or (d)(2) using Equation 7. The organic HAP emission reduction shall be determined for each group of process vents subject to the same paragraph (i.e., paragraph (b), (c), or (d)) of § 63.1425. For instance, process vents that emit epoxides are subject to paragraph (b) of § 63.1425. Therefore, if the owner or operator of an existing affected source is complying with the 98 percent reduction requirement in § 63.1425(b)(2)(ii), the organic HAP (i.e., epoxide) emission reduction shall be determined for the group of vents in a PMPU that are subject to this paragraph.

$$RED_{PMPU} = \left(\frac{\sum_{i=1}^{n} \left(E_{unc,\,i} \right) \left(\frac{R_i}{100} \right)}{\sum_{i=1}^{n} \left(E_{unc,\,i} \right) + \sum_{j=1}^{m} \left(E_{unc,\,j} \right)} \right) * 100 \qquad \text{[Equation 7]}$$

Where:

RED_{PMPU} = Organic HAP emission reduction for the group of process vents subject to the same paragraph of § 63.1425, percent.

$E_{unc,i}$ = Uncontrolled organic HAP emissions from process vent i that is controlled using a combustion, recovery, or recapture device, or extended cookout, kg/batch cycle for process vents from batch unit operations, kg/hr for process vents from continuous unit operations.

n = Number of process vents in the PMPU that are subject to the same paragraph of § 63.1425 and that are controlled using a

combustion, recovery, or recapture device, or extended cookout.

R_i = Control efficiency of the combustion, recovery, or recapture device, or extended cookout, used to control organic HAP emissions from vent i, determined in accordance with paragraph (e)(2) of this section.

$E_{unc,j}$ = Uncontrolled organic HAP emissions from process vent j that is not controlled using a combustion, recovery, or recapture device, kg/batch cycle for process vents from batch unit operations, kg/hr for process vents from continuous unit operations.

m = Number of process vents in the PMPU that are subject to the same paragraph of § 63.1425 and that are not controlled using a combustion, recovery, or recapture device.

(2) The control efficiency, R_i, shall be assigned as specified below in paragraph (e)(2)(i), (ii), (iii), or (iv) of this section.

(i) If the process vent is controlled using a flare (and the owner or operator has not previously obtained approval to assume a control efficiency greater than 98 percent in accordance with § 63.6(g)) or a combustion device specified in paragraph (b)(1), (2), (4), or (5) of this section, and a performance test has not been conducted, the control efficiency shall be assumed to be 98 percent.

(ii) If the process vent is controlled using a combustion, recovery, or recapture device for which a performance test has been conducted in accordance with the provisions of paragraph (c) of this section, or for which a performance test that meets the requirements of paragraph (b)(3) of this section has been previously performed, the control efficiency shall be the efficiency determined by the performance test.

(iii) If epoxide emissions from the process vent are controlled using extended cookout, the control efficiency shall be the efficiency determined in accordance with § 63.1427(e).

(iv) If the process vent is controlled using a flare, and the owner or operator has obtained approval to assume a control efficiency greater than 98 percent in accordance with § 63.6(g), the control efficiency shall be the efficiency approved in accordance with § 63.6(g).

(f) *Design evaluation.* A design evaluation is required for those control techniques that receive less than 10 tons per year (9.1 megagrams per year) of uncontrolled organic HAP emissions from one or more PMPU, if the owner or operator has chosen not to conduct a performance test for those control techniques in accordance with paragraph (b)(6) of this section. The design evaluation shall include documentation demonstrating that the control technique being used achieves the required control efficiency under worst-case conditions, as determined from the emission profile described in § 63.1426(c)(3)(i)(B)(*3*)(*i*).

(1) Except for ECO whose design evaluation is presented in paragraph (f)(2) of this section, to demonstrate that a control technique meets the required control efficiency, a design evaluation shall address the composition and organic HAP concentration of the vent stream, immediately preceding the use of the control technique. A design evaluation shall also address other vent stream characteristics and control technique operating parameters, as specified in any one of paragraphs (f)(1)(i) through (vi) of this section, depending on the type of control technique that is used. If the vent stream is not the only inlet to the control technique, the owner or operator shall also account for all other vapors, gases, and liquids, other than fuels, received into the control technique from one or more PMPUs, for purposes of the efficiency determination.

(i) For an enclosed combustion technique used to comply with the provisions of § 63.1425(b)(1), (c)(1), or (d), with a minimum residence time of 0.5 seconds and a minimum temperature of 760 °C, the design evaluation shall document that these conditions exist.

(ii) For a combustion control technique that does not satisfy the criteria in paragraph (f)(1)(i) of this section, the design evaluation shall document the control efficiency and address the characteristics listed in paragraphs (f)(1)(ii)(A) through (C) of this section, depending on the type of control technique.

(A) For a thermal vapor incinerator, in the design evaluation the owner or operator shall consider the autoignition temperature of the organic HAP, shall consider the vent stream flow rate, and shall establish

the design minimum and average temperatures in the combustion zone and the combustion zone residence time.

(B) For a catalytic vapor incinerator, in the design evaluation the owner or operator shall consider the vent stream flow rate and shall establish the design minimum and average temperatures across the catalyst bed inlet and outlet.

(C) For a boiler or process heater, in the design evaluation the owner or operator shall consider the vent stream flow rate; shall establish the design minimum and average flame zone temperatures and combustion zone residence time; and shall describe the method and location where the vent stream is introduced into the flame zone.

(iii) For a condenser, in the design evaluation the owner or operator shall consider the vent stream flow rate, relative humidity, and temperature, and shall establish the design outlet organic HAP compound concentration level, design average temperature of the exhaust vent stream, and the design average temperatures of the coolant fluid at the condenser inlet and outlet. The temperature of the gas stream exiting the condenser shall be measured and used to establish the outlet organic HAP concentration.

(iv) For a carbon adsorption system that regenerates the carbon bed directly onsite as part of the control technique (such as a fixed-bed adsorber), in the design evaluation the owner or operator shall consider the vent stream flow rate, relative humidity, and temperature, and shall establish the design exhaust vent stream organic compound concentration level, adsorption cycle time, number and capacity of carbon beds, type and working capacity of activated carbon used for the carbon beds, design total regeneration stream mass or volumetric flow over the period of each complete carbon bed regeneration cycle, design carbon bed temperature after regeneration, design carbon bed regeneration time, and design service life of the carbon. For vacuum desorption, the pressure drop shall also be included.

(v) For a carbon adsorption system that does not regenerate the carbon bed directly onsite as part of the control technique (such as a carbon canister), in the design evaluation the owner or operator shall consider the vent stream mass or volumetric flow rate, relative humidity, and temperature, and shall establish the design exhaust vent stream organic compound concentration level, capacity of the carbon bed, type and working capacity of activated carbon used for the carbon bed, and design carbon replacement interval based on the total carbon working capacity of the control technique and source operating schedule.

(vi) For a scrubber, in the design evaluation the owner or operator shall consider the vent stream composition, constituent concentrations, liquid-to-vapor ratio, scrubbing liquid flow rate and concentration, temperature, and the reaction kinetics of the constituents with the scrubbing liquid. The design evaluation shall establish the design exhaust vent stream organic compound concentration level and shall include the additional information in paragraphs (f)(1)(vi) (A) and (B) of this section for trays and a packed column scrubber.

(A) Type and total number of theoretical and actual trays.

(B) Type and total surface area of packing for entire column and for individual packed sections, if the column contains more than one packed section.

(2) For ECO, the design evaluation shall establish the minimum duration (time) of the ECO, the maximum pressure at the end of the ECO, or the maximum epoxide concentration in the reactor liquid at the end of the ECO for each product class.

[64 FR 29439, June 1, 1999, as amended at 65 FR 26499, May 8, 2000]

§63.1427 Process vent requirements for processes using extended cookout as an epoxide emission reduction technique.

(a) *Applicability of extended cookout requirements.* Owners or operators of affected sources that produce polyether polyols using epoxides, and that are using ECO as a control technique to reduce epoxide emissions in order to comply with percent emission reduction requirements in §63.1425(b)(1)(i) or

(b)(2)(ii) shall comply with the provisions of this section. The owner or operator that is using ECO in order to comply with the emission factor requirements in § 63.1425(b)(1)(iii) or § 63.1425(b)(2)(iv) shall demonstrate that the specified emission factor is achieved by following the requirements in § 63.1431. If additional control devices are used to further reduce the HAP emissions from a process vent already controlled by ECO, then the owner or operator shall also comply with the testing, monitoring, recordkeeping, and reporting requirements associated with the additional control device, as specified in §§ 63.1426, 63.1429, and 63.1430, respectively.

(1) For each product class, the owner or operator shall determine the batch cycle percent epoxide emission reduction for the most difficult to control product in the product class, where the most difficult to control product is the polyether polyol that is manufactured with the slowest pressure decay curve.

(2) The owner or operator may determine the batch cycle percent epoxide emission reduction by directly measuring the concentration of the unreacted epoxide, or by using process knowledge, reaction kinetics, and engineering knowledge, in accordance with paragraph (a)(2)(i) of this section.

(i) If the owner or operator elects to use any method other than direct measurement, the epoxide concentration shall be determined by direct measurement for one product from each product class and compared with the epoxide concentration determined using the selected estimation method, with the exception noted in paragraph (a)(2)(ii) of this section. If the difference between the directly determined epoxide concentration and the calculated epoxide concentration is less than 25 percent, then the selected estimation method will be considered to be an acceptable alternative to direct measurement for that class.

(ii) If uncontrolled epoxide emissions prior to the end of the ECO are less than 10 tons per year (9.1 megagrams per year), the owner or operator is not required to perform the direct measurement required in paragraph (a)(2)(i) of this section. Uncontrolled epoxide emissions prior to the end of the ECO shall be determined by the procedures in paragraph (d)(1) of this section.

(b) *Define the end of epoxide feed.* The owner or operator shall define the end of the epoxide feed in accordance with paragraph (b)(1) or (2) of this section.

(1) The owner or operator shall determine the concentration of epoxide in the reactor liquid at the point in time when all epoxide has been added to the reactor and prior to any venting. This concentration shall be determined in accordance with the procedures in paragraph (f)(1)(i) of this section.

(2) If the conditions in paragraphs (b)(2)(i), (ii), and (iii) of this section are met, the end of the epoxide feed may be defined by the reactor epoxide partial pressure at the point in time when all epoxide reactants have been added to the reactor. This reactor epoxide partial pressure shall be determined in accordance with the procedures in paragraph (g) of this section.

(i) No epoxide is emitted before the end of the ECO;

(ii) Extended cookout is the only control technique to reduce epoxide emissions; and

(iii) The owner or operator elects to determine the percent epoxide emission reduction for the ECO using reactor epoxide partial pressure in accordance with paragraph (e)(2) of this section.

(c) *Define the onset of the ECO.* The owner or operator shall calculate the uncontrolled emissions for the batch cycle by calculating the epoxide emissions, if any, prior to the onset of the ECO, plus the epoxide emissions at the onset of the ECO. The onset of the ECO is defined as the point in time when the combined unreacted epoxide concentration in the reactor liquid is equal to 25 percent of the concentration of epoxides at the end of the epoxide feed, which was determined in accordance with paragraph (b) of this section.

(1) The uncontrolled epoxide emissions for the batch cycle shall be determined using Equation 8.

$$E_{e,u} = \left(C_{liq,i}\right)\left(V_{liq,i}\right)\left(D_{liq,i}\right) + \left(C_{vap,i}\right)\left(V_{vap,i}\right)\left(D_{vap,i}\right) + \left(E_{epox,bef}\right) \qquad \text{[Equation 8]}$$

Where:

$E_{e,u}$ = Uncontrolled epoxide emissions at the onset of the ECO, kilograms per (kg/)batch.

$C_{liq,i}$ = Concentration of epoxide in the reactor liquid at the onset of the ECO, which is equal to 25 percent of the concentration of epoxide at the end of the epoxide feed, determined in accordance with paragraph (b)(1) of this section, weight percent.

$V_{liq,i}$ = Volume of reactor liquid at the onset of the ECO, liters.

$D_{liq,i}$ = Density of reactor liquid, kg/liter.

$C_{vap,i}$ = Concentration of epoxide in the reactor vapor space at the onset of the ECO, determined in accordance with paragraph (f)(2) of this section, weight percent.

$V_{vap,i}$ = Volume of the reactor vapor space at the onset of the ECO, liters.

$D_{vap,i}$ = Vapor density of reactor vapor space at the onset of the ECO, kg/liter.

$E_{epox,bef}$ = Epoxide emissions that occur prior to the onset of the ECO, determined in accordance with the provisions of §63.1426(d), kilograms.

(2) If the conditions in paragraphs (b)(2)(i), (ii), and (iii) of this section are met, the owner or operator may define the onset of the ECO as the point in time when the reactor epoxide partial pressure equals 25 percent of the reactor epoxide partial pressure at the end of the epoxide feed, and is not required to determine the uncontrolled epoxide emissions in accordance with paragraph (c)(1) of this section.

(d) *Determine emissions at the end of the ECO*. The owner or operator shall calculate the epoxide emissions at the end of the ECO, where the end of the ECO is defined as the point immediately before the time when the reactor contents are emptied and/or the reactor vapor space purged to the atmosphere or to a combustion, recovery, or recapture device.

(1) The epoxide emissions at the end of the ECO shall be determined using Equation 9.

$$E_{e,E} = \left(C_{liq,f}\right)\left(V_{liq,f}\right)\left(D_{liq,f}\right) + \left(C_{vap,f}\right)\left(V_{vap,f}\right)\left(D_{vap,f}\right) \qquad \text{[Equation 9]}$$

Where:

$E_{e,E}$ = Epoxide emissions at the end of the ECO, kg.

$C_{liq,f}$ = Concentration of epoxide in the reactor liquid at the end of the ECO, determined in accordance with paragraph (f)(1) of this section, weight percent.

$V_{liq,f}$ = Volume of reactor liquid at the end of the ECO, liters.

$D_{liq,f}$ = Density of reactor liquid, kg/liter.

$C_{vap,f}$ = Concentration of epoxide in the reactor vapor space as it exits the reactor at the end of the ECO, determined in accordance with paragraph (f)(2) of this section, weight percent.

$V_{vap,f}$ = Volume of the reactor vapor space as it exits the reactor at the end of the ECO, liters.

$D_{vap,f}$ = Vapor density of reactor vapor space at the end of the ECO, kg/liter.

(2) If the conditions in paragraphs (b)(2)(i), (ii), and (iii) of this section are met, the owner or operator may determine the reactor epoxide partial pressure at the end of the ECO instead of determining the uncontrolled epoxide emissions at the end of the ECO in accordance with paragraph (d)(1) of this section.

(e) *Determine percent epoxide emission reduction*. (1) The owner or operator shall determine the percent epoxide emission reduction for the batch cycle using Equation 10.

$$R_{batchcycle} = \left[\frac{E_{e,u} - \left(E_{e,E}\right)\left(1 - \frac{R_{addon,i}}{100}\right) - \left(E_{e,o}\right)\left(1 - \frac{R_{addon,j}}{100}\right)}{E_{e,u}} \right] * 100 \qquad \text{[Equation 10]}$$

Where:

$R_{batchcycle}$ = Epoxide emission reduction for the batch cycle, percent.

$E_{e,E}$ = Epoxide emissions at the end of the ECO determined in accordance with paragraph (d)(1) of this section, kilograms.

$R_{addon,i}$ = Control efficiency of combustion, recovery, or recapture device that is used to control epoxide emissions after the ECO, determined in accordance with the provisions of § 63.1426(c), percent.

$E_{e,o}$ = Epoxide emissions that occur before the end of the ECO, determined in accordance with the provisions of § 63.1426(d), kilograms.

$R_{addon,j}$ = Control efficiency of combustion, recovery, or recapture device that is used to control epoxide emissions that occur before the end of the ECO, determined in accordance with the provisions of § 63.1426(c), percent.

$E_{e,u}$ = Uncontrolled epoxide emissions determined in accordance with paragraph (c)(1) of this section, kilograms.

(2) If the conditions in paragraphs (b)(2)(i), (ii), and (iii) of this section are met, the owner or operator may determine the percent epoxide emission reduction for the batch cycle using reactor epoxide partial pressure and Equation 11, instead of using the procedures in paragraph (e)(1) of this section.

$$\text{FEXT loss}\,(K_x) = K_o - 20 \log 10 \frac{F_x}{F_o} - 10 \log 10 \frac{L_x}{L_o}$$

Where:

$R_{batchcycle}$ = Epoxide emission reduction for the batch cycle, percent.

$P_{epox,i}$ = Reactor epoxide partial pressure at the onset of the ECO, determined in accordance with paragraph (c)(2) of this section, mm Hg.

$P_{epox,f}$ = Reactor epoxide partial pressure at the end of the ECO, determined in accordance with paragraph (c)(2) of this section, mm Hg.

(f) *Determination of epoxide concentrations*. The owner or operator shall determine the epoxide concentrations in accordance with the procedures in this paragraph.

(1) The owner or operator shall determine the concentration of epoxide in the reactor liquid using either direct measurement in accordance with paragraph (f)(1)(i) of this section, or reaction kinetics in accordance with paragraph (f)(1)(ii) of this section. An owner or operator may also request to use an alternative methodology in accordance with paragraph (f)(1)(iii) of this section.

(i) The owner or operator shall submit a standard operating procedure for obtaining the liquid sample, along with the test method used to determine the epoxide concentration. This information shall be submitted in the Precompliance Report.

(ii) Determine the epoxide concentration in the reactor liquid using Equation 12. [Equation 12]

$$C_{liq,f} = C_{liq,i}\, e^{-kt} \qquad \text{[Equation 12]}$$

$C_{liq,f}$ = Concentration of epoxide in the reactor liquid at the end of the time period, weight percent.

$C_{liq,i}$ = Concentration of epoxide in the reactor liquid at the beginning of the time period, weight percent.

k = Reaction rate constant, 1/hr.

t = Time, hours.

NOTE: This equation assumes a first order reaction with respect to epoxide concentration. where:

(iii) If the owner/operator deems that the methods listed in paragraphs (f)(1)(i) and (ii) of this section are not appropriate for the reaction system for a PMPU, then the owner/operator may submit a request for the use of an alternative method.

(2) The owner or operator shall determine the concentration of epoxide in the reactor vapor space using either direct measurement in accordance with paragraph (f)(2)(i) of this section, or by engineering estimation in accordance with paragraph (f)(2)(ii) of this section. An owner or operator may also request to use an alternative methodology in accordance with paragraph (f)(2)(iii) of this section.

(i) The owner or operator shall take two representative samples from a bleed valve off the reactor's process vent. The owner or operator shall determine the total epoxide concentration using 40 CFR part 60, appendix A, Method 18.

(ii) Determine the epoxide concentration in the vapor space using Raoult's Law or another appropriate phase equilibrium equation and the liquid epoxide concentration, determined in accordance with paragraph (f)(1) of this section.

(iii) If the owner/operator deems that the methods listed in paragraphs (f)(1)(i) and (ii) of this section are not appropriate for the reaction system for a PMPU, then the owner/operator may submit a request for the use of an alternative method.

(g) *Determination of pressure.* The owner or operator shall determine the total pressure of the system using standard pressure measurement devices calibrated according to the manufacturer's specifications or other written procedures that provide adequate assurance that the equipment would reasonably be expected to monitor accurately.

(h) *Determination if pressure decay curves are similar.* The owner or operator shall determine the pressure decay curve as defined in §63.1423. Products with similar pressure decay curves constitute a product class. To determine if two pressure decay curves are similar when the pressure decay curves for products have different starting and finishing pressures, the owner or operator shall determine the time when the pressure has fallen to half its total pressure by using Equation 13:

$$\text{Time}\left(P_{half}1\right) - \text{Time}\left(P_{half}2\right) < 20\%\ T_{AVG} \qquad \text{[Equation 13]}$$

Where:

$P_{half}1$ = Half the total pressure of the epoxide for product 1.

Time ($P_{half}1$) = Time when the pressure has fallen to half its total pressure for product 1.

$P_{half}2$ = Half the total pressure of the epoxide for product 2.

Time ($P_{half}2$) = Time when the pressure has fallen to half its total pressure for product 2.

T_{AVG} = The average time to cookout to the point where the epoxide pressure is 25 percent of the epoxide pressure at the end of the feed step for products 1 and 2.

(i) *ECO monitoring requirements.* The owner or operator using ECO shall comply with the monitoring requirements of this paragraph to demonstrate continuous compliance with this subpart. Paragraphs (i)(1) through (3) of this section address monitoring of the extended cookout.

(1) To comply with the provisions of this section, the owner or operator shall monitor one of the parameters listed in paragraphs (i)(1)(i) through (iii) of this section, or may utilize the provision in paragraph (i)(1)(iv) of this section.

(i) Time from the end of the epoxide feed;

(ii) The epoxide partial pressure in the closed reactor;

(iii) Direct measurement of epoxide concentration in the reactor liquid at the end of the ECO, when the reactor liquid is still in the reactor, or after the reactor liquid has been transferred to another vessel; or

(iv) An owner or operator may submit a request to the Administrator to monitor a parameter other than the parameters listed in paragraphs (i)(1)(i) through (iii) of this section, as described in § 63.1439(f).

(2) During the determination of the percent epoxide emission reduction in paragraphs (b) through (e) of this section, the owner or operator shall establish, as a level that shall be maintained during periods of operation, one of the parameters in paragraphs (i)(2)(i) through (iii) of this section, or may utilize the procedure in paragraph (i)(2)(iv) of this section, for each product class.

(i) The time from the end of the epoxide feed to the end of the ECO;

(ii) The reactor epoxide partial pressure at the end of the ECO;

(iii) The epoxide concentration in the reactor liquid at the end of the ECO, when the reactor liquid is still in the reactor, or after the reactor liquid has been transferred to another vessel; or

(iv) An owner or operator may submit a request to the Administrator to monitor a parameter other than the parameters listed in paragraphs (i)(2)(i) through (iii) of this section, as described in § 63.1439(f).

(3) For each batch cycle where ECO is used to reduce epoxide emissions, the owner or operator shall record the value of the monitored parameter at the end of the ECO. This parameter is then compared with the level established in accordance with paragraph (i)(2) of this section to determine if an excursion has occurred. An ECO excursion is defined as one of the situations described in paragraphs (i)(3)(i) through (v) of this section.

(i) When the time from the end of the epoxide feed to the end of the ECO is less than the time established in paragraph (i)(2)(i) of this section;

(ii) When the reactor epoxide partial pressure at the end of the ECO is greater than the partial pressure established in paragraph (i)(2)(ii) of this section;

(iii) When the epoxide concentration in the reactor liquid at the end of the ECO is greater than the epoxide concentration established in paragraph (i)(2)(iii) of this section;

(iv) When the parameter is not measured and recorded at the end of the ECO; or

(v) When the alternative monitoring parameter is outside the range established under § 63.1439(f) for proper operation of the ECO as a control technique.

(j) *Recordkeeping requirements.* (1) The owner or operator shall maintain the records specified in paragraphs (j)(1)(i) and (ii) of this section, for each product class. The owner or operator shall also maintain the records related to the initial determination of the percent epoxide emission reduction specified in paragraphs (j)(1)(iii) through (x) of this section, as applicable, for each product class.

(i) Operating conditions of the product class, including:

(A) Pressure decay curve;

(B) Minimum reaction temperature;

(C) Number of reactive hydrogens in the raw material;

(D) Minimum catalyst concentration;

(E) Ratio of EO/PO at the end of the epoxide feed; and

(F) Reaction conditions, including the size of the reactor or batch.

(ii) A listing of all products in the product class, along with the information specified in paragraphs (j)(1)(i)(A) through (F) of this section, for each product.

(iii) The concentration of epoxide at the end of the epoxide feed, determined in accordance with paragraph (b)(1) of this section.

(iv) The concentration of epoxide at the onset of the ECO, determined in accordance with paragraph (c) of this section.

(v) The uncontrolled epoxide emissions at the onset of the ECO, determined in accordance with paragraph (c)(1) of this section. The records shall also include all the background data, measurements, and assumptions used to calculate the uncontrolled epoxide emissions.

(vi) The epoxide emissions at the end of the ECO, determined in accordance with paragraph (d)(1) of this section. The records shall also include all the background data, measurements, and assumptions used to calculate the epoxide emissions.

(vii) The percent epoxide reduction for the batch cycle, determined in accordance with paragraph (e)(1) of this section. The records shall also include all the background data, measurements, and assumptions used to calculate the percent reduction.

(viii) The parameter level, established in accordance with paragraph (i)(3) of this section.

(ix) If epoxide emissions occur before the end of the ECO, the owner or operator shall maintain records of the time and duration of all such emission episodes that occur during the initial demonstration of batch cycle efficiency.

(x) If the conditions in paragraphs (b)(2)(i), (ii), and (iii) of this section are met, the owner or operator is not required to maintain the records specified in paragraphs (j)(1)(iii) through (iv) of this section, but shall maintain the records specified in paragraphs (j)(1)(x)(A), (B), and (C) of this section.

(A) The reactor epoxide partial pressure at the following times:

(*1*) At end of the epoxide feed, determined in accordance with paragraph (b)(2) of this section;

(*2*) At the onset of the ECO, established in accordance with paragraph (c)(2) of this section; or

(*3*) At the end of the ECO, determined in accordance with paragraph (d)(2) of this section.

(B) The percent epoxide reduction for the batch cycle, determined in accordance with paragraph (e)(2) of this section. The records shall also include all the measurements and assumptions used to calculate the percent reduction.

(C) The reactor epoxide partial pressure at the end of the ECO.

(2) The owner or operator shall maintain the records specified in paragraphs (j)(2)(i) through (iv) of this section.

(i) For each batch cycle, the product being produced and the product class to which it belongs.

(ii) For each batch cycle, the owner or operator shall record the value of the parameter monitored in accordance with paragraph (i)(3) of this section.

(iii) If a combustion, recovery, or recapture device is used to reduce emission in conjunction with ECO, the owner or operator shall record the information specified in §63.1430(d) and comply with the monitoring provisions in §63.1429.

(iv) [Reserved]

(v) If epoxide emissions occur before the end of the ECO, the owner or operator shall maintain records of the time and duration of all such emission episodes.

(k) *Reporting requirements*. The owner or operator shall comply with the reporting requirements in this paragraph.

(1) The information specified in paragraphs (k)(1)(i) through (ii) of this section shall be provided in the Precompliance Report, as specified in §63.1439(e)(4).

(i) A standard operating procedure for obtaining the reactor liquid sample and a method that will be used to determine the epoxide concentration in the liquid, in accordance with paragraph (f)(1)(i) of this section.

(ii) A request to monitor a parameter other than those specified in paragraph (i)(1)(i), (ii), or (iii) of this section, as provided for in paragraph (i)(1)(iv) of this section.

(2) The information specified in paragraphs (k)(2)(i) through (iv) of this section shall be provided in the Notification of Compliance Status, as specified in §63.1439(e)(5).

(i) For each product class, the information specified in paragraphs (k)(2)(i)(A) through (C) of this section.

(A) The operating conditions of this product class, as specified in paragraph (j)(1)(i) of this section.

(B) A list of all products in the product class.

(C) The percent epoxide emission reduction, determined in accordance with paragraph (e) of this section.

(ii) The parameter for each product class, as determined in accordance with paragraph (i)(2) of this section.

(iii) If a combustion, recovery, or recapture device is used in addition to ECO to reduce emissions, the information specified in §63.1430(g)(1).

(iv) If epoxide emissions occur before the end of the ECO, a listing of the time and duration of all such emission episodes that occur during the initial demonstration of batch cycle efficiency.

(3) The information specified in paragraphs (k)(3)(i) through (iii) of this section shall be provided in the Periodic Report, as specified in § 63.1439(e)(6).

(i) Reports of each batch cycle for which an ECO excursion occurred, as defined in paragraph (i)(3) of this section.

(ii) Notification of each batch cycle when the time and duration of epoxide emissions before the end of the ECO, recorded in accordance with paragraph (j)(2)(iv) of this section, exceed the time and duration of the emission episodes during the initial epoxide emission percentage reduction determination, as recorded in paragraph (j)(1)(viii) of this section.

(iii) If a combustion, recovery, or recapture device is used to reduce emissions, the information specified in § 63.1430(h).

(l) *New polyether polyol products.* If an owner or operator wishes to utilize ECO as a control option for a polyether polyol not previously assigned to a product class and reported to the Agency in accordance with either paragraph (k)(2)(i)(B), (l)(1)(ii), or (l)(2)(iii) of this section, the owner or operator shall comply with the provisions of paragraph (l)(1) or (2) of this section.

(1) If the operating conditions of the new polyether polyol are consistent with the operating conditions for an existing product class, the owner or operator shall comply with the requirements in paragraphs (l)(1)(i) and (ii) of this section.

(i) The owner or operator shall update the list of products for the product class required by paragraph (j)(1)(ii) of this section, and shall record the information in paragraphs (j)(1)(i)(A) through (F) of this section for the new product.

(ii) Within 180 days after the production of the new polyether polyol, the owner or operator shall submit a report updating the product list previously submitted for the product class. This information may be submitted along with the next Periodic Report.

(2) If the operating conditions of the new polyether polyol do not conform with the operating characteristics of an existing product class, the owner or operator shall establish a new product class and shall comply with provisions of paragraphs (l)(2)(i) through (iii) of this section.

(i) The owner or operator shall establish the batch cycle percent epoxide emission reduction in accordance with paragraphs (b) through (g) of this section for the product class.

(ii) The owner or operator shall establish the records specified in paragraph (j)(1) of this section for the product class.

(iii) Within 180 days of the production of the new polyether polyol, the owner or operator shall submit a report containing the information specified in paragraphs (k)(2)(i) and (ii) of this section.

(m) *Polyether polyol product changes.* If a change in operation, as defined in paragraph (m)(1) of this section, occurs for a polyether polyol that has been assigned to a product class and reported to the Agency in accordance with paragraph (k)(2)(i)(B), (l)(1)(ii), or (l)(2)(iii) of this section, the owner or operator shall comply with the provisions of paragraphs (m)(2) through (3) of this section.

(1) A change in operation for a polyether polyol is defined as a change in any one of the parameters listed in paragraphs (m)(1)(i) through (ix) of this section.

(i) A significant change in reaction kinetics;

(ii) Use of a different oxide reactant;

(iii) Use of a different EO/PO ratio;

(iv) A lower reaction temperature;

(v) A lower catalyst feed on a mole/mole fraction OH basis;

(vi) A shorter cookout;

(vii) A lower reactor pressure;

(viii) A different type of reaction, (e.g., a self-catalyzed vs. catalyzed reaction); or

(ix) A marked change in reaction conditions (e.g., a markedly different liquid level).

(2) If the operating conditions of the product after the change in operation remain within the operation conditions of the product class to which the product was assigned, the owner or operator shall update the records specified in paragraphs (j)(1)(i)(A) through (F) of this section for the product.

(3) If the operating conditions of the product after the change in operation are outside of the operating conditions

of the product class to which the product was assigned, the owner or operator shall comply with the requirements in paragraph (m)(3)(i) or (ii) of this section, as appropriate.

(i) If the new operating conditions of the polyether polyol are consistent with the operating conditions for another existing product class, the owner or operator shall comply with the requirements in paragraphs (m)(3)(i)(A) and (B) of this section.

(A) The owner or operator shall update the list of products for the product class that the product is leaving, and for the product class that the product is entering, and shall record the new information in paragraphs (j)(1)(i)(A) through (F) of this section for the product.

(B) Within 180 days after the change in operating conditions for the polyether polyol product, the owner or operator shall submit a report updating the product lists previously submitted for the product class. This information may be submitted along with the next Periodic Report.

(ii) If the new operating conditions of the polyether polyol product do not conform with the operating characteristics of an existing product class, the owner or operator shall establish a new product class and shall comply with provisions of paragraphs (m)(3)(ii)(A) through (C) of this section.

(A) The owner or operator shall establish the batch cycle percent epoxide emission reduction in accordance with paragraphs (b) through (g) of this section for the product class.

(B) The owner or operator shall establish the records specified in paragraph (j)(1) of this section for the product class.

(C) Within 180 days of the change in operating conditions for the polyether polyol, the owner or operator shall submit a report containing the information specified in paragraphs (k)(2)(i) and (ii) of this section.

[64 FR 29439, June 1, 1999; 64 FR 31895, June 14, 1999, as amended at 65 FR 26500, May 8, 2000]

§63.1428 Process vent requirements for group determination of PMPUs using a nonepoxide organic HAP to make or modify the product.

(a) *Process vents from batch unit operations.* The owner or operator shall determine, for each PMPU located at an affected source, if the combination of all process vents from batch unit operations that are associated with the use of nonepoxide organic HAP to make or modify the product is a Group 1 combination of batch process vents, as defined in §63.1423. The annual uncontrolled nonepoxide organic HAP emissions, determined in accordance with paragraph (b) of this section, and annual average flow rate, determined in accordance with paragraph (c) of this section, shall be determined for all process vents from batch unit operations associated with the use of a nonepoxide organic HAP to make or modify the product, with the exception of those vents specified in paragraph (i) of this section, at the location after all applicable control techniques have been applied to reduce epoxide emissions in accordance with paragraph (a)(1) or (2) of this section.

(1) If the owner or operator is using a combustion, recovery, or recapture device to reduce epoxide emissions, this location shall be at the exit of the combustion, recovery, or recapture device.

(2) If the owner or operator is using ECO to reduce epoxide emissions, this location shall be at the exit from the batch unit operation. For the purpose of these determinations, the primary condenser operating as a reflux condenser on a reactor or distillation column shall be considered part of the unit operation.

(b) *Determination of annual nonepoxide organic HAP emissions.* The owner or operator shall determine, for each PMPU, the total annual nonepoxide organic HAP emissions from the combination of all process vents from batch unit operations that are associated with the use of a nonepoxide organic HAP to make or modify the product in accordance with paragraphs (b)(1) and (2) of this section.

(1) The annual nonepoxide organic HAP emissions for each process vent

from a batch unit operation associated with the use of a nonepoxide organic HAP to make or modify the product shall be determined using the batch process vent procedures in the NESHAP for Group I Polymers and Resins (40 CFR part 63, subpart U), § 63.488(b).

(2) The owner or operator shall sum the annual nonepoxide organic HAP emissions from all individual process vents from batch unit operations in a PMPU, determined in accordance with paragraph (b)(1) of this section, to obtain the total nonepoxide organic HAP emissions from the combination of process vents associated with the use of a nonepoxide organic HAP to make or modify the product, for the PMPU.

(c) *Minimum emission level exemption.* If the annual emissions of TOC or nonepoxide organic HAP from the combination of process vents from batch unit operations that are associated with the use of nonepoxide organic HAP to make or modify a polyether polyol for a PMPU are less than 11,800 kg/yr, the owner or operator of that PMPU is not required to comply with the provisions in paragraphs (d) and (e) of this section.

(d) *Determination of average flow rate and annual average flow rate.* The owner or operator shall determine, for each PMPU, the total annual average flow rate for the combination of all process vents from batch unit operations that are associated with the use of a nonepoxide organic HAP to make or modify a product in accordance with paragraphs (d)(1) and (2) of this section.

(1) The annual average flow rate for each process vent from batch unit operations that is associated with the use of nonepoxide organic HAP to make or modify the product shall be determined using the batch process vent procedures in the NESHAP for Group I Polymers and Resins (40 CFR part 63, subpart U), § 63.488(e).

(2) The owner or operator shall sum the annual average flow rates from the individual process vents from batch unit operations in a PMPU, determined in accordance with paragraph (d)(1) of this section, to obtain the total annual average flow rate for the combination of process vents associated with the use of a nonepoxide organic HAP to make or modify the product, for the PMPU.

(e) *Determination of cutoff flow rate.* For each PMPU at an affected source that uses nonepoxide organic HAP to make or modify the product, the owner or operator shall calculate the cutoff flow rate using Equation 14.

$$CFR = (0.00437)(AE) - 51.6 \qquad \text{[Equation 14]}$$

Where:

CFR = Cutoff flow rate, standard cubic meters per minute (scmm).

AE = Annual TOC or nonepoxide organic HAP emissions from the combination of process vents from batch unit operations that are associated with the use of nonepoxide organic HAP to make or modify the product, as determined in paragraph (b)(2) of this section, kg/yr.

(f) [Reserved]

(g) *Process changes affecting Group 2 combinations of process vents in a PMPU that are from batch unit operations.* Whenever process changes, as described in paragraph (g)(1) of this section, are made that affect a Group 2 combination of batch process vents and that could reasonably be expected to change the group status from Group 2 to Group 1, the owner or operator shall comply with paragraphs (g)(2) and (3) of this section.

(1) Examples of process changes include, but are not limited to, increases in production capacity or production rate, changes in feedstock type or catalyst type; or whenever there is replacement, removal, or modification of recovery equipment considered part of the batch unit operation. Any change that results in an increase in the annual nonepoxide organic HAP emissions from the estimate used in the previous group determination constitutes a process change for the purpose of these provisions. Process changes do not include: process upsets; unintentional, temporary process

changes; and changes that are within the margin of variation on which the original group determination was based.

(2) For each process affected by a process change, the owner or operator shall redetermine the group status by repeating the procedures specified in paragraphs (b) through (e) of this section, as applicable, and determining if the combination of process vents is a Group 1 combination of batch process vents, as defined in §63.1423. Alternatively, engineering assessment, as described in §63.488(b)(6)(i), may be used to determine the effects of the process change.

(3) Based on the results of paragraph (g)(2) of this section, the owner or operator shall comply with either paragraph (g)(3)(i) or (ii) of this section.

(i) If the redetermination described in paragraph (g)(2) of this section indicates that the group status of the combination of process vents from batch unit operations in a PMPU that are associated with the use of nonepoxide organic HAP to make or modify the product changes from Group 2 to Group 1 as a result of the process change, the owner or operator shall submit a report as specified in §63.1439(e)(6)(iii)(D)(*1*) and shall comply with Group 1 combination of batch process vents provisions in this subpart, as specified in §63.1425(c)(1).

(ii) If the redetermination described in paragraph (g)(2) of this section indicates no change in group status, the owner or operator is not required to submit a report.

(h) *Process vents from continuous unit operations.* (1) The owner or operator shall determine the total resource effectiveness (TRE) index value for each process vent from a continuous unit operation that is associated with the use of nonepoxide organic HAP to make or modify the product. To determine the TRE index value, the owner or operator shall conduct a TRE determination and calculate the TRE index value according to the HON process vent group determination procedures in §63.115(d)(1) or (2) and the TRE equation in §63.115(d)(3). The TRE index value shall be determined at the location after all applicable control techniques have been applied to reduce epoxide emissions in accordance with paragraph (h)(1)(i), (ii), or (iii) of this section.

(i) If the owner or operator uses one or more nonepoxide recovery devices after all control techniques to reduce epoxide emissions, this location shall be after the last nonepoxide recovery device.

(ii) If the owner or operator does not use a nonepoxide recovery device after a combustion, recovery, or recapture device to reduce epoxide emissions, this location shall be at the exit of the combustion, recovery, or recapture device.

(iii) If the owner or operator does not use a nonepoxide recovery device after extended cookout to reduce epoxide emissions, this location shall be at the exit from the continuous unit operation. For the purpose of these determinations, the primary condenser operating as a reflux condenser on a reactor or distillation column shall be considered part of the unit operation.

(2) The owner or operator of a Group 2 continuous process vent shall recalculate the TRE index value as necessary to determine whether the process vent is Group 1 or Group 2, whenever process changes are made that could reasonably be expected to change the process vent to Group 1. Examples of process changes include, but are not limited to, increases in production capacity or production rate, changes in feedstock type or catalyst type, or whenever there is replacement, removal, or addition of recovery equipment. For purposes of this paragraph, process changes do not include: process upsets; unintentional, temporary process changes; and changes that are within the range on which the original TRE calculation was based.

(i) The TRE index value shall be recalculated based on measurements of process vent stream flow rate, TOC, and nonepoxide organic HAP concentrations, and heating values as specified in the HON process vent group determination procedures in §63.115(a), (b), (c), and (d), as applicable, or on best engineering assessment of the effects of the change. Engineering assessments shall meet the specifications in §63.115(d)(1).

(ii) Where the recalculated TRE index value is less than or equal to 1.0, or, where the TRE index value before the process change was greater than 4.0 and the recalculated TRE index value is less than or equal to 4.0 but greater than 1.0, the owner or operator shall submit a report as specified in the process vent reporting and recordkeeping provisions in § 63.1430(j) or (k), and shall comply with the appropriate provisions in the process vent control requirements in § 63.1425 by the dates specified in § 63.1422 (the section describing compliance dates for sources subject to this subpart).

(iii) Where the recalculated TRE index value is greater than 4.0, the owner or operator is not required to submit a report.

(i) *Combination of process vents from batch unit operations and process vents from continuous unit operations.* If an owner or operator combines a process vent from a batch unit operation that is associated with the use of a nonepoxide organic HAP to make or modify the product with a process vent from a continuous unit operation that is associated with the use of a nonepoxide prior to the epoxide control technique, or prior to a nonepoxide recovery device that is after the epoxide control technique, then the provisions in paragraphs (i)(1) and (2) of this section shall apply.

(1) The process vent from the batch unit operation is not required to be included in the group determination required by paragraphs (a) through (e) of this section.

(2) The TRE index value of the combined stream shall be determined in accordance with paragraph (h) of this section, and the TRE index value shall be calculated during a period when nonepoxide organic HAP emissions are being generated by the batch unit operation.

[64 FR 29439, June 1, 1999, as amended at 65 FR 26501, May 8, 2000]

§ 63.1429 Process vent monitoring requirements.

(a) *Monitoring equipment requirements.* The owner or operator of a process vent that uses a combustion, recovery, or recapture device to comply with the process vent control requirements in § 63.1425(b)(1), (b)(2), (c)(1), (c)(3), or (d) shall install monitoring equipment specified in paragraph (a)(1), (2), (3), (4), (5), (6), or (7) of this section, depending on the type of device used. Also, the owner or operator that uses a recovery or recapture device to comply with § 63.1425(c)(4) shall install monitoring equipment as specified in paragraph (a)(4), (5), (6), or (7) of this section. All monitoring equipment shall be installed, calibrated, maintained, and operated according to manufacturers' specifications or other written procedures that provide adequate assurance that the equipment would reasonably be expected to monitor accurately.

(1) Where an incinerator is used, a temperature monitoring device equipped with a continuous recorder is required.

(i) Where an incinerator other than a catalytic incinerator is used, a temperature monitoring device shall be installed in the firebox or in the ductwork immediately downstream of the firebox in a position before any substantial heat exchange occurs.

(ii) Where a catalytic incinerator is used, temperature monitoring devices shall be installed in the gas stream immediately before and after the catalyst bed.

(2) Where a flare is used, the following monitoring equipment is required: a device (including but not limited to a thermocouple, ultra-violet beam sensor, or infrared sensor) capable of continuously detecting the presence of a pilot flame.

(3) Where a boiler or process heater of less than 44 megawatts design heat input capacity is used, the following monitoring equipment is required: a temperature monitoring device in the firebox equipped with a continuous recorder. Any boiler or process heater in which all process vent streams are introduced with primary fuel or are used as the primary fuel is exempt from this requirement.

(4) Where an absorber is used, a scrubbing liquid flow rate meter or a pressure monitoring device is required and should be equipped with a continuous recorder. If an acid or base absorbent is used, a pH monitoring device

to monitor scrubber effluent is also required. If two or more absorbers in series are used, a scrubbing liquid flow rate meter, or a pressure monitoring device, equipped with a continuous recorder, is required for each absorber in the series. An owner or operator may submit a request to instead install the scrubbing liquid flow rate meter, or a pressure monitoring device, equipped with a continuous recorder, on only the final absorber in a series, in accordance with the alternative parameter monitoring reporting requirements in §63.1439(f).

(5) Where a condenser is used, a condenser exit temperature (product side) monitoring device equipped with a continuous recorder is required.

(6) Where a carbon adsorber is used, an integrating regeneration stream flow monitoring device having an accuracy of +10 percent or better, capable of recording the total regeneration stream mass or volumetric flow for each regeneration cycle, and a carbon bed temperature monitoring device, capable of recording the carbon bed temperature after each regeneration and within 15 minutes of completing any cooling cycle are required.

(7) As an alternative to paragraphs (a)(4) through (6) of this section, the owner or operator may install an organic monitoring device equipped with a continuous recorder.

(b) *Alternative parameters.* An owner or operator of a process vent may request approval to monitor parameters other than those listed in paragraph (a) of this section. The request shall be submitted according to the procedures specified in the process vent reporting and recordkeeping requirements in §63.1430(j) and the alternative parameter monitoring reporting requirements in §63.1439(f). Approval shall be requested if the owner or operator:

(1) Uses a combustion device other than an incinerator, boiler, process heater, or flare; or

(2) For a Group 2 continuous process vent, maintains a TRE greater than 1.0 but less than or equal to 4.0 without a recovery device or with a recovery device other than the recovery devices listed in paragraph (a) of this section; or

(3) Uses one of the combustion, recovery, or recapture devices listed in paragraph (a) of this section, but seeks to monitor a parameter other than those specified in paragraph (a) of this section.

(c) *Monitoring of bypass lines.* The owner or operator of a process vent using a process vent system that contains bypass lines that could divert a process vent stream away from the combustion, recovery, or recapture device used to comply with the process vent control requirements in §63.1425(b), (c), or (d) shall comply with paragraph (c)(1) or (2) of this section. Equipment such as low leg drains, high point bleeds, analyzer vents, open-ended valves or lines, and pressure relief valves needed for safety purposes are not subject to paragraphs (c)(1) or (2) of this section.

(1) Properly install, maintain, and operate a flow indicator that takes a reading at least once at approximately equal intervals of about 15 minutes. Records shall be generated as specified in the process vent reporting and recordkeeping provisions in §63.1430(d)(3). The flow indicator shall be installed at the entrance to any bypass line that could divert emissions away from the combustion, recovery, or recapture device and to the atmosphere; or

(2) Secure the bypass line valve in the non-diverting position with a car-seal or a lock-and-key type configuration. A visual inspection of the seal or closure mechanism shall be performed at least once every month to ensure that the valve is maintained in the non-diverting position and emissions are not diverted through the bypass line. Records shall be generated as specified in the process vent reporting and recordkeeping provisions in §63.1430(d)(4)(i).

(d) *Establishment of parameter monitoring levels.* Parameter monitoring levels for process vents from continuous or batch unit operations using a combustion, recovery, or recapture device to comply with the process vent control requirements in §63.1425(b), (c), or (d) shall be established as specified in paragraphs (d)(1) through (3) of this section.

(1) For each parameter monitored under paragraph (a) or (b) of this section, the owner or operator shall establish a level, defined as either a maximum or minimum operating parameter as denoted in Table 5 of this subpart (the table listing the monitoring, recordkeeping, and reporting requirements for process vents from batch unit operations), that indicates that the combustion, recovery, or recapture device is operated in a manner to ensure compliance with the provisions of this subpart. The level shall be established in accordance with the procedures specified in the process vent control requirements in § 63.1430(d). The level may be based upon a prior performance test conducted for determining compliance with a regulation promulgated by the EPA, and the owner or operator is not required to conduct a performance test under the process vent requirements for determining organic HAP concentration, control efficiency, and aggregated organic HAP emission reductions in § 63.1426, provided that the prior performance test meets the conditions of § 63.1426(b)(3).

(2) The established level, along with supporting documentation, shall be submitted in the Notification of Compliance Status or the operating permit application as required in the Notification of Compliance Status requirements in § 63.1439(e)(5) or in the operating permit application requirements in § 63.1439(e)(8), respectively.

(3) The operating day shall be defined as part of establishing the parameter monitoring level and shall be submitted with the information in paragraph (d)(2) of this section. The definition of operating day shall specify the time(s) at which an operating day begins and ends.

§ 63.1430 Process vent reporting and recordkeeping requirements.

(a) [Reserved]

(b) *Records to demonstrate compliance.* The owner or operator complying with the process vent control requirements in § 63.1425(b), (c), or (d) shall keep the following records, as applicable, readily accessible:

(1) When using a flare to comply with the process vent control requirements in § 63.1425(b)(2)(i), (c)(1)(i), (c)(3)(i), or (d)(1):

(i) The flare design (i.e., steam-assisted, air-assisted, or non-assisted);

(ii) All visible emission readings, heat content determinations, flow rate determinations, and exit velocity determinations made during the flare specification determination required by § 63.1437(c); and

(iii) All periods during the flare specification determination required by § 63.1437(c) when all pilot flames are absent.

(2) The following information when using a combustion, recovery, or recapture device (other than a flare) to achieve compliance with the process vent control requirements in § 63.1425(b), (c), or (d):

(i) For a combustion, recovery, or recapture device being used to comply with a percent reduction requirement of § 63.1425(b)(1)(i), (b)(2)(ii), (c)(1)(ii), (c)(3)(ii), or (d)(2), or the annual epoxide emission limitation in § 63.1425(b)(1)(iii) or (b)(2)(iv), the percent reduction of organic HAP or TOC achieved, as determined using the procedures specified in the process vent requirements in § 63.1426;

(ii) For a combustion device being used to comply with an outlet concentration limitation of § 63.1425(b)(1)(ii) or (b)(2)(iii), the concentration of organic HAP or TOC outlet of the combustion device, as determined using the procedures specified in the process vent requirements in § 63.1426;

(iii) For a boiler or process heater, a description of the location at which the process vent stream is introduced into the boiler or process heater;

(iv) For a boiler or process heater with a design heat input capacity of less than 44 megawatts and where the process vent stream is introduced with combustion air or is used as a secondary fuel and is not mixed with the primary fuel, the percent reduction of organic HAP or TOC achieved, as determined using the procedures specified in § 63.1426.

(c) *Records related to the establishment of parameter monitoring levels.* For each parameter monitored according to the process vent monitoring requirements

in §63.1429(a) and Table 5 of this subpart, or for alternate parameters and/or parameters for alternate control techniques monitored according to the alternative parameter monitoring reporting requirements in §63.1439(f) as allowed under §63.1429(b), maintain documentation showing the establishment of the level that indicates that the combustion, recovery, or recapture device is operated in a manner to ensure compliance with the provisions of this subpart, as required by the process vent monitoring requirements in §63.1429(d).

(d) *Records to demonstrate continuous compliance.* The owner or operator that uses a combustion, recovery, or recapture device to comply with the process vent control requirements in §63.1425(b), (c), or (d) shall keep the following records readily accessible:

(1) Continuous records of the equipment operating parameters specified to be monitored under the process vent monitoring requirements in §63.1429(a) as applicable, and listed in Table 5 of this subpart, or specified by the Administrator in accordance with the alternative parameter monitoring reporting requirements in §63.1439(f), as allowed under §63.1429(b). These records shall be kept as specified under §63.1439(d), except as specified in paragraphs (d)(1)(i) and (ii) of this section.

(i) For flares, the records specified in Table 5 of this subpart shall be maintained in place of continuous records.

(ii) For carbon adsorbers used for process vents from batch unit operations, the records specified in Table 5 of this subpart shall be maintained in place of daily averages.

(2) Records of the daily average value for process vents from continuous unit operations or batch unit operations of each continuously monitored parameter, except as provided in paragraphs (d)(2)(i) and (ii) of this section.

(i) Monitoring data recorded during periods of monitoring system breakdowns, repairs, calibration checks, and zero (low-level) and high-level adjustments shall not be included in computing the daily averages. In addition, monitoring data recorded during periods of non-operation of the process (or specific portion thereof) resulting in cessation of organic HAP emissions, (or periods of start-up, shutdown, or malfunction) shall not be included in computing the daily averages.

(ii) If all recorded values for a monitored parameter during an operating day are above the minimum or below the maximum parameter monitoring level established in accordance with the process vent monitoring requirements in §63.1429(d), the owner or operator may record that all values were above the minimum or below the maximum level established, rather than calculating and recording a daily average for that operating day.

(3) Hourly records of whether the flow indicator for bypass lines specified under §63.1429(c)(1) was operating and whether a diversion was detected at any time during the hour. Also, records of the time(s) of all periods when the process vent was diverted from the combustion, recovery, or recapture device, or the flow indicator specified in §63.1429(c)(1) was not operating.

(4) Where a seal or closure mechanism is used to comply with the process vent monitoring requirements for bypass lines in §63.1429(c)(2), hourly records of flow are not required. For compliance with §63.1429(c)(2), the owner or operator shall record whether the monthly visual inspection of the seals or closure mechanism has been done, and shall record the occurrence of all periods when the seal mechanism is broken, the bypass line valve position has changed, or the key for a lock-and-key type configuration has been checked out, and records of any car-seal that has been broken.

(5) Records specifying the times and duration of periods of monitoring system breakdowns, repairs, calibration checks, and zero (low-level) and high level adjustments. In addition, records specifying any other periods of process or combustion, recovery, or recapture device operation when monitors are not operating.

(e) *Records related to the group determination for process vents that are associated with the use of nonepoxide organic HAP to make or modify the product.* (1) *Process vents from batch unit operations.* Except as provided in paragraphs (e)(1)(vi) and (vii) of this section, the owner or operator of an affected source shall maintain the records specified in

paragraphs (e)(1)(i) through (v) of this section for each PMPU that uses a nonepoxide organic HAP to make or modify the product in batch unit operations. The records required to be maintained by this paragraph are limited to the information developed and used to make the group determination under the process vent requirements for processes using a nonepoxide organic HAP to make or modify the product in § 63.1428(a) through (e), as appropriate. If an owner or operator did not need to develop certain information (e.g., annual average flow rate) to determine the group status, the owner or operator is not required to develop additional information. The owner or operator may elect Group 1 status for process vents without making a Group 1/Group 2 determination. In such event, none of the records specified in paragraphs (e)(1)(i) through (v) are required.

(i) A description of, and an emission estimate for, each batch emission episode, and the total emissions associated with one batch cycle for each unique product class made in the PMPU.

(ii) Total annual uncontrolled TOC or nonepoxide organic HAP emissions from the combination of process vents from batch unit operations associated with the use of nonepoxide organic HAP to make or modify the product, as determined in accordance with the process vent requirements for group determinations in § 63.1428(b).

(iii) The annual average flow rate for the combination of process vents from batch unit operations associated with the use of organic HAP to make or modify the product, as determined in accordance with the process vent requirements for group determinations in § 63.1428(d).

(iv) The cutoff flow rate, determined in accordance with the process vent requirements for group determinations in § 63.1428(e).

(v) The results of the PMPU group determination (i.e., whether the combination of process vents is Group 1 or Group 2).

(vi) If the combination of all process vents from batch unit operations associated with the use of an organic HAP to make or modify the product is subject to the Group 1 batch process vent control requirements for nonepoxide HAP emissions from making or modifying the product in § 63.1425((c)(1), none of the records in paragraphs (e)(1)(i) through (v) of this section are required.

(vii) If the total annual emissions from the combination of process vents from batch unit operations associated with the use of an organic HAP to make or modify the product are less than 11,800 kg per year, only the records in paragraphs (e)(1)(i) and (ii) of this section are required.

(2) *Process vents from continuous unit operations.* The owner or operator of an affected source that uses nonepoxide organic HAP to make or modify the product in continuous unit operations shall keep records regarding the measurements and calculations performed to determine the TRE index value of each process vent stream. The owner or operator of Group 1 continuous process vents that are subject to the control requirements of § 63.1425(c)(3) is not required to keep these records.

(f) *Records for Group 2 process vents that are associated with the use of nonepoxide organic HAP to make or modify the product.* The following records shall be maintained for PMPUs with a Group 2 combination of batch process vents and/or one or more Group 2 continuous process vents.

(1) *Process vents from batch unit operations—emission records.* The owner or operator shall maintain records of the combined total annual nonepoxide organic HAP emissions from process vents associated with the use of nonepoxide organic HAP to make or modify the product for each PMPU where the combination of these process vents is classified as Group 2.

(2) *Process vents from continuous unit operations—monitoring records for vents with TRE between 1.0 and 4.0.* The owner or operator using a recovery device or other means to achieve and maintain a TRE index value greater than 1.0 but less than 4.0 as specified in the HON process vent requirements in § 63.113(a)(3) or § 63.113(d) shall keep the following records readily accessible:

(i) Continuous records of the equipment operating parameters specified to

be monitored under §63.114(b) and listed in Table 5 of this subpart or specified by the Administrator in accordance with §63.114(c) and §63.117(e); and

(ii) Records of the daily average value of each continuously monitored parameter for each operating day determined according to the procedures specified in §63.152(f). If carbon adsorber regeneration stream flow and carbon bed regeneration temperature are monitored, the records specified in Table 5 of this subpart shall be kept instead of the daily averages.

(3) *Process vents from continuous unit operations—records related to process changes*. The owner or operator subject to the provisions of this subpart who has elected to demonstrate compliance with the TRE index value greater than 4.0 under §63.113(e) or greater than 1.0 under §63.113(a)(3) or §63.113(d) shall keep readily accessible records of:

(i) Any process changes as defined in §63.115(e); and

(ii) Any recalculation of the TRE index value pursuant to §63.115(e).

(4) *Process vents from continuous unit operations—records for vents with a flow rate less than 0.005 standard cubic meter per minute*. The owner or operator who elects to comply by maintaining a flow rate less than 0.005 standard cubic meter per minute under §63.113(f), shall keep readily accessible records of:

(i) Any process changes as defined in §63.115(e) that increase the process vent stream flow rate;

(ii) Any recalculation or measurement of the flow rate pursuant to §63.115(e); and

(iii) If the flow rate increases to 0.005 standard cubic meter per minute or greater as a result of the process change, the TRE determination performed according to the procedures of §63.115(d).

(5) *Process vents from continuous unit operations—records for vents with an organic HAP concentration less than 50 parts per million*. The owner or operator who elects to comply by maintaining an organic HAP concentration less than 50 parts per million by volume organic HAP concentration under §63.113(g) shall keep readily accessible records of:

(i) Any process changes as defined in §63.115(e) that increase the organic HAP concentration of the process vent stream;

(ii) Any recalculation or measurement of the concentration pursuant to §63.115(e); and

(iii) If the organic HAP concentration increases to 50 parts per million by volume or greater as a result of the process change, the TRE determination performed according to the procedures of §63.115(d).

(g) *Notification of Compliance Status*. The owner or operator of an affected source shall submit the information specified in paragraphs (g)(1) through (3) of this section, as appropriate, as part of the Notification of Compliance Status specified in §63.1439(e)(5).

(1) For the owner or operator complying with the process vent control requirements in §63.1425(b), (c)(1), (c)(3), or (d), the information specified in paragraph (b) of this section related to the compliance demonstration, and the information specified in paragraph (c) of this section related to the establishment of parameter monitoring levels,

(2) For each PMPU where the combination of process vents from batch unit operations that are associated with the use of nonepoxide organic HAP to make or modify the product is Group 2, the information related to the group determination specified in paragraph (e)(1) of this section.

(3) For each process vent from a continuous unit operation that is associated with the use of nonepoxide organic HAP to make or modify the product that is Group 2, the information related to the group determination specified in paragraph (e)(2) of this section.

(h) *Periodic Reports*. The owner or operator of an affected source shall submit Periodic Reports of the recorded information specified in paragraphs (h)(1) through (6) of this section, as appropriate, according to the schedule for submitting Periodic Reports in §63.1439(e)(6)(i).

(1) Reports of daily average values of monitored parameters for all operating days when the daily average values recorded under paragraph (d)(2) of this section were above the maximum, or below the minimum, level established in the Notification of Compliance Status or operating permit.

(2) Reports of the duration of periods when monitoring data are not collected for each excursion caused by insufficient monitoring data as defined in § 63.1438(f)(1)(iv), (f)(2)(i)(B), or (f)(3)(ii).

(3) Reports of the times and durations of all periods recorded under paragraph (d)(3) of this section when the process vent stream is diverted from the combustion, recovery, or recapture device through a bypass line.

(4) Reports of all periods recorded under paragraph (d)(4) of this section in which the seal mechanism is broken, the bypass line valve position has changed, or the key to unlock the bypass line valve was checked out.

(5) Reports of the times and durations of all periods recorded under paragraph (d)(1)(i) of this section in which all pilot flames of a flare were absent.

(6) Reports of all carbon bed regeneration cycles during which the parameters recorded under paragraph (d)(1)(ii) of this section were above the maximum, or below the minimum, levels established in the Notification of Compliance Status or operating permit.

(i) *Reports of process changes.* Whenever a process change, as defined in § 63.1420(g)(3), is made that causes a Group 2 combination of batch process vents at a PMPU that are associated with the use of nonepoxide organic HAP to make or modify the product to become Group 1, the owner or operator shall submit a report within 180 days after the process change is made or the information regarding the process change is known to the owner or operator. This report may be included in the next Periodic Report or in a separate submittal to the Administrator, as specified in § 63.1439(e)(6)(iii)(D)(1). A description of the process change shall be submitted with the report.

(j) *Reporting requirements for Group 2 continuous process vents.* (1) Whenever a process change, as defined in § 63.1420(g)(3), is made that causes a Group 2 continuous process vent with a TRE greater than 4.0 to become a Group 2 continuous process vent with a TRE less than 4.0, the owner or operator shall submit a report within 180 calendar days after the process change is made or the information regarding the process change is known, unless the flow rate is less than 0.005 standard cubic meters per minute. The report may be submitted as part of the next periodic report. The report shall include:

(i) A description of the process change;

(ii) The results of the recalculation of the TRE index value required under § 63.1428(h)(2), and recorded under paragraph (f)(3) of this section; and

(iii) A statement that the owner or operator will comply with the process vent monitoring requirements specified in § 63.1429, as appropriate.

(2) Whenever a process change, as defined in § 63.1420(g)(3), is made that causes a Group 2 continuous process vent with a flow rate less than 0.005 standard cubic meters per minute to become a Group 2 continuous process vent with a flow rate of 0.005 standard cubic meters per minute or greater, the owner or operator shall submit a report within 180 calendar days after the process change is made or the information regarding the process change is known, unless the organic HAP concentration is less than 50 ppmv. The report may be submitted as part of the next periodic report. The report shall include:

(i) A description of the process change;

(ii) The results of the calculation of the TRE index value required under § 63.1428(h)(2), and recorded under paragraph (f)(3) of this section; and

(iii) A statement that the owner or operator will comply with the process vent monitoring requirements specified in § 63.1429, as appropriate.

(3) Whenever a process change, as defined in § 63.1420(g)(3), is made that causes a Group 2 continuous process vent with an organic HAP concentration less than 50 ppmv to become a Group 2 continuous process vent with an organic HAP concentration of 50 ppmv or greater and a TRE index value less than 4.0, the owner or operator shall submit a report within 180 calendar days after the process change is made or the information regarding the process change is known, unless the flow rate is less than 0.005 standard cubic meters per minute. The report may be submitted as part of the next

periodic report. The report shall include:

(i) A description of the process change;

(ii) The results of the calculation of the TRE index value required under §63.1428(h)(2), and recorded under paragraph (f)(3) of this section; and

(iii) A statement that the owner or operator will comply with the process vent monitoring requirements specified in §63.1429, as appropriate.

(k) *Alternative requests.* If an owner or operator uses a combustion, recovery, or recapture device other than those specified in the process vent monitoring requirements in §63.1429(a)(1) through (7) and listed in Table 5 of this subpart; requests approval to monitor a parameter other than those specified in §63.1429(a)(1) through (7) and listed in Table 5 of this subpart; or uses ECO and requests to monitor a parameter other than those listed in §63.1427(i)(1)(i) through (iii), as allowed under §63.1427(i)(1)(iv), the owner or operator shall submit a description of planned reporting and recordkeeping procedures, as specified in §63.1439(f)(3), as part of the Precompliance Report as required under §63.1439(e)(4), or to the Administrator as a separate submittal. The Administrator will specify appropriate reporting and recordkeeping requirements as part of the review of the Precompliance Report.

[64 FR 29439, June 1, 1999, as amended at 65 FR 26501, May 8, 2000]

§63.1431 Process vent annual epoxides emission factor plan requirements.

(a) *Applicability of emission factor plan requirements.* An owner or operator electing to comply with an annual epoxide emission factor limitation in §63.1425(b)(1)(iii) or (b)(2)(iv) shall develop and implement an epoxides emission factor plan in accordance with the provisions of this section.

(b) *Emission factor plan requirements.* The owner or operator shall develop an epoxides emission factor plan.

(1) If epoxide emissions are maintained below the epoxide emission factor limitation through the use of a combustion, recovery, or recapture device (without extended cookout), the owner or operator shall develop and implement the plan in accordance with paragraph (c) of this section.

(2) If epoxide emissions are maintained below the epoxide emission factor limitation through the use of extended cookout (without a combustion, recovery, or recapture device), the owner or operator shall develop and implement the plan in accordance with paragraph (d) of this section.

(3) If epoxide emissions are maintained below the epoxide emission factor limitation through the use of extended cookout in conjunction with a combustion, recovery, or recapture device, the owner or operator shall develop and implement the plan in accordance with paragraph (e) of this section.

(c) *Compliance with epoxide emission factor limitation using a combustion, recovery, or recapture device.* (1) The owner or operator shall notify the Agency of the intent to use a combustion, recovery, or recapture device to comply with the epoxide emission factor limitation in §63.1425(b)(1)(iii) or (b)(2)(iv). The owner or operator shall prepare an estimate of the annual epoxide emissions and the actual production rate in accordance with paragraphs (c)(1)(i) through (iv) of this section. This notification and emission estimate shall be submitted in the Precompliance Report as specified in §63.1439(e)(4), or in the operating permit application, as allowed in §63.1439(e)(8).

(i) Annual uncontrolled epoxide emissions. These emission estimates shall be determined in accordance with the batch process vent group determination procedures in the NESHAP for Group I Polymers and Resins (40 CFR part 63, subpart U, §63.488(b)) and shall be based on anticipated production.

(ii) A description of the combustion, recovery, or recapture device, along with the expected percent efficiency.

(iii) Annual emissions after the combustion, recovery, or recapture device. The expected annual emissions after control shall be determined using Equation 15.

$$AE_{control} = \left(AE_{uncontrolled}\right)\left[\left(1 - \frac{R}{100}\right)\right] \qquad \text{[Equation 15]}$$

Where:

$AE_{control}$ = Annual epoxide emissions after control, kg/yr.

$AE_{uncontrolled}$ = Annual uncontrolled epoxide emissions, determined in accordance with paragraph (c)(1)(i) of this section, kg/yr.

R = Expected control efficiency of the combustion, recovery, or recapture device, percent, as determined in § 63.1426(c).

(iv) The actual annual production rate means the annual mass of polyether polyol product produced from the applicable PMPU. This production rate shall be for the same annual time period as the annual emission estimate as calculated in accordance with paragraph (c)(1)(iii) of this section.

(2) The owner or operator shall conduct a performance test in accordance with § 63.1426(c) to determine the epoxide control efficiency of the combustion, recovery, or recapture device. The owner or operator shall then recalculate the annual epoxide emissions after control using Equation 15, except that the control efficiency, R, shall be the measured control efficiency. This information shall be submitted as part of the Notification of Compliance Status, as provided in § 63.1439(e)(5).

(3) The owner or operator shall comply with the process vent monitoring provisions in § 63.1429.

(4) The owner or operator shall comply with the process vent recordkeeping requirements in paragraphs § 63.1430(b) through (d), and the process vent reporting requirements in § 63.1430(g)(1) and (h).

(d) *Compliance with epoxide emission factor limitation using extended cookout.* (1) The owner or operator shall notify the Agency of the intent to use extended cookout to comply with the epoxide emission factor limitation in § 63.1425(b)(1)(iii) or (b)(2)(iv). The owner or operator shall prepare an estimate of the annual epoxide emissions after the extended cookout. This notification and emission estimate shall be submitted in the Precompliance Report as specified in § 63.1439(e)(4), or in the operating permit application, as allowed in § 63.1439(e)(8).

(2) The owner or operator shall determine the annual epoxide emissions in accordance with § 63.1427(d), based on anticipated production. This information shall be submitted as part of the Notification of Compliance Status, as provided in § 63.1439(e)(5).

(3) The owner or operator shall comply with the ECO monitoring provisions in § 63.1427(i).

(4) The owner or operator shall comply with the process vent recordkeeping and reporting requirements in § 63.1430.

(e) *Compliance with the epoxide emission factor limitation through the use of extended cookout in conjunction with one or more combustion, recovery, and/or recapture device.* (1) The owner or operator shall notify the Agency of the intent to use extended cookout in conjunction with one or more combustion, recovery, and/or recapture device to comply with the annual epoxide emission factor limitation in § 63.1425(b)(1)(iii) or (b)(2)(iv). The owner or operator shall prepare an estimate of the annual epoxide emissions after control. This notification and emission estimate shall be submitted in the Precompliance Report as specified in § 63.1439(e)(4), or in the operating permit application, as allowed under § 63.1439(e)(8).

(2) The owner or operator shall determine the annual epoxide emissions after control. This information shall be submitted as part of the Notification of Compliance Status, as provided in § 63.1439(e)(5).

(3) The owner or operator shall comply with the ECO monitoring provisions in § 63.1427(i).

(4) The owner or operator shall comply with the ECO recordkeeping and reporting requirements in § 63.1427(j) and (k).

(f) *Compliance with epoxide emission factor limitation without using extended*

cookout or a combustion, recovery, or recapture device. (1) The owner or operator shall notify the Agency of the intent to comply with the epoxide emission factor limitation in § 63.1425(b)(1)(iii) or (b)(2)(iv) without the use of ECO or a combustion, recovery, or recapture device. The owner or operator shall prepare an estimate of the annual epoxide emissions. This notification and emission estimate shall be submitted in the Precompliance Report as specified in § 63.1439(e)(4), or in the operating permit application, as allowed in § 63.1439(e)(8).

(2) Each year after the compliance date, the owner or operator shall calculate the epoxides emission factor for the previous year. This information shall be submitted in the second Periodic Report submitted each year, as specified in § 63.1439(e)(6).

§ 63.1432 Storage vessel provisions.

(a) For each storage vessel located at an affected source, the owner or operator shall comply with the HON storage vessel requirements of §§ 63.119 through 63.123 and the HON leak inspection provisions in § 63.148, with the differences noted in paragraphs (b) through (p) of this section, for the purposes of this subpart.

(b) When the term ''storage vessel'' is used in the HON storage vessel requirements in §§ 63.119 through 63.123, the definition of this term in § 63.1423 shall apply for the purposes of this subpart.

(c) When the term ''Group 1 storage vessel'' is used in the HON storage vessel requirements in §§ 63.119 through 63.123, the definition of this term in § 63.1423 shall apply for the purposes of this subpart.

(d) When the term ''Group 2 storage vessel'' is used in the HON storage vessel requirements in §§ 63.119 through 63.123, the definition of this term in § 63.1423 shall apply for the purposes of this subpart.

(e) When the HON storage vessel requirements in § 63.119 refer to ''December 31, 1992,'' the phrase ''September 4, 1997'' shall apply instead, for the purposes of this subpart.

(f) When the HON storage vessel requirements in § 63.119 refer to ''April 22, 1994,'' the phrase ''June 1, 1999,'' shall apply instead, for the purposes of this subpart.

(g) The owner or operator of an affected source shall comply with this paragraph instead of § 63.120(d)(1)(ii) for the purposes of this subpart. If the combustion, recovery, or recapture device used to comply with § 63.119(e) is also used to comply with any of the requirements found in §§ 63.1425 through 63.1431 and/or § 63.1433, the performance test required in or accepted by §§ 63.1425 through 63.1431 and/or § 63.1433 is acceptable for demonstrating compliance with the HON storage vessel requirements in § 63.119(e), for the purposes of this subpart. The owner or operator will not be required to prepare a design evaluation for the combustion, recovery, or recapture device as described in § 63.120(d)(1)(i), if the performance test meets the criteria specified in paragraphs (g)(1) and (2) of this section.

(1) The performance test demonstrates that the combustion, recovery, or recapture device achieves greater than or equal to the required control efficiency specified in the HON storage vessel requirements in § 63.119(e)(1) or (2), as applicable; and

(2) The performance test is submitted as part of the Notification of Compliance Status required by § 63.1439(e)(5).

(h) When the HON storage vessel requirements in §§ 63.120(d)(3)(i), 63.120(d)(5), and 63.122(g)(2) use the term ''range,'' the term ''level'' shall apply instead for the purposes of this subpart.

(i) For purposes of this subpart, the monitoring plan required by the HON storage vessel requirements in § 63.120(d)(2) shall specify for which combustion, recovery, or recapture device the owner or operator has selected to follow the procedures for continuous monitoring specified in § 63.1438. For the combustion, recovery, or recapture device(s) for which the owner or operator has selected not to follow the procedures for continuous monitoring specified in § 63.1438, the monitoring plan shall include a description of the parameter(s) to be monitored to ensure that the combustion, recovery, or recapture device is being properly operated and maintained, an explanation of the criteria used for selection of that parameter(s), and the frequency with

which monitoring will be performed (e.g., when the liquid level in the storage vessel is being raised), as specified in § 63.120(d)(2)(i).

(j) For purposes of this subpart, the monitoring plan required by § 63.122(b) shall be included in the Notification of Compliance Status required by § 63.1439(e)(5).

(k) When the HON Notification of Compliance Status requirements contained in § 63.152(b) are referred to in §§ 63.120, 63.122, and 63.123, the Notification of Compliance Status requirements contained in § 63.1439(e)(5) shall apply for the purposes of this subpart.

(l) When the HON Periodic Report requirements contained in § 63.152(c) are referred to in §§ 63.120 and 63.122, the Periodic Report requirements contained in § 63.1439(e)(6) shall apply for the purposes of this subpart.

(m) When other reports as required in § 63.152(d) are referred to in § 63.122, the reporting requirements contained in § 63.1439(e)(7) shall apply for the purposes of this subpart.

(n) When the HON Initial Notification requirements contained in § 63.151(b) are referred to in § 63.119 through § 63.123, the owner or operator shall comply with the Initial Notification requirements contained in § 63.1439(e)(3), for the purposes of this subpart.

(o) When the determination of equivalence criteria in § 63.102(b) are referred to in the HON storage vessel requirements in § 63.121(a), the General Provisions' alternative nonopacity emission provisions in § 63.6(g) shall apply for the purposes of this subpart.

(p) The compliance date for storage vessels at affected sources subject to the provisions of this section is specified in § 63.1422.

(q) In addition to the records required by § 63.123, the owner or operator of each storage vessel that is complying with § 63.119(e) and that has an applicable monitoring plan in accordance with § 63.120(d)(2) that does not specify continuous monitoring, shall maintain records of all times when the storage tank is being filled (i.e., when the liquid level in the storage vessel is being raised). These records shall consist of documentation of the time when each filling period begins and ends.

[64 FR 29439, June 1, 1999, as amended at 65 FR 26501, May 8, 2000]

§ 63.1433 Wastewater provisions.

(a) *Process wastewater*. Except as specified in paragraph (c) of this section, the owner or operator of each affected source shall comply with the HON wastewater requirements in §§ 63.132 through 63.147 for each process wastewater stream originating at an affected source, with the HON leak inspection requirements in § 63.148, and with the HON requirements in § 63.149 for equipment that is subject to § 63.149, with the differences noted in paragraphs (a)(1) through (20) of this section. Further, the owner or operator of each affected source shall comply with the requirements of § 63.105(a) for maintenance wastewater, as specified in paragraph (b) of this section.

(1) Owners and operators of affected sources are not required to comply with the HON new source wastewater requirements in § 63.132(b)(1) and § 63.132(d) for the purposes of this subpart. Owners or operators of all new affected sources, as defined in this subpart, shall comply with the HON requirements for existing sources in §§ 63.132 through 63.149, with the exceptions noted in paragraphs (a)(2) through (20) of this section.

(2) The provisions of paragraphs (a)(2)(i), (ii), and (a)(10)(iii) of this section clarify the organic HAP that an owner or operator shall consider when complying with the requirements of §§ 63.132 through 63.149.

(i) Owners and operators are exempt from all requirements in §§ 63.132 through 63.149 that pertain solely and exclusively to organic HAP listed on Table 8 of 40 CFR part 63, subpart G.

(ii) When the HON requirements in §§ 63.132 through 63.149 refer to Table 9 compounds, the owner or operator is only required to consider compounds that meet the definition of organic HAP in § 63.1423 and that are listed in Table 9 of 40 CFR part 63, subpart G, for the purposes of this subpart.

(iii) When §§ 63.132 through 63.149 refer to compounds in Table 36 of 40 CFR part 63, subpart G, or compounds in List 1 or List 2 of Table 36 of 40 CFR

part 63, subpart G, the owner or operator is only required to consider compounds that meet the definition of organic HAP in §63.1423 and that are listed on Table 36 of 40 CFR part 63, subpart G, for the purposes of this subpart.

(3) When the determination of equivalence criteria in §63.102(b) is referred to in §§63.132, 63.133, and 63.137, the General Provisions' alternative nonopacity emission standard provisions in §63.6(g) shall apply for the purposes of this subpart.

(4) When the HON storage vessel requirements contained in §§63.119 through 63.123 are referred to in §§63.132 through 63.148, the HON storage vessel requirements in §§63.119 through 63.123 are applicable, with the exception of the differences referred to in the storage vessel requirements in §63.1432, for the purposes of this subpart.

(5) When the HON process wastewater reporting requirements in §63.146(a) require the submission of a request for approval to monitor alternative parameters according to the procedures specified in §63.151(f) or (g), the owner or operator requesting to monitor alternative parameters shall follow the procedures specified in §63.1439(f) for the purposes of this subpart.

(6) When the HON process wastewater recordkeeping requirements in §63.147(d) require the owner or operator to keep records of the daily average value of each continuously monitored parameter for each operating day as specified in the HON recordkeeping provisions in §63.152(f), the owner or operator shall instead keep records of the daily average value of each continuously monitored parameter as specified in §63.1439(d), for the purposes of this subpart.

(7) When §§63.132 through 63.149 refer to an ''existing source,'' the term *existing affected source*, as defined in §63.1420(a)(2), shall apply for the purposes of this subpart.

(8) When the HON requirements in §§63.132 through 63.149 refer to a ''new source,'' the term *new affected source*, as defined in §63.1420(a)(3), shall apply for the purposes of this subpart.

(9) When the HON process wastewater provisions in §63.132 (a) and (b) refer to the ''applicable dates specified in §63.100 of subpart F of this part,'' the applicable compliance dates specified in §63.1422 shall apply, for the purposes of this subpart.

(10) Whenever the HON process wastewater provisions in §§63.132 through 63.147 refer to a Group 1 wastewater stream or a Group 2 wastewater stream, the definitions of these terms contained in §63.1423 shall apply, for the purposes of this subpart.

(11) When the HON control requirements for certain liquid streams in open systems, in §63.149(d), refer to ''§63.100(f) of subpart F,'' the phrase ''§63.1420(c),'' shall apply for the purposes of this subpart. In addition, where §63.149(d) states ''and the item of equipment is not otherwise exempt from controls by the provisions of subparts A, F, G, or H of this part,'' the phrase ''and the item of equipment is not otherwise exempt from controls by the provisions of subparts A, F, G, H, or PPP of this part,'' shall apply for the purposes of this subpart.

(12) When the HON control requirements for certain liquid streams in open systems, in §63.149(e) (1) and (2), refer to ''a chemical manufacturing process unit subject to the new source requirements of 40 CFR 63.100(l) (1) or (2),'' the phrase ''a new affected source as described in §63.1420(a)(4),'' shall apply for the purposes of this subpart.

(13) When the HON Notification of Compliance Status requirements contained in §63.152(b) are referred to in the HON process wastewater provisions in §63.138 or §63.146, the Notification of Compliance Status requirements contained in §63.1439(e)(5) shall apply for the purposes of this subpart. In addition, when the HON process wastewater provisions in §63.138 or §63.146 require that information be reported according to §63.152(b) in the HON Notification of Compliance Status, owners or operators of affected sources shall report the specified information in the Notification of Compliance Status required by §63.1439(e)(5), for the purposes of this subpart.

(14) When the HON Periodic Report requirements contained in §63.152(c) are referred to in the HON process wastewater provisions in §63.146, the Periodic Report requirements contained in §63.1439(e)(6) shall apply for

the purposes of this subpart. In addition, when § 63.146 requires that information be reported in the HON Periodic Reports required in § 63.152(c), owners or operators of affected sources shall report the specified information in the Periodic Reports required in § 63.1439(e)(6), for the purposes of this subpart.

(15) When the term ''range'' is used in the HON requirements in §§ 63.132 through 63.149, the term ''level'' shall be used instead, for the purposes of this subpart. This level shall be determined using the procedures specified in parameter monitoring procedures in § 63.1438.

(16) When the HON process wastewater monitoring and inspection provisions in § 63.143(f) specify that the owner or operator shall establish the range that indicates proper operation of the treatment process or control technique, the owner or operator shall instead comply with the requirements § 63.1438 (c) or (d) for establishing parameter level maximums/minimums, for the purposes of this subpart.

(17) When the HON process wastewater provisions in § 63.146(b) (7) and (8) require that ''the information on parameter ranges specified in § 63.152(b)(2)'' be reported in the HON Notification of Compliance Status, owners and operators of affected sources are instead required to report the information on parameter levels in the Notification of Compliance Status as specified in § 63.1439(e)(5)(ii), for the purposes of this subpart.

(18) For the purposes of this subpart, the owner or operator is not required to comply with the HON process wastewater emission reduction provisions in § 63.138(g).

(19) When the provisions of HON process wastewater provisions in § 63.139(c)(1)(ii), § 63.145(d)(4), or § 63.145(i)(2) specify that Method 18, 40 CFR part 60, appendix A shall be used, Method 18 or Method 25A, 40 CFR part 60, appendix A may be used for the purposes of this subpart. The use of Method 25A, 40 CFR part 60, appendix A shall comply with paragraphs (a)(19) (i) and (ii) of this section.

(i) The organic HAP used as the calibration gas for Method 25A, 40 CFR part 60, appendix A shall be the single organic HAP representing the largest percent by volume of the emissions.

(ii) The use of Method 25A, 40 CFR part 60, appendix A is acceptable if the response from the high-level calibration gas is at least 20 times the standard deviation of the response from the zero calibration gas when the instrument is zeroed on the most sensitive scale.

(20) The owner or operator of a facility which receives a Group 1 wastewater stream, or a residual removed from a Group 1 wastewater stream, for treatment pursuant to the HON provisions in § 63.132(g) is subject to the requirements of § 63.132(g), with the differences identified in this section, and is not subject to the NESHAP from offsite waste and recovery operations in 40 CFR part 63, subpart DD, with respect to the received material.

(b) *Maintenance wastewater.* The owner or operator of each affected source shall comply with the HON maintenance wastewater requirements in § 63.105, with the exceptions noted in paragraphs (b) (1), (2), and (3) of this section.

(1) When the HON maintenance wastewater provisions in § 63.105(a) refer to ''organic HAPs listed in Table 9 of subpart G of this part,'' the owner or operator is only required to consider compounds that meet the definition of *organic HAP* in § 63.1423 and that are listed in Table 9 of 40 CFR part 63, subpart G, for the purposes of this subpart.

(2) When the term ''maintenance wastewater'' is used in the HON maintenance wastewater provisions in § 63.105, the definition of ''maintenance wastewater'' in § 63.1423 shall apply, for the purposes of this subpart.

(3) When the term ''wastewater'' is used in the HON maintenance wastewater provisions in § 63.105, the definition of ''wastewater'' in § 63.1423 shall apply, for the purposes of this subpart.

(c) *Compliance date.* The compliance date for the affected source subject to the provisions of this section is specified in § 63.1422.

[64 FR 29439, June 1, 1999, as amended at 65 FR 26501, May 8, 2000]

§ 63.1434 Equipment leak provisions.

(a) The owner or operator of each affected source shall comply with the

HON equipment leak requirements in 40 CFR part 63, subpart H for all equipment in organic HAP service, except as specified in paragraphs (b) through (g) of this section.

(b) The compliance date for the equipment leak provisions in this section is provided in § 63.1422(d).

(c) [Reserved]

(d) When the HON equipment leak Initial Notification requirements contained in § 63.182(a)(1) and § 63.182(b) are referred to in 40 CFR part 63, subpart H, the owner or operator shall comply with the Initial Notification requirements contained in § 63.1439(e)(3), for the purposes of this subpart. The Initial Notification shall be submitted no later than June 1, 2000 for existing sources, as stated in § 63.1439(e)(3)(ii)(A).

(e) The HON equipment leak Notification of Compliance Status required by § 63.182(a)(2) and § 63.182(c) shall be submitted within 150 days (rather than 90 days) of the applicable compliance date specified in § 63.1422 for the equipment leak provisions. The notification may be submitted as part of the Notification of Compliance Status required by § 63.1439(e)(5).

(f) The Periodic Reports required by § 63.182(a)(3) and § 63.182(d) may be submitted as part of the Periodic Reports required by § 63.1439(e)(6).

(g) If specific items of equipment, comprising part of a process unit subject to this subpart, are managed by different administrative organizations (e.g., different companies, affiliates, departments, divisions, etc.), those items of equipment may be aggregated with any PMPU within the affected source for all purposes under subpart H, providing there is no delay in achieving the applicable compliance date.

(h) The phrase ''the provisions of subparts F, I, or PPP of this part'' shall apply instead of the phrase ''the provisions of subparts F or I of this part,'' and instead of the phrase ''the provisions of subpart F or I of this part'' throughout §§ 63.163 and 63.168, for the purposes of this subpart. In addition, the phrase ''subparts F, I, and PPP'' shall apply instead of the phrase ''subparts F and I'' in § 63.174(c)(2)(iii), for the purposes of this subpart.

[64 FR 29439, June 1, 1999, as amended at 65 FR 26501, May 8, 2000]

§ 63.1435 Heat exchanger provisions.

(a) The owner or operator of each affected source shall comply with the requirements of § 63.104 for heat exchange systems, with the exceptions noted in paragraphs (b) through (e) of this section.

(b) When the term ''chemical manufacturing process unit'' is used in § 63.104, the term ''polyether polyols manufacturing process unit'' shall apply for the purposes of this subpart. Further, when the phrase ''a chemical manufacturing process unit meeting the conditions of § 63.100(b)(1) through (3) of this subpart, except for chemical manufacturing process units meeting the condition specified in § 63.100(c) of this subpart'' is used in § 63.104(a), the term ''PMPU, except for PMPU meeting the conditions specified in § 63.1420(b)'' shall apply for the purposes of this subpart.

(c) When the HON heat exchange system requirements in § 63.104(c)(3) specify the monitoring plan retention requirements, and when § 63.104(f)(1) refers to the record retention requirements in § 63.103(c)(1), the provisions of the general recordkeeping and reporting requirements in § 63.1439(a) and the applicable provisions of the General Provisions in 40 CFR part 63, subpart A, as specified in Table 1 of this subpart, shall apply for the purposes of this subpart.

(d) When the HON heat exchange system requirements in § 63.104(f)(2) require information to be reported in the Periodic Reports required by the HON general reporting provisions in § 63.152(c), the owner or operator shall instead report the information specified in § 63.104(f)(2) in the Periodic Reports required by the general reporting requirements in § 63.1439(e)(6), for the purposes of this subpart.

(e) When the HON heat exchange system requirements in § 63.104 refer to Table 4 of 40 CFR part 63, subpart F or Table 9 of 40 CFR part 63, subpart G, the owner or operator is only required to consider organic HAP listed in Table 4 of 40 CFR part 63, subpart F or 40 CFR

part 63, Table 9 of subpart G that are also listed on Table 4 of this subpart, for the purposes of this subpart.

[64 FR 29439, June 1, 1999, as amended at 65 FR 26501, May 8, 2000]

§ 63.1436 [Reserved]

§ 63.1437 Additional requirements for performance testing.

(a) Performance testing shall be conducted in accordance with § 63.7(a)(1), (a)(3), (d), (e)(1), (e)(2), (e)(4), (g), and (h), with the exceptions specified in paragraphs (a)(1) through (4) of this section and the additions specified in paragraph (b) of this section.

(1) Performance tests shall be conducted according to the general provisions' performance testing requirements in § 63.7(e)(1) and (2), except that for all emission sources except process vents from batch unit operations, performance tests shall be conducted during maximum representative operating conditions for the process achievable during one of the time periods described in paragraph (a)(1)(i) of this section, without causing any of the situations described in paragraph (a)(1)(ii) or (iii) of this section to occur. For process vents from batch unit operations, performance tests shall be conducted either at absolute worst-case conditions or hypothetical worst-case conditions, as defined in § 63.1426(c)(3)(i)(B), that are achievable during one of the time periods described in paragraph (a)(1)(i) of this section, without causing any of the situations described in paragraph (a)(1)(ii) or (iii) of this section to occur.

(i) The 6-month period that ends 2 months before the Notification of Compliance Status is due, according to § 63.1439(e)(5); or the 6-month period that begins 3 months before the performance test and ends 3 months after the performance test.

(ii) Causing damage to equipment; necessitating that the owner or operator make a product that does not meet an existing specification for sale to a customer; or necessitating that the owner or operator make a product in excess of demand.

(iii) Causing plant or testing personnel to be subject to unsafe conditions. Owners or operators that limit testing based on this paragraph shall maintain documentation that demonstrates the nature of the unsafe conditions and explains measures considered by the owner or operator to overcome these conditions. If requested, this documentation shall be provided to the Administrator.

(2) When the General Provisions' data analysis, recordkeeping, and reporting requirements in § 63.7(g) refer to the Notification of Compliance Status requirements in § 63.9(h), the Notification of Compliance Status requirements in § 63.1439(e)(5) shall instead apply, for the purposes of this subpart.

(3) Because the General Provisions' site-specific test plan in § 63.7(c)(3) is not required, the General Provisions' requirement for the Administrator to approve or deny site-specific test plans, in § 63.7(h)(4)(ii), is not applicable for the purposes of this subpart.

(4) The owner or operator of an affected source shall provide the Administrator at least 30 days prior notice of any performance test, except as specified under other subparts, to afford the Administrator the opportunity to have an observer present. If after 30 days notice for an initially scheduled performance test, there is a delay (due to operational problems, etc.) in conducting the scheduled performance test, the owner or operator of an affected source shall notify the Administrator (or delegated State or local agency) as soon as possible of any delay in the original test date, either by providing at least 7 days prior notice of the rescheduled test date of the performance test, or by arranging a rescheduled date with the Administrator (or delegated State or local agency) by mutual agreement.

(b) Data shall be reduced in accordance with the EPA approved methods specified in the applicable subpart or, if other test methods are used, the data and methods shall be validated according to the protocol in Method 301, 40 CFR part 63, appendix A.

(c) Notwithstanding any other provision of this subpart, if an owner or operator of an affected source uses a flare to comply with any of the requirements of this subpart, the owner or operator shall comply with paragraphs (c)(1) through (3) of this section. The owner or operator is not required to

conduct a performance test to determine percent emission reduction or outlet organic HAP or TOC concentration. If a compliance demonstration has been conducted previously for a flare, using the techniques specified in paragraphs (c)(1) through (3) of this section, that compliance demonstration may be used to satisfy the requirements of this paragraph if either no deliberate process changes have been made since the compliance demonstration, or the results of the compliance demonstration reliably demonstrate compliance despite process changes.

(1) Conduct a visible emission test using the techniques specified in § 63.11(b)(4) of the General Provisions;

(2) Determine the net heating value of the gas being combusted, using the techniques specified in § 63.11(b)(6) of the General Provisions; and

(3) Determine the exit velocity using the techniques specified in either § 63.11(b)(7)(i) (and § 63.11(b)(7)(iii), where applicable) or § 63.11(b)(8) of the General Provisions, as appropriate.

[64 FR 29439, June 1, 1999, as amended at 65 FR 26501, May 8, 2000]

§ 63.1438 Parameter monitoring levels and excursions.

(a) *Establishment of parameter monitoring levels.* The owner or operator of a combustion, recovery, or recapture device that has one or more parameter monitoring level requirements specified under this subpart shall establish a maximum or minimum level for each measured parameter. If a performance test is required by this subpart for a combustion, recovery, or recapture device, the owner or operator shall use the procedures in either paragraph (b) or (c) of this section to establish the parameter monitoring level(s). If a performance test is not required by this subpart for a combustion, recovery, or recapture device, the owner or operator may use the procedures in paragraph (b), (c), or (d) of this section to establish the parameter monitoring levels. When using the procedures specified in paragraph (c) or (d) of this section, the owner or operator shall submit the information specified in § 63.1439(e)(4)(viii) for review and approval, as part of the Precompliance Report.

(1) The owner or operator shall operate combustion, recovery, and recapture devices such that the daily average value of monitored parameters remains at or above the minimum established level, or remains at or below the maximum established level, except as otherwise provided in this subpart.

(2) As specified in § 63.1439(e)(5)(ii), all established levels, along with their supporting documentation and the definition of an operating day, shall be submitted as part of the Notification of Compliance Status.

(3) Nothing in this section shall be construed to allow a monitoring parameter excursion caused by an activity that violates other applicable provisions of 40 CFR part 63, subparts A, F, G, or H.

(b) *Establishment of parameter monitoring levels based exclusively on performance tests.* In cases where a performance test is required by this subpart, or the owner or operator of the affected source elects to do a performance test in accordance with the provisions of this subpart, and an owner or operator elects to establish a parameter monitoring level for a combustion, recovery, or recapture device based exclusively on parameter values measured during the performance test, the owner or operator of the affected source shall comply with the procedures in paragraph (b)(1) or (2) of this section, as applicable.

(1) *Process vents from continuous unit operations.* During initial compliance testing, the appropriate parameter shall be continuously monitored during the required 1-hour runs for process vents from continuous unit operations. The monitoring level(s) shall then be established as the average of the maximum (or minimum) point values from the three 1-hour test runs. The average of the maximum values shall be used when establishing a maximum level, and the average of the minimum values shall be used when establishing a minimum level.

(2) *Process vents from batch unit operations.* For process vents from batch unit operations, during initial compliance testing, the appropriate parameter shall be monitored continuously

during the entire test period. The monitoring level(s) shall be those established during from the compliance test.

(c) *Establishment of parameter monitoring levels based on performance tests, supplemented by engineering assessments and/or manufacturer's recommendations.* Parameter monitoring levels established under this paragraph shall be based on the parameter values measured during the performance test supplemented by engineering assessments and/or manufacturer's recommendations. Performance testing is not required to be conducted over the entire range of expected parameter values. The information specified in paragraphs (c)(1) and (2) of this section shall be provided in the Notification of Compliance Status.

(1) The specific level of the monitored parameter(s) for each emission point.

(2) The rationale for the specific level for each parameter for each emission point, including any data and calculations used to develop the level and a description of why the level indicates proper operation of the combustion, recovery, or recapture device.

(d) *Establishment of parameter monitoring based on engineering assessments and/or manufacturer's recommendations.* If a performance test is not required by this subpart for a combustion, recovery, or recapture device, the maximum or minimum level may be based solely on engineering assessments and/or manufacturers' recommendations. As required in paragraph (a)(2) of this section, the determined level and all supporting documentation shall be provided in the Notification of Compliance Status.

(e) *Monitoring violations.* (1) With the exception of excursions excused in accordance with paragraph (g) of this section, each excursion, as defined in paragraphs (f)(1)(i), (f)(2)(i)(A), (f)(2)(ii), (f)(3)(i), and (f)(4) of this section, constitutes a violation of the provisions of this subpart in accordance with paragraph (e)(1)(i), (ii), or (iii) of this section.

(i) For each condenser, each excursion constitutes a violation of the emission limit.

(ii) For each recovery or recapture device other than a condenser, where an organic monitoring device is used to monitor concentration, each excursion constitutes a violation of the emission limit.

(iii) For each combustion, recovery, or recapture device other than a condenser, each excursion constitutes a violation of the operating limit.

(2) With the exception of excursions excused in accordance with paragraph (g) of this section, each excursion, as defined in paragraphs (f)(1)(ii), (f)(1)(iii), (f)(2)(i)(B), and (f)(3)(ii) of this section constitutes a violation of the operating limit.

(f) *Parameter monitoring excursion definitions.* Parameter monitoring excursions are defined in paragraphs (f)(1) through (3) of this section.

(1) With respect to storage vessels (where the applicable monitoring plan specifies continuous monitoring), process vents from continuous unit operations using combustion, recovery, or recapture devices for purposes of compliance, and for process wastewater streams, an excursion means any of the three cases listed in paragraphs (f)(1)(i) through (iii) of this section.

(i) The daily average value of one or more monitored parameters is above the maximum level or below the minimum level established for the given parameters.

(ii) The period of combustion, recovery, or recapture device operation, with the exception noted in paragraph (f)(1)(v) of this section, is 4 hours or greater in an operating day and monitoring data are insufficient, as defined in paragraph (f)(1)(iv) of this section, to constitute a valid hour of data for at least 75 percent of the operating hours.

(iii) The period of combustion, recovery, or recapture device operation, with the exception noted in paragraph (f)(1)(v) of this section, is less than 4 hours in an operating day and more than 2 of the hours during the period of operation do not constitute a valid hour of data due to insufficient monitoring data, as defined in paragraph (f)(1)(iv) of this section.

(iv) Monitoring data are insufficient to constitute a valid hour of data, as used in paragraphs (f)(1)(ii) and (iii) of this section, if measured values are unavailable due to monitoring system breakdowns, repairs, calibrated checks,

or zero (low-level) and high level adjustments, for any of the 15-minute periods within the hour. For data compression systems approved under §63.1439(g)(3), monitoring data are insufficient to calculate a valid hour of data if there are less than four data measurements made during the hour.

(v) The periods listed in paragraphs (f)(1)(v)(A) through (D) of this section are not considered to be part of the period of combustion, recovery, or recapture device operation, for the purposes of paragraphs (f)(1)(ii) and (iii) of this section.

(A) Start-ups;

(B) Shutdowns;

(C) Malfunctions; or

(D) Periods of non-operation of the affected source (or portion thereof), resulting in cessation of the emissions to which the monitoring applies.

(2) For storage vessels where the applicable monitoring plan does not specify continuous monitoring, an excursion is defined in paragraph (f)(2)(i) or (ii) of this section, as applicable.

(i) If the monitoring plan specifies monitoring a parameter and recording its value at specific intervals (such as every 15 minutes or every hour), either of the cases listed in paragraph (f)(2)(i)(A) or (B) of this section is considered a single excursion for the combustion device.

(A) When the average value of one or more parameters, averaged over the time during which the storage vessel is being filled (i.e., when the liquid level in the storage vessel is being raised), is above the maximum level or below the minimum level established for the given parameters.

(B) When monitoring data are insufficient. Monitoring data shall be considered insufficient when measured values are not available, due to monitoring system breakdowns, repairs, calibration checks, or zero (low-level) and high-level adjustments, for at least 75 percent of the specific intervals at which parameters are to be monitored and recorded, according to the storage vessel's monitoring plan, during which the storage vessel is being filled.

(ii) If the monitoring plan does not specify monitoring a parameter and recording its value at specific intervals (for example, if the relevant operating requirement is to exchange a disposable carbon canister before expiration of its rated service life), the monitoring plan shall define an excursion in terms of the relevant operating requirement.

(3) With respect to process vents from batch unit operations, an excursion means one of the two cases listed in paragraphs (f)(3)(i) and (ii) of this section.

(i) When the daily average value of one or more monitored parameters is above the maximum or below the minimum established level for the given parameters.

(ii) When monitoring data are insufficient for an operating day. Monitoring data shall be considered insufficient when measured values are not available, due to monitoring system breakdowns, repairs, calibration checks, or zero (low-level) and high-level adjustments, for at least 75 percent of the 15-minute periods when batch emission episodes selected to be controlled are being vented to the control device during the operating day, using the procedures specified in paragraphs (f)(3)(ii)(A) through (D) of this section.

(A) Determine the total amount of time during the operating day when batch emission episodes selected to be controlled are being vented to the control device.

(B) Subtract the time during the periods listed in paragraphs (f)(3)(ii)(B)(*1*) through (*4*) of this section from the total amount of time determined above in paragraph (f)(3)(ii)(A) of this section, to obtain the operating time used to determine if monitoring data are insufficient.

(*1*) Start-ups;

(*2*) Shutdowns;

(*3*) Malfunctions; or

(*4*) Periods of non-operation of the affected source (or portion thereof), resulting in cessation of the emissions to which the monitoring applies.

(C) Determine the total number of 15-minute periods in the operating time used to determine if monitoring data are insufficient, as was determined in accordance with paragraph (f)(3)(ii)(B) of this section.

(D) If measured values are not available for at least 75 percent of the total

number of 15-minute periods determined in paragraph (f)(3)(ii)(C) of this section, the monitoring data are insufficient for the operating day.

(4) With respect to process vents using ECO to reduce epoxide emissions, an excursion means any of the situations described in § 63.1427(i)(3)(i) through (v). For each excursion, the owner or operator shall be deemed out of compliance with the provisions of this subpart, in accordance with paragraph (e) of this section, except as provided in paragraph (g) of this section.

(g) *Excused excursions.* A number of excused excursions shall be allowed for each combustion, recovery, or recapture device for each semiannual period. The number of excused excursions for each semiannual period is specified in paragraphs (g)(1) through (6) of this section. This paragraph applies to affected sources required to submit Periodic Reports semiannually or quarterly. The first semiannual period is the 6-month period starting the date the Notification of Compliance Status is due.

(1) For the first semiannual period—six excused excursions.

(2) For the second semiannual period—five excused excursions.

(3) For the third semiannual period—four excused excursions.

(4) For the fourth semiannual period—three excused excursions.

(5) For the fifth semiannual period—two excused excursions.

(6) For the sixth and all subsequent semiannual periods—one excused excursion.

§ 63.1439 General recordkeeping and reporting provisions.

(a) *Data retention.* Unless otherwise specified in this subpart, the owner or operator of an affected source shall keep copies of all applicable records and reports required by this subpart for at least 5 years. All applicable records shall be maintained in such a manner that they can be readily accessed. The most recent 6 months of records shall be retained on site or shall be accessible from a central location by computer or other means that provide access within 2 hours after a request. The remaining 4 and one-half years of records may be retained offsite. Records may be maintained in hard copy or computer-readable form including, but not limited to, on microfilm, computer, floppy disk, magnetic tape, or microfiche. If an owner or operator submits copies of reports to the applicable EPA Regional Office, the owner or operator is not required to maintain copies of reports. If the EPA Regional Office has waived the requirement of § 63.10(a)(4)(ii) for submittal of copies of reports, the owner or operator is not required to maintain copies of reports.

(b) *Subpart A requirements.* The owner or operator of an affected source shall comply with the applicable recordkeeping and reporting requirements in 40 CFR part 63, subpart A (the General Provisions) as specified in Table 1 of this subpart. These requirements include, but are not limited to, the requirements specified in paragraphs (b)(1) and (2) of this section.

(1) *Start-up, shutdown, and malfunction plan.* The owner or operator of an affected source shall develop and implement a written start-up, shutdown, and malfunction plan as specified in the General Provisions' requirements for a Startup, Shutdown, and Malfunction Plan in § 63.6(e)(3). This plan shall describe, in detail, procedures for operating and maintaining the affected source during periods of start-up, shutdown, and malfunction and a program for corrective action for malfunctioning process and air pollution control equipment used to comply with this subpart. A provision for ceasing to collect, during a start-up, shutdown, or malfunction, monitoring data that would otherwise be required by the provisions of this subpart may be included in the start-up, shutdown, and malfunction plan only if the owner or operator has demonstrated to the Administrator, through the Precompliance Report or a supplement to the Precompliance Report, that the monitoring system would be damaged or destroyed if it were not shut down during the start-up, shutdown, or malfunction. The owner or operator of the affected source shall keep the start-up, shutdown, and malfunction plan on site. In addition, if the start-up, shutdown, and malfunction plan is revised,

the owner or operator shall keep previous (i.e., superseded) versions of the start-up, shutdown, and malfunction plan for a period of 5 years after each revision to the plan. If the new version of the start-up, shutdown, and malfunction plan includes a provision for ceasing to collect, during a start-up, shutdown, or malfunction, monitoring data that would otherwise be required, the owner or operator shall submit a supplement to the Precompliance Report to the Administrator for the Administrator's approval, documenting that the monitoring system would be damaged or destroyed if it were not shut down during the start-up, shutdown, or malfunction. Records associated with the plan shall be kept as specified in paragraphs (b)(1)(i)(A) and (B) of this section. Reports related to the plan shall be submitted as specified in paragraph (b)(1)(ii) of this section.

(i) The owner or operator shall keep the records specified in paragraphs (b)(1)(i)(A) and (B) of this section.

(A) Records of the occurrence and duration of each start-up, shutdown, and malfunction of operation of process equipment or combustion, recovery, or recapture devices or continuous monitoring systems used to comply with this subpart during which excess emissions (as defined in §63.1420(h)(4)) occur.

(B) For each start-up, shutdown, or malfunction during which excess emissions (as defined in §63.1420(h)(4)) occur, records reflecting whether the procedures specified in the affected source's start-up, shutdown, and malfunction plan were followed, and documentation of actions taken that are not consistent with the plan. For example, if a start-up, shutdown, and malfunction plan includes procedures for routing a combustion, recovery, or recapture device to a backup combustion, recovery, or recapture device, records shall be kept of whether the plan was followed. These records may take the form of a ''checklist,'' or other form of recordkeeping that confirms conformance with the start-up, shutdown, and malfunction plan for the event.

(ii) *Reports of start-up, shutdown, and malfunction.* For the purposes of this subpart, the semiannual start-up, shutdown, and malfunction reports shall be submitted on the same schedule as the Periodic Reports required under paragraph (e)(6) of this section instead of according to the general provisions' Periodic Reporting schedule specified in §63.10(d)(5)(i). The reports shall include the information specified in §63.10(d)(5)(i).

(2) *Application for approval of construction or reconstruction.* For new affected sources, the owner or operator shall comply with the General Provisions' requirements for the application for approval of construction or reconstruction, as specified in §63.5, excluding the provisions specified in §63.5(d)(1)(ii)(H), (d)(1)(iii), (d)(2), and (d)(3)(ii).

(c) *Subpart H requirements.* The owner or operator of an affected source shall comply with the HON equipment leak reporting and recordkeeping requirements in 40 CFR part 63, subpart H, except as specified in §63.1434(b) through (g).

(d) *Recordkeeping and documentation.* The owner or operator required to keep continuous records shall keep records as specified in paragraphs (d)(1) through (7) of this section, unless an alternative recordkeeping system has been requested and approved as specified in paragraph (g) of this section, and except as provided in paragraph (h) of this section. If a monitoring plan for storage vessels pursuant to §63.1432(i) requires continuous records, the monitoring plan shall specify which provisions, if any, of paragraphs (d)(1) through (7) of this section apply. As described in §63.1432(i), certain storage vessels are not required to keep continuous records as specified in this paragraph. The owner or operator of such storage vessels shall keep records as specified in the monitoring plan required by §63.1432(i).

(1) The monitoring system shall measure data values at least once during approximately equal 15-minute intervals.

(2) The owner or operator shall record either each measured data value or block average values for 1 hour or shorter periods calculated from all measured data values during each period. If values are measured more frequently than once per minute, a single

value for each minute may be used to calculate the hourly (or shorter period) block average instead of all measured values. The owner or operator of process vents from batch unit operations shall record each measured data value.

(3) Daily average values of each continuously monitored parameter shall be calculated for each operating day as specified in paragraphs (d)(3)(i) through (ii) of this section, except as specified in paragraphs (d)(6) and (7) of this section.

(i) The daily average value shall be calculated as the average of all parameter values recorded during the operating day, except as specified in paragraph (d)(7) of this section. The calculated average shall cover a 24-hour period if operation is continuous. If intermittent emissions episodes occur resulting in emissions being vented to a combustion, recapture, or recovery device for a period of less than 24 hours in the operating day, the daily average shall be calculated based only on the period when emissions are being vented to the combustion, recapture, or recovery device. For example, if a batch unit operation operates such that emissions are vented to a combustion device for 6 hours, then the daily average is the average of the temperature measurements taken during those 6 hours.

(ii) The operating day shall be the 24-hour period that the owner or operator specifies in the operating permit or the Notification of Compliance Status, for purposes of determining daily average values.

(4)–(5) [Reserved]

(6) If all recorded values for a monitored parameter during an operating day are above the minimum level or below the maximum level established in the Notification of Compliance Status or operating permit, the owner or operator may record that all values were above the minimum level or below the maximum level rather than calculating and recording a daily average for that operating day.

(7) Monitoring data recorded during periods identified in paragraphs (d)(7)(i) through (v) of this section shall not be included in any average computed under this subpart. Records shall be kept of the times and durations of all such periods and any other periods during process or combustion, recovery, or recapture device operation when monitors are not operating.

(i) Monitoring system breakdowns, repairs, calibration checks, and zero (low-level) and high-level adjustments;

(ii) Start-ups;

(iii) Shutdowns;

(iv) Malfunctions; or

(v) Periods of non-operation of the affected source (or portion thereof), resulting in cessation of the emissions to which the monitoring applies.

(8) For continuous monitoring systems used to comply with this subpart, records documenting the completion of calibration checks, and records documenting the maintenance of continuous monitoring systems that are specified in the manufacturer's instructions or that are specified in other written procedures that provide adequate assurance that the equipment would reasonably be expected to monitor accurately.

(9) The owner or operator of an affected source granted a waiver of recordkeeping or reporting requirements under the General Provisions' recordkeeping and reporting requirements in § 63.10(f) shall maintain the information, if any, specified by the Administrator as a condition of the waiver of recordkeeping or reporting requirements.

(e) *Reporting and notification.* In addition to the reports and notifications required by 40 CFR part 63, subpart A, as specified in this subpart, the owner or operator of an affected source shall prepare and submit the reports listed in paragraphs (e)(3) through (8) of this section, as applicable. All reports required by this subpart, and the schedule for their submittal, are listed in Table 8 of this subpart.

(1) *Violation of reporting requirements.* Owners and operators shall not be in violation of the reporting requirements of this paragraph (e) for failing to submit information required to be included in a specified report if the owner or operator meets the requirements in paragraphs (e)(1)(i) through (iii) of this section. Examples of circumstances where this paragraph may apply include information related to newly-added equipment or emission points, changes in the process, changes in

equipment required or utilized for compliance with the requirements of this subpart, or changes in methods or equipment for monitoring, recordkeeping, or reporting.

(i) The information was not known in time for inclusion in the report specified by this subpart.

(ii) The owner or operator has been diligent in obtaining the information.

(iii) The owner or operator submits a report according to the provisions of paragraphs (e)(1)(iii)(A) through (C) of this section.

(A) If this subpart expressly provides for supplements to the report in which the information is required, the owner or operator shall submit the information as a supplement to that report. The information shall be submitted no later than 60 days after it is obtained, unless otherwise specified in this subpart.

(B) If this subpart does not expressly provide for supplements, but the owner or operator must submit a request for revision of an operating permit pursuant to the State operating permit programs in part 70 or the Federal operating permit programs in part 71, due to circumstances to which the information pertains, the owner or operator shall submit the information with the request for revision to the operating permit.

(C) In any case not addressed by paragraph (e)(1)(iii)(A) or (B) of this section, the owner or operator shall submit the information with the first Periodic Report, as required by this subpart, which has a submission deadline at least 60 days after the information is obtained.

(2) *Submittal of reports.* All reports required under this subpart shall be sent to the Administrator at the applicable address listed in the General Provisions' list of addresses of State air pollution control agencies and EPA Regional Offices, in §63.13. If acceptable to both the Administrator and the owner or operator of a source, reports may be submitted on electronic media.

(3) *Initial Notification.* The owner or operator of a new affected source shall submit a written Initial Notification to the Administrator containing the information described in paragraph (e)(3)(i) of this section according to the schedule in paragraph (e)(3)(ii) of this section. The General Provisions' Initial Notification requirements in §63.9(b)(2), (3), and (6) shall not apply for the purposes of this subpart.

(i) The Initial Notification shall include the following information:

(A) The name and address of the owner or operator;

(B) The address (physical location) of the affected source;

(C) An identification of the kinds of emission points within the affected source;

(D) An identification of the relevant standard, or other requirement, that is the basis of the notification and the source's compliance date; and

(E) A statement of whether or not the affected source is a major source.

(ii) The Initial Notification shall be submitted according to the schedule in paragraph (e)(3)(ii)(A), (B), or (C) of this section, as applicable.

(A) [Reserved]

(B) For a new source that has an initial start-up on or after August 30, 1999, the application for approval of construction or reconstruction required by the General Provisions in §63.5(d) shall be submitted in lieu of the Initial Notification. The application shall be submitted as soon as practical before construction or reconstruction is planned to commence (but it need not be sooner than August 30, 1999).

(C) For a new source that has an initial start-up prior to August 30, 1999, the Initial Notification shall be submitted no later than August 30, 1999. The application for approval of construction or reconstruction described in the General Provisions' requirements in §63.5(d) is not required for these sources.

(4) *Precompliance Report.* The owner or operator of an affected source requesting an extension for compliance; requesting approval to use alternative monitoring parameters, alternative continuous monitoring and recordkeeping, or alternative controls; requesting approval to incorporate a provision for ceasing to collect monitoring data, during a start-up, shutdown, or malfunction, into the start-up, shutdown, and malfunction plan, when that

monitoring equipment would be damaged if it did not cease to collect monitoring data, as permitted under § 63.1420(h)(3); or requesting approval to establish parameter monitoring levels according to the procedures contained in § 63.1438(c) or (d) shall submit a Precompliance Report according to the schedule described in paragraph (e)(4)(i) of this section. The Precompliance Report shall contain the information specified in paragraphs (e)(4)(ii) through (viii) of this section, as appropriate.

(i) The Precompliance Report shall be submitted to the Administrator no later than 12 months prior to the compliance date. Unless the Administrator objects to a request submitted in the Precompliance Report within 45 days after its receipt, the request shall be deemed approved. For new affected sources, the Precompliance Report shall be submitted to the Administrator with the application for approval of construction or reconstruction required in paragraph (b)(2) of this section. Supplements to the Precompliance Report may be submitted as specified in paragraph (e)(4)(vii) of this section.

(ii) A request for an extension for compliance, as specified in § 63.1422(e), may be submitted in the Precompliance Report. The request for a compliance extension shall include the data outlined in the General Provisions' compliance requirements in § 63.6(i)(6)(i)(A), (B), and (D), as required in § 63.1422(e)(1).

(iii) The alternative monitoring parameter information required in paragraph (f) of this section shall be submitted in the Precompliance Report if, for any emission point, the owner or operator of an affected source seeks to comply through the use of a control technique other than those for which monitoring parameters are specified in this subpart or in 40 CFR part 63, subpart G, or seeks to comply by monitoring a different parameter than those specified in this subpart or in 40 CFR part 63, subpart G.

(iv) If the affected source seeks to comply using alternative continuous monitoring and recordkeeping as specified in paragraph (g) of this section, the owner or operator shall submit a request for approval in the Precompliance Report.

(v) The owner or operator shall report the intent to use alternative controls to comply with the provisions of this subpart in the Precompliance Report. The Administrator may deem alternative controls to be equivalent to the controls required by the standard, under the procedures outlined in the General Provisions' requirements for use of an alternative nonopacity emission standard, in § 63.6(g).

(vi) If the owner or operator is requesting approval to incorporate a provision for ceasing to collect monitoring data, during a start-up, shutdown, or malfunction, into the start-up, shutdown, and malfunction plan, when that monitoring equipment would be damaged if it did not cease to collect monitoring data, the information specified in paragraphs (e)(4)(vi)(A) and (B) of this section shall be supplied in the Precompliance Report or in a supplement to the Precompliance Report. The Administrator shall evaluate the supporting documentation and shall approve the request only if, in the Administrator's judgment, the specific monitoring equipment would be damaged by the contemporaneous start-up, shutdown, or malfunction.

(A) Documentation supporting a claim that the monitoring equipment would be damaged by the contemporaneous start-up, shutdown, or malfunction; and

(B) A request to incorporate such a provision for ceasing to collect monitoring data during a start-up, shutdown, or malfunction, into the start-up, shutdown, and malfunction plan.

(vii) Supplements to the Precompliance Report may be submitted as specified in paragraph (e)(4)(vii)(A) of this section, or as specified in paragraph (e)(4)(vii)(B) of this section. Unless the Administrator objects to a request submitted in a supplement to the Precompliance Report within 45 days after its receipt, the request shall be deemed approved.

(A) Supplements to the Precompliance Report may be submitted to clarify or modify information previously submitted.

(B) Supplements to the Precompliance Report may be submitted to request approval to use alternative monitoring parameters, as specified in paragraph (e)(4)(iii) of this section; to use alternative continuous monitoring and recordkeeping, as specified in paragraph (e)(4)(iv) of this section; to use alternative controls, as specified in paragraph (e)(4)(v) of this section; or to include a provision for ceasing to collect monitoring data during a start-up, shutdown, or malfunction, in the start-up, shutdown, and malfunction plan, when that monitoring equipment would be damaged if it did not cease to collect monitoring data, as specified in paragraph (e)(4)(vi) of this section.

(viii) If an owner or operator establishes parameter monitoring levels according to the procedures contained in the parameter monitoring provisions in §63.1438(c) or (d), the following information shall be submitted in the Precompliance Report:

(A) Identification of which procedures (i.e., §63.1438(c) or (d)) are to be used; and

(B) A description of how the parameter monitoring level is to be established. If the procedures in §63.1438(c) are to be used, a description of how performance test data will be used shall be included.

(5) *Notification of Compliance Status.* For existing and new affected sources, a Notification of Compliance Status shall be submitted within 150 days after the compliance dates specified in §63.1422. For equipment leaks subject to §63.1434, the owner or operator shall submit the information specified in the HON equipment leak Notification of Compliance Status requirements in §63.182(c), in the Notification of Compliance Status required by this paragraph. For all other emission points, including heat exchange systems, the Notification of Compliance Status shall contain the information listed in paragraphs (e)(5)(i) through (vii) of this section.

(i) The results of any emission point group determinations, process section applicability determinations, performance tests, inspections, continuous monitoring system performance evaluations, any other information required by the test method to be in the test report used to demonstrate compliance, values of monitored parameters established during performance tests, and any other information required to be included in a Notification of Compliance Status under the requirements for overlapping regulations in §63.1422(j), the HON storage vessel reporting provisions in §63.122 and the storage vessel provisions in §63.1432, and the HON process wastewater reporting provisions in §63.146. In addition, the owner or operator shall comply with paragraphs (e)(5)(i)(A) and (B) of this section.

(A) For performance tests, group determinations, or determination that controls are needed, the Notification of Compliance Status shall include one complete test report, as described in paragraph (e)(5)(i)(B) of this section, for each test method used for a particular kind of emission point. For additional tests performed for the same kind of emission point using the same method, the results and any other information required by the test method to be in the test report shall be submitted, but a complete test report is not required.

(B) A complete test report shall include a brief process description, sampling site description, description of sampling and analysis procedures and any modifications to standard procedures, quality assurance procedures, record of operating conditions during the test, record of preparation of standards (if the owner or operator prepares the standards), record of calibrations, raw data sheets for field sampling, raw data sheets for field and laboratory analyses, documentation of calculations, and any other information required by the test method to be in the test report.

(ii) For each monitored parameter for which a maximum or minimum level is required to be established under the HON process vent monitoring requirements in §63.114(e) and the process vent monitoring requirements in §63.1429(d), the HON process wastewater parameter monitoring requirements in §63.143(f), paragraph (e)(8) of this section, or paragraph (f) of this section, the information specified in paragraphs (e)(5)(ii)(A) through (C)

of this section shall be submitted. Further, as described in the storage vessel provisions in § 63.1432(k), for those storage vessels for which the parameter monitoring plan (required to be submitted under the HON Notification of Compliance Status requirements for storage vessels in § 63.120(d)(3)) specifies compliance with the parameter monitoring provisions of § 63.1438, the owner or operator shall provide the information specified in paragraphs (e)(5)(ii)(A) through (C) of this section for each monitoring parameter. For those storage vessels for which the parameter monitoring plan required to be submitted under the HON Notification of Compliance Status requirements for storage vessels in § 63.120(d)(2) does not require compliance with the provisions of § 63.1438, the owner or operator shall provide the information specified in § 63.120(d)(3) as part of the Notification of Compliance Status.

(A) The required information shall include the specific maximum or minimum level of the monitored parameter(s) for each emission point.

(B) The required information shall include the rationale for the specific maximum or minimum level for each parameter for each emission point, including any data and calculations used to develop the level and a description of why the level indicates that the combustion, recovery, or recapture device is operated in a manner to ensure compliance with the provisions of this subpart.

(C) The required information shall include a definition of the affected source's operating day, as specified in paragraph (d)(3)(ii) of this section, for purposes of determining daily average values of monitored parameters.

(iii) The determination of applicability for flexible operation units as specified in § 63.1420(e)(1)(iii).

(iv) The parameter monitoring levels for flexible operation units, and the basis on which these levels were selected, or a demonstration that these levels are appropriate at all times, as specified in § 63.1420(e)(5)(ii)(A).

(v) The results for each predominant use determination made under § 63.1420(f)(1) through (7), for storage vessels assigned to an affected source subject to this subpart.

(vi) If any emission point is subject to this subpart and to other standards as specified in § 63.1422(j), and if the provisions of § 63.1422(j) allow the owner or operator to choose which testing, monitoring, reporting, and recordkeeping provisions will be followed, then the Notification of Compliance Status shall indicate which rule's requirements will be followed for testing, monitoring, reporting, and recordkeeping.

(vii) An owner or operator who transfers a Group 1 wastewater stream or residual removed from a Group 1 wastewater stream for treatment pursuant to § 63.132(g) shall include in the Notification of Compliance Status the name and location of the transferee and a description of the Group 1 wastewater stream or residual sent to the treatment facility.

(6) *Periodic Reports.* For existing and new affected sources, the owner or operator shall submit Periodic Reports as specified in paragraphs (e)(6)(i) through (viii) of this section. In addition, for equipment leaks subject to § 63.1434, the owner or operator shall submit the information specified in the HON periodic reporting requirements in § 63.182(d), and for heat exchange systems subject to § 63.1434, the owner or operator shall submit the information specified in the HON heat exchange system reporting requirements in § 63.104(f)(2), as part of the Periodic Report required by this paragraph (e)(6).

(i) Except as specified in paragraphs (e)(6)(viii) of this section, a report containing the information in paragraph (e)(6)(ii) of this section or paragraphs (e)(6)(iii) through (vii) of this section, as appropriate, shall be submitted semiannually no later than 60 days after the end of each 180-day period. The first report shall be submitted no later than 240 days after the date the Notification of Compliance Status is due and shall cover the 6-month period beginning on the date the Notification of Compliance Status is due. Subsequent reports shall cover each preceding 6-month period.

(ii) If none of the compliance exceptions in paragraphs (e)(6)(iii) through (vii) of this section occurred during the

6-month period, the Periodic Report required by paragraph (e)(6)(i) of this section shall be a statement that there were no compliance exceptions, as described in this paragraph, for the 6-month period covered by that report and that none of the activities specified in paragraphs (e)(6)(iii) through (vii) of this section occurred during the period covered by that report.

(iii) For an owner or operator of an affected source complying with the provisions of §§63.1432 through 63.1433 for any emission point, Periodic Reports shall include:

(A) All information specified in the HON periodic reporting requirements in §63.122(a)(4) for storage vessels and in §63.146(c) through §63.146(f) for process wastewater.

(B) The daily average values of monitored parameters for all excursions, as defined in §63.1438(f).

(C) The periods when monitoring data were not collected shall be specified; and

(D) The information in paragraphs (e)(6)(iii)(D)(*1*) through (*3*) of this section, as applicable:

(*1*) Notification if a process change is made such that the group status of any emission point changes from Group 2 to Group 1. The owner or operator is not required to submit a notification of a process change if that process change caused the group status of an emission point to change from Group 1 to Group 2. However, until the owner or operator notifies the Administrator that the group status of an emission point has changed from Group 1 to Group 2, the owner or operator is required to continue to comply with the Group 1 requirements for that emission point. This notification may be submitted at any time.

(*2*) Notification if one or more emission points (other than equipment leak components subject to §63.1434), or one or more PMPU is added to an affected source. The owner or operator shall submit the information contained in paragraphs (e)(6)(iii)(D)(*2*)(i) and (*ii*) of this section.

(*i*) A description of the addition to the affected source.

(*ii*) Notification of the group status or control requirement for the additional emission point or all emission points in the PMPU.

(*3*) For process wastewater streams sent for treatment pursuant to §63.132(g), reports of changes in the identity of the treatment facility or transferee.

(E) The information in paragraph (b)(1)(ii) of this section for reports of start-up, shutdown, and malfunction.

(iv) If any performance tests are reported in a Periodic Report, the following information shall be included:

(A) One complete test report shall be submitted for each test method used for a particular kind of emission point tested. A complete test report shall contain the information specified in paragraph (e)(5)(i)(B) of this section.

(B) For additional tests performed for the same kind of emission point using the same method, results and any other information required by the test method to be in the test report shall be submitted, but a complete test report is not required.

(v) The results for each change made to a primary product determination for a PMPU made under §63.1420(e)(3) or (10).

(vi) The results for each reevaluation of the applicability of this subpart to a storage vessel that begins receiving material from (or sending material to) a process unit that was not included in the initial determination, or a storage vessel that ceases to receive material from (or send material to) a process unit that was included in the initial determination, in accordance with §63.1420(f)(8).

(vii) The Periodic Report required by the equipment leak provisions in §63.1434(f) shall be submitted as part of the Periodic Report required by paragraph (e)(6) of this section.

(viii) The owner or operator of an affected source shall submit quarterly reports for particular emission points and process sections as specified in paragraphs (e)(6)(viii)(A) through (D) of this section.

(A) The owner or operator of an affected source shall submit quarterly reports for a period of 1 year for an emission point or process section if the emission point or process section meets the conditions in paragraph (e)(6)(viii)(A)(*1*) or (*2*) of this section.

(*1*) A combustion, recovery, or recapture device for a particular emission point or process section has more excursions, as defined in § 63.1438(f), than the number of excused excursions allowed under § 63.1438(g) for a semiannual reporting period; or

(*2*) The Administrator requests the owner or operator to submit quarterly reports for that emission point or process section.

(B) The quarterly reports shall include all information specified in paragraphs (e)(6)(iii) through (vii) of this section, as applicable to the emission point or process section for which quarterly reporting is required under paragraph (e)(6)(viii)(A) of this section. Information applicable to other emission points within the affected source shall be submitted in the semiannual reports required under paragraph (e)(6)(i) of this section.

(C) Quarterly reports shall be submitted no later than 60 days after the end of each quarter.

(D) After quarterly reports have been submitted for an emission point for 1 year without more excursions occurring (during that year) than the number of excused excursions allowed under § 63.1438(g), the owner or operator may return to semiannual reporting for the emission point or process section.

(7) *Other reports.* Other reports shall be submitted as specified in paragraphs (e)(7)(i) through (iii) of this section.

(i) For storage vessels, the notifications of inspections required by § 63.1432 shall be submitted, as specified in the HON storage vessel provisions in § 63.122(h)(1) and (2).

(ii) When the conditions at § 63.1420(e)(3)(iii), (e)(9), or (e)(10) are met, reports of changes to the primary product for a PMPU or process unit, as required by § 63.1420(e)(3)(iii), (e)(9), or (e)(10)(iii), respectively, shall be submitted.

(iii) Owners or operators of PMPU or emission points (other than equipment leak components subject to § 63.1434) that are subject to provisions for changes or additions to plant sites in § 63.1420(g)(1) or (2) shall submit a report as specified in paragraphs (e)(7)(iii)(A) and (B) of this section.

(A) Reports shall include:

(*1*) A description of the process change or addition, as appropriate;

(*2*) The planned start-up date and the appropriate compliance date, according to § 63.1420(g)(1) or (2); and

(*3*) Identification of the group status of emission points (except equipment leak components subject to the requirements in § 63.1434) specified in paragraphs (e)(7)(iii)(A)(*3*)(*i*) through (*iii*) of this section, as applicable.

(*i*) All the emission points in the added PMPU, as described in § 63.1420(g)(1).

(*ii*) All the emission points in an affected source designated as a new affected source under § 63.1420(g)(2)(i).

(*iii*) All the added or created emission points as described in § 63.1420(g)(2)(ii) or (iii).

(*4*) If the owner or operator wishes to request approval to use alternative monitoring parameters, alternative continuous monitoring or recordkeeping, alternative controls, or wishes to establish parameter monitoring levels according to the procedures contained in § 63.1438(c) or (d), a Precompliance Report shall be submitted in accordance with paragraph (e)(7)(iii)(B) of this section.

(B) Reports shall be submitted as specified in paragraphs (e)(7)(iii)(B)(*1*) through (*3*) of this section, as appropriate.

(*1*) Owners or operators of an added PMPU subject to § 63.1420(g)(1) shall submit a report no later than 180 days prior to the compliance date for the PMPU.

(*2*) Owners or operators of an affected source designated as a new affected source under § 63.1420(g)(2)(i) shall submit a report no later than 180 days prior to the compliance date for the affected source.

(*3*) Owners and operators of any emission point (other than equipment leak components subject to § 63.1434) subject to § 63.1420(g)(2)(ii) or (iii) shall submit a report no later than 180 days prior to the compliance date for those emission points.

(8) *Operating permit application.* An owner or operator who submits an operating permit application instead of a Precompliance Report shall submit the information specified in paragraph

(e)(4) of this section, as applicable, with the operating permit application.

(f) *Alternative monitoring parameters.* The owner or operator who has been directed by any section of this subpart, or any section of another subpart referenced by this subpart, that specifically references this paragraph to set unique monitoring parameters, or who requests approval to monitor a different parameter than those listed in §63.1432 for storage vessels, §63.1427 for ECO, §63.1429 for process vents, or §63.143 for process wastewater shall submit the information specified in paragraphs (f)(1) through (3) of this section in the Precompliance Report, as required by paragraph (e)(4) of this section. The owner or operator shall retain for a period of 5 years each record required by paragraphs (f)(1) through (3) of this section.

(1) The required information shall include a description of the parameter(s) to be monitored to ensure the combustion, recovery, or recapture device; control technique; or pollution prevention measure is operated in conformance with its design and achieves the specified emission limit, percent reduction, or nominal efficiency, and an explanation of the criteria used to select the parameter(s).

(2) The required information shall include a description of the methods and procedures that will be used to demonstrate that the parameter indicates proper operation, the schedule for this demonstration, and a statement that the owner or operator will establish a level for the monitored parameter as part of the Notification of Compliance Status report required in paragraph (e)(5) of this section, unless this information has already been included in the operating permit application.

(3) The required information shall include a description of the proposed monitoring, recordkeeping, and reporting system, to include the frequency and content of monitoring, recordkeeping, and reporting. Further, the rationale for the proposed monitoring, recordkeeping, and reporting system shall be included if either condition in paragraph (f)(3)(i) or (ii) of this section is met:

(i) If monitoring and recordkeeping is not continuous; or

(ii) If reports of daily average values will not be included in Periodic Reports when the monitored parameter value is above the maximum level or below the minimum level as established in the operating permit or the Notification of Compliance Status.

(g) *Alternative continuous monitoring and recordkeeping.* An owner or operator choosing not to implement the continuous parameter operating and recordkeeping provisions listed in §63.1429 for process vents, and §63.1433 for wastewater, may instead request approval to use alternative continuous monitoring and recordkeeping provisions according to the procedures specified in paragraphs (g)(1) through (4) of this section. Requests shall be submitted in the Precompliance Report as specified in paragraph (e)(4)(iv) of this section, and shall contain the information specified in paragraphs (g)(2)(ii) and (g)(3)(ii) of this section, as applicable.

(1) The provisions in the General Provisions requirements for the use of an alternative monitoring method in §63.8(f)(5)(i) shall govern the review and approval of requests.

(2) An owner or operator of an affected source that does not have an automated monitoring and recording system capable of measuring parameter values at least once during approximately equal 15-minute intervals and that does not generate continuous records may request approval to use a nonautomated system with less frequent monitoring, in accordance with paragraphs (g)(2)(i) and (ii) of this section.

(i) The requested system shall include visual reading and recording of the value of the relevant operating parameter no less frequently than once per hour. Daily averages shall be calculated from these hourly values and recorded.

(ii) The request shall contain:

(A) A description of the planned monitoring and recordkeeping system;

(B) Documentation that the affected source does not have an automated monitoring and recording system;

(C) Justification for requesting an alternative monitoring and recordkeeping system; and

(D) Demonstration that the proposed monitoring frequency is sufficient to represent combustion, recovery, or recapture device operating conditions, considering typical variability of the specific process and combustion, recovery, or recapture device operating parameter being monitored.

(3) An owner or operator may request approval to use an automated data compression recording system that does not record monitored operating parameter values at a set frequency (for example, once at approximately equal intervals of about 15 minutes), but that records all values that meet set criteria for variation from previously recorded values, in accordance with paragraphs (g)(3)(i) and (ii) of this section.

(i) The requested system shall be designed to:

(A) Measure the operating parameter value at least once during approximately equal 15-minute intervals;

(B) Record at least four values each hour during periods of operation;

(C) Record the date and time when monitors are turned off or on;

(D) Recognize unchanging data that may indicate the monitor is not functioning properly, alert the operator, and record the incident;

(E) Calculate daily average values of the monitored operating parameter based on all measured data; and

(F) If the daily average is not an excursion, as defined in § 63.1438(f), the data for that operating day may be converted to hourly average values and the four or more individual records for each hour in the operating day may be discarded.

(ii) The request shall contain:

(A) A description of the monitoring system and data compression recording system, including the criteria used to determine which monitored values are recorded and retained;

(B) The method for calculating daily averages; and

(C) A demonstration that the system meets all criteria in paragraph (g)(3)(i) of this section.

(4) An owner or operator may request approval to use other alternative monitoring systems according to the procedures specified in the General Provisions' requirements for using an alternative monitoring method in § 63.8(f)(4).

(h) *Reduced recordkeeping program.* For any parameter with respect to any item of equipment, the owner or operator may implement the recordkeeping requirements in paragraph (h)(1) or (2) of this section as alternatives to the continuous operating parameter monitoring and recordkeeping provisions that would otherwise apply under this subpart. The owner or operator shall retain for a period of 5 years each record required by paragraph (h)(1) or (2) of this section.

(1) The owner or operator may retain only the daily average value, and is not required to retain more frequent monitored operating parameter values, for a monitored parameter with respect to an item of equipment, if the requirements of paragraphs (h)(1)(i) through (iv) of this section are met. An owner or operator electing to comply with the requirements of paragraph (h)(1) of this section shall notify the Administrator in the Notification of Compliance Status or, if the Notification of Compliance Status has already been submitted, in the Periodic Report immediately preceding implementation of the requirements of paragraph (h)(1) of this section.

(i) The monitoring system is capable of detecting unrealistic or impossible data during periods of operation other than start-ups, shutdowns or malfunctions (e.g., a temperature reading of −200 °C on a boiler), and will alert the operator by alarm or other means. The owner or operator shall record the occurrence. All instances of the alarm or other alert in an operating day constitute a single occurrence.

(ii) The monitoring system generates, updated at least hourly throughout each operating day, a running average of the monitoring values that have been obtained during that operating day, and the capability to observe this running average is readily available to the Administrator on-site during the operating day. The owner or operator shall record the occurrence of any period meeting the criteria in paragraphs (h)(1)(ii)(A) through (C) of this section. All instances in an operating day constitute a single occurrence.

(A) The running average is above the maximum or below the minimum established limits;

(B) The running average is based on at least six 1-hour average values; and

(C) The running average reflects a period of operation other than a start-up, shutdown, or malfunction.

(iii) The monitoring system is capable of detecting unchanging data during periods of operation other than start-ups, shutdowns or malfunctions, except in circumstances where the presence of unchanging data are the expected operating condition based on past experience (e.g., pH in some scrubbers), and will alert the operator by alarm or other means. The owner or operator shall record the occurrence. All instances of the alarm or other alert in an operating day constitute a single occurrence.

(iv) The monitoring system will alert the owner or operator by an alarm or other means, if the running average parameter value calculated under paragraph (h)(1)(ii) of this section reaches a set point that is appropriately related to the established limit for the parameter that is being monitored.

(v) The owner or operator shall verify the proper functioning of the monitoring system, including its ability to comply with the requirements of paragraph (h)(1) of this section, at the times specified in paragraphs (h)(1)(v)(A) through (C) of this section. The owner or operator shall document that the required verifications occurred.

(A) Upon initial installation.

(B) Annually after initial installation.

(C) After any change to the programming or equipment constituting the monitoring system, which might reasonably be expected to alter the monitoring system's ability to comply with the requirements of this section.

(vi) The owner or operator shall retain the records identified in paragraphs (h)(1)(vi)(A) through (D) of this section.

(A) Identification of each parameter, for each item of equipment, for which the owner or operator has elected to comply with the requirements of paragraph (h) of this section.

(B) A description of the applicable monitoring system(s), and how compliance will be achieved with each requirement of paragraphs (h)(1)(i) through (v) of this section. The description shall identify the location and format (e.g., on-line storage, log entries) for each required record. If the description changes, the owner or operator shall retain both the current and the most recent superseded description, as specified in paragraph (h)(1)(vi)(D) of this section.

(C) A description, and the date, of any change to the monitoring system that would reasonably be expected to affect its ability to comply with the requirements of paragraph (h)(1) of this section.

(D) The owner or operator subject to paragraph (h)(1)(vi)(B) of this section shall retain the current description of the monitoring system as long as the description is current. The current description shall, at all times, be retained on-site or be accessible from a central location by computer or other means that provides access within 2 hours after a request. The owner or operator shall retain all superseded descriptions for at least 5 years after the date of their creation. Superseded descriptions shall be retained on-site (or accessible from a central location by computer or other means that provides access within 2 hours after a request) for at least 6 months after their creation. Thereafter, superseded descriptions may be stored off-site.

(2) If an owner or operator has elected to implement the requirements of paragraph (h)(1) of this section for a monitored parameter with respect to an item of equipment and a period of 6 consecutive months has passed without an excursion as defined in paragraph (h)(2)(iv) of this section, the owner or operator is no longer required to record the daily average value, for any operating day when the daily average is less than the maximum, or greater than the minimum established limit. With approval by the Administrator, monitoring data generated prior to the compliance date of this subpart shall be credited toward the period of 6 consecutive months, if the parameter limit and the monitoring accomplished

during the period prior to the compliance date was required and/or approved by the Administrator.

(i) If the owner or operator elects not to retain the daily average values, the owner or operator shall notify the Administrator in the next Periodic Report. The notification shall identify the parameter and unit of equipment.

(ii) If, on any operating day after the owner or operator has ceased recording daily average values as provided in paragraph (h)(2) of this section, there is an excursion as defined in paragraph (h)(2)(iv) of this section, the owner or operator shall immediately resume retaining the daily average value for each operating day and shall notify the Administrator in the next Periodic Report. The owner or operator shall continue to retain each daily average value until another period of 6 consecutive months has passed without an excursion as defined in paragraph (h)(2)(iv) of this section.

(iii) The owner or operator shall retain the records specified in paragraph (h)(1) of this section, for the duration specified in paragraph (h) of this section. For any calendar week, if compliance with paragraphs (h)(1)(i) through (iv) of this section does not result in retention of a record of at least one occurrence or measured parameter value, the owner or operator shall record and retain at least one parameter value during a period of operation other than a start-up, shutdown, or malfunction.

(iv) For the purposes of paragraph (h) of this section, an excursion means that the daily average of monitoring data for a parameter is greater than the maximum, or less than the minimum established value, except as provided in paragraphs (h)(2)(iv)(A) and (B) of this section.

(A) The daily average value during any start-up, shutdown, or malfunction shall not be considered an excursion for purposes of paragraph (h)(2) of this section, if the owner or operator follows the applicable provisions of the start-up, shutdown, and malfunction plan required by the General Provisions in §63.6(e)(3).

(B) An excused excursion, as described in §63.1438(g), shall not be considered an excursion for the purposes of paragraph (h)(2) of this section.

[64 FR 29439, June 1, 1999, as amended at 65 FR 26502, May 8, 2000]

TABLE 1 OF SUBPART PPP OF PART 63—APPLICABILITY OF GENERAL PROVISIONS TO SUBPART PPP AFFECTED SOURCES

Reference	Applies to subpart PPP	Explanation
63.1(a)(1)	Yes	§63.1423 specifies definitions in addition to or that supersede definitions in §63.2.
63.1(a)(2)	Yes.	
63.1(a)(3)	Yes	§63.1422(f) through (k) of this subpart and §63.160(b) identify those standards which overlap with the requirements of subparts PPP and H and specify how compliance shall be achieved.
63.1(a)(4)	Yes	Subpart PPP (this table) specifies the applicability of each paragraph in subpart A to subpart PPP.
63.1(a)(5)	No	Reserved.
63.1(a)(6)–(8)	Yes.	
63.1(a)(9)	No.	Reserved.
63.1(a)(10)	Yes.	
63.1(a)(11)	Yes.	
63.1(a)(12)–(14)	Yes.	
63.1(b)(1)	No	§63.1420(a) contains specific applicability criteria.
63.1(b)(2)	Yes.	
63.1(b)(3)	Yes.	
63.1(c)(1)	Yes	Subpart PPP (this table) specifies the applicability of each paragraph in subpart A to subpart PPP.
63.1(c)(2)	No	Area sources are not subject to subpart PPP.
63.1(c)(3)	No	Reserved.
63.1(c)(4)	Yes.	
63.1(c)(5)	Yes	Except that affected sources are not required to submit notifications overridden by this table.
63.1(d)	No	Reserved.
63.1(e)	Yes.	
63.2	Yes	§63.1423 specifies those subpart A definitions that apply to subpart PPP.
63.3	Yes.	
63.4(a)(1)–(3)	Yes.	
63.4(a)(4)	No	Reserved.
63.4(a)(5)	Yes.	

Reference	Applies to subpart PPP	Explanation
63.4(b)	Yes.	
63.4(c)	Yes.	
63.5(a)(1)	Yes	Except the terms ''source'' and ''stationary source'' should be interpreted as having the same meaning as ''affected source.''
63.5(a)(2)	Yes.	
63.5(b)(1)	Yes	Except § 63.1420(g) defines when construction or reconstruction is subject to new source standards.
63.5(b)(2)	No	Reserved.
63.5(b)(3)	Yes.	
63.5(b)(4)	Yes	Except that the initial notification requirements in § 63.1439(e)(3) shall apply instead of the requirements in § 63.9(b).
63.5(b)(5)	Yes.	
63.5(b)(6)	Yes	Except that § 63.1420(g) defines when construction or reconstruction is subject to the new source standards.
63.5(c)	No	Reserved.
63.5(d)(1)(i)	Yes.	
63.5(d)(1)(ii)	Yes	Except that § 63.5(d)(1)(ii)(H) does not apply.
63.5(d)(1)(iii)	No	§ 63.1439(e)(5) and § 63.1434(e) specify notification of compliance status requirements.
63.5(d)(2)	No.	
63.5(d)(3)	Yes	Except § 63.5(d)(3)(ii) does not apply, and equipment leaks subject to § 63.1434 are exempt.
63.5(d)(4)	Yes.	
63.5(e)	Yes.	
63.5(f)(1)	Yes.	
63.5(f)(2)	Yes	Except that where § 63.9(b)(2) is referred to, the owner or operator need not comply.
63.6(a)	Yes.	
63.6(b)(1)	Yes.	
63.6(b)(2)	Yes.	
63.6(b)(3)	Yes.	
63.6(b)(4)	Yes.	
63.6(b)(5)	Yes.	
63.6(b)(6)	No	Reserved.
63.6(b)(7)	No.	
63.6(c)(1)	Yes	§ 63.1422 specifies the compliance date.
63.6(c)(2)	No.	
63.6(c)(3)	No	Reserved.
63.6(c)(4)	No	Reserved.
63.6(c)(5)	Yes.	
63.6(d)	No	Reserved.
63.6(e)	Yes	Except as otherwise specified for individual paragraphs (below), and § 63.6(e) does not apply to Group 2 emission points.
63.6(e)(1)(i)	No	This is addressed by § 63.1420(h)(4).
63.6(e)(1)(ii)	Yes.	
63.6(e)(1)(iii)	Yes.	
63.6(e)(2)	Yes.	
63.6(e)(3)(i)	Yes	For equipment leaks (subject to § 63.1434), the start-up, shutdown, and malfunction plan requirement of § 63.6(e)(3)(i) is limited to combustion, recovery, or recapture devices and is optional for other equipment. The start-up, shutdown, and malfunction plan may include written procedures that identify conditions that justify a delay of repair.[a]
63.6(e)(3)(i)(A)	Yes	This is also addressed by § 63.1420(h)(4).
63.6(e)(3)(i)(B)	Yes.	
63.6(e)(3)(i)(C)	Yes.	
63.6(e)(3)(ii)	Yes.	
63.6(e)(3)(iii)	No	Recordkeeping and reporting are specified in § 63.1439(b)(1).
63.6(e)(3)(iv)	No	Recordkeeping and reporting are specified in § 63.1439(b)(1).
63.6(e)(3)(v)	No	Requirement is specified in § 63.1439(b)(1).
63.6(e)(3)(vi)	Yes.	
63.6(e)(3)(vii)	Yes.	
63.6(e)(3)(vii) (A)	Yes.	
63.6(e)(3)(vii) (B)	Yes	Except the plan shall provide for operation in compliance with § 63.1420(i)(4).
63.6(e)(3)(vii) (C)	Yes.	
63.6(e)(3)(viii)	Yes.	
63.6(f)(1)	Yes.	
63.6(f)(2)	Yes	Except 63.7(c), as referred to in § 63.6(f)(2)(iii)(D) does not apply, and except that § 63.6(f)(2)(ii) does not apply to equipment leaks subject to § 63.1434.
63.6(f)(3)	Yes.	
63.6(g)	Yes.	
63.6(h)	No	Subpart PPP does not require opacity and visible emission standards.
63.6(i)(1)	Yes.	
63.6(i)(2)	Yes.	
63.6(i)(3)	Yes.	

Reference	Applies to subpart PPP	Explanation
63.6(i)(4)(i)(A)	Yes.	
63.6(i)(4)(i)(B)	No	Dates are specified in § 63.1422(e) and § 63.1439(e)(4)(i) for all emission points except equipment leaks, which are covered under § 63.182(a)(6)(i).
63.6(i)(4)(ii)	No.	
63.6(i)(5)–(14)	Yes.	
63.6(i)(15)	No	Reserved.
63.6(i)(16)	Yes.	
63.6(j)	Yes.	
63.7(a)(1)	Yes.	
63.7(a)(2)	No	§ 63.1439(e) (5) and (6) specify the submittal dates of performance test results for all emission points except equipment leaks; for equipment leaks, compliance demonstration results are reported in the Periodic Reports.
63.7(a)(3)	Yes.	
63.7(b)	No	§ 63.1437(a)(4) specifies notification requirements.
63.7(c)	No	Except if the owner or operator chooses to submit an alternative nonopacity emission standard for approval under § 63.6(g).
63.7(d)	Yes.	
63.7(e)(1)	Yes	Except that all performance tests shall be conducted during worst case operating conditions.
63.7(e)(2)	Yes.	
63.7(e)(3)	No	Subpart PPP specifies requirements.
63.7(e)(4)	Yes.	
63.7(f)	Yes	Since a site-specific test plan is not required, the notification deadline in § 63.7(f)(2)(i) shall be 60 days prior to the performance test, and in § 63.7(f)(3) approval or disapproval of the alternative test method shall not be tied to the site-specific test plan.
63.7(g)	Yes	Except the notification of compliance status report requirements in § 63.1439(e)(5) shall apply instead of those in § 63.9(h). In addition, equipment leaks subject to § 63.1434 are not required to conduct performance tests.
63.7(h)	Yes	Except § 63.7(h)(4)(ii) is not applicable, since the site-specific test plans in § 63.7(c)(2) are not required.
63.8(a)(1)	Yes.	
63.8(a)(2)	No.	
63.8(a)(3)	No	Reserved.
63.8(a)(4)	Yes.	
63.8(b)(1)	Yes.	
63.8(b)(2)	No	Subpart PPP specifies locations to conduct monitoring.
63.8(b)(3)	Yes.	
63.8(c)(1)	Yes.	
63.8(c)(1)(i)	Yes.	
63.8(c)(1)(ii)	No	For all emission points except equipment leaks, comply with § 63.1439(b)(1)(i)(B); for equipment leaks, comply with § 63.181(g)(2)(ii).
63.8(c)(1)(iii)	Yes.	
63.8(c)(2)	Yes.	
63.8(c)(3)	Yes.	
63.8(c)(4)	No	§ 63.1438 specifies monitoring requirements; not applicable to equipment leaks, because § 63.1434 does not require continuous monitoring systems.
63.8(c)(5)–(8)	No.	
63.8(d)	No.	
63.8(e)	No.	
63.8(f)(1)–(3)	Yes.	
63.8(f)(4)(i)	Yes	Except the timeframe for submitting request is specified in § 63.1439(f) or (g); not applicable to equipment leaks, because § 63.1434 (through subpart H of this part) specifies acceptable alternative methods.
63.8(f)(4)(ii)	Yes.	
63.8(f)(4)(iii)	Yes.	
63.8(f)(5)(i)	Yes.	
63.8(f)(5)(ii)	No.	
63.8(f)(5)(iii)	Yes.	
63.8(f)(6)	No	Subpart PPP does not require CEMs.
63.8(g)	No	Data reduction procedures specified in § 63.1439(d) and (h); not applicable to equipment leaks.
63.9(a)	Yes.	
63.9(b)	No	The initial notification requirements are specified in § 63.1439(e)(3).
63.9(c)	Yes.	
63.9(d)	Yes.	
63.9(e)	No	§ 63.1437(a)(4) specifies notification deadline.
63.9(f)	No	Subpart PPP does not require opacity and visible emission standards.
63.9(g)	No.	
63.9(h)	No	§ 63.1439(e)(5) specifies notification of compliance status requirements.
63.9(i)	Yes.	
63.9(j)	No.	
63.10(a)	Yes.	
63.10(b)(1)	No	§ 63.1439(a) specifies record retention requirements.

Reference	Applies to subpart PPP	Explanation
63.10(b)(2)	No	Subpart PPP specifies recordkeeping requirements.
63.10(b)(3)	Yes.	
63.10(c)	No	§ 63.1439 specifies recordkeeping requirements.
63.10(d)(1)	Yes.	
63.10(d)(2)	No	§ 63.1439(e)(5) and (6) specify performance test reporting requirements; not applicable to equipment leaks.
63.10(d)(3)	No	Subpart PPP does not require opacity and visible emission standards.
63.10(d)(4)	Yes.	
63.10(d)(5)(i)	Yes	Except that reports required by § 63.10(d)(5)(i) shall be submitted at the same time as Periodic Reports specified in § 63.1439(e)(6). The start-up, shutdown, and malfunction plan, and any records or reports of start-up, shutdown, and malfunction do not apply to Group 2 emission points.
63.10(d)(5)(ii)	No.	
63.10(e)	No	§ 63.1439 specifies reporting requirements.
63.10(f)	Yes.	
63.11	Yes.	
63.12	Yes	Except that the authority of § 63.177 (for equipment leaks) will not be delegated to States.
63.13–63.15	Yes.	

[a] The plan, and any records or reports of start-up, shutdown, and malfunction do not apply to Group 2 emission points.

[65 FR 26502, May 8, 2000]

Table 2 of Subpart PPP of Part 63—Applicability of General Provisions to Subpart PPP Affected Sources

Reference	Applies to subpart PPP	Explanation	Applicable section of subpart PPP
Subpart F:			
63.100	No.		
63.101	Yes	Several definitions from 63.101 are referenced at 63.1423.	63.1423.
63.102–63.103	No.		
63.104	Yes	With the differences noted in 63.1435(b) through (d).	63.1435.
63.105	Yes	With the differences noted in 63.1433(b)	63.1433.
63.106	No.		
Subpart G:			
63.110	No.		
63.111	Yes	Several definitions from 63.111 are incorporated by reference into 63.1423.	63.1423.
63.112	No.		
63.113–63.118	Yes	For THF facilities, with the differences noted in 63.1425(f)(1) through (f)(10).	63.1425.
	No	For epoxide facilities, except that 63.115(d) is used for TRE determinations.	63.1428.
63.119–63.123	Yes	With the differences noted in 63.1432(b) through 63.1432(p).	63.1432.
63.124–63.125	No	Reserved.	
63.126–63.130	No.		
63.131	No	Reserved.	
63.132–63.147	Yes	With the differences noted in 63.1433(a)(1) through 63.1433(a)(19).	63.1433.
63.148–63.149	Yes	With the differences noted in 63.1432(b) through 63.1432(p) and 63.1433(a)(1) through 63.1433(a)(19).	63.1432 and 63.1433.
63.150	No.		
63.151–63.152	No.		
Subpart H:			
63.160–63.182	Yes	Subpart PPP affected sources shall comply with all requirements of subpart H, with the differences noted in 63.1422(d), 63.1422(h), and 63.1434(b) through (g).	63.1434.
Subpart U:			
63.480–63.487	No.		
63.488	Yes	Portions of 63.488(b) and (e) are cross-referenced in subpart PPP..	
63.489–63.506	No.		

TABLE 3 TO SUBPART PPP OF PART 63—GROUP 1 STORAGE VESSELS AT EXISTING AND NEW AFFECTED SOURCES

Vessel capacity (cubic meters)	Vapor Pressure [a] (kilopascals)
75 ≤ capacity < 151	≥ 13.1
capacity ≥ 151	≥ 5.2

[a] Maximum true vapor pressure of total organic HAP at storage temperature.

TABLE 4 TO SUBPART PPP OF PART 63—KNOWN ORGANIC HAP FROM POLYETHER POLYOL PRODUCTS

Organic HAP/chemical name [CAS No.]
1,3 Butadiene (106990)
Epichlorohydrin (106898)
Ethylene Oxide (75218)
n-Hexane (110543)
Methanol (67561)
Propylene Oxide (75569)
Toluene (108883)

CAS No. = Chemical Abstracts Service Registry Number.

[65 FR 26505, May 8, 2000]

TABLE 5 TO SUBPART PPP OF PART 63—PROCESS VENTS FROM BATCH UNIT OPERATIONS—MONITORING, RECORDKEEPING, AND REPORTING REQUIREMENTS

Control technique	Parameter to be monitored	Recordkeeping and reporting requirements for monitored parameters
Thermal Incinerator	Firebox temperature [a]	1. Continuous records as specified in § 63.1429.[b] 2. Record and report the average firebox temperature measured during the performance test—NCS.[c] 3. Record the daily average firebox temperature as specified in § 63.1429. 4. Report all daily average temperatures that are below the minimum operating temperature established in the NCS or operating permit and all instances when monitoring data are not collected—PR.[nsp=e]
Catalytic Incinerator	Temperature upstream and downstream of the catalyst bed.	1. Continuous records as specified in § 63.1429.[b] 2. Record and report the average upstream and downstream temperatures and the average temperature difference across the catalyst bed measured during the performance test—NCS.[c] 3. Record the daily average upstream temperature and temperature difference across catalyst bed as specified in § 63.1429. 4. Report all daily average upstream temperatures that are below the minimum upstream temperature established in the NCS or operating permit—PR.[d e] 5. Report all daily average temperature differences across the catalyst bed that are below the minimum difference established in the NCS or operating permit—PR.[d e] 6. Report all instances when monitoring data are not collected.[e]
Boiler or Process Heater with a design heat input capacity less than 44 megawatts and where the process vents are *not* introduced with or used as the primary fuel.	Firebox temperature [a]	1. Continuous records as specified in § 63.1429.[b] 2. Record and report the average firebox temperature measured during the performance test—NCS [c] 3. Record the daily average firebox temperature as specified in § 63.1429.[d] 4. Report all daily average temperatures that are below the minimum operating temperature established in the NCS or operating permit and all instances when monitoring data are not collected—PR.[d e]

Control technique	Parameter to be monitored	Recordkeeping and reporting requirements for monitored parameters
Flare	Presence of a flame at the pilot light.	1. Hourly records of whether the monitor was continuously operating during batch emission episodes selected for control and whether a flame was continuously present at the pilot light during each hour. 2. Record and report the presence of a flame at the pilot light over the full period of the compliance determination—NCS.[c] 3. Record the times and durations of all periods during batch emission episodes when all flames at the pilot light of a flare are absent or the monitor is not operating. 4. Report the times and durations of all periods during batch emission episodes selected for control when all flames at the pilot light of a flare are absent—Pr.[d]
Absorber[f]	Liquid flow rate into or out of the scrubber, or the pressure drop across the scrubber.	1. Records every 15 minutes, as specified in § 63.1429.[b] 2. Record and report the average liquid flow rate into or out of the scrubber, or the pressure drop across the scrubber, measured during the performance test—NCS. 3. Record the liquid flow rate into or out of the scrubber, or the pressure drop across the scrubber, every 15 minutes, as specified in § 63.1429. 4. Report all scrubber flow rates or pressure drop values that are below the minimum operating value established in the NCS or operating permit and all instances when monitoring data are not collected—PR.[d e]
	pH of the scrubber	1. Once daily records as specified in § 63.1429.[b] 2. Record and report the average pH of the scrubber effluent measured during the performance test—NCS.[c] 3. Record at least once daily the pH of the scrubber effluent. 4. Report all pH scrubber effluent readings out of the range established in the NCS or operating permit and all instances when monitoring data are not collected—PR.[d,e] If a base absorbent is used, report all pH values that are below the minimum operating values. If an acid absorbent is used, report all pH values that are above the maximum operating values.
Condenser[f]	Exit (product side) temperature	1. Continuous records as specified in § 63.1429.[b] 2. Record and report the average exit temperature measured during the performance test—NCS. 3. Record the daily average exit temperature as specified in § 63.1429. 4. Report all daily average exit temperatures that are above the maximum operating temperature established in the NCS or operating permit and all instances when monitoring data are not collected—PR.[d e]
Carbon Adsorber[f]	Total regeneration stream mass or volumetric flow during carbon bed regeneration cycle(s), and.	1. Record of total regeneration stream mass or volumetric flow for each carbon bed regeneration cycle. 2. Record and report the total regeneration stream mass or volumetric flow during each carbon bed regeneration cycle during the performance test—NCS.[c] 3. Report all carbon bed regeneration cycles when the total regeneration stream mass or volumetric flow is above the maximum flow rate established in the NCS or operating permit—PR.[d e]
	Temperature of the carbon bed after regeneration and within 15 minutes of completing any cooling cycle(s).	1. Record the temperature of the carbon bed after each regeneration and within 15 minutes of completing any cooling cycle(s). 2. Record and report the temperature of the carbon bed after each regeneration and within 15 minutes of completing any cooling cycle(s) measured during the performance test—NCS.[c] 3. Report all carbon bed regeneration cycles when the temperature of the carbon bed after regeneration, or within 15 minutes of completing any cooling cycle(s), is above the maximum temperature established in the NCS or operating permit—PR.[d e]
Absorber, Condenser, and Carbon Adsorber (as an alternative to the above).	Concentration level or reading indicated by an organic monitoring device at the outlet of the recovery device.	1. Continuous records as specified in § 63.1429.[b] 2. Record and report the average concentration level or reading measured during the performance test—NCS. 3. Record the daily average concentration level or reading as specified in § 63.1429.

Control technique	Parameter to be monitored	Recordkeeping and reporting requirements for monitored parameters
		4. Report all daily average concentration levels or readings that are above the maximum concentration or reading established in the NCS or operating permit and all instances when monitoring data are not collected—PR.[d e]
All Combustion, recovery, or recapture devices.	Diversion to the atmosphere from the combustion, recovery, or recapture device or.	1. Hourly records of whether the flow indicator was operating during batch emission episodes selected for control and whether a diversion was detected at any time during the hour, as specified in § 63.1429. 2. Record and report the times of all periods during batch emission episodes selected for control when emissions are diverted through a bypass line, or the flow indicator is not operating—PR.[d]
	Monthly inspections of sealed valves.	1. Records that monthly inspections were performed as specified in § 63.1429. 2. Record and report all monthly inspections that show that valves are in the diverting position or that a seal has been broken—PR.[d]
ECO	Time from the end of the epoxide feed, or the epoxide partial pressure in the reactor or direct measurement of epoxide concentration in the reactor liquid at the end of the ECO.	1. Records at the end of each batch, as specified in § 63.1427(i). 2. Record and report the average parameter value of the parameters chosen, measured during the performance test. 3. Record the batch cycle ECO duration, epoxide partial pressure, or epoxide concentration in the liquid at the end of the ECO 4. Report all batch cycle parameter values outside of the ranges established in accordance with § 63.1427(i)(3) and all instances when monitoring data were not collected—PR.[d e]

[a] Monitor may be installed in the firebox or in the ductwork immediately downstream of the firebox before any substantial heat exchange is encountered.
[b] "Continuous records" is defined in § 63.111.
[c] NCS = Notification of Compliance Status described in § 63.1429.
[d] PR = Periodic Reports described in § 63.1429.
[e] The periodic reports shall include the duration of periods when monitoring data are not collected as specified in § 63.1439.
[f] Alternatively, these devices may comply with the organic monitoring device provisions listed at the end of this table.

Table 6 to Subpart PPP of Part 63—Process Vents From Continuous Unit Operations—Monitoring, Recordkeeping, and Reporting Requirements

Control technique	Parameter to be monitored	Recordkeeping and reporting requirements for monitored parameters
Thermal Incinerator	Firebox temperature[a]	1. Continuous records as specified in § 63.1429.[b] 2. Record and report the average firebox temperature measured during the performance test—NCS.[c] 3. Record the daily average firebox temperature for each operating day. 4. Report all daily average temperatures that are below the minimum operating temperature established in the NCS or operating permit and all instances when sufficient monitoring data are not collected—PR.[d e]
Catalytic Incinerator	Temperature upstream and downstream of the catalyst bed.	1. Continuous records as specified in § 63.1429.[b] 2. Record and report the average upstream and downstream temperatures and the average temperature difference across the catalyst bed measured during the performance test—NCS [c] 3. Record the daily average upstream temperature and temperature difference across catalyst bed for each operating day. 4. Report all daily average upstream temperatures that are below the minimum upstream temperature established in the NCS or operating permit—PR.[d e] 5. Report all daily average temperature differences across the catalyst bed that are below the minimum difference established in the NCS or operating permit—PR.[d e] 6. Report all operating days when insufficient monitoring data are collected.[e]

Control technique	Parameter to be monitored	Recordkeeping and reporting requirements for monitored parameters
Boiler or Process Heater with a design heat input capacity less than 44 megawatts and where the process vents are *not* introduced with or used as the primary fuel.	Firebox temperature [a]	1. Continuous records as specified in § 63.1429.[b] 2. Record and report the average firebox temperature measured during the performance test—NCS [c] 3. Record the daily average firebox temperature for each operating day.[d] 4. Report all daily average temperatures that are below the minimum operating temperature established in the NCS or operating permit and all instances when insufficient monitoring data are collected—PR.[d e]
Flare	Presence of a flame at the pilot light.	1. Hourly records of whether the monitor was continuously operating and whether a flame was continuously present at the pilot light during each hour. 2. Record and report the presence of a flame at the pilot light over the full period of the compliance determination—NCS.[c] 3. Record the times and durations of all periods when all flames at the pilot light of a flare are absent or the monitor is not operating. 4. Report the times and durations of all periods when all flames at the pilot light of a flare are absent—Pr.[d]
Absorber [f]	Exit temperature of the absorbing liquid, and.	1. Continuous records as specified in § 63.1429.[b] 2. Record and report the exit temperature of the absorbing liquid averaged over the full period of the TRE determination—NCS.[c] 3. Record the daily average exit temperature of the absorbing liquid for each operating day. 4. Report all the daily average exit temperatures of the absorbing liquid that are below the minimum operating value established in the NCS or operating—PR.[d e]
	Exit specific gravity for the absorbing liquid.	1. Continuous records as specified in § 63.1429.[b] 2. Record and report the exit specific gravity averaged over the full period of the TRE determination—NCS. 3. Record the daily average exit specific gravity for each operating day. 4. Report all daily average exit specific gravity values that are below the minimum operating value established in the NCS or operating—PR.[d e]
Condenser [f]	Exit (product side) temperature	1. Continuous records as specified in § 63.1429.[b] 2. Record and report the exit temperature averaged over the full period of the TRE determination—NCS. 3. Record the daily average exit temperature for each operating day. 4. Report all daily average exit temperatures that are above the maximum operating temperature established in the NCS or operating—PR.[d e]
Carbon Adsorber [f]	Total regeneration stream mass or volumetric flow during carbon bed regeneration cycle(s), and.	1. Record of total regeneration stream mass or volumetric flow for each carbon bed regeneration cycle. 2. Record and report the total regeneration stream mass or volumetric flow during each carbon bed regeneration cycle during the period of the TRE determination—NCS.[c] 3. Report all carbon bed regeneration cycles when the total regeneration stream mass or volumetric flow is above the maximum flow rate established in the NCS or operating permit—PR.[d e]
	Temperature of the carbon bed after regeneration and within 15 minutes of completing any cooling cycle(s).	1. Record the temperature of the carbon bed after each regeneration and within 15 minutes of completing any cooling cycle(s). 2. Record and report the temperature of the carbon bed after each regeneration during the period of the TRE determination—NCS[c] 3. Report all carbon bed regeneration cycles when the temperature of the carbon bed after regeneration is above the maximum temperature established in the NCS or operating permit—PR.[d,e]
Absorber, Condenser, and Carbon Adsorber (as an alternative to the above).	Concentration level or reading indicated by an organic monitoring device at the outlet of the recovery device.	1. Continuous records as specified in § 63.1429.[b] 2. Record and report the concentration level or reading averaged over the full period of the TRE determination—NCS. 3. Record the daily average concentration level or reading for each operating day. 4. Report all daily average concentration levels or readings that are above the maximum concentration or reading established in the NCS or operating—PR.[d e]

Control technique	Parameter to be monitored	Recordkeeping and reporting requirements for monitored parameters
All Combustion, recovery, or recapture devices.	Diversion to the atmosphere from the combustion, recovery, or recapture device *or*.	1. Hourly records of whether the flow indicator was operating and whether a diversion was detected at any time during each hour. 2. Record and report the times of all periods when the vent stream is diverted through a bypass line, or the flow indicator is not operating—PR.[d]
	Monthly inspections of sealed valves.	1. Records that monthly inspections were performed as specified in § 63.1429. 2. Record and report all monthly inspections that show that valves are in the diverting position or that a seal has been broken—PR.[d]

[a] Monitor may be installed in the firebox or in the ductwork immediately downstream of the firebox before any substantial heat exchange is encountered.
[b] ''Continuous records'' is defined in § 63.111.
[c] NCS = Notification of Compliance Status described in § 63.1429.
[d] PR = Periodic Reports described in § 63.1429.
[e] The periodic reports shall include the duration of periods when monitoring data are not collected as specified in § 63.1439.
[f] Alternatively, these devices may comply with the organic monitoring device provisions listed at the end of this table.

Table 7 to Subpart PPP of Part 63—Process Vents From Continuous Unit Operations—Monitoring, Recordkeeping, and Reporting Requirements

Control technique	Parameters to be monitored	Established operating parameter(s)
Thermal incinerator	Firebox temperature	Minimum temperature.
Catalytic incinerator	Temperature upstream and downstream of the catalyst bed.	Minimum upstream temperature; and minimum temperature difference across the catalyst bed.
Boiler or process heater	Firebox temperature	Minimum temperature.
Absorber	Liquid flow rate or pressure drop; and pH of scrubber effluent, if an acid or base absorbent is used.	Minimum flow rate or pressure drop; and maximum pH if an acid absorbent is used, or minimum pH if a base absorbent is used.
Condenser	Exit temperature	Maximum temperature.
Carbon adsorber	Total regeneration stream mass or volumetric flow during carbon bed regeneration cycle; and temperature of the carbon bed after regeneration (and within 15 minutes of completing any cooling cycle(s)).	Maximum mass or volumetric flow; and maximum temperature.
Extended Cookout (ECO)	Time from the end of the epoxide feed to the end of the ECO, or the reactor epoxide partial pressure at the end of the ECO, or the epoxide concentration in the reactor liquid at the end of the ECO.	Minimum duration, or maximum partial pressure at the end of ECO, or maximum epoxide concentration in the reactor liquid at the end of ECO.
Other devices (or as an alternate to the above).[a]	HAP concentration level or reading at outlet of device.	Maximum HAP concentration or reading.

[a] Concentration is measured instead of an operating parameter.

Table 8 to Subpart PPP of Part 63—Routine Reports Required by This Subpart

Reference	Description of report	Due date
§ 63.1439(b) and subpart A of this part.	Refer to § 63.1439(b), Table 1 of this subpart, and to subpart A of this part.	Refer to subpart A of this part.
§ 63.1439(e)(3)	Initial notification	New affected sources w/ initial start-up at least 90 days after June 1, 1999: submit the application for approval of construction or reconstruction in lieu of the initial notification report. New affected sources w/ initial start-up prior to 90 days after June 1, 1999:by 90 days after June 1, 1999.
§ 63.1439(e)(4)	Precompliance Report[a]	Existing affected sources: 12 months prior to compliance date. New affected sources: with the application for approval of construction or reconstruction.

Reference	Description of report	Due date
§63.1439(e)(5)	Notification of Compliance Status[b].	Within 150 days after the compliance date.
§63.1439(e)(6)	Periodic Reports	Semiannually, no later than 60 days after the end of each 6-month period. See §63.1439(e)(6)(i) for the due date for this report.
§63.1439(e)(6)(iii)	Quarterly reports for sources with excursions (upon request of the Administrator).	No later than 60 days after the end of each quarter.
§63.506(e)(7)(i)	Storage Vessels Notification of Inspection.	At least 30 days prior to the refilling of each storage vessel or the inspection of each storage vessel.

[a] There may be two versions of this report due at different times; one for equipment subject to §63.1434 and one for other emission points subject to this subpart.
[b] There will be two versions of this report due at different times; one for equipment subject to §63.1434 and one for other emission points subject to this subpart.

[65 FR 26506, May 8, 2000]

Subpart QQQ—National Emission Standards for Hazardous Air Pollutants for Primary Copper Smelting

SOURCE: 67 FR 40491, June 12, 2002

WHAT THIS SUBPART COVERS

§63.1440 What is the purpose of this subpart?

This subpart establishes national emission standards for hazardous air pollutants (NESHAP) for primary copper smelters. This subpart also establishes requirements to demonstrate initial and continuous compliance with all applicable emission limitations, work practice standards, and operation and maintenance requirements in this subpart.

§63.1441 Am I subject to this subpart?

You are subject to this subpart if you own or operate a primary copper smelter that is (or is part of) a major source of hazardous air pollutant (HAP) emissions on the first compliance date that applies to you, and your primary copper smelter uses batch copper converters as defined in §63.1459. Your primary copper smelter is a major source of HAP if it emits or has the potential to emit any single HAP at the rate of 10 tons or more per year or any combination of HAP at a rate of 25 tons or more per year.

§63.1442 What parts of my plant does this subpart cover?

(a) This subpart applies to each new and existing affected source at your primary copper smelter. The affected sources are each copper concentrate dryer, each smelting furnace, each slag cleaning vessel, each copper converter department, and the entire group of fugitive emission sources, as defined in §63.1459.

(b) An affected source at your primary copper smelter is existing if you commenced construction or reconstruction of the affected source before April 20, 1998.

(c) An affected source at your primary copper smelter is new if you commenced construction or reconstruction of the affected source on or after April 20, 1998. An affected source is reconstructed if it meets the definition of ''reconstruction'' in §63.2.

§63.1443 When do I have to comply with this subpart?

(a) If you have an existing affected source, you must comply with each emission limitation, work practice standard, and operation and maintenance requirement in this subpart that applies to you no later than June 13, 2005.

(b) If you have a new affected source and its initial startup date is on or before June 12, 2002, you must comply with each emission limitation, work practice standard, and operation and maintenance requirement in this subpart that applies to you by June 12, 2002.

(c) If you have a new affected source and its initial startup date is after June 12, 2002, you must comply with each emission limitation, work practice standard, and operation and maintenance requirement in this subpart

that applies to you upon initial startup.

(d) If your primary copper smelter is an area source that becomes a major source of HAP, the compliance dates listed in paragraphs (d)(1) and (2) of this section apply to you.

(1) Any portion of the existing primary copper smelter that is a new affected source or a new reconstructed source must be in compliance with this subpart upon startup.

(2) All other parts of the primary copper smelter must be in compliance with this subpart no later than 3 years after it becomes a major source.

(e) You must meet the notification and schedule requirements in § 63.1454. Several of these notifications must be submitted before the compliance date for your affected source.

EMISSION LIMITATIONS AND WORK PRACTICE STANDARDS

§ 63.1444 What emissions limitations and work practice standards must I meet for my copper concentrate dryers, smelting furnaces, slag cleaning vessels, and copper converter departments?

(a) *Copper concentrate dryers.* For each copper concentrate dryer, you must comply with the emission limitation in paragraph (a)(1) or (2) of this section that applies to you.

(1) For each existing copper concentrate dryer, you must not cause to be discharged to the atmosphere from the dryer vent any gases that contain total particulate matter in excess of 50 milligrams per dry standard cubic meter (mg/dscm) as measured using the test methods specified in § 63.1450(a).

(2) For each new copper concentrate dryer, you must not cause to be discharged to the atmosphere from the dryer vent any gases that contain total particulate matter in excess of 23 mg/dscm as measured using the test methods specified in § 63.1450(a).

(b) *Smelting furnaces.* For each smelting furnace, you must comply with the emission limitations and work practice standards in paragraphs (b)(1) and (2) of this section.

(1) For each smelting furnace, you must not cause to be discharged to the atmosphere any process off-gas that contains nonsulfuric acid particulate matter in excess of 6.2 mg/dscm as measured using the test methods specified in § 63.1450(b). Process off-gas from a smelting furnace is generated when copper ore concentrates and fluxes are being smelted to form molten copper matte and slag layers.

(2) For each smelting furnace, you must control the process fugitive emissions released when tapping copper matte or slag from the smelting furnace according to paragraphs (b)(2)(i) and (ii) of this section.

(i) At all times when copper matte or slag is tapped from the smelting furnace, you must operate a capture system that collects the gases and fumes released from the tapping port in use. The design and placement of this capture system must be such that the tapping port opening, launder, and receiving vessel (e.g., ladle, slag pot) are positioned within the confines or influence of the capture system's ventilation draft during those times when the copper matte or slag is flowing from the tapping port opening.

(ii) You must not cause to be discharged to the atmosphere from the capture system used to comply with paragraph (b)(2)(i) of this section any gases that contain total particulate matter in excess of 23 mg/dscm as measured using the test methods specified in § 63.1450(a).

(c) *Slag cleaning vessels.* For each slag cleaning vessel, you must comply with the emission limitations and work practice standards in paragraphs (c)(1) through (3) of this section that apply to you.

(1) For each slag cleaning vessel, except as provided for in paragraph (c)(2) of this section, you must not cause to be discharged to the atmosphere any process off-gas that contains nonsulfuric acid particulate matter in excess of 6.2 mg/dscm as measured using the test methods specified in § 63.1450(b).

(2) As an alternative to complying with the emission limit for nonsulfuric acid particulate matter in paragraph (c)(1) of this section, for each existing slag cleaning vessel you may choose to comply with the emission limit for total particulate matter specified in this paragraph (c)(2). You must not cause to be discharged to the atmosphere any process off-gas that contains

total particulate matter in excess of 46 mg/dscm as measured using the test methods specified in § 63.1450(a).

(3) For each slag cleaning vessel, you must control process fugitive emissions released when tapping copper matte or slag from the slag cleaning vessel according to paragraphs (c)(3)(i) and (ii) of this section.

(i) At all times when copper matte or slag is tapped from the slag cleaning vessel, you must operate a capture system that collects the gases and fumes released from the tapping port in use. The design and placement of this capture system must be such that the tapping port opening, launder, and receiving vessel (e.g., ladle, slag pot) are positioned within the confines or influence of the capture system's ventilation draft during those times when the copper matte or slag is flowing from the tapping port opening.

(ii) You must not cause to be discharged to the atmosphere from the capture system used to comply with paragraph (c)(3)(i) of this section any gases that contain total particulate matter in excess of 23 mg/dscm as measured using the test methods specified in § 63.1450(a).

(d) *Existing copper converter departments.* For each existing copper converter department, you must comply with the emission limitations and work practice standards in paragraphs (d)(1) through (6) of this section that apply to you.

(1) You must operate a capture system that collects the process off gas vented from each batch copper converter. At all times when one or more batch copper converters are blowing, you must operate the capture system according to the written operation and maintenance plan that has been prepared according to the requirements in § 63.1447(b).

(2) If your copper converter department uses Pierce-Smith converters, the capture system design must include use of a primary hood that covers the entire mouth of the converter vessel when the copper converter is positioned for blowing. Additional hoods (e.g., secondary hoods) or other capture devices must be included in the capture system design as needed to achieve the opacity limit in paragraph (d)(4) of this section. The capture system design may use multiple intake and duct segments through which the ventilation rates are controlled independently of each other, and individual duct segments may be connected to separate control devices.

(3) If your copper converter department uses Hoboken converters, the capture system must collect all process off-gas vented during blowing through the side-flue intake on each converter vessel.

(4) You must operate the capture system such that any visible emissions exiting the roof monitors or roof exhaust fans on the building housing the copper converter department meet the opacity limit as specified in paragraphs (d)(4)(i) and (ii) of this section.

(i) The opacity of any visible emissions exiting the roof monitors or roof exhaust fans on the building housing the copper converter department must not exceed 4 percent as determined by a performance test conducted according to § 63.1450(c).

(ii) The opacity limit in paragraph (d)(4)(i) of this section applies only at those times when a performance test is conducted according to § 63.1450(c). The requirements for compliance with opacity and visible emission standards specified in § 63.6(h) do not apply to this opacity limit.

(5) You must not cause to be discharged to the atmosphere from any Pierce-Smith converter primary hood capture system or Hoboken converter side-flue intake capture system any process off-gas that contains nonsulfuric acid particulate matter in excess of 6.2 mg/dscm as measured using the test methods specified in § 63.1450(b).

(6) You must not cause to be discharged to the atmosphere from any secondary capture system any gases that contain total particulate matter in excess of 23 mg/dscm as measured using the test methods specified in § 63.1450(a).

(e) *New copper converter departments.* For each new copper converter department for which construction commenced on or after April 20, 1998, the use of batch copper converters is prohibited.

(f) *Baghouses.* For each baghouse applied to meet any total particulate

matter emission limit in paragraphs (a) through (d) of this section, you must operate the baghouse such that the bag leak detection system does not alarm for more than 5 percent of the total operating time in any semiannual reporting period.

(g) *Venturi wet scrubbers.* For each venturi wet scrubber applied to meet any total particulate matter emission limit in paragraphs (a) through (d) of this section, you must maintain the hourly average pressure drop and scrubber water flow rate at or above the minimum levels established during the initial or subsequent performance test.

(h) *Other control devices.* For each control device other than a baghouse or venturi wet scrubber applied to meet any total particulate matter emission limit in paragraphs (a) through (d) of this section, you must operate the control device as specified in paragraphs (h)(1) and (2) of this section.

(1) You must select one or more operating parameters, as appropriate for the control device design, that can be used as representative and reliable indicators of the control device operation.

(2) You must maintain the hourly average value for each of the selected parameters at or above the minimum level or at or below the maximum level, as appropriate for the selected parameter, established during the initial or subsequent performance test.

§ 63.1445 What work practice standards must I meet for my fugitive dust sources?

(a) You must control particulate matter emissions from fugitive dust sources at your primary copper smelter by operating according to a written fugitive dust control plan that has been approved by the designated authority. For the purpose of complying with this paragraph (a) you may use an existing fugitive dust control plan provided that the plan complies with the requirements of this section. A fugitive dust control plan is considered to be approved if the plan has been incorporated in your applicable State implementation plan, and the document addresses the fugitive dust sources specified in paragraph (b) of this section and includes the information specified in paragraph (c) of this section.

(b) Your fugitive dust control plan must address each of the fugitive dust emission sources listed in paragraphs (b)(1) through (6) of this section that are located at your primary copper smelter.

(1) On-site roadways used by trucks or other motor vehicles (e.g., front-end loaders) when transporting bulk quantities of fugitive dust materials. Paved roads and parking areas that are not used by these vehicles do not need to be included in the plan (e.g., employee and visitor parking lots).

(2) Unloading of fugitive dust materials from trucks or railcars.

(3) Outdoor piles used for storage of fugitive dust materials.

(4) Bedding areas used for blending copper concentrate and other feed constituents.

(5) Each transfer point in conveying systems used to transport fugitive dust materials. These points include, but are not limited to, transfer of material from one conveyor belt to another and transfer of material to a hopper or bin.

(6) Other site-specific sources of fugitive dust emissions that the Administrator or delegated permitting authority designate to be included in your fugitive dust control plan.

(c) Your fugitive dust control plan must describe the control measures you use to control fugitive dust emissions from each source addressed in the plan, as applicable and appropriate for your site conditions. Examples of control measures include, but are not limited to, locating the source inside a building or other enclosure, installing and operating a local hood capture system over the source and venting the captured gas stream to a control device, placing material stockpiles below grade, installing wind screens or wind fences around the source, spraying water on the source as weather conditions require, applying appropriate dust suppression agents on the source, or combinations of these control measures.

(d) The requirement for you to operate according to a written fugitive dust control plan must be incorporated in your operating permit that is issued by the designated permitting authority

under part 70 of this chapter. A copy of your fugitive dust control plan must be sent to the designated permitting authority on or before the compliance date for your primary copper smelter, as specified in § 63.1443.

§ 63.1446 What alternative emission limitation may I meet for my combined gas streams?

(a) For situations where you combine gas streams from two or more affected sources for discharge to the atmosphere through a single vent, you may choose to meet the requirements in paragraph (b) of this section as an alternative to complying with the individual total particulate matter emission limits specified in § 63.1444 that apply to you. This alternative emission limit for a combined gas stream may be used for any combination of the affected source gas steams specified in paragraphs (a)(1) through (5) of this section.

(1) Gas stream discharged from a copper concentrate dryer vent that would otherwise be subject to § 63.1444(a)(1) or (2);

(2) Gas stream discharged from a smelting furnace capture system that would otherwise be subject to § 63.1444(b)(2)(ii);

(3) Process off-gas stream discharged from a slag cleaning vessel that would otherwise be subject to § 63.1444(c)(2);

(4) Gas stream discharged from a slag cleaning vessel capture system that would otherwise be subject to § 63.1444(c)(3)(ii); and

(5) Gas stream discharged from a batch copper converter secondary capture system that would otherwise be subject to § 63.1444(d)(5).

(b) You must meet the requirements specified in paragraphs (b)(1) and (2) of this section for the combined gas stream discharged through a single vent.

(1) For each combined gas stream discharged through a single vent, you must not cause to be discharged to the atmosphere any gases that contain total particulate matter in excess of the emission limit calculated using the procedure in paragraph (b)(2) of this section and measured using the test methods specified in § 63.1450(a).

(2) You must calculate the alternative total particulate matter emission limit for your combined gas stream using Equation 1 of this section. The volumetric flow rate value for each of the individual affected source gas streams that you use for Equation 1 (i.e., the flow rate of the gas stream discharged from the affected source but before this gas stream is combined with the other gas streams) is to be the average of the volumetric flow rates measured using the test method specified in § 63.1450(a)(1)(ii):

$$E_{Alt} = \frac{E_d Q_d + E_{sv} Q_{sv} + E_{scvp} Q_{scvp} + E_{scvf} Q_{scvf} + E_{cc} Q_{cc}}{Q_d + Q_{sv} + Q_{scvp} + Q_{scvf} + Q_{cc}} \qquad \text{(Eq. 1)}$$

Where

E_{Alt} = Alternative total particulate matter emission limit for the combined gas stream discharged to atmosphere through a single vent (mg/dscm);

E_d = Total particulate matter emission limit applicable to copper concentrate dryer as specified in § 63.1444(a)(1) or (2) (mg/dscm);

Q_d = Copper concentrate dryer exhaust gas stream volumetric flow rate before being combined with other gas streams (dscm);

E_{sv} = Total particulate matter emission limit for smelting furnace capture system as specified in § 63.1444(b)(2)(ii) (mg/dscm);

Q_{sv} = Smelting furnace capture system exhaust gas stream volumetric flow rate before being combined with other gas streams (dscm);

E_{scvp} = Total particulate matter emission limit for slag cleaning vessel process off-gas as specified in § 63.1444(c)(2) (mg/dscm);

Q_{scvp} = Slag cleaning vessel process off-gas volumetric flow rate before

being combined with other gas streams (dscm);

E_{scvf} = Total particulate matter emission limit for slag cleaning vessel capture system as specified in § 63.1444(c)(3)(ii) (mg/dscm);

Q_{scvf} = Slag cleaning vessel capture system exhaust gas stream volumetric flow rate before being combined with other gas streams (dscm);

E_{cc} = Total particulate emission limit for the batch copper converter secondary capture system as specified in § 63.1544(d)(5) (mg/dscm); and

Q_{cc} = Batch copper converter capture system exhaust gas stream volumetric flow rate before being combined with other gas streams (dscm).

(c) For each baghouse applied to meet any total particulate matter emission limit in paragraph (b) of this section, you must operate the baghouse such that the bag leak detection system does not alarm for more than 5 percent of the total operating time in any semiannual reporting period.

(d) For each venturi wet scrubber applied to meet any total particulate matter emission limit in paragraph (b) of this section, you must maintain the hourly average pressure drop and scrubber water flow rate at or above the minimum levels established during the initial or subsequent performance test.

(e) For each control device other than a baghouse or venturi wet scrubber applied to meet any total particulate matter emission limit in paragraph (b) of this section, you must operate the control device as specified in paragraphs (e)(1) and (2) of this section.

(1) You must select one or more operating parameters, as appropriate for the control device design, that can be used as representative and reliable indicators of the control device operation.

(2) You must maintain the hourly average value for each of the selected parameters at or above the minimum level or at or below the maximum level, as appropriate for the selected parameter, established during the initial or subsequent performance test.

OPERATION AND MAINTENANCE REQUIREMENTS

§ 63.1447 What are my operation and maintenance requirements?

(a) As required by § 63.6(e)(1)(i), you must always operate and maintain your affected source, including air pollution control and monitoring equipment, in a manner consistent with good air pollution control practices for minimizing emissions at least to the levels required by this subpart.

(b) You must prepare and operate at all times according to a written operation and maintenance plan for each capture system and control device subject to standards in § 63.1444 or § 63.1446. The plan must address the requirements in paragraphs (b)(1) through (3) of this section as applicable to the capture system or control device.

(1) *Preventative maintenance.* You must perform preventative maintenance for each capture system and control device according to written procedures specified in your operation and maintenance plan. The procedures must include a preventative maintenance schedule that is consistent with the manufacturer's instructions for routine and long-term maintenance.

(2) *Capture system inspections.* You must conduct monthly inspections of the equipment components of the capture system that can affect the performance of the system to collect the gases and fumes emitted from the affected source (e.g., hoods, exposed ductwork, dampers, fans) according to written procedures specified in your operation and maintenance plan. The inspection procedure must include the requirements in paragraphs (b)(2)(i) through (iii) of this section as applicable to the capture system or control device.

(i) Observations of the physical appearance of the equipment to confirm the physical integrity of the equipment (e.g., verify by visual inspection no holes in ductwork or hoods, no flow constrictions caused by dents, or accumulated dust in ductwork).

(ii) Inspection, and if necessary testing, of equipment components to confirm that the component is operating as intended (e.g., verify by appropriate measures that flow or pressure sensors,

damper plates, automated damper switches and motors are operating according to manufacture or engineering design specifications).

(iii) In the event that a defective or damaged component is detected during an inspection, you must initiate corrective action according to written procedures specified in your operation and maintenance plan to correct the defect or deficiency as soon as practicable.

(3) *Copper converter department capture system operating limits.* You must establish, according to the requirements in paragraph (b)(3)(i) through (iii) of this section, operating limits for the capture system that are representative and reliable indicators of the performance of capture system when it is used to collect the process off-gas vented from batch copper converters during blowing.

(i) Select operating limit parameters appropriate for the capture system design that are representative and reliable indicators of the performance of the capture system when it is used to collect the process off-gas vented from batch copper converters during blowing. At a minimum, you must use appropriate operating limit parameters that indicate the level of the ventilation draft and the damper position settings for the capture system when operating to collect the process off-gas from the batch copper converters during blowing. Appropriate operating limit parameters for ventilation draft include, but are not limited to, volumetric flow rate through each separately ducted hood, total volumetric flow rate at the inlet to control device to which the capture system is vented, fan motor amperage, or static pressure. Any parameter for damper position setting may be used that indicates the duct damper position relative to the fully open setting.

(ii) For each operating limit parameter selected in paragraph (b)(3)(i) of this section, designate the value or setting for the parameter at which the capture system operates during batch copper converter blowing. If your blister copper production operations allow for more than one batch copper converter to be operating simultaneously in the blowing mode, designate the value or setting for the parameter at which the capture system operates during each possible batch copper converter blowing configuration that you may operate at your smelter (i.e., the operating limits with one converter blowing, with two converters blowing, with three converters blowing, as applicable to your smelter).

(iii) Include documentation in the plan to support your selection of the operating limits established for the capture system. This documentation must include a description of the capture system design, a description of the capture system operation during blister copper production, a description of each selected operating limit parameter, a rationale for why you chose the parameter, a description of the method used to monitor the parameter according to the requirements in §63.1452(a), and the data used to set the value or setting for the parameter for each of your batch copper converter configurations.

(4) *Baghouse leak detection corrective actions.* In the event a bag leak detection system alarm is triggered, you must initiate corrective action according to written procedures specified in your operation and maintenance plan to determine the cause of the alarm within 1 hour of the alarm, initiate corrective action to correct the cause of the problem within 24 hours of the alarm, and complete the corrective action as soon as practicable. Corrective actions may include, but are not limited to, the activities listed in paragraphs (b)(3)(i) through (vi) of this section.

(i) Inspecting the baghouse for air leaks, torn or broken bags or filter media, or any other condition that may cause an increase in emissions.

(ii) Sealing off defective bags or filter media.

(iii) Replacing defective bags or filter media or otherwise repairing the control device.

(iv) Sealing off a defective baghouse compartment.

(v) Cleaning the bag leak detection system probe, or otherwise repair the bag leak detection system.

(vi) Shutting down the process producing the particulate emissions.

GENERAL COMPLIANCE REQUIREMENTS

63.1448 What are my general requirements for complying with this subpart?

(a) You must be in compliance with the emission limitations, work practice standards, and operation and maintenance requirements in this subpart at all times, except during periods of startup, shutdown, and malfunction as defined in §63.2.

(b) During the period between the compliance date specified for your affected source in §63.1443, and the date upon which continuous monitoring systems have been installed and certified and any applicable operating limits have been set, you must maintain a log detailing the operation and maintenance of the process and emissions control equipment.

(c) You must develop and implement a written startup, shutdown, and malfunction plan according to the provisions in §63.6(e)(3).

INITIAL COMPLIANCE REQUIREMENTS

§63.1449 By what dates must I conduct performance tests or other initial compliance demonstrations?

(a) As required in §63.7(a)(2), you must conduct a performance test within 180 calendar days of the compliance date that is specified in §63.1443 for your affected source to demonstrate initial compliance with each emission and opacity limit in §63.1443 and §63.1446 that applies to you.

(b) For each work practice standard and operation and maintenance requirement that applies to you where initial compliance is not demonstrated using a performance test or opacity observation, you must demonstrate initial compliance within 30 calendar days after the compliance date that is specified for your affected source in §63.1443.

§63.1450 What test methods and other procedures must I use to demonstrate initial compliance with the emission limitations?

(a) *Total particulate matter emission limits*. You must conduct each performance test to determine compliance with the total particulate matter emission limits in §63.1444 or §63.1446 that apply to you according to the requirements for representative test conditions specified in §63.7(e)(1) and using the test methods and procedures in paragraphs (a)(1) through (5) of this section.

(1) Determine the concentration of total particulate matter according to the test methods in appendix A to part 60 of this chapter as specified in paragraphs (a)(1)(i) through (iii) of this section.

(i) Method 1 to select sampling port locations and the number of traverse points. Sampling ports must be located at the outlet of the control device and prior to any releases to the atmosphere.

(ii) Method 2, 2F, or 2G to determine the volumetric flow rate of the stack gas.

(iii) Method 3, 3A, or 3B to determine the dry molecular weight of the stack gas.

(iv) Method 4 to determine the moisture content of the stack gas.

(v) Method 5, 5D, or 17, as applicable, to determine the concentration of total particulate matter. You can also use ASTM D4536–96 incorporated by reference in §63.14 as an alternative to the sampling equipment and operating procedures in Method 5 or 17 when testing a positive pressure baghouse, but you must use the sample traverse location and number of sampling points described in Method 5D.

(2) As an alternative to using the applicable method specified in paragraph (a)(1)(v) of this section, you may determine total particulate matter emissions from the control device using Method 29 in appendix A of part 60 of this chapter provided that you follow the procedures and precautions prescribed in Method 29. If the control device is a positive pressure baghouse, you must also follow the measurement procedure specified in sections 4.1 through 4.3 of Method 5D.

(3) You must conduct three separate test runs for each performance test. Each test run must have a minimum sampling time of 60 minutes and a minimum sampling volume of 0.85 dscm. For the purpose of determining compliance with the applicable total particulate matter emission limit, the arithmetic mean of the results for the three separate test runs is used.

(4) For a venturi wet scrubber applied to emissions from an affected source and subject to operating limits in §63.1444(g) or §63.1446(d) for pressure drop and scrubber water flow rate, you must establish site-specific operating limits according to the procedures in paragraph (a)(4)(i) and (ii) of this section.

(i) Using the continuous parameter monitoring system (CPMS) required in §63.1452, measure and record the pressure drop and scrubber water flow rate during each run of the particulate matter performance test.

(ii) Compute and record the hourly average pressure drop and scrubber water flow rate for each individual test run. Your operating limits are the lowest average pressure drop and scrubber water flow rate value in any of the three runs that meet the applicable emission limit.

(5) For a control device other than a baghouse or venturi wet scrubber applied to emissions from an affected source and subject to site-specific operating limit(s) in §63.1444(h) or §63.1446(e) for appropriate, site-specific operating parameters that are representative and reliable indicators of the control device performance, you must establish a site-specific operating limit(s) according to the procedures in paragraph (a)(5)(i) through (iv) of this section.

(i) Select one or more operating parameters, as appropriate for the control device design, that can be used as representative and reliable indicators of the control device operation.

(ii) Using the CPMS required in §63.1452, measure and record the selected operating parameters for the control device during each run of the total particulate matter performance test.

(iii) Compute and record the hourly average value for each of the selected operating parameters for each individual test run. Your operating limits are the lowest value or the highest value, as appropriate for the selected operating parameter, measured in any of the three runs that meet the applicable emission limit.

(iv) You must prepare written documentation to support your selection of the operating parameters used for the control device. This documentation must include a description of each selected parameter, a rationale for why you chose the parameter, a description of the method used to monitor the parameter, and the data recorded during the performance test and used to set the operating limit(s).

(b) *Nonsulfuric acid particulate matter emission limits.* You must conduct each performance test to determine compliance with the nonsulfuric acid particulate matter emission limits in §63.1444 that apply to you according to the requirements for representative test conditions specified in §63.7(e)(1) and using the test methods and procedures in paragraphs (b)(1) and (2) of this section.

(1) Determine the concentration of nonsulfuric acid particulate matter according to the test methods in appendix A to part 60 of this chapter as specified in paragraphs (b)(1)(i) through (v) of this section.

(i) Method 1 to select sampling port locations and the number of traverse points. Sampling ports must be located at the outlet of the control device and prior to any releases to the atmosphere.

(ii) Method 2, 2F, or 2G to determine the volumetric flow rate of the stack gas.

(iii) Method 3, 3A, or 3B to determine the dry molecular weight of the stack gas.

(iv) Method 4 to determine the moisture content of the stack gas.

(v) Method 5B to determine the nonsulfuric acid particulate matter emissions.

(2) You must conduct three separate test runs for each performance test. Each test run must have a minimum sampling time of 240 minutes and a minimum sampling volume of 3.4 dscm. For the purpose of determining compliance with the nonsulfuric acid particulate matter emission limit, the arithmetic mean of the results for the three separate test runs is used.

(c) *Copper converter department capture system opacity limit.* You must conduct each performance test to determine compliance with the opacity limit in §63.1444 using the test methods and procedures in paragraphs (c)(1) through (9) of this section.

(1) You must conduct the performance test during the period when the primary copper smelter is operating under conditions representative of the smelter's normal blister copper production rate. You may not conduct a performance test during periods of startup, shutdown, or malfunction. Before conducting the performance test, you must prepare a written test plan specifying the copper production conditions to be maintained throughout the opacity observation period and including a copy of the written documentation you have prepared according to paragraph (a)(3) of this section to support the established operating limits for the copper converter department capture system. You must submit a copy of the test plan for review and approval by the Administrator or delegated authority. During the observation period, you must collect appropriate process information and copper converter department capture system operating information to prepare documentation sufficient to verify that all opacity observations were made during the copper production and capture system operating conditions specified in the approved test plan.

(2) You must notify the Administrator or delegated authority before conducting the opacity observations to allow the Administrator or delegated authority the opportunity to have authorized representatives attend the test. Written notification of the location and scheduled date for conducting the opacity observations must be received by the Administrator on or before 30 calendar days before this scheduled date.

(3) You must gather the data needed for determining compliance with the opacity limit using qualified visible emission observers and process monitors as described in paragraphs (c)(3)(i) and (ii) of this section.

(i) Opacity observations must be performed by a sufficient number of qualified visible emission observers to obtain two complete concurrent sets of opacity readings for the required observation period. Each visible emission observer must be certified as a qualified observer by the procedure specified in section 3 of Method 9 in appendix A of part 60 of this chapter. The entire set of readings during the required observation period does not need to be made by the same two observers. More than two observers may be used to allow for substitutions and provide for observer rest breaks. The owner or operator must obtain proof of current visible emission reading certification for each observer.

(ii) A person (or persons) familiar with the copper production operations conducted at the smelter must serve as the indoor process monitor. The indoor process monitor is stationed at a location inside the building housing the batch copper converters such that he or she can visually observe and record operations that occur in the batch copper converter aisle during the times that the visible emission observers are making opacity readings. More than one indoor process monitor may be used to allow for substitutions and provide for rest breaks.

(4) You must make all opacity observations using Method 9 in appendix A to part 60 of this chapter and following the procedures described in paragraphs (c)(4)(i) and (ii) of this section.

(i) Each visible emission observer must make his or her readings at a position from the outside of the building that houses the copper converter department such that the observer's line-of-sight is approximately perpendicular to the longer axis of the converter building, and the observer has an unobstructed view of the building roof monitor sections or roof exhaust fan outlets that are positioned over each of the batch copper converters inside the building. Opacity readings can only be made during those times when the observer's position meets the sun orientation and other conditions specified in section 2.1 of Method 9.

(ii) At 15-second intervals, each visible emission observer views the building roof monitor sections or roof exhaust fan outlets that are positioned over each of the batch copper converters inside the building and reads the opacity of the visible plumes. If no plume is visible, the observer records zero as the opacity value for the 15-second interval. In situations when it is possible for an observer to distinguish two or more visible emission plumes from the building roof monitor sections

or roof exhaust fan outlets, the observer must identify, to the extent feasible, the plume having the highest opacity and record his or her opacity reading for that plume as the opacity value for the 15-second interval.

(5) You must make opacity observations for a period of sufficient duration to obtain a minimum of 120 1-minute intervals during which at least one copper converter is blowing and no interferences have occurred from other copper production events, as specified in paragraph (c)(7) of this section, which generate visible emissions inside the building that potentially can interfere with the visible emissions from the converter capture systems as seen by the outside observers. To obtain the required number of 1-minute intervals, the observation period may be divided into two or more segments performed on the same day or on different days if conditions prevent the required number of opacity readings from being obtained during one continuous time period. Examples of these conditions include, but are not limited to, changes in the sun's orientation relative to visible emission observers' positions such that the Method 9 conditions are no longer met or an unexpected thunder storm. If the total observation period is divided into two or more segments, all opacity observations must be made during the same set of copper production conditions described in your approved test plan as required by paragraph (c)(1) of this section.

(6) You must gather indoor process information during all times that the visible emission observers are making opacity readings outside the building housing the copper converter department. The indoor process monitor must continually observe the operations occurring in the copper converter department and prepare a written record of his or her observations using the procedure specified in paragraphs (c)(6)(i) through (iv) of this section.

(i) At the beginning of each observation period or segment, the clock time setting on the watch or clock to be used by the indoor process monitor must be synchronized with the clock time settings for the timepieces to be used by the outdoor opacity observers.

(ii) During each period or segment when opacity readings are being made by the visible emission observers, the indoor process monitor must continuously observe the operations occurring in the copper converter department and record his or her observations in a log book, on data sheets, or other type of permanent written format.

(iii) When a batch copper converter is blowing, a record must be prepared for the converter that includes, but is not limited to, the clock times for when blowing begins and when blowing ends and the converter blowing rate. This information may be recorded by the indoor process monitor or by a separate, automated computer data system.

(iv) The process monitor must record each event other than converter blowing that occurs in or nearby the converter aisle that he or she observes to generate visible emissions inside the building. The recorded entry for each event must include, but is not limited to, a description of the event and the clock times when the event begins and when the event ends.

(7) You must prepare a summary of the data for the entire observation period using the information recorded during the observation period by the outdoor visible emission observers and the indoor process monitor and the procedure specified in paragraphs (c)(7)(i) through (iv) of this section.

(i) Using the field data sheets, identify the 1-minute clock times for which a total of eight opacity readings were made and recorded by both observers at 15-second intervals according to the test procedures (i.e., a total of four opacity values have been recorded for the 1-minute interval by each of the two observers). Calculate the average of the eight 15-second interval readings recorded on the field data sheets by the two observers during the clock time minute interval (add the four consecutive 15-second interval opacity readings made by Observer A during the specified clock time minute, plus the four consecutive 15-second interval opacity readings made by Observer B during the same clock time minute, and divide the resulting total by eight). Record the clock time and the opacity average for the 1-minute interval on a data

summary sheet. Figure 1 of this subpart shows an example of the format for the data summary sheet you may use, but are not required to use.

(ii) Using the data summary sheets prepared according to paragraph (c)(7)(i) of this section and the process information recorded according to paragraph (c)(6)(iii) of this section, identify those 1-minute intervals for which at least one of the batch copper converters was blowing.

(iii) Using the data summary sheets prepared according to paragraph (c)(7)(ii) of this section and the process information recorded according to paragraph (c)(6)(iv) of this section, identify the 1-minute intervals during which at least one copper converter was blowing but none of the interference events listed in paragraphs (c)(7)(iii)(A) through (F) of this section occurred. Other ancillary activities not listed but conducted in or adjacent to the converter aisle during the opacity observations are not considered to be interference events (e.g., converter aisle cleaning, placement of smoking ladles or skulls on the converter aisle floor).

(A) Charging of copper matte, reverts, or other materials to a batch copper converter;

(B) Skimming slag or other molten materials from a batch copper converter;

(C) Pouring of blister copper or other molten materials from a batch copper converter;

(D) Return of slag or other molten materials to the flash smelting furnace or slag cleaning vessel;

(E) Roll-out or roll-in of the batch copper converter; or

(F) Smoke and fumes generated inside the converter building by operation of the smelting furnace, the slag cleaning vessel (if used), anode refining and casting processes that drift into the copper converter department.

(iv) Using the data summary sheets prepared according to paragraph (c)(7)(iii) of this section, up to five 1-minute intervals following an interference event may be eliminated from data used for the compliance determination calculation specified in paragraph (c)(8) of this section by applying a time delay factor. The time delay factor must be a constant number of minutes not to exceed 5 minutes that is added to the clock time recorded when cessation of the interference event occurs. The same time delay factor must be used for all interference events (i.e., a constant time delay factor for the smelter of 1 minute, 2 minutes, 3 minutes, 4 minutes, or 5 minutes). The number of minutes to be used for the time delay factor is determined based on the site-specific equipment and converter building configuration. An explanation of the rationale for selecting the value used for the time delay factor must be prepared and included in the test report.

(8) You must use the data summary prepared in paragraph (c)(7) of this section to calculate the average opacity value for a minimum of 120 1-minute intervals during which at least one copper converter was blowing with no interference events as determined according to paragraphs (c)(7)(iii) and (iv) of this section. Average opacity is calculated using Equation 1 of this section:

$$VE_{ave} = \frac{1}{n}\sum_{i=1}^{n} VE_i \qquad \text{(Eq. 1)}$$

Where

VE_{ave} = Average opacity to be used for compliance determination (percent);

n = Total number of 1-minute intervals during which at least one copper converter was blowing with no interference events as determined according to paragraphs (c)(7)(iii) and (iv) of this section (at least 120 1-minute intervals);

i = 1-minute interval ''i'' during which at least one copper converter was blowing with no interference events as determined according to paragraphs (c)(7)(iii) and (iv) of this section; and

VE_i = Average opacity value calculated for the eight opacity readings recorded during 1-minute interval ''i'' (percent).

(9) You must certify that the copper converter department capture system operated during the performance test at the operating limits established in your capture system operation and maintenance plan using the procedure

specified in paragraphs (c)(9)(i) through (iv) of this section.

(i) Concurrent with all opacity observations, measure and record values for each of the operating limit parameters in your capture system operation and maintenance plan according to the monitoring requirements specified in §63.1452(a).

(ii) For any dampers that are manually set and remain in the same position at all times the capture system is operating, the damper position must be visually checked and recorded at the beginning and end of each opacity observation period segment.

(iii) Review the recorded monitoring data. Identify and explain any times during batch copper converter blowing when the capture system operated outside the applicable operating limits.

(iv) Certify in your performance test report that during all observation period segments, the copper converter department capture system was operating at the values or settings established in your capture system operation and maintenance plan.

§63.1451 How do I demonstrate initial compliance with the emission limitations, work practice standards, and operation and maintenance requirements that apply to me?

(a) *Total particulate matter emission limits.* For each copper concentrate dryer, smelting furnace, slag cleaning vessel, and copper converter department subject to a total particulate matter emission limits in §63.1444 or §63.1446 that applies to you, you have demonstrated initial compliance if you meet both of the conditions in paragraphs (a)(1) and (2) of this section.

(1) The average concentration of total particulate matter from a control device applied to emissions from the affected source, measured according to the performance test procedures in §63.1450(a), did not exceed the applicable emission limit.

(2) You have submitted a notification of compliance status according to the requirements in §63.1454(e).

(b) *Nonsulfuric acid particulate matter emissions limits.* For each smelting furnace, slag cleaning vessel, and copper converter departments subject to the nonsulfuric acid particulate matter emissions limit in §63.1444 as applies to you, you have demonstrated initial compliance if you meet both of the conditions in paragraphs (b)(1) and (2) of this section.

(1) The average concentration of nonsulfuric acid particulate matter in the process off-gas discharged from the affected source, measured according to the performance test procedures in §63.1450(b), did not exceed 6.2 mg/dscm.

(2) You have submitted a notification of compliance status according to the requirements in §63.1454(e).

(c) For each existing copper converter department subject to the opacity limit in §63.1444, you have demonstrated initial compliance if you meet both of the conditions in paragraphs (c)(1) and (2) of this section.

(1) The opacity of visible emissions exiting the roof monitors or roof exhaust fans on the building housing the copper converter department measured according to the performance test procedures in §63.1450(c), did not exceed 4 percent opacity.

(2) You have submitted a notification of compliance status according to the requirements in §63.1454(e).

(d) *Copper converter department capture systems.* You have demonstrated initial compliance of the copper converter department capture system if you meet all of the conditions in paragraphs (d)(1) through (4) of this section.

(1) Prepared the capture system operation and maintenance plan according to the requirements of paragraph (a) of this section;

(2) Conducted an initial performance test according to the procedures of §63.1450(c) demonstrating the opacity of any visible emissions exiting the roof monitors or roof exhaust fans on the building housing the copper converter department does not exceed 4 percent opacity;

(3) Included in your notification of compliance status a copy of your written capture system operation and maintenance plan and have certified in your notification of compliance status that you will operate the copper converter department capture system at all times during blowing at the values or settings established for the operating limits in that plan; and

(4) Submitted a notification of compliance status according to the requirements in § 63.1454(e).

(e) *Baghouses.* For each baghouse subject to operating limits in § 63.1444(f) or § 63.1446(c), you have demonstrated initial compliance if you meet all of the conditions in paragraphs (e)(1) through (3) of this section.

(1) You have included in your written operation and maintenance plan required under § 63.1447(b) detailed descriptions of the procedures you use for inspection, maintenance, bag leak detection, and corrective action for the baghouse.

(2) You have certified in your notification of compliance status that you will operate the baghouse according to your written operation and maintenance plan.

(3) You have submitted the notification of compliance status according to the requirements in § 63.1454(e).

(f) *Venturi wet scrubbers.* For each venturi wet scrubber subject to operating limits in § 63.1444(g) or § 63.1446(d), you have demonstrated initial compliance if you meet all of the conditions in paragraphs (f)(1) through (3) of this section.

(1) Established site-specific operating limits for pressure drop and scrubber water flow rate and have a record of the pressure drop and scrubber water flow rate measured during the performance test you conduct to demonstrate initial compliance with paragraph (a) of this section.

(2) Certified in your notification of compliance status that you will operate the venturi wet scrubber within the established operating limits for pressure drop and scrubber water flow rate.

(3) Submitted a notification of compliance status according to the requirements in § 63.1454(e).

(g) *Other control devices.* For each control device other than a baghouse or venturi wet scrubber subject to operating limits in § 63.1444(h) or § 63.1446(e), you have demonstrated initial compliance if you meet all of the conditions in paragraphs (g)(1) through (4) of this section.

(1) Selected one or more operating parameters, as appropriate for the control device design, that can be used as representative and reliable indicators of the control device operation.

(2) Established site-specific operating limits for each of the selected operating parameters based on values measured during the performance test you conduct to demonstrate initial compliance with paragraph (a) of this section and have prepared written documentation according to the requirements in § 63.1450(a)(5)(iv).

(3) Included in your notification of compliance status a copy of the written documentation you have prepared to demonstrate compliance with paragraph (g)(2) of this section and have certified in your notification of compliance status that you will operate the control device within the established operating limits.

(4) Submitted a notification of compliance status according to the requirements in § 63.1454(e).

(h) *Fugitive dust sources.* For all fugitive dust sources subject to work practice standards in § 63.1445, you have demonstrated initial compliance if you meet all of the conditions in paragraphs (i)(1) through (3) of this section.

(1) Prepared a written fugitive dust control plan according to the requirements in § 63.1454 and it has been approved by the designated authority.

(2) Certified in your notification of compliance status that you will control emissions from the fugitive dust sources according to the procedures in the approved plan.

(3) Submitted the notification of compliance status according to the requirements in § 63.1454(e).

(i) *Operation and maintenance requirements.* You have demonstrated initial compliance with the operation and maintenance requirements that apply to you if you meet all of the conditions in paragraphs (i)(1) through (3) of this section.

(1) Prepared an operation and maintenance plan according to the requirements in § 63.1454(b).

(2) Certified in your notification of compliance status that you will operate each capture system and control device according to the procedures in the plan.

(3) Submitted the notification of compliance status according to the requirements in § 63.1454(e).

CONTINUOUS COMPLIANCE REQUIREMENTS

§ 63.1452 What are my monitoring requirements?

(a) *Copper converter department capture systems.* For each operating limit established under your capture system operation and maintenance plan, you must install, operate, and maintain an appropriate monitoring device according the requirements in paragraphs (a)(1) though (6) of this section to measure and record the operating limit value or setting at all times the copper converter department capture system is operating during batch copper converter blowing. Dampers that are manually set and remain in the same position at all times the capture system is operating are exempted from the requirements of this paragraph (a).

(1) Install the monitoring device, associated sensor(s), and recording equipment according to the manufacturers' specifications. Locate the sensor(s) used for monitoring in or as close to a position that provides a representative measurement of the parameter being monitored.

(2) If a flow measurement device is used to monitor the operating limit parameter, you must meet the requirements in paragraph (a)(2)(i) through (iv) of this section.

(i) Locate the flow sensor and other necessary equipment such as straightening vanes in a position that provides a representative flow.

(ii) Use a flow sensor with a minimum tolerance of 2 percent of the flow rate.

(iii) Reduce swirling flow or abnormal velocity distributions due to upstream and downstream disturbances.

(iv) Conduct a flow sensor calibration check at least semiannually.

(3) If a pressure measurement device is used to monitor the operating limit parameter, you must meet the requirements in paragraph (a)(3)(i) through (v) of this section.

(i) Locate the pressure sensor(s) in or as close to a position that provides a representative measurement of the pressure.

(ii) Minimize or eliminate pulsating pressure, vibration, and internal and external corrosion.

(iii) Use a gauge with a minimum tolerance of 0.5 inch of water or a transducer with a minimum tolerance of 1 percent of the pressure range.

(iv) Check pressure tap pluggage daily.

(v) Using a manometer, check gauge calibration quarterly and transducer calibration monthly.

(4) Conduct calibration and validation checks any time the sensor exceeds the manufacturer's specifications or you install a new sensor.

(5) At least monthly, inspect all components for integrity, all electrical connections for continuity, and all mechanical connections for leakage.

(6) Record the results of each inspection, calibration, and validation check.

(b) *Baghouses.* For each baghouse subject to the operating limit in § 63.1444(f) or § 63.1446(c) for the bag leak detection system alarm, you must at all times monitor the relative change in particulate matter loadings using a bag leak detection system according to the requirements in paragraph (b)(1) of this section and conduct regular inspections according to the requirements in paragraph (b)(2) of this section.

(1) You must install, operate, and maintain each bag leak detection system according to the requirements in paragraphs (b)(1)(i) through (vii) of this section.

(i) The system must be certified by the manufacturer to be capable of detecting emissions of particulate matter at concentrations of 10 milligrams per actual cubic meter (0.0044 grains per actual cubic foot) or less.

(ii) The system must provide output of relative changes in particulate matter loadings.

(iii) The system must be equipped with an alarm that will sound when an increase in relative particulate loadings is detected over a preset level. The alarm must be located such that it can be heard by the appropriate plant personnel.

(iv) Each system that works based on the triboelectric effect must be installed, operated, and maintained in a manner consistent with the guidance document, ''Fabric Filter Bag Leak Detection Guidance,'' EPA–454/R–98–015, September 1997. You may obtain a copy

of this guidance document by contacting the National Technical Information Service (NTIS) at 800–553–6847. You may install, operate, and maintain other types of bag leak detection systems in a manner consistent with the manufacturer's written specifications and recommendations.

(v) To make the initial adjustment of the system, establish the baseline output by adjusting the sensitivity (range) and the averaging period of the device. Then, establish the alarm set points and the alarm delay time.

(vi) Following the initial adjustment, do not adjust the sensitivity or range, averaging period, alarm set points, or alarm delay time, except as detailed in your operation and maintenance plan. Do not increase the sensitivity by more than 100 percent or decrease the sensitivity by more than 50 percent over a 365-day period unless a responsible official certifies, in writing, that the baghouse has been inspected and found to be in good operating condition.

(vii) Where multiple detectors are required, the system's instrumentation and alarm may be shared among detectors.

(2) You must conduct baghouse inspections at their specified frequencies according to the requirements in paragraphs (b)(2)(i) through (viii) of this section.

(i) Monitor the pressure drop across each baghouse cell each day to ensure pressure drop is within the normal operating range identified in the manual.

(ii) Confirm that dust is being removed from hoppers through weekly visual inspections or other means of ensuring the proper functioning of removal mechanisms.

(iii) Check the compressed air supply for pulse-jet baghouses each day.

(iv) Monitor cleaning cycles to ensure proper operation using an appropriate methodology.

(v) Check bag cleaning mechanisms for proper functioning through monthly visual inspection or equivalent means.

(vi) Make monthly visual checks of bag tension on reverse air and shaker-type baghouses to ensure that bags are not kinked (kneed or bent) or laying on their sides. You do not have to make this check for shaker-type baghouses using self-tensioning (spring-loaded) devices.

(vii) Confirm the physical integrity of the baghouse through quarterly visual inspections of the baghouse interior for air leaks.

(viii) Inspect fans for wear, material buildup, and corrosion through quarterly visual inspections, vibration detectors, or equivalent means.

(c) *Venturi wet scrubbers.* For each venturi wet scrubber subject to the operating limits for pressure drop and scrubber water flow rate in § 63.1444(g) or § 63.1446(d), you must at all times monitor the hourly average pressure drop and water flow rate using a CPMS. You must install, operate, and maintain each CPMS according to the requirements in paragraphs (c)(1) and (2) of this section.

(1) For the pressure drop CPMS, you must meet the requirements in paragraphs (c)(1)(i) through (vi) of this section.

(i) Locate the pressure sensor(s) in or as close to a position that provides a representative measurement of the pressure and that minimizes or eliminates pulsating pressure, vibration, and internal and external corrosion.

(ii) Use a gauge with a minimum measurement sensitivity of 0.5 inch of water or a transducer with a minimum measurement sensitivity of 1 percent of the pressure range.

(iii) Check the pressure tap for pluggage daily.

(iv) Using a manometer, check gauge calibration quarterly and transducer calibration monthly.

(v) Conduct calibration checks any time the sensor exceeds the manufacturer's specified maximum operating pressure range, or install a new pressure sensor.

(vi) At least monthly, inspect all components for integrity, all electrical connections for continuity, and all mechanical connections for leakage.

(2) For the scrubber water flow rate CPMS, you must meet the requirements in paragraphs (c)(2)(i) through (iv) of this section.

(i) Locate the flow sensor and other necessary equipment in a position that provides a representative flow and that

reduces swirling flow or abnormal velocity distributions due to upstream and downstream disturbances.

(ii) Use a flow sensor with a minimum measurement sensitivity of 2 percent of the flow rate.

(iii) Conduct a flow sensor calibration check at least semiannually according to the manufacturer's instructions.

(iv) At least monthly, inspect all components for integrity, all electrical connections for continuity, and all mechanical connections for leakage.

(d) *Other control devices.* For each control device other than a baghouse or venturi wet scrubber subject to the operating limits for appropriate parameters in §63.1444(h) or §63.1446(e), you must at all times monitor the hourly average pressure drop and water flow rate using a CPMS. You must install, operate, and maintain each CPMS according to the equipment manufacturer's specifications and the requirements in paragraphs (d)(1) though (5) of this section.

(1) Locate the sensor(s) used for monitoring in or as close to a position that provides a representative measurement of the parameter being monitored.

(2) Determine the hourly average of all recorded readings.

(3) Conduct calibration and validation checks any time the sensor exceeds the manufacturer's specifications or you install a new sensor.

(4) At least monthly, inspect all components for integrity, all electrical connections for continuity, and all mechanical connections for leakage.

(5) Record the results of each inspection, calibration, and validation check.

(e) Except for monitoring malfunctions, associated repairs, and required quality assurance or control activities (including as applicable, calibration checks and required zero and span adjustments), you must monitor continuously (or collect data at all required intervals) at all times an affected source is operating.

(f) You may not use data recorded during monitoring malfunctions, associated repairs, and required quality assurance or control activities in data averages and calculations used to report emission or operating levels or to fulfill a minimum data availability requirement, if applicable. You must use all the data collected during all other periods in assessing compliance.

(g) A monitoring malfunction is any sudden, infrequent, not reasonably preventable failure of the monitor to provide valid data. Monitoring failures that are caused in part by poor maintenance or careless operation are not malfunctions.

§63.1453 How do I demonstrate continuous compliance with the emission limitations, work practice standards, and operation and maintenance requirements that apply to me?

(a) *Particulate matter emission limits.* For each affected source subject to a particulate matter emission limit §63.1444 or §63.1446 as applies to you, you must demonstrate continuous compliance according to the requirements in paragraphs (a)(1) and (2) of this section.

(1) For each copper concentrate dryer, smelting furnace, slag cleaning vessel, and copper converter department subject to a total particulate matter emission limit in §63.1444 or §63.1446 as applies to you, you must demonstrate continuous compliance by meeting the conditions in paragraphs (a)(1)(i) and (ii) of this section.

(i) Maintain the average concentration of total particulate matter in the gases discharged from the affected source at or below the applicable emission limit.

(ii) Conduct subsequent performance tests following your initial performance test no less frequently than once per year according to the performance test procedures in §63.1450(a).

(2) For each smelting furnace, slag cleaning vessel, and copper converter department subject to the nonsulfuric acid particulate matter emission limit in §63.1444 as applies to you, you must demonstrate continuous compliance by meeting the conditions in paragraphs (a)(2)(i) and (ii) of this section.

(i) Maintain the average concentration of nonsulfuric acid particulate matter in the process off-gas discharged from the affected source at or below 6.2 mg/dscm.

(ii) Conduct subsequent performance tests following your initial performance test no less frequently than once

per year according to the performance test procedures in § 63.1450(b).

(b) *Copper converter department capture systems.* You must demonstrate continuous compliance of the copper converter department capture system by meeting the requirements in paragraphs (b)(1) through (4) of this section.

(1) Operate the copper converter department capture system at all times during blowing at or above the lowest values or settings established for the operating limits and demonstrated to achieve the opacity limit according to the applicable requirements of this subpart;

(2) Inspect and maintain the copper converter department capture system according to the applicable requirements in § 63.1447 and recording all information needed to document conformance with these requirements;

(3) Monitor the copper converter department capture system according to the requirements in § 63.1452(a) and collecting, reducing, and recording the monitoring data for each of the operating limit parameters according to the applicable requirements of this subpart; and

(4) Conduct subsequent performance tests according to the requirements of § 63.1450(c) following your initial performance test no less frequently than once per year to demonstrate that the opacity of any visible emissions exiting the roof monitors or roof exhaust fans on the building housing the copper converter department does not exceed 4 percent opacity.

(c) *Baghouses.* For each baghouse subject to the operating limit for the bag leak detection system alarm in § 63.1444(f) or § 63.1446(c), you must demonstrate continuous compliance by meeting the requirements in paragraphs (c)(1) through (3) of this section.

(1) Maintain the baghouse such that the bag leak detection system alarm does not sound for more than 5 percent of the operating time during any semiannual reporting period. To determine the percent of time the alarm sounded use the procedures in paragraphs (c)(1)(i) through (v) of this section.

(i) Alarms that occur due solely to a malfunction of the bag leak detection system are not included in the calculation.

(ii) Alarms that occur during startup, shutdown, or malfunction are not included in the calculation if the condition is described in the startup, shutdown, and malfunction plan, and all the actions you took during the startup, shutdown, or malfunction were consistent with the procedures in the startup, shutdown, and malfunction plan.

(iii) Count 1 hour of alarm time for each alarm when you initiated procedures to determine the cause of the alarm within 1 hour.

(iv) Count the actual amount of time you took to initiate procedures to determine the cause of the alarm if you did not initiate procedures to determine the cause of the alarm within 1 hour of the alarm.

(v) Calculate the percentage of time the alarm on the bag leak detection system sounds as the ratio of the sum of alarm times to the total operating time multiplied by 100.

(2) Maintain records of the times the bag leak detection system alarm sounded, and for each valid alarm, the time you initiated corrective action, the corrective action(s) taken, and the date on which corrective action was completed.

(3) Inspect and maintain each baghouse according to the requirements in § 63.1451(b)(2) and recording all information needed to document conformance with these requirements. If you increase or decrease the sensitivity of the bag leak detection system beyond the limits specified in § 63.1451(b)(1)(vi), you must include a copy of the required written certification by a responsible official in the next semiannual compliance report.

(d) *Venturi wet scrubbers.* For each venturi wet scrubber subject to the operating limits for pressure drop and scrubber water flow rate in § 63.1444(g) or § 63.1446(d), you must demonstrate continuous compliance by meeting the requirements of paragraphs (d)(1) through (3) of this section.

(1) Maintain the hourly average pressure drop and scrubber water flow rate at levels no lower than those established during the initial or subsequent performance test;

(2) Inspect and maintain each venturi wet scrubber CPMS according to

§63.1452(c) and recording all information needed to document conformance with these requirements; and

(3) Collect and reduce monitoring data for pressure drop and scrubber water flow rate according to §63.1452(e) and recording all information needed to document conformance with these requirements.

(e) *Other control devices.* For each control device other than a baghouse or venturi wet scrubber subject to the operating limits for site-specific operating parameters in §63.1444(h) or §63.1446(e), you must demonstrate continuous compliance by meeting the requirements of paragraphs (e)(1) through (3) of this section:

(1) Maintain the hourly average rate at levels no lower than those established during the initial or subsequent performance test;

(2) Inspect and maintain each venturi wet scrubber CPMS according to §63.1452(d) and recording all information needed to document conformance with these requirements; and

(3) Collect and reduce monitoring data for selected parameters according to §63.1452(e) and recording all information needed to document conformance with these requirements.

(f) *Fugitive dust sources.* For each fugitive dust source subject to work practice standards in §63.1445, you must demonstrate continuous compliance by implementing all of fugitive control measures specified for the source in your written fugitive dust control plan.

NOTIFICATIONS, REPORTS AND RECORDS

§63.1454 What notifications must I submit and when?

(a) You must submit all of the notifications in §§63.6(h)(4) and (h)(5), 63.7(b) and (c), 63.8(f)(4), and 63.9(b) through (h) that apply to you by the specified dates.

(b) As specified in §63.9(b)(2), if you start your affected source before June 12, 2002, you must submit your initial notification not later than October 10, 2002.

(c) As specified in §63.9(b)(3), if you start your new affected source on or after June 12, 2002, you must submit your initial notification not later than 120 calendar days after you become subject to this subpart.

(d) If you are required to conduct a performance test, you must submit a notification of intent to conduct a performance test at least 60 calendar days before the performance test is scheduled to begin as required in §63.7(b)(1).

(e) If you are required to conduct a performance test, opacity observation, or other initial compliance demonstration, you must submit a notification of compliance status according to §63.9(h)(2)(ii) by the date specified in paragraph (e)(1) or (2) of this section as applies to you.

(1) For each initial compliance demonstration that does not include a performance test, you must submit the notification of compliance status before the close of business on the 30th calendar day following the completion of the initial compliance demonstration.

(2) For each initial compliance demonstration that includes a performance test, you must submit the notification of compliance status, including the performance test results, before the close of business on the 60th calendar day following the completion of the performance test according to §63.10(d)(2).

§63.1455 What reports must I submit and when?

(a) You must submit each report in paragraphs (a)(1) and (2) of this section that applies to you.

(1) You must submit a compliance report semiannually according to the requirements in paragraph (b) of this section and containing the information in paragraph (c) of this section.

(2) You must submit an immediate startup, shutdown, and malfunction report if you had a startup, shutdown, or malfunction during the reporting period that is not consistent with your startup, shutdown, and malfunction plan. You must report the actions taken for the event by fax or telephone within 2 working days after starting actions inconsistent with the plan. You must submit the information in §63.10(d)(5)(ii) of this part by letter within 7 working days after the end of

the event unless you have made alternative arrangements with the permitting authority.

(b) Unless the Administrator has approved a different schedule under § 63.10(a), you must submit each compliance report required in paragraph (a) of this section according to the applicable requirements in paragraphs (b)(1) through (5) of this section.

(1) The first compliance report must cover the period beginning on the compliance date that is specified for your affected source in § 63.1443 and ending on June 30 or December 31, whichever date comes first after the compliance date that is specified for your source in § 63.1443.

(2) The first compliance report must be postmarked or delivered no later than July 31 or January 31, whichever date comes first after your first compliance report is due.

(3) Each subsequent compliance report must cover the semiannual reporting period from January 1 through June 30 or the semiannual reporting period from July 1 through December 31.

(4) Each subsequent compliance report must be postmarked or delivered no later than July 31 or January 31, whichever date comes first after the end of the semiannual reporting period.

(5) For each affected source that is subject to permitting regulations pursuant to 40 CFR part 70 or 40 CFR part 71, and if the permitting authority has established dates for submitting semiannual reports pursuant to 40 CFR 70.6(a)(3)(iii)(A) or 40 CFR 71.6(a)(3)(iii)(A) of this chapter, you may submit the first and subsequent compliance reports according to the dates the permitting authority has established instead of according to the dates in paragraphs (b)(1) through (4) of this section.

(c) Each compliance report must contain the information in paragraphs (c)(1) through (3) of this section and, as applicable, paragraphs (c)(4) through (8) of this section.

(1) Company name and address.

(2) Statement by a responsible official, as defined in 40 CFR 63.2, with that official's name, title, and signature, certifying the accuracy and completeness of the content of the report.

(3) Date of report and beginning and ending dates of the reporting period.

(4) If you had a startup, shutdown or malfunction during the reporting period and you took actions consistent with your startup, shutdown, and malfunction plan, the compliance report must include the information in § 63.10(d)(5)(i).

(5) If there are no deviations from any emission limitations (emission limit, operating limit, opacity limit) that applies to you and there are no deviations from the requirements for work practice standards in this subpart, a statement that there were no deviations from the emission limitations, work practice standards, or operation and maintenance requirements during the reporting period.

(6) If there were no periods during which an operating parameter monitoring system was out-of-control as specified in § 63.8(c)(7), a statement that there were no periods during which the monitoring system was out-of-control during the reporting period.

(7) For each deviation from an emission limitation (emission limit, operating limit, opacity limit) and for each deviation from the requirements for work practice standards that occurs at an affected source where you are not using a continuous monitoring system to comply with the emission limitations or work practice standards in this subpart, the compliance report must contain the information in paragraphs (b)(1) through (4) of this section and the information in paragraphs (b)(7)(i) and (ii) of this section. This includes periods of startup, shutdown, and malfunction.

(i) The total operating time of each affected source during the reporting period.

(ii) Information on the number, duration, and cause of deviations (including unknown cause, if applicable), as applicable, and the corrective action taken.

(8) For each deviation from an emission limitation (emission limit, operating limit, opacity limit, and visible emission limit) occurring at an affected source where you are using a operating parameter monitoring system to comply with the emission limitation in this subpart, you must include the information in paragraphs (b)(1)

through (4) of this section and the information in paragraphs (c)(8)(i) through (xi) of this section. This includes periods of startup, shutdown, and malfunction.

(i) The date and time that each malfunction started and stopped.

(ii) The date and time that each monitoring system was inoperative, except for zero (low-level) and high-level checks.

(iii) The date, time and duration that each monitoring system was out-of-control, including the information in § 63.8(c)(8).

(iv) The date and time that each deviation started and stopped, and whether each deviation occurred during a period of startup, shutdown, or malfunction or during another period.

(v) A summary of the total duration of the deviation during the reporting period and the total duration as a percent of the total source operating time during that reporting period.

(vi) A breakdown of the total duration of the deviations during the reporting period into those that are due to startup, shutdown, control equipment problems, process problems, other known causes, and other unknown causes.

(vii) A summary of the total duration of monitoring system downtime during the reporting period and the total duration of monitoring system downtime as a percent of the total source operating time during that reporting period.

(viii) A brief description of the process units.

(ix) A brief description of the monitoring system.

(x) The date of the latest monitoring system certification or audit.

(xi) A description of any changes in continuous monitoring systems, processes, or controls since the last reporting period.

(d) If you have obtained a Title V operating permit pursuant to 40 CFR part 70 or 40 CFR part 71 must report all deviations as defined in this subpart in the semiannual monitoring report required by 40 CFR 70.6(a)(3)(iii)(A) or 40 CFR 71.6(a)(3)(iii)(A). If you submit a compliance report pursuant to paragraph (a) of this section along with, or as part of, the semiannual monitoring report required by 40 CFR 70.6(a)(3)(iii)(A) or 40 CFR 71.6(a)(3)(iii)(A), and the compliance report includes all required information concerning deviations from any emission limitation(including any operating limit), or work practice requirement in this subpart, submission of the compliance report is deemed to satisfy any obligation to report the same deviations in the semiannual monitoring report. However, submission of a compliance report does not otherwise affect any obligation you may have to report deviations from permit requirements to the permit authority.

§ 63.1456 What records must I keep and how long must I keep my records?

(a) You must keep the records listed in paragraphs (a)(1) through (7) of this section.

(1) A copy of each notification and report that you submitted to comply with this subpart, including all documentation supporting any initial notification or notification of compliance status that you submitted, according to the requirements in § 63.10(b)(2)(xiv).

(2) The records in § 63.6(e)(3)(iii) through (v) related to startup, shutdown, and malfunction.

(3) Records of performance tests and performance evaluations as required in § 63.10(b)(2)(viii).

(4) For each monitoring system, you must keep the records specified in paragraphs (a)(4)(i) through (iv) of this section.

(i) Records described in § 63.10(b)(2)(vi) through (xi).

(ii) Monitoring data recorded by the monitoring system during a performance evaluation as required in § 63.6(h)(7)(i) and (ii).

(iii) Previous (i.e., superseded) versions of the performance evaluation plan as required in § 63.8(d)(3).

(iv) Records of the date and time that each deviation started and stopped, and whether the deviation occurred during a period of startup, shutdown, or malfunction or during another period.

(5) For each performance test you conduct to demonstrate compliance with a opacity limit according to § 63.1450(c), you must keep the records

specified in paragraphs (a)(5)(i) through (ix) of this section.

(i) Dates and time intervals of all opacity observation period segments;

(ii) Description of overall smelter operating conditions during each observation period. Identify, if any, the smelter copper production process equipment that was out-of-service during the performance test and explain why this equipment was not in operation;

(iii) Name, affiliation, and copy of current visible emission reading certification for each visible emission observer participating in the performance test;

(iv) Name, title, and affiliation for each indoor process monitor participating in the performance test;

(v) Copies of all visible emission observer opacity field data sheets;

(vi) Copies of all indoor process monitor operating log sheets;

(vii) Copies of all data summary sheets used for data reduction;

(viii) Copy of calculation sheets of the average opacity value used to demonstrate compliance with the opacity limit; and

(ix) Documentation according to the requirements in § 63.1450(c)(9)(iv) to support your selection of the site-specific capture system operating limits used for each batch copper converter capture system when blowing.

(6) For each baghouse subject to the operating limit in § 63.1444(f) or § 63.1446(c), you must keep the records specified in paragraphs (a)(6)(i) and (ii) of this section.

(i) Records of alarms for each bag leak detection system.

(ii) Description of the corrective actions taken following each bag leak detection alarm.

(7) For each control device other than a baghouse or venturi wet scrubber subject to site-specific operating limits in § 63.1444(g) or § 63.1446(f), you must keep documentation according to the requirements in § 63.1450(a)(5)(iv) to support your selection of the site-specific operating limits for the control device.

(b) Your records must be in a form suitable and readily available for expeditious review, according to § 63.10(b)(1).

(c) As specified in § 63.10(b)(1), you must keep each record for 5 years following the date of each occurrence, measurement, maintenance, corrective action, report, or record.

(d) You must keep each record on site for at least 2 years after the date of each occurrence, measurement, maintenance, corrective action, report, or record, according to § 63.10(b)(1). You can keep the records off site for the remaining 3 years.

OTHER REQUIREMENTS AND INFORMATION

§ 63.1457 What part of the general provisions apply to me?

Table 2 to this subpart shows which parts of the general provisions in §§ 63.1 through 63.15 apply to you.

§ 63.1458 Who implements and enforces this subpart?

(a) This subpart can be implemented and enforced by us, the United States Environmental Protection Agency (U.S. EPA), or a delegated authority such as your State, local, or tribal agency. If the U.S. EPA Administrator has delegated authority to your State, local, or tribal agency, then that agency has the authority to implement and enforce this subpart. You should contact your U.S. EPA Regional Office to find out if this subpart is delegated to your State, local, or tribal agency.

(b) In delegating implementation and enforcement authority of this subpart to a State, local, or tribal agency under 40 CFR part 63, subpart E, the authorities listed in paragraph (c) of this section are retained by the U.S. EPA Administrator and are not transferred to the State, local, or tribal agency.

(c) The authorities that will not be delegated to State, local, or tribal agencies are as listed in paragraphs (c)(1) through (4) of this section.

(1) Approval of alternatives to the emission limitations and work practice standards in §§ 63.1444 through 63.1446 under § 63.6(g).

(2) Approval of major alternatives to test methods under § 63.7(f) and as defined in § 63.90.

(3) Approval of major alternatives to monitoring under § 63.8(f) and as defined in § 63.90.

(4) Approval of major alternatives to recordkeeping and reporting under § 63.10(f) and as defined in § 63.90.

§ 63.1459 What definitions apply to this subpart?

Terms used in this subpart are defined in the Clean Air Act, in § 63.2, and in this section as follows:

Bag leak detection system means a system that is capable of continuously monitoring relative particulate matter (dust) loadings in the exhaust of a baghouse in order to detect bag leaks and other upset conditions. A bag leak detection system includes, but is not limited to, an instrument that operates on triboelectric, light scattering, transmittance or other effect to continuously monitor relative particulate matter loadings.

Baghouse means a control device that collects particulate matter by filtering the gas stream through bags. A baghouse is also referred to as a ''fabric filter.''

Batch copper converter means a Pierce-Smith converter or Hoboken converter in which copper matte is oxidized to form blister copper by a process that is performed in discrete batches using a sequence of charging, blowing, skimming, and pouring.

Blowing means the operating mode for a batch copper converter during which air or oxygen-enriched air is injected into the molten converter bath.

Capture system means the collection of components used to capture gases and fumes released from one or more emission points, and to convey the captured gases and fumes to a control device. A capture system may include, but is not limited to, the following components as applicable to a given capture system design: duct intake devices, hoods, enclosures, ductwork, dampers, manifolds, plenums, and fans.

Charging means the operating mode for a batch copper converter during which molten or solid material is added into the vessel.

Control device means the air pollution control equipment used to collect particulate matter emissions. Examples of such equipment include, but are not limited to, a baghouse, an electrostatic precipitator, and a wet scrubber.

Copper concentrate dryer means a vessel in which copper concentrates are heated in the presence of air to reduce the moisture content of the material. Supplemental copper-bearing feed materials and fluxes may be added or mixed with the copper concentrates fed to a copper concentrate dryer.

Copper converter department means the area at a primary copper smelter in which the copper converters are located.

Copper matte means a material predominately composed of copper and iron sulfides produced by smelting copper ore concentrates.

Deviation means any instance in which an affected source subject to this subpart or an owner or operator of such a source fails to meet any of the following:

(1) Any requirement or obligation established by this subpart including, but not limited to, any emission limitation (including any operating limit) or work practice standard;

(2) Any term or condition that is adopted to implement an applicable requirement in this subpart and that is included in the operating permit for any affected source required to obtain such a permit; or

(3) Any emission limitation (including any operating limit) or work practice standard in this subpart during startup, shutdown, or malfunction, regardless whether or not such failure is permitted by this subpart.

Emission limitation means any emission limit, opacity limit, operating limit, or visible emission limit.

Fugitive dust material means copper concentrate, dross, reverts, slag, speiss, or other solid copper-bearing materials.

Fugitive dust source means a stationary source of particulate matter emissions resulting from the handling, storage, transfer, or other management of fugitive dust materials where the source is not associated with a specific process, process vent, or stack. Examples of a fugitive dust source include, but are not limited to, on-site roadways used by trucks transporting copper concentrate, unloading of materials from trucks or railcars, outdoor material storage piles, and transfer of material to hoppers and bins.

Holding means the operating mode for a batch copper converter during which the molten bath is maintained in the vessel but no blowing is performed nor is material added into or removed from the vessel.

Opacity means the degree to which emissions reduce the transmission of light.

Particulate matter means any finely divided solid or liquid material, other than uncombined water, as measured by the specific reference method.

Pouring means the operating mode for a batch copper converter during which molten copper is removed from the vessel.

Primary copper smelter means any installation or any intermediate process engaged in the production of copper from copper sulfide ore concentrates through the use of pyrometallurgical techniques.

Responsible official means responsible official as defined in 40 CFR 70.2.

Skimming means the batch copper converter operating mode during which molten slag is removed from the vessel.

Slag cleaning vessel means a vessel that receives molten copper-bearing material and the predominant use of the vessel is to separate this material into molten copper matte and slag layers.

Smelting furnace means a furnace, reactor, or other type of vessel in which copper ore concentrate and fluxes are melted to form a molten mass of material containing copper matte and slag. Other copper-bearing materials may also be charged to the smelting furnace.

Work practice standard means any design, equipment, work practice, or operational standard, or combination thereof, that is promulgated pursuant to section 112(h) of the Clean Air Act.

As required in §63.1457, you must comply with the requirements of the NESHAP General Provisions (40 CFR part 63, subpart A) shown in the following table:

TABLE 1 TO SUBPART QQQ OF PART 63.—APPLICABILITY OF GENERAL PROVISIONS TO SUBPART QQQ

Citation	Subject	Applies to subpart QQQ	Explanation
§63.1	Applicability	Yes.	
§63.2	Definitions	Yes.	
§63.3	Units and Abbreviations	Yes.	
§63.4	Prohibited Activities	Yes.	
§63.5	Construction and Reconstruction	Yes.	
§63.6(a)-(g)	Compliance with Standards and Maintenance requirements.	Yes.	
§63.6(h)	Determining compliance with Opacity and VE standards.	No	Subpart QQQ specifies the requirements and test protocol used to determine compliance with the opacity limits.
§63.6(i)-(j)	Extension of Compliance and Presidential Compliance Exemption.	Yes.	
§63.7(a)(1)-(2)	Applicability and Performance Test Dates.	No	Subpart QQQ specifies performance test applicability and dates.
§63.7(a)(3), (b)-(h)	Performance Testing Requirements.	Yes.	
§63.8 except for (a)(4),(c)(4), and (f)(6).	Monitoring Requirements	Yes.	
§63.8(a)(4)	Additional Monitoring Requirements for Control devices in §63.11.	No	Subpart QQ does not require flares.
§63.8(c)(4)	Continuous Monitoring System Requirements.	No	Subpart QQQ specifies requirements for operation of CMS.
§63.8(f)(6)	RATA Alternative	No	Subpart QQQ does not require continuous emission monitoring systems.
§63.9	Notification Requirements	Yes.	
§63.9(g)(5)	DATA reduction	No	Subpart QQQ specifies data reduction requirements
§63.10 except for (b)(2)(xiii) and (c)(7)-(8).	Recordkeeping and reporting Requirements.	Yes.	

Citation	Subject	Applies to subpart QQQ	Explanation
§ 63.10(b)(2)(xiii)	CMS Records for RATA Alternative.	No	Subpart QQQ does not require continuous emission monitoring systems.
§ 63.10(c)(7)-(8)	Records of Excess Emissions and Parameter Monitoring Accedences for CMS.	No	Subpart QQQ specifies record keeping requirements
§ 63.11	Control Device Requirements	No	Subpart QQQ does not require flares
§ 63.12	State Authority and Delegations	Yes.	
§§ 63.13–63.15	Addresses, Incorporation by Reference, Availability of Information.	Yes.	

FIGURE 1 TO SUBPART QQQ OF PART 63.—DATA SUMMARY SHEET FOR DETERMINATION OF AVERAGE OPACITY

Clock time	Number of converters blowing	Converter aisle activity	Average opacity for 1-minute interval (percent)	Visible emissions interference observed during 1-minute interval? (yes or no)	Average opacity for 1-minute interval blowing without visible emission interferences (percent)

Subpart RRR—National Emission Standards for Hazardous Air Pollutants for Secondary Aluminum Production

SOURCE: 65 FR 15710, Mar. 23, 2000, unless otherwise noted.

GENERAL

§63.1500 Applicability.

(a) The requirements of this subpart apply to the owner or operator of each secondary aluminum production facility.

(b) The requirements of this subpart apply to the following affected sources, located at a secondary aluminum production facility that is a major source of hazardous air pollutants (HAPs) as defined in §63.2:

(1) Each new and existing aluminum scrap shredder;

(2) Each new and existing thermal chip dryer;

(3) Each new and existing scrap dryer/delacquering kiln/decoating kiln;

(4) Each new and existing group 2 furnace;

(5) Each new and existing sweat furnace;

(6) Each new and existing dross-only furnace;

(7) Each new and existing rotary dross cooler; and

(8) Each new and existing secondary aluminum processing unit.

(c) The requirements of this subpart pertaining to dioxin and furan (D/F) emissions and associated operating, monitoring, reporting and recordkeeping requirements apply to the following affected sources, located at a secondary aluminum production facility that is an area source of HAPs as defined in §63.2:

(1) Each new and existing thermal chip dryer;

(2) Each new and existing scrap dryer/delacquering kiln/decoating kiln;

(3) Each new and existing sweat furnace;

(4) Each new and existing secondary aluminum processing unit, containing one or more group 1 furnace emission units processing other than clean charge.

(d) The requirements of this subpart do not apply to manufacturers of aluminum die castings, aluminum foundries, or aluminum extruders that melt no materials other than clean charge and materials generated within the facility; and that also do not operate a thermal chip dryer, sweat furnace or scrap dryer/delacquering kiln/decoating kiln.

(e) The requirements of this subpart do not apply to facilities and equipment used for research and development that are not used to produce a saleable product.

(f) The owner or operator of a secondary aluminum production facility subject to the provisions of this subpart, is subject to the title V permitting requirements under 40 CFR parts 70 and 71, as applicable. The permitting authority may defer the affected facility from the title V permitting requirements until December 9, 2004, if the secondary aluminum production facility is not a major source and is not located at a major source as defined under 40 CFR 63.2, 70.2, or 71.2, and is not otherwise required to obtain a title V permit. If an affected facility receives a deferral from title V permitting requirements under this section, the source must submit a title V permit application by December 9, 2005. The affected facility must continue to comply with the provisions of this subpart applicable to area sources, even if a deferral from title V permitting requirements has been granted to the facility by the permitting authority.

§63.1501 Dates.

(a) The owner or operator of an existing affected source must comply with the requirements of this subpart by March 24, 2003.

(b) The owner or operator of a new affected source that commences construction or reconstruction after February 11, 1999 must comply with the requirements of this subpart by March 23, 2000 or upon startup, whichever is later.

EFFECTIVE DATE NOTE: At 67 FR 41122, June 14, 2002 §63.1501 was revised effective August 13, 2002. For the convenience of the user the revised text is set forth as follows:

§63.1501 Dates.

(a) The owner or operator of an existing affected source must comply with the requirements of this subpart by March 24, 2003.

(b) Except as provided in paragraph (c) of this section, the owner or operator of a new affected source that commences construction or reconstruction after February 11, 1999 must comply with the requirements of this subpart by March 24, 2000 or upon startup, whichever is later.

(c) The owner or operator of any affected source which is constructed or reconstructed at any existing aluminum die casting facility, aluminum foundry, or aluminum extrusion facility which otherwise meets the applicability criteria set forth in § 63.1500 must comply with the requirements of this subpart by March 24, 2003 or upon startup, whichever is later.

§ 63.1502 Incorporation by reference.

(a) The following material is incorporated by reference in the corresponding sections noted. The incorporation by reference (IBR) of certain publications listed in the rule will be approved by the Director of the Office of the Federal Register as of the date of publication of the final rule in accordance with 5 U.S.C. 552(a) and 1 CFR part 51. This material is incorporated as it exists on the date of approval:

(1) Chapters 3 and 5 of ''Industrial Ventilation: A Manual of Recommended Practice,'' American Conference of Governmental Industrial Hygienists, (23rd edition, 1998), IBR approved for § 63.1506(c), and

(2) ''Interim Procedures for Estimating Risks Associated with Exposures to Mixtures of Chlorinated Dibenzo-p-Dioxins and -Dibenzofurans (CDDs and CDFs) and 1989 Update'' (EPA/625/3–89/016).

(b) The material incorporated by reference is available for inspection at the Office of the Federal Register, 800 North Capitol Street NW, Suite 700, Washington, DC; and at the Air and Radiation Docket and Information Center, U.S. EPA, 1200 Pennsylvania Ave., NW., Washington, DC. The material is also available for purchase from the following addresses:

(1) Customer Service Department, American Conference of Governmental Industrial Hygienists (ACGIH), 1330 Kemper Meadow Drive, Cincinnati, OH 45240–1634, telephone number (513) 742–2020; and

(2) The National Technical Information Service (NTIS), 5285 Port Royal Road, Springfield, VA, NTIS no. PB 90–145756.

§ 63.1503 Definitions.

Terms used in this subpart are defined in the Clean Air Act as amended (CAA), in § 63.2, or in this section as follows:

Add-on air pollution control device means equipment installed on a process vent that reduces the quantity of a pollutant that is emitted to the air.

Afterburner means an air pollution control device that uses controlled flame combustion to convert combustible materials to noncombustible gases; also known as an incinerator or a thermal oxidizer.

Aluminum scrap shredder means a unit that crushes, grinds, or breaks aluminum scrap into a more uniform size prior to processing or charging to a *scrap dryer/delacquering kiln/decoating kiln*, or furnace. A bale breaker is not an *aluminum scrap shredder*.

Bag leak detection system means an instrument that is capable of monitoring particulate matter loadings in the exhaust of a fabric filter (*i.e.*, baghouse) in order to detect bag failures. A *bag leak detection system* includes, but is not limited to, an instrument that operates on triboelectric, light scattering, light transmittance, or other effect to monitor relative particulate matter loadings.

Chips means small, uniformly-sized, unpainted pieces of aluminum scrap, typically below 1¼ inches in any dimension, primarily generated by turning, milling, boring, and machining of aluminum parts.

Clean charge means furnace charge materials including molten aluminum; T-bar; sow; ingot; billet; pig; alloying elements; uncoated/unpainted thermally dried aluminum chips; aluminum scrap dried at 343 °C (650 °F) or higher; aluminum scrap delacquered/decoated at 482 °C (900 °F) or higher; other oil- and lubricant-free unpainted/uncoated gates and risers; oil-and lubricant-free unpainted/uncoated aluminum scrap, shapes, or products (*e.g.*, pistons) that have not undergone any process (*e.g.*, machining, coating, painting, etc.) that would cause contamination of the aluminum (with oils, lubricants, coatings, or paints); and internal runaround.

Cover flux means salt added to the surface of molten aluminum in a group

1 or group 2 furnace, without agitation of the molten aluminum, for the purpose of preventing oxidation.

D/F means dioxins and furans.

Dioxins and furans means tetra-, penta-, hexa-, and octachlorinated dibenzo dioxins and furans.

Dross means the slags and skimmings from aluminum melting and refining operations consisting of fluxing agent(s), impurities, and/or oxidized and non-oxidized aluminum, from scrap aluminum charged into the furnace.

Dross-only furnace means a furnace, typically of rotary barrel design, dedicated to the reclamation of aluminum from dross formed during melting, holding, fluxing, or alloying operations carried out in other process units. Dross and salt flux are the sole feedstocks to this type of furnace.

Emission unit means a *group 1 furnace* or *in-line fluxer* at a *secondary aluminum production facility*.

Fabric filter means an add-on air pollution control device used to capture particulate matter by filtering gas streams through filter media; also known as a baghouse.

Feed/charge means, for a furnace or other process unit that operates in batch mode, the total weight of material (including molten aluminum, T-bar, sow, ingot, etc.) and alloying agents that enter the furnace during an operating cycle. For a furnace or other process unit that operates continuously, *feed/charge* means the weight of material (including molten aluminum, T-bar, sow, ingot, etc.) and alloying agents that enter the process unit within a specified time period (*e.g.*, a time period equal to the performance test period). The *feed/charge* for a dross only furnace includes the total weight of dross and solid flux.

Fluxing means refining of molten aluminum to improve product quality, achieve product specifications, or reduce material loss, including the addition of solvents to remove impurities (solvent flux); and the injection of gases such as chlorine, or chlorine mixtures, to remove magnesium (demagging) or hydrogen bubbles (degassing). *Fluxing* may be performed in the furnace or outside the furnace by an *in-line fluxer*.

Furnace hearth means the combustion zone of a furnace in which the molten metal is contained.

Group 1 furnace means a furnace of any design that melts, holds, or processes aluminum that contains paint, lubricants, coatings, or other foreign materials with or without reactive fluxing, or processes *clean charge with reactive fluxing*.

Group 2 furnace means a furnace of any design that melts, holds, or processes only *clean charge* and that performs no *fluxing* or performs *fluxing* using only nonreactive, non-HAP-containing/non-HAP-generating gases or agents.

HCl means, for the purposes of this subpart, emissions of hydrogen chloride that serve as a surrogate measure of the total emissions of the HAPs hydrogen chloride, hydrogen fluoride and chlorine.

In-line fluxer means a device exterior to a furnace, located in a transfer line from a furnace, used to refine (flux) molten aluminum; also known as a flux box, degassing box, or demagging box.

Internal runaround means scrap material generated on-site by aluminum extruding, rolling, scalping, forging, forming/stamping, cutting, and trimming operations that do not contain paint or solid coatings. Aluminum chips generated by turning, boring, milling, and similar machining operations that have not been dried at 343 °C (650 °F) or higher, or by an equivalent non-thermal drying process, are not considered internal runaround.

Lime means calcium oxide or other alkaline reagent.

Lime-injection means the continuous addition of lime upstream of a *fabric filter*.

Melting/holding furnace, or melter/holder, means a *group 1 furnace* that processes only *clean charge*, performs melting, holding, and fluxing functions, and does not transfer molten aluminum to or from another furnace.

Operating cycle means for a batch process, the period beginning when the feed material is first charged to the operation and ending when all feed material charged to the operation has been processed. For a batch melting or holding furnace process, *operating cycle*

means the period including the charging and melting of scrap aluminum and the fluxing, refining, alloying, and tapping of molten aluminum (the period from tap-to-tap).

PM means, for the purposes of this subpart, emissions of particulate matter that serve as a measure of total particulate emissions and as a surrogate for metal HAPs contained in the particulates, including but not limited to, antimony, arsenic, beryllium, cadmium, chromium, cobalt, lead, manganese, mercury, nickel, and selenium.

Pollution prevention means source reduction as defined under the Pollution Prevention Act of 1990 (*e.g.*, equipment or technology modifications, process or procedure modifications, reformulation or redesign of products, substitution of raw materials, and improvements in housekeeping, maintenance, training, or inventory control), and other practices that reduce or eliminate the creation of pollutants through increased efficiency in the use of raw materials, energy, water, or other resources, or protection of natural resources by conservation.

Reactive fluxing means the use of any gas, liquid, or solid flux (other than cover flux) that results in a HAP emission. Argon and nitrogen are not reactive and do not produce HAPs.

Reconstruction means the replacement of components of an affected source or *emission unit* such that the fixed capital cost of the new components exceeds 50 percent of the fixed capital cost that would be required to construct a comparable new affected source, and it is technologically and economically feasible for the reconstructed source to meet relevant standard(s) established in this subpart. Replacement of the refractory in a furnace is routine maintenance and is not a *reconstruction*. The repair and replacement of *in-line fluxer* components (*e.g.*, rotors/shafts, burner tubes, refractory, warped steel) is considered to be routine maintenance and is not considered a *reconstruction*. *In-line fluxers* are typically removed to a maintenance/repair area and are replaced with repaired units. The replacement of an existing *in-line fluxer* with a repaired unit is not considered a *reconstruction*.

Residence time means, for an *afterburner*, the duration of time required for gases to pass through the *afterburner* combustion zone. *Residence time* is calculated by dividing the *afterburner* combustion zone volume in cubic feet by the volumetric flow rate of the gas stream in actual cubic feet per second.

Rotary dross cooler means a water-cooled rotary barrel device that accelerates cooling of dross.

Scrap dryer/delacquering kiln/decoating kiln means a unit used primarily to remove various organic contaminants such as oil, paint, lacquer, ink, plastic, and/or rubber from aluminum scrap (including used beverage containers) prior to melting.

Secondary aluminum processing unit (SAPU): an existing SAPU means all existing *group 1 furnaces* and all existing *in-line fluxers* within a *secondary aluminum production facility*. Each existing *group 1 furnace* or existing *in-line fluxer* is considered an *emission unit* within a *secondary aluminum processing unit*. A new *SAPU* means any combination of *group 1 furnaces* and *in-line fluxers* which are simultaneously constructed after February 11, 1999. Each of the *group 1 furnaces* or *in-line fluxers* within a new *SAPU* is considered an *emission unit* within that *secondary aluminum processing unit*.

Secondary aluminum production facility means any establishment using clean charge, post-consumer aluminum scrap, aluminum scrap, aluminum ingots, aluminum foundry returns, dross from aluminum production, or molten aluminum as the raw material and performing one or more of the following processes: scrap shredding, scrap drying/delacquering/decoating, thermal chip drying, furnace operations (*i.e.*, melting, holding, refining, fluxing, or alloying), in-line fluxing, or dross cooling. A *secondary aluminum production facility* may be independent or part of a primary aluminum production facility. A facility is a *secondary aluminum production facility* if it includes any of the affected sources listed in § 63.1500(b) or (c). Aluminum die casting facilities, aluminum foundries and aluminum extrusion facilities that process no materials other than materials generated within the facility, or

clean charge purchased or otherwise obtained from outside the facility, and that do not operate sweat furnaces, thermal chip dryers, or scrap dryers/delacquering kilns/decoating kilns are not secondary aluminum production facilities.

Sidewell means an open well adjacent to the hearth of a furnace with connecting arches between the hearth and the open well through which molten aluminum is circulated between the hearth, where heat is applied by burners, and the open well, which is used for charging scrap and solid flux or salt to the furnace, injecting fluxing agents, and skimming dross.

Sweat furnace means a furnace used exclusively to reclaim aluminum from scrap that contains substantial quantities of iron by using heat to separate the low-melting point aluminum from the scrap while the higher melting-point iron remains in solid form.

TEQ means the international method of expressing toxicity equivalents for dioxins and furans as defined in ''Interim Procedures for Estimating Risks Associated with Exposures to Mixtures of Chlorinated Dibenzo-p-Dioxins and -Dibenzofurans (CDDs and CDFs) and 1989 Update'' (EPA–625/3–89–016), available from the National Technical Information Service (NTIS), 5285 Port Royal Road, Springfield, Virginia 22161, NTIS no. PB 90–145756.

THC means, for the purposes of this subpart, total hydrocarbon emissions that also serve as a surrogate for the emissions of organic HAP compounds.

Thermal chip dryer means a device that uses heat to evaporate water, oil, or oil/water mixtures from unpainted/uncoated aluminum chips.

Three-day, 24-hour rolling average means daily calculations of the average 24-hour emission rate (lbs/ton of feed/charge), over the 3 most recent consecutive 24-hour periods, for a *secondary aluminum processing unit*.

Total reactive chlorine flux injection rate means the sum of the total weight of chlorine in the gaseous or liquid reactive flux and the total weight of chlorine in the solid reactive chloride flux, divided by the total weight of feed/charge, as determined by the procedure in § 63.1512(o).

§ 63.1504 [Reserved]

EMISSION STANDARDS AND OPERATING REQUIREMENTS

§ 63.1505 Emission standards for affected sources and emission units.

(a) *Summary*. The owner or operator of a new or existing affected source must comply with each applicable limit in this section. Table 1 to this subpart summarizes the emission standards for each type of source.

(b) *Aluminum scrap shredder*. On and after the date the initial performance test is conducted or required to be conducted, whichever date is earlier, the owner or operator of an aluminum scrap shredder at a secondary aluminum production facility that is a major source must not discharge or cause to be discharged to the atmosphere:

(1) Emissions in excess of 0.023 grams (g) of PM per dry standard cubic meter (dscm) (0.010 grain (gr) of PM per dry standard cubic foot (dscf)); and

(2) Visible emissions (VE) in excess of 10 percent opacity from any PM add-on air pollution control device if a continuous opacity monitor (COM) or visible emissions monitoring is chosen as the monitoring option.

(c) *Thermal chip dryer*. On and after the date the initial performance test is conducted or required to be conducted, whichever date is earlier, the owner or operator of a thermal chip dryer must not discharge or cause to be discharged to the atmosphere emissions in excess of:

(1) 0.40 kilogram (kg) of THC, as propane, per megagram (Mg) (0.80 lb of THC, as propane, per ton) of feed/charge from a thermal chip dryer at a secondary aluminum production facility that is a major source; and

(2) 2.50 micrograms (μg) of D/F TEQ per Mg (3.5×10^{-5} gr per ton) of feed/charge from a thermal chip dryer at a secondary aluminum production facility that is a major or area source.

(d) *Scrap dryer/delacquering kiln/decoating kiln*. On and after the date the initial performance test is conducted or required to be conducted, whichever date is earlier:

(1) The owner or operator of a scrap dryer/delacquering kiln/decoating kiln

must not discharge or cause to be discharged to the atmosphere emissions in excess of:

(i) 0.03 kg of THC, as propane, per Mg (0.06 lb of THC, as propane, per ton) of feed/charge from a scrap dryer/delacquering kiln/decoating kiln at a secondary aluminum production facility that is a major source;

(ii) 0.04 kg of PM per Mg (0.08 lb per ton) of feed/charge from a scrap dryer/delacquering kiln/decoating kiln at a secondary aluminum production facility that is a major source;

(iii) 0.25 μg of D/F TEQ per Mg (3.5×10^{-6} gr of D/F TEQ per ton) of feed/charge from a scrap dryer/delacquering kiln/decoating kiln at a secondary aluminum production facility that is a major or area source; and

(iv) 0.40 kg of HCl per Mg (0.80 lb per ton) of feed/charge from a scrap dryer/delacquering kiln/decoating kiln at a secondary aluminum production facility that is a major source.

(2) The owner or operator of a scrap dryer/delacquering kiln/decoating kiln at a secondary aluminum production facility that is a major source must not discharge or cause to be discharged to the atmosphere visible emissions in excess of 10 percent opacity from any PM add-on air pollution control device if a COM is chosen as the monitoring option.

(e) *Scrap dryer/delacquering kiln/decoating kiln: alternative limits.* The owner or operator of a scrap dryer/delacquering kiln/decoating kiln may choose to comply with the emission limits in this paragraph as an alternative to the limits in paragraph (d) of this section if the scrap dryer/delacquering kiln/decoating kiln is equipped with an afterburner having a design residence time of at least 1 second and the afterburner is operated at a temperature of at least 750 °C (1400 °F) at all times. On and after the date the initial performance test is conducted or required to be conducted, whichever date is earlier:

(1) The owner or operator of a scrap dryer/delacquering kiln/decoating kiln must not discharge or cause to be discharged to the atmosphere emissions in excess of:

(i) 0.10 kg of THC, as propane, per Mg (0.20 lb of THC, as propane, per ton) of feed/charge from a scrap dryer/delacquering kiln/decoating kiln at a secondary aluminum production facility that is a major source;

(ii) 0.15 kg of PM per Mg (0.30 lb per ton) of feed/charge from a scrap dryer/delacquering kiln/decoating kiln at a secondary aluminum production facility that is a major source;

(iii) 5.0 μg of D/F TEQ per Mg (7.0×10^{-5} gr of D/F TEQ per ton) of feed/charge from a scrap dryer/delacquering kiln/decoating kiln at a secondary aluminum production facility that is a major or area source; and

(iv) 0.75 kg of HCl per Mg (1.50 lb per ton) of feed/charge from a scrap dryer/delacquering kiln/decoating kiln at a secondary aluminum production facility that is a major source.

(2) The owner or operator of a scrap dryer/ delacquering kiln/decoating kiln at a secondary aluminum production facility that is a major source must not discharge or cause to be discharged to the atmosphere visible emissions in excess of 10 percent opacity from any PM add-on air pollution control device if a COM is chosen as the monitoring option.

(f) *Sweat furnace.* The owner or operator of a sweat furnace shall comply with the emission standard of paragraph (f)(2) of this section.

(1) The owner or operator is not required to conduct a performance test to demonstrate compliance with the emission standard of paragraph (f)(2) of this section, provided that, on and after the compliance date of this rule, the owner or operator operates and maintains an afterburner with a design residence time of two seconds or greater and an operating temperature of 1600 °F or greater.

(2) On and after the date the initial performance test is conducted or required to be conducted, or if no compliance test is required, on and after the compliance date of this rule, whichever date is earlier, the owner or operator of a sweat furnace at a secondary aluminum production facility that is a major or area source must not discharge or cause to be discharged to the atmosphere emissions in excess of 0.80 nanogram (ng) of D/F TEQ per dscm (3.5×10^{-10} gr per dscf) at 11 percent oxygen (O_2).

(g) *Dross-only furnace*. On and after the date the initial performance test is conducted or required to be conducted, whichever date is earlier, the owner or operator of a dross-only furnace at a secondary aluminum production facility that is a major source must not discharge or cause to be discharged to the atmosphere:

(1) Emissions in excess of 0.15 kg of PM per Mg (0.30 lb of PM per ton) of feed/charge.

(2) Visible emissions in excess of 10 percent opacity from any PM add-on air pollution control device if a COM is chosen as the monitoring option.

(h) *Rotary dross cooler*. On and after the date the initial performance test is conducted or required to be conducted, whichever date is earlier, the owner or operator of a rotary dross cooler at a secondary aluminum production facility that is a major source must not discharge or cause to be discharged to the atmosphere:

(1) Emissions in excess of 0.09 g of PM per dscm (0.04 gr per dscf).

(2) Visible emissions in excess of 10 percent opacity from any PM add-on air pollution control device if a COM is chosen as the monitoring option.

(i) *Group 1 furnace*. The owner or operator of a group 1 furnace must use the limits in this paragraph to determine the emission standards for a SAPU.

(1) 0.20 kg of PM per Mg (0.40 lb of PM per ton) of feed/charge from a group 1 furnace, that is not a melting/holding furnace processing only clean charge, at a secondary aluminum production facility that is a major source;

(2) 0.40 kg of PM per Mg (0.80 lb of PM per ton) of feed/charge from a group 1 melting/holding furnace processing only clean charge at a secondary aluminum production facility that is a major source;

(3) 15 μg of D/F TEQ per Mg (2.1×10^{-4} gr of D/F TEQ per ton) of feed/charge from a group 1 furnace at a secondary aluminum production facility that is a major or area source. This limit does not apply if the furnace processes only clean charge; and

(4) 0.20 kg of HCl per Mg (0.40 lb of HCl per ton) of feed/charge or, if the furnace is equipped with an add-on air pollution control device, 10 percent of the uncontrolled HCl emissions, by weight, for a group 1 furnace at a secondary aluminum production facility that is a major source.

(5) The owner or operator of a group 1 furnace at a secondary aluminum production facility that is a major source must not discharge or cause to be discharged to the atmosphere visible emissions in excess of 10 percent opacity from any PM add-on air pollution control device if a COM is chosen as the monitoring option.

(6) The owner or operator may determine the emission standards for a SAPU by applying the group 1 furnace limits on the basis of the aluminum production weight in each group 1 furnace, rather than on the basis of feed/charge.

(7) The owner or operator of a sidewell group 1 furnace that conducts reactive fluxing (except for cover flux) in the hearth, or that conducts reactive fluxing in the sidewell at times when the level of molten metal falls below the top of the passage between the sidewell and the hearth, must comply with the emission limits of paragraphs (j)(1) through (j)(4) of this section on the basis of the combined emissions from the sidewell and the hearth.

(j) *In-line fluxer*. Except as provided in paragraph (j)(3) of this section for an in-line fluxer using no reactive flux material, the owner or operator of an in-line fluxer must use the limits in this paragraph to determine the emission standards for a SAPU.

(1) 0.02 kg of HCl per Mg (0.04 lb of HCl per ton) of feed/charge;

(2) 0.005 kg of PM per Mg (0.01 lb of PM per ton) of feed/charge.

(3) The emission limits in paragraphs (j)(1) and (j)(2) of this section do not apply to an in-line fluxer that uses no reactive flux materials.

(4) The owner or operator of an in-line fluxer at a secondary aluminum production facility that is a major source must not discharge or cause to be discharged to the atmosphere visible emissions in excess of 10 percent opacity from any PM add-on air pollution control device used to control emissions from the in-line fluxer, if a COM is chosen as the monitoring option.

(5) The owner or operator may determine the emission standards for a

SAPU by applying the in-line fluxer limits on the basis of the aluminum production weight in each in-line fluxer, rather than on the basis of feed/charge.

(k) *Secondary aluminum processing unit*. On and after the date of approval of the operation, maintenance and monitoring (OM&M) plan, the owner or operator must comply with the emission limits calculated using the equations for PM and HCl in paragraphs (k)(1) and (k)(2) of this section for each secondary aluminum processing unit at a secondary aluminum production facility that is a major source. The owner or operator must comply with the emission limit calculated using the equation for D/F in paragraph (k)(3) of this section for each secondary aluminum processing unit at a secondary aluminum production facility that is a major or area source.

(1) The owner or operator must not discharge or allow to be discharged to the atmosphere any 3-day, 24-hour rolling average emissions of PM in excess of:

$$L_{C_{PM}} = \frac{\sum_{i=1}^{n}\left(L_{ti_{PM}} \times T_{ti}\right)}{\sum_{i=1}^{n}\left(T_{ti}\right)} \qquad \text{(Eq. 1)}$$

Where,

L_{tiPM} = The PM emission limit for individual emission unit i in paragraph (i)(1) and (2) of this section for a group 1 furnace or in paragraph (j)(2) of this section for an in-line fluxer;

T_{ti} = The feed/charge rate for individual emission unit I; and

L_{cPM} = The PM emission limit for the secondary aluminum processing unit.

NOTE: In-line fluxers using no reactive flux materials cannot be included in this calculation since they are not subject to the PM limit.

(2) The owner or operator must not discharge or allow to be discharged to the atmosphere any 3-day, 24-hour rolling average emissions of HCl in excess of:

$$L_{Cl_{HCl}} = \frac{\sum_{i=1}^{n}\left(L_{ti_{HCl}} \times T_{ti}\right)}{\sum_{i=1}^{n}\left(T_{ti}\right)} \qquad \text{(Eq. 2)}$$

Where,

L_{tiHCl} = The HCl emission limit for individual emission unit i in paragraph (i)(4) of this section for a group 1 furnace or in paragraph (j)(1) of this section for an in-line fluxer; and

L_{cHCl} = The HCl emission limit for the secondary aluminum processing unit.

NOTE: In-line fluxers using no reactive flux materials cannot be included in this calculation since they are not subject to the HCl limit.

(3) The owner or operator must not discharge or allow to be discharged to the atmosphere any 3-day, 24-hour rolling average emissions of D/F in excess of:

$$L_{C_{D/F}} = \frac{\sum_{i=1}^{n}\left(L_{ti_{D/F}} \times T_{ti}\right)}{\sum_{i=1}^{n}\left(T_{ti}\right)} \qquad \text{(Eq. 3)}$$

Where,

$L_{tiD/F}$ = The D/F emission limit for individual emission unit i in paragraph (i)(3) of this section for a group 1 furnace; and

$L_{cD/F}$ = The D/F emission limit for the secondary aluminum processing unit.

NOTE: Clean charge furnaces cannot be included in this calculation since they are not subject to the D/F limit.

(4) The owner or operator of a SAPU at a secondary aluminum production facility that is a major source may demonstrate compliance with the emission limits of paragraphs (k)(1) through (3) of this section by demonstrating that each emission unit within the SAPU is in compliance with the applicable emission limits of paragraphs (i) and (j) of this section.

(5) The owner or operator of a SAPU at a secondary aluminum production facility that is an area source may demonstrate compliance with the emission limits of paragraph (k)(3) of this section by demonstrating that each

emission unit within the SAPU is in compliance with the emission limit of paragraph (i)(3) of this section.

EFFECTIVE DATE NOTE: At 67 FR 41123, June 14, 2002, § 63.1505 was amended by revising the introductory text of paragraphs (b), (c), (d), and (e), paragraph (f)(2), and the introductory text of paragraphs (g), (h), and (k) effective August 13, 2002. For the convenience of the user the revised text is set forth as follows:

§ 63.1505 Emission standards for affected sources and emission units.

* * * * *

(b) *Aluminum scrap shredder*. On and after the compliance date established by § 63.1501, the owner or operator of an aluminum scrap shredder at a secondary aluminum production facility that is a major source must not discharge or cause to be discharged to the atmosphere:

* * * * *

(c) *Thermal chip dryer*. On and after the compliance date established by § 63.1501, the owner or operator of a thermal chip dryer must not discharge or cause to be discharged to the atmosphere emissions in excess of:

* * * * *

(d) *Scrap dryer/delacquering kiln/decoating kiln*. On and after the compliance date established by § 63.1501:

* * * * *

(e) *Scrap dryer/delacquering kiln/decoating kiln: alternative limits*. The owner or operator of a scrap dryer/ delacquering kiln/decoating kiln may choose to comply with the emission limits in this paragraph as an alternative to the limits in paragraph (d) of this section if the scrap dryer/delacquering kiln/ decoating kiln is equipped with an afterburner having a design residence time of at least 1 second and the afterburner is operated at a temperature of at least 750 °C (1400 °F) at all times. On and after the compliance date established by § 63.1501:

* * * * *

(f) *Sweat furnace*. * * *

(2) On and after the compliance date established by § 63.1501, the owner or operator of a sweat furnace at a secondary aluminum production facility that is a major or area source must not discharge or cause to be discharged to the atmosphere emissions in excess of 0.80 nanogram (ng) of D/F TEQ per dscm (3.5×10^{-10} gr per dscf) at 11 percent oxygen (O_2).

(g) *Dross-only furnace*. On and after the compliance date established by § 63.1501, the owner or operator of a dross-only furnace at a secondary aluminum production facility that is a major source must not discharge or cause to be discharged to the atmosphere:

* * * * *

(h) *Rotary dross cooler*. On and after the compliance date established by § 63.1501, the owner or operator of a rotary dross cooler at a secondary aluminum production facility that is a major source must not discharge or cause to be discharged to the atmosphere:

* * * * *

(k) *Secondary aluminum processing unit*. On and after the compliance date established by § 63.1501, the owner or operator must comply with the emission limits calculated using the equations for PM and HCl in paragraphs (k)(1) and (2) of this section for each secondary aluminum processing unit at a secondary aluminum production facility that is a major source. The owner or operator must comply with the emission limit calculated using the equation for D/F in paragraph (k)(3) of this section for each secondary aluminum processing unit at a secondary aluminum production facility that is a major or area source.

§ 63.1506 Operating requirements.

(a) *Summary*. (1) On and after the date on which the initial performance test is conducted or required to be conducted, whichever date is earlier, the owner or operator must operate all new and existing affected sources and control equipment according to the requirements in this section.

(2) The completion of the initial performance tests for SAPUs shall be considered to be the date of approval of the OM&M plan by the permitting authority.

(3) The owner or operator of an existing sweat furnace that meets the specifications of § 63.1505(f)(1) must operate the sweat furnace and control equipment according to the requirements of this section on and after the compliance date of this standard.

(4) The owner or operator of a new sweat furnace that meets the specifications of § 63.1505(f)(1) must operate the sweat furnace and control equipment according to the requirements of this

section by March 23, 2000 or upon startup, whichever is later.

(5) Operating requirements are summarized in Table 2 to this subpart.

(b) *Labeling*. The owner or operator must provide and maintain easily visible labels posted at each group 1 furnace, group 2 furnace, in-line fluxer and scrap dryer/delacquering kiln/decoating kiln that identifies the applicable emission limits and means of compliance, including:

(1) The type of affected source or emission unit (*e.g.*, scrap dryer/delacquering kiln/decoating kiln, group 1 furnace, group 2 furnace, in-line fluxer).

(2) The applicable operational standard(s) and control method(s) (work practice or control device). This includes, but is not limited to, the type of charge to be used for a furnace (*e.g.*, clean scrap only, all scrap, etc.), flux materials and addition practices, and the applicable operating parameter ranges and requirements as incorporated in the OM&M plan.

(3) The afterburner operating temperature and design residence time for a scrap dryer/delacquering kiln/decoating kiln.

(c) *Capture/collection systems*. For each affected source or emission unit equipped with an add-on air pollution control device, the owner or operator must:

(1) Design and install a system for the capture and collection of emissions to meet the engineering standards for minimum exhaust rates as published by the American Conference of Governmental Industrial Hygienists in chapters 3 and 5 of ''Industrial Ventilation: A Manual of Recommended Practice'' (incorporated by reference in § 63.1502 of this subpart);

(2) Vent captured emissions through a closed system, except that dilution air may be added to emission streams for the purpose of controlling temperature at the inlet to a fabric filter; and

(3) Operate each capture/collection system according to the procedures and requirements in the OM&M plan.

(d) *Feed/charge weight*. The owner or operator of each affected source or emission unit subject to an emission limit in kg/Mg (lb/ton) of feed/charge must:

(1) Except as provided in paragraph (d)(3) of this section, install and operate a device that measures and records or otherwise determine the weight of feed/charge (or throughput) for each operating cycle or time period used in the performance test; and

(2) Operate each weight measurement system or other weight determination procedure in accordance with the OM&M plan.

(3) The owner or operator may chose to measure and record aluminum production weight from an affected source or emission unit rather than feed/charge weight to an affected source or emission unit, provided that:

(i) The aluminum production weight, rather than feed/charge weight is measured and recorded for all emission units within a SAPU; and

(ii) All calculations to demonstrate compliance with the emission limits for SAPUs are based on aluminum production weight rather than feed/charge weight.

(e) *Aluminum scrap shredder*. The owner or operator of a scrap shredder with emissions controlled by a fabric filter must operate a bag leak detection system, or a continuous opacity monitor, or conduct visible emissions observations.

(1) If a bag leak detection system is used to meet the monitoring requirements in § 63.1510, the owner or operator must:

(i) Initiate corrective action within 1-hour of a bag leak detection system alarm and complete the corrective action procedures in accordance with the OM&M plan.

(ii) Operate each fabric filter system such that the bag leak detection system alarm does not sound more than 5 percent of the operating time during a 6-month block reporting period. In calculating this operating time fraction, if inspection of the fabric filter demonstrates that no corrective action is required, no alarm time is counted. If corrective action is required, each alarm shall be counted as a minimum of 1 hour. If the owner or operator takes longer than 1 hour to initiate corrective action, the alarm time shall be counted as the actual amount of time taken by the owner or operator to initiate corrective action.

(2) If a continuous opacity monitoring system is used to meet the monitoring requirements in §63.1510, the owner or operator must initiate corrective action within 1-hour of any 6-minute average reading of 5 percent or more opacity and complete the corrective action procedures in accordance with the OM&M plan.

(3) If visible emission observations are used to meet the monitoring requirements in §63.1510, the owner or operator must initiate corrective action within 1-hour of any observation of visible emissions during a daily visible emissions test and complete the corrective action procedures in accordance with the OM&M plan.

(f) *Thermal chip dryer*. The owner or operator of a thermal chip dryer with emissions controlled by an afterburner must:

(1) Maintain the 3-hour block average operating temperature of each afterburner at or above the average temperature established during the performance test.

(2) Operate each afterburner in accordance with the OM&M plan.

(3) Operate each thermal chip dryer using only unpainted aluminum chips as the feedstock.

(g) *Scrap dryer/delacquering kiln/decoating kiln*. The owner or operator of a scrap dryer/delacquering kiln/decoating kiln with emissions controlled by an afterburner and a lime-injected fabric filter must:

(1) For each afterburner,

(i) Maintain the 3-hour block average operating temperature of each afterburner at or above the average temperature established during the performance test.

(ii) Operate each afterburner in accordance with the OM&M plan.

(2) If a bag leak detection system is used to meet the fabric filter monitoring requirements in §63.1510,

(i) Initiate corrective action within 1-hour of a bag leak detection system alarm and complete any necessary corrective action procedures in accordance with the OM&M plan.

(ii) Operate each fabric filter system such that the bag leak detection system alarm does not sound more than 5 percent of the operating time during a 6-month block reporting period. In calculating this operating time fraction, if inspection of the fabric filter demonstrates that no corrective action is required, no alarm time is counted. If corrective action is required, each alarm shall be counted as a minimum of 1 hour. If the owner or operator takes longer than 1 hour to initiate corrective action, the alarm time shall be counted as the actual amount of time taken by the owner or operator to initiate corrective action.

(3) If a continuous opacity monitoring system is used to meet the monitoring requirements in §63.1510, initiate corrective action within 1-hour of any 6-minute average reading of 5 percent or more opacity and complete the corrective action procedures in accordance with the OM&M plan.

(4) Maintain the 3-hour block average inlet temperature for each fabric filter at or below the average temperature established during the performance test, plus 14 °C (plus 25 °F).

(5) For a continuous injection device, maintain free-flowing lime in the hopper to the feed device at all times and maintain the lime feeder setting at the same level established during the performance test.

(h) *Sweat furnace*. The owner or operator of a sweat furnace with emissions controlled by an afterburner must:

(1) Maintain the 3-hour block average operating temperature of each afterburner at or above:

(i) The average temperature established during the performance test; or

(ii) 1600 °F if a performance test was not conducted, and the afterburner meets the specifications of §63.1505(f)(1).

(2) Operate each afterburner in accordance with the OM&M plan.

(i) *Dross-only furnace*. The owner or operator of a dross-only furnace with emissions controlled by a fabric filter must:

(1) If a bag leak detection system is used to meet the monitoring requirements in §63.1510,

(i) Initiate corrective action within 1-hour of a bag leak detection system alarm and complete the corrective action procedures in accordance with the OM&M plan.

(ii) Operate each fabric filter system such that the bag leak detection system alarm does not sound more than 5 percent of the operating time during a 6-month block reporting period. In calculating this operating time fraction, if inspection of the fabric filter demonstrates that no corrective action is required, no alarm time is counted. If corrective action is required, each alarm shall be counted as a minimum of 1 hour. If the owner or operator takes longer than 1 hour to initiate corrective action, the alarm time shall be counted as the actual amount of time taken by the owner or operator to initiate corrective action.

(2) If a continuous opacity monitoring system is used to meet the monitoring requirements in § 63.1510, initiate corrective action within 1-hour of any 6-minute average reading of 5 percent or more opacity and complete the corrective action procedures in accordance with the OM&M plan.

(3) Operate each furnace using dross as the sole feedstock.

(j) *Rotary dross cooler*. The owner or operator of a rotary dross cooler with emissions controlled by a fabric filter must:

(1) If a bag leak detection system is used to meet the monitoring requirements in § 63.1510,

(i) Initiate corrective action within 1-hour of a bag leak detection system alarm and complete the corrective action procedures in accordance with the OM&M plan.

(ii) Operate each fabric filter system such that the bag leak detection system alarm does not sound more than 5 percent of the operating time during a 6-month block reporting period. In calculating this operating time fraction, if inspection of the fabric filter demonstrates that no corrective action is required, no alarm time is counted. If corrective action is required, each alarm shall be counted as a minimum of 1 hour. If the owner or operator takes longer than 1 hour to initiate corrective action, the alarm time shall be counted as the actual amount of time taken by the owner or operator to initiate corrective action.

(2) If a continuous opacity monitoring system is used to meet the monitoring requirements in § 63.1510, initiate corrective action within 1 hour of any 6-minute average reading of 5 percent or more opacity and complete the corrective action procedures in accordance with the OM&M plan.

(k) *In-line fluxer*. The owner or operator of an in-line fluxer with emissions controlled by a lime-injected fabric filter must:

(1) If a bag leak detection system is used to meet the monitoring requirements in § 63.1510,

(i) Initiate corrective action within 1-hour of a bag leak detection system alarm and complete the corrective action procedures in accordance with the OM&M plan.

(ii) Operate each fabric filter system such that the bag leak detection system alarm does not sound more than 5 percent of the operating time during a 6-month block reporting period. In calculating this operating time fraction, if inspection of the fabric filter demonstrates that no corrective action is required, no alarm time is counted. If corrective action is required, each alarm shall be counted as a minimum of 1 hour. If the owner or operator takes longer than 1 hour to initiate corrective action, the alarm time shall be counted as the actual amount of time taken by the owner or operator to initiate corrective action.

(2) If a continuous opacity monitoring system is used to meet the monitoring requirements in § 63.1510, initiate corrective action within 1 hour of any 6-minute average reading of 5 percent or more opacity and complete the corrective action procedures in accordance with the OM&M plan.

(3) For a continuous injection system, maintain free-flowing lime in the hopper to the feed device at all times and maintain the lime feeder setting at the same level established during the performance test.

(4) Maintain the total reactive chlorine flux injection rate for each operating cycle or time period used in the performance test at or below the average rate established during the performance test.

(l) *In-line fluxer using no reactive flux material*. The owner or operator of a new or existing in-line fluxer using no reactive flux materials must operate

each in-line fluxer using no reactive flux materials.

(m) *Group 1 furnace with add-on air pollution control devices.* The owner or operator of a group 1 furnace with emissions controlled by a lime-injected fabric filter must:

(1) If a bag leak detection system is used to meet the monitoring requirements in §63.1510, the owner or operator must:

(i) Initiate corrective action within 1 hour of a bag leak detection system alarm.

(ii) Complete the corrective action procedures in accordance with the OM&M plan.

(iii) Operate each fabric filter system such that the bag leak detection system alarm does not sound more than 5 percent of the operating time during a 6-month block reporting period. In calculating this operating time fraction, if inspection of the fabric filter demonstrates that no corrective action is required, no alarm time is counted. If corrective action is required, each alarm shall be counted as a minimum of 1 hour. If the owner or operator takes longer than 1 hour to initiate corrective action, the alarm time shall be counted as the actual amount of time taken by the owner or operator to initiate corrective action.

(2) If a continuous opacity monitoring system is used to meet the monitoring requirements in §63.1510, the owner or operator must:

(i) Initiate corrective action within 1 hour of any 6-minute average reading of 5 percent or more opacity; and

(ii) Complete the corrective action procedures in accordance with the OM&M plan.

(3) Maintain the 3-hour block average inlet temperature for each fabric filter at or below the average temperature established during the performance test, plus 14 °C (plus 25 °F).

(4) For a continuous lime injection system, maintain free-flowing lime in the hopper to the feed device at all times and maintain the lime feeder setting at the same level established during the performance test.

(5) Maintain the total reactive chlorine flux injection rate for each operating cycle or time period used in the performance test at or below the average rate established during the performance test.

(6) Operate each sidewell furnace such that:

(i) The level of molten metal remains above the top of the passage between the side-well and hearth during reactive flux injection, unless the hearth also is equipped with an add-on control device.

(ii) Reactive flux is added only in the sidewell unless the hearth also is equipped with an add-on control device.

(n) *Group 1 furnace without add-on air pollution control devices.* The owner or operator of a group 1 furnace (including a group 1 furnace that is part of a secondary aluminum processing unit) without add-on air pollution control devices must:

(1) Maintain the total reactive chlorine flux injection rate for each operating cycle or time period used in the performance test at or below the average rate established during the performance test.

(2) Operate each furnace in accordance with the work practice/pollution prevention measures documented in the OM&M plan and within the parameter values or ranges established in the OM&M plan.

(3) Operate each group 1 melting/holding furnace subject to the emission standards in §63.1505(i)(2) using only clean charge as the feedstock.

(o) *Group 2 furnace.* The owner or operator of a new or existing group 2 furnace must:

(1) Operate each furnace using only clean charge as the feedstock.

(2) Operate each furnace using no reactive flux.

(p) *Corrective action.* When a process parameter or add-on air pollution control device operating parameter deviates from the value or range established during the performance test and incorporated in the OM&M plan, the owner or operator must initiate corrective action. Corrective action must restore operation of the affected source or emission unit (including the process or control device) to its normal or usual mode of operation as expeditiously as practicable in accordance with good air pollution control practices for minimizing emissions. Corrective actions taken must include follow-

up actions necessary to return the process or control device parameter level(s) to the value or range of values established during the performance test and steps to prevent the likely recurrence of the cause of a deviation.

EFFECTIVE DATE NOTE: At 67 FR 41123, June 14, 2002, § 63.1506 was amended by revising paragraph (a)(1) effective August 13, 2002. For the convenience of the user the revised text is set forth as follows:

§ 63.1506 Operating requirements.

(a) *Summary*. (1) On and after the compliance date established by § 63.1501, the owner or operator must operate all new and existing affected sources and control equipment according to the requirements in this section.

* * * * *

§§ 63.1507–63.1509 [Reserved]

MONITORING AND COMPLIANCE REQUIREMENTS

§ 63.1510 Monitoring requirements.

(a) *Summary*. On and after the date the initial performance test is completed or required to be completed, whichever date is earlier, the owner or operator of a new or existing affected source or emission unit must monitor all control equipment and processes according to the requirements in this section. Monitoring requirements for each type of affected source and emission unit are summarized in Table 3 to this subpart.

(b) *Operation, maintenance, and monitoring (OM&M) plan*. The owner or operator must prepare and implement for each new or existing affected source and emission unit, a written operation, maintenance, and monitoring (OM&M) plan. The owner or operator must submit the plan to the applicable permitting authority for review and approval as part of the application for a part 70 or part 71 permit. Any subsequent changes to the plan must be submitted to the applicable permitting authority for review and approval. Pending approval by the applicable permitting authority of an initial or amended plan, the owner or operator must comply with the provisions of the submitted plan. Each plan must contain the following information:

(1) Process and control device parameters to be monitored to determine compliance, along with established operating levels or ranges, as applicable, for each process and control device.

(2) A monitoring schedule for each affected source and emission unit.

(3) Procedures for the proper operation and maintenance of each process unit and add-on control device used to meet the applicable emission limits or standards in § 63.1505.

(4) Procedures for the proper operation and maintenance of monitoring devices or systems used to determine compliance, including:

(i) Calibration and certification of accuracy of each monitoring device, at least once every 6 months, according to the manufacturer's instructions; and

(ii) Procedures for the quality control and quality assurance of continuous emission or opacity monitoring systems as required by the general provisions in subpart A of this part.

(5) Procedures for monitoring process and control device parameters, including procedures for annual inspections of afterburners, and if applicable, the procedure to be used for determining charge/feed (or throughput) weight if a measurement device is not used.

(6) Corrective actions to be taken when process or operating parameters or add-on control device parameters deviate from the value or range established in paragraph (b)(1) of this section, including:

(i) Procedures to determine and record the cause of an deviation or excursion, and the time the deviation or excursion began and ended; and

(ii) Procedures for recording the corrective action taken, the time corrective action was initiated, and the time/date corrective action was completed.

(7) A maintenance schedule for each process and control device that is consistent with the manufacturer's instructions and recommendations for routine and long-term maintenance.

(8) Documentation of the work practice and pollution prevention measures used to achieve compliance with the applicable emission limits and a site-specific monitoring plan as required in paragraph (o) of this section for each group 1 furnace not equipped with an add-on air pollution control device.

(c) *Labeling.* The owner or operator must inspect the labels for each group 1 furnace, group 2 furnace, in-line fluxer and scrap dryer/delacquering kiln/decoating kiln at least once per calendar month to confirm that posted labels as required by the operational standard in §63.1506(b) are intact and legible.

(d) *Capture/collection system.* The owner or operator must:

(1) Install, operate, and maintain a capture/collection system for each affected source and emission unit equipped with an add-on air pollution control device; and

(2) Inspect each capture/collection and closed vent system at least once each calendar year to ensure that each system is operating in accordance with the operating requirements in §63.1506(c) and record the results of each inspection.

(e) *Feed/charge weight.* The owner or operator of an affected source or emission unit subject to an emission limit in kg/Mg (lb/ton) or μg/Mg (gr/ton) of feed/charge must install, calibrate, operate, and maintain a device to measure and record the total weight of feed/charge to, or the aluminum production from, the affected source or emission unit over the same operating cycle or time period used in the performance test. Feed/charge or aluminum production within SAPUs must be measured and recorded on an emission unit-by-emission unit basis. As an alternative to a measurement device, the owner or operator may use a procedure acceptable to the applicable permitting authority to determine the total weight of feed/charge or aluminum production to the affected source or emission unit.

(1) The accuracy of the weight measurement device or procedure must be ±1 percent of the weight being measured. The owner or operator may apply to the permitting agency for approval to use a device of alternative accuracy if the required accuracy cannot be achieved as a result of equipment layout or charging practices. A device of alternative accuracy will not be approved unless the owner or operator provides assurance through data and information that the affected source will meet the relevant emission standard.

(2) The owner or operator must verify the calibration of the weight measurement device in accordance with the schedule specified by the manufacturer, or if no calibration schedule is specified, at least once every 6 months.

(f) *Fabric filters and lime-injected fabric filters.* The owner or operator of an affected source or emission unit using a fabric filter or lime-injected fabric filter to comply with the requirements of this subpart must install, calibrate, maintain, and continuously operate a bag leak detection system as required in paragraph (f)(1) of this section or a continuous opacity monitoring system as required in paragraph (f)(2) of this section. The owner or operator of an aluminum scrap shredder must install and operate a bag leak detection system as required in paragraph (f)(1) of this section, install and operate a continuous opacity monitoring system as required in paragraph (f)(2) of this section, or conduct visible emission observations as required in paragraph (f)(3) of this section.

(1) These requirements apply to the owner or operator of a new or existing affected source or existing emission unit using a bag leak detection system.

(i) The owner or operator must install and operate a bag leak detection system for each exhaust stack of a fabric filter.

(ii) Each triboelectric bag leak detection system must be installed, calibrated, operated, and maintained according to the ''Fabric Filter Bag Leak Detection Guidance,'' (September 1997). This document is available from the U.S. Environmental Protection Agency; Office of Air Quality Planning and Standards; Emissions, Monitoring and Analysis Division; Emission Measurement Center (MD–19), Research Triangle Park, NC 27711. This document also is available on the Technology Transfer Network (TTN) under Emission Measurement Technical Information (EMTIC), Continuous Emission Monitoring. Other bag leak detection systems must be installed, operated, calibrated, and maintained in a manner consistent with the manufacturer's written specifications and recommendations.

(iii) The bag leak detection system must be certified by the manufacturer

to be capable of detecting PM emissions at concentrations of 10 milligrams per actual cubic meter (0.0044 grains per actual cubic foot) or less.

(iv) The bag leak detection system sensor must provide output of relative or absolute PM loadings.

(v) The bag leak detection system must be equipped with a device to continuously record the output signal from the sensor.

(vi) The bag leak detection system must be equipped with an alarm system that will sound automatically when an increase in relative PM emissions over a preset level is detected. The alarm must be located where it is easily heard by plant operating personnel.

(vii) For positive pressure fabric filter systems, a bag leak detection system must be installed in each baghouse compartment or cell. For negative pressure or induced air fabric filters, the bag leak detector must be installed downstream of the fabric filter.

(viii) Where multiple detectors are required, the system's instrumentation and alarm may be shared among detectors.

(ix) The baseline output must be established by adjusting the range and the averaging period of the device and establishing the alarm set points and the alarm delay time.

(x) Following initial adjustment of the system, the owner or operator must not adjust the sensitivity or range, averaging period, alarm set points, or alarm delay time except as detailed in the OM&M plan. In no case may the sensitivity be increased by more than 100 percent or decreased more than 50 percent over a 365-day period unless such adjustment follows a complete fabric filter inspection which demonstrates that the fabric filter is in good operating condition.

(2) These requirements apply to the owner or operator of a new or existing affected source or an existing emission unit using a continuous opacity monitoring system.

(i) The owner or operator must install, calibrate, maintain, and operate a continuous opacity monitoring system to measure and record the opacity of emissions exiting each exhaust stack.

(ii) Each continuous opacity monitoring system must meet the design and installation requirements of Performance Specification 1 in appendix B to 40 CFR part 60.

(3) These requirements apply to the owner or operator of a new or existing aluminum scrap shredder who conducts visible emission observations. The owner or operator must:

(i) Perform a visible emissions test for each aluminum scrap shredder using a certified observer at least once a day according to the requirements of Method 9 in appendix A to 40 CFR part 60. Each Method 9 test must consist of five 6-minute observations in a 30-minute period; and

(ii) Record the results of each test.

(g) *Afterburner*. These requirements apply to the owner or operator of an affected source using an afterburner to comply with the requirements of this subpart.

(1) The owner or operator must install, calibrate, maintain, and operate a device to continuously monitor and record the operating temperature of the afterburner consistent with the requirements for continuous monitoring systems in subpart A of this part.

(2) The temperature monitoring device must meet each of these performance and equipment specifications:

(i) The temperature monitoring device must be installed at the exit of the combustion zone of each afterburner.

(ii) The monitoring system must record the temperature in 15-minute block averages and determine and record the average temperature for each 3-hour block period.

(iii) The recorder response range must include zero and 1.5 times the average temperature established according to the requirements in § 63.1512(m).

(iv) The reference method must be a National Institute of Standards and Technology calibrated reference thermocouple-potentiometer system or alternate reference, subject to approval by the Administrator.

(3) The owner or operator must conduct an inspection of each afterburner at least once a year and record the results. At a minimum, an inspection must include:

(i) Inspection of all burners, pilot assemblies, and pilot sensing devices for

proper operation and clean pilot sensor;

(ii) Inspection for proper adjustment of combustion air;

(iii) Inspection of internal structures (*e.g.*, baffles) to ensure structural integrity;

(iv) Inspection of dampers, fans, and blowers for proper operation;

(v) Inspection for proper sealing;

(vi) Inspection of motors for proper operation;

(vii) Inspection of combustion chamber refractory lining and clean and replace lining as necessary;

(viii) Inspection of afterburner shell for corrosion and/or hot spots;

(ix) Documentation, for the burn cycle that follows the inspection, that the afterburner is operating properly and any necessary adjustments have been made; and

(x) Verification that the equipment is maintained in good operating condition.

(xi) Following an equipment inspection, all necessary repairs must be completed in accordance with the requirements of the OM&M plan.

(h) *Fabric filter inlet temperature*. These requirements apply to the owner or operator of a scrap dryer/delacquering kiln/decoating kiln or a group 1 furnace using a lime-injected fabric filter to comply with the requirements of this subpart.

(1) The owner or operator must install, calibrate, maintain, and operate a device to continuously monitor and record the temperature of the fabric filter inlet gases consistent with the requirements for continuous monitoring systems in subpart A of this part.

(2) The temperature monitoring device must meet each of these performance and equipment specifications:

(i) The monitoring system must record the temperature in 15-minute block averages and calculate and record the average temperature for each 3-hour block period.

(ii) The recorder response range must include zero and 1.5 times the average temperature established according to the requirements in §63.1512(n).

(iii) The reference method must be a National Institute of Standards and Technology calibrated reference thermocouple-potentiometer system or alternate reference, subject to approval by the Administrator.

(i) *Lime injection*. These requirements apply to the owner or operator of an affected source or emission unit using a lime-injected fabric filter to comply with the requirements of this subpart.

(1) The owner or operator of a continuous lime injection system must verify that lime is always free-flowing by either:

(i) Inspecting each feed hopper or silo at least once each 8-hour period and recording the results of each inspection. If lime is found not to be free-flowing during any of the 8-hour periods, the owner or operator must increase the frequency of inspections to at least once every 4-hour period for the next 3 days. The owner or operator may return to inspections at least once every 8 hour period if corrective action results in no further blockages of lime during the 3-day period; or

(ii) Subject to the approval of the permitting agency, installing, operating and maintaining a load cell, carrier gas/lime flow indicator, carrier gas pressure drop measurement system or other system to confirm that lime is free-flowing. If lime is found not to be free-flowing, the owner or operator must promptly initiate and complete corrective action, or

(iii) Subject to the approval of the permitting agency, installing, operating and maintaining a device to monitor the concentration of HCl at the outlet of the fabric filter. If an increase in the concentration of HCl indicates that the lime is not free-flowing, the owner or operator must promptly initiate and complete corrective action.

(2) The owner or operator of a continuous lime injection system must record the lime feeder setting once each day of operation.

(3) An owner or operator who intermittently adds lime to a lime coated fabric filter must obtain approval from the permitting authority for a lime addition monitoring procedure. The permitting authority will not approve a monitoring procedure unless data and information are submitted establishing that the procedure is adequate to ensure that relevant emission standards will be met on a continuous basis.

(j) *Total reactive flux injection rate.* These requirements apply to the owner or operator of a group 1 furnace (with or without add-on air pollution control devices) or in-line fluxer. The owner or operator must:

(1) Install, calibrate, operate, and maintain a device to continuously measure and record the weight of gaseous or liquid reactive flux injected to each affected source or emission unit.

(i) The monitoring system must record the weight for each 15-minute block period, during which reactive fluxing occurs, over the same operating cycle or time period used in the performance test.

(ii) The accuracy of the weight measurement device must be ±1 percent of the weight of the reactive component of the flux being measured. The owner or operator may apply to the permitting authority for permission to use a weight measurement device of alternative accuracy in cases where the reactive flux flow rates are so low as to make the use of a weight measurement device of ±1 percent impracticable. A device of alternative accuracy will not be approved unless the owner or operator provides assurance through data and information that the affected source will meet the relevant emission standards.

(iii) The owner or operator must verify the calibration of the weight measurement device in accordance with the schedule specified by the manufacturer, or if no calibration schedule is specified, at least once every 6 months.

(2) Calculate and record the gaseous or liquid reactive flux injection rate (kg/Mg or lb/ton) for each operating cycle or time period used in the performance test using the procedure in § 63.1512(o).

(3) Record, for each 15-minute block period during each operating cycle or time period used in the performance test during which reactive fluxing occurs, the time, weight, and type of flux for each addition of:

(i) Gaseous or liquid reactive flux other than chlorine; and

(ii) Solid reactive flux.

(4) Calculate and record the total reactive flux injection rate for each operating cycle or time period used in the performance test using the procedure in § 63.1512(o).

(5) The owner or operator of a group 1 furnace or in-line fluxer performing reactive fluxing may apply to the Administrator for approval of an alternative method for monitoring and recording the total reactive flux addition rate based on monitoring the weight or quantity of reactive flux per ton of feed/charge for each operating cycle or time period used in the performance test. An alternative monitoring method will not be approved unless the owner or operator provides assurance through data and information that the affected source will meet the relevant emission standards on a continuous basis.

(k) *Thermal chip dryer.* These requirements apply to the owner or operator of a thermal chip dryer with emissions controlled by an afterburner. The owner or operator must:

(1) Record the type of materials charged to the unit for each operating cycle or time period used in the performance test.

(2) Submit a certification of compliance with the applicable operational standard for charge materials in § 63.1506(f)(3) for each 6-month reporting period. Each certification must contain the information in § 63.1516(b)(2)(i).

(l) *Dross-only furnace.* These requirements apply to the owner or operator of a dross-only furnace. The owner or operator must:

(1) Record the materials charged to each unit for each operating cycle or time period used in the performance test.

(2) Submit a certification of compliance with the applicable operational standard for charge materials in § 63.1506(i)(3) for each 6-month reporting period. Each certification must contain the information in § 63.1516(b)(2)(ii).

(m) *In-line fluxers using no reactive flux.* The owner or operator of an in-line fluxer that uses no reactive flux materials must submit a certification of compliance with the operational standard for no reactive flux materials in § 63.1506(l) for each 6-month reporting period. Each certification must contain the information in § 63.1516(b)(2)(vi).

(n) *Sidewell group 1 furnace with add-on air pollution control devices.* These requirements apply to the owner or operator of a sidewell group 1 furnace using add-on air pollution control devices. The owner or operator must:

(1) Record in an operating log for each charge of a sidewell furnace that the level of molten metal was above the top of the passage between the sidewell and hearth during reactive flux injection, unless the furnace hearth was also equipped with an add-on control device.

(2) Submit a certification of compliance with the operational standards in §63.1506(m)(7) for each 6-month reporting period. Each certification must contain the information in §63.1516(b)(2)(iii).

(o) *Group 1 furnace without add-on air pollution control devices.* These requirements apply to the owner or operator of a group 1 furnace that is not equipped with an add-on air pollution control device.

(1) The owner or operator must develop, in consultation with the applicable permitting authority, a written site-specific monitoring plan. The site-specific monitoring plan must be part of the OM&M plan that addresses monitoring and compliance requirements for PM, HCl, and D/F emissions.

(i) The owner or operator of an existing affected source must submit the site-specific monitoring plan to the applicable permitting authority for review at least 6 months prior to the compliance date.

(ii) The permitting authority will review and approve or disapprove a proposed plan, or request changes to a plan, based on whether the plan contains sufficient provisions to ensure continuing compliance with applicable emission limits and demonstrates, based on documented test results, the relationship between emissions of PM, HCl, and D/F and the proposed monitoring parameters for each pollutant. Test data must establish the highest level of PM, HCl, and D/F that will be emitted from the furnace. Subject to permitting agency approval of the OM&M plan, this may be determined by conducting performance tests and monitoring operating parameters while charging the furnace with feed/charge materials containing the highest anticipated levels of oils and coatings and fluxing at the highest anticipated rate.

(2) Each site-specific monitoring plan must document each work practice, equipment/design practice, pollution prevention practice, or other measure used to meet the applicable emission standards.

(3) Each site-specific monitoring plan must include provisions for unit labeling as required in paragraph (c) of this section, feed/charge weight measurement (or production weight measurement) as required in paragraph (e) of this section and flux weight measurement as required in paragraph (j) of this section.

(4) Each site-specific monitoring plan for a melting/holding furnace subject to the clean charge emission standard in §63.1505(i)(3) must include these requirements:

(i) The owner or operator must record the type of feed/ charge (*e.g.*, ingot, thermally dried chips, dried scrap, etc.) for each operating cycle or time period used in the performance test; and

(ii) The owner or operator must submit a certification of compliance with the applicable operational standard for clean charge materials in §63.1506(n)(3) for each 6-month reporting period. Each certification must contain the information in §63.1516(b)(2)(iv).

(5) If a continuous emission monitoring system is included in a site-specific monitoring plan, the plan must include provisions for the installation, operation, and maintenance of the system to provide quality-assured measurements in accordance with all applicable requirements of the general provisions in subpart A of this part.

(6) If a continuous opacity monitoring system is included in a site-specific monitoring plan, the plan must include provisions for the installation, operation, and maintenance of the system to provide quality-assured measurements in accordance with all applicable requirements of this subpart.

(7) If a site-specific monitoring plan includes a scrap inspection program for monitoring the scrap contaminant level of furnace feed/charge materials, the plan must include provisions for the demonstration and implementation

of the program in accordance with all applicable requirements in paragraph (p) of this section.

(8) If a site-specific monitoring plan includes a calculation method for monitoring the scrap contaminant level of furnace feed/charge materials, the plan must include provisions for the demonstration and implementation of the program in accordance with all applicable requirements in paragraph (q) of this section.

(p) *Scrap inspection program for group 1 furnace without add-on air pollution control devices.* A scrap inspection program must include:

(1) A proven method for collecting representative samples and measuring the oil and coatings content of scrap samples;

(2) A scrap inspector training program;

(3) An established correlation between visual inspection and physical measurement of oil and coatings content of scrap samples;

(4) Periodic physical measurements of oil and coatings content of randomly-selected scrap samples and comparison with visual inspection results;

(5) A system for assuring that only acceptable scrap is charged to an affected group 1 furnace; and

(6) Recordkeeping requirements to document conformance with plan requirements.

(q) *Monitoring of scrap contamination level by calculation method for group 1 furnace without add-on air pollution control devices.* The owner or operator of a group 1 furnace dedicated to processing a distinct type of furnace feed/charge composed of scrap with a uniform composition (such as rejected product from a manufacturing process for which the coating-to-scrap ratio can be documented) may include a program in the site-specific monitoring plan for determining, monitoring, and certifying the scrap contaminant level using a calculation method rather than a scrap inspection program. A scrap contaminant monitoring program using a calculation method must include:

(1) Procedures for the characterization and documentation of the contaminant level of the scrap prior to the performance test.

(2) Limitations on the furnace feed/charge to scrap of the same composition as that used in the performance test. If the performance test was conducted with a mixture of scrap and clean charge, limitations on the proportion of scrap in the furnace feed/charge to no greater than the proportion used during the performance test.

(3) Operating, monitoring, recordkeeping, and reporting requirements to ensure that no scrap with a contaminant level higher than that used in the performance test is charged to the furnace.

(r) *Group 2 furnace.* These requirements apply to the owner or operator of a new or existing group 2 furnace. The owner or operator must:

(1) Record a description of the materials charged to each furnace, including any nonreactive, non-HAP-containing/non-HAP-generating fluxing materials or agents.

(2) Submit a certification of compliance with the applicable operational standard for charge materials in § 63.1506(o) for each 6-month reporting period. Each certification must contain the information in § 63.1516(b)(2)(v).

(s) *Site-specific requirements for secondary aluminum processing units.* (1) An owner or operator of a secondary aluminum processing unit at a facility must include, within the OM&M plan prepared in accordance with § 63.1510(b), the following information:

(i) The identification of each emission unit in the secondary aluminum processing unit;

(ii) The specific control technology or pollution prevention measure to be used for each emission unit in the secondary aluminum processing unit and the date of its installation or application;

(iii) The emission limit calculated for each secondary aluminum processing unit and performance test results with supporting calculations demonstrating initial compliance with each applicable emission limit;

(iv) Information and data demonstrating compliance for each emission unit with all applicable design, equipment, work practice or operational standards of this subpart; and

(v) The monitoring requirements applicable to each emission unit in a secondary aluminum processing unit and the monitoring procedures for daily calculation of the 3-day, 24-hour rolling average using the procedure in §63.1510(t).

(2) The SAPU compliance procedures within the OM&M plan may not contain any of the following provisions:

(i) Any averaging among emissions of differing pollutants;

(ii) The inclusion of any affected sources other than emission units in a secondary aluminum processing unit;

(iii) The inclusion of any emission unit while it is shutdown; or

(iv) The inclusion of any periods of startup, shutdown, or malfunction in emission calculations.

(3) To revise the SAPU compliance provisions within the OM&M plan prior to the end of the permit term, the owner or operator must submit a request to the applicable permitting authority containing the information required by paragraph (s)(1) of this section and obtain approval of the applicable permitting authority prior to implementing any revisions.

(t) *Secondary aluminum processing unit*. Except as provided in paragraph (u) of this section, the owner or operator must calculate and record the 3-day, 24-hour rolling average emissions of PM, HCl, and D/F for each secondary aluminum processing unit on a daily basis. To calculate the 3-day, 24-hour rolling average, the owner or operator must:

(1) Calculate and record the total weight of material charged to each emission unit in the secondary aluminum processing unit for each 24-hour day of operation using the feed/charge weight information required in paragraph (e) of this section. If the owner or operator chooses to comply on the basis of weight of aluminum produced by the emission unit, rather than weight of material charged to the emission unit, all performance test emissions results and all calculations must be conducted on the aluminum production weight basis.

(2) Multiply the total feed/charge weight to the emission unit, or the weight of aluminum produced by the emission unit, for each emission unit for the 24-hour period by the emission rate (in lb/ton of feed/charge) for that emission unit (as determined during the performance test) to provide emissions for each emission unit for the 24-hour period, in pounds.

(3) Divide the total emissions for each SAPU for the 24-hour period by the total material charged to the SAPU, or the weight of aluminum produced by the SAPU over the 24-hour period to provide the daily emission rate for the SAPU.

(4) Compute the 24-hour daily emission rate using Equation 4:

$$E_{day} = \frac{\sum_{i=1}^{n}\left(T_i \times ER_i\right)}{\sum_{i=1}^{n} T_i} \qquad \text{(Eq. 4)}$$

Where,

E_{day} = The daily PM, HCl, or D/F emission rate for the secondary aluminum processing unit for the 24-hour period;

T_i = The total amount of feed, or aluminum produced, for emission unit i for the 24-hour period (tons);

ER_i = The measured emission rate for emission unit i as determined in the performance test (lb/ton or μg/Mg of feed/charge); and

n = The number of emission units in the secondary aluminum processing unit.

(5) Calculate and record the 3-day, 24-hour rolling average for each pollutant each day by summing the daily emission rates for each pollutant over the 3 most recent consecutive days and dividing by 3.

(u) *Secondary aluminum processing unit compliance by individual emission unit demonstration*. As an alternative to the procedures of paragraph (t) of this section, an owner or operator may demonstrate, through performance tests, that each individual emission unit within the secondary aluminum production unit is in compliance with the applicable emission limits for the emission unit.

(v) *Alternative monitoring method for lime addition*. The owner or operator of a lime-coated fabric filter that employs intermittent or noncontinuous lime addition may apply to the Administrator for approval of an alternative method

for monitoring the lime addition schedule and rate based on monitoring the weight of lime added per ton of feed/charge for each operating cycle or time period used in the performance test. An alternative monitoring method will not be approved unless the owner or operator provides assurance through data and information that the affected source will meet the relevant emission standards on a continuous basis.

(w) *Alternative monitoring methods.* An owner or operator may submit an application to the Administrator for approval of alternate monitoring requirements to demonstrate compliance with the emission standards of this subpart, subject to the provisions of paragraphs (w)(1) through (6) of this section.

(1) The Administrator will not approve averaging periods other than those specified in this section.

(2) The owner or operator must continue to use the original monitoring requirement until necessary data are submitted and approval is received to use another monitoring procedure.

(3) The owner or operator shall submit the application for approval of alternate monitoring methods no later than the notification of the performance test. The application must contain the information specified in paragraphs (w)(3) (i) through (iii) of this section:

(i) Data or information justifying the request, such as the technical or economic infeasibility, or the impracticality of using the required approach;

(ii) A description of the proposed alternative monitoring requirements, including the operating parameters to be monitored, the monitoring approach and technique, and how the limit is to be calculated; and

(iii) Data and information documenting that the alternative monitoring requirement(s) would provide equivalent or better assurance of compliance with the relevant emission standard(s).

(4) The Administrator will not approve an alternate monitoring application unless it would provide equivalent or better assurance of compliance with the relevant emission standard(s). Before disapproving any alternate monitoring application, the Administrator will provide:

(i) Notice of the information and findings upon which the intended disapproval is based; and

(ii) Notice of opportunity for the owner or operator to present additional supporting information before final action is taken on the application. This notice will specify how much additional time is allowed for the owner or operator to provide additional supporting information.

(5) The owner or operator is responsible for submitting any supporting information in a timely manner to enable the Administrator to consider the application prior to the performance test. Neither submittal of an application nor the Administrator's failure to approve or disapprove the application relieves the owner or operator of the responsibility to comply with any provisions of this subpart.

(6) The Administrator may decide at any time, on a case-by-case basis, that additional or alternative operating limits, or alternative approaches to establishing operating limits, are necessary to demonstrate compliance with the emission standards of this subpart.

EFFECTIVE DATE NOTE: At 67 FR 41123, June 14, 2002, § 63.1510 was amended by revising paragraphs (a) and (b) introductory text effective August 13, 2002. For the convenience of the user the revised text is set forth as follows:

§ 63.1510 Monitoring requirements.

(a) *Summary.* On and after the compliance date established by § 63.1501, the owner or operator of a new or existing affected source or emission unit must monitor all control equipment and processes according to the requirements in this section. Monitoring requirements for each type of affected source and emission unit are summarized in Table 3 to this subpart.

(b) *Operation, maintenance, and monitoring (OM&M) plan.* The owner or operator must prepare and implement for each new or existing affected source and emission unit, a written operation, maintenance, and monitoring (OM&M) plan. The owner or operator of an existing affected source must submit the OM&M plan to the responsible permitting authority no later than the compliance date established by § 63.1501(a). The owner or operator of any new affected source must submit the OM&M plan to the responsible permitting authority within 90 days after a successful initial performance test under § 63.1511(b), or within 90 days after the compliance date

established by §63.1501(b) if no initial performance test is required. Each plan must contain the following information:

* * * * *

§63.1511 Performance test/compliance demonstration general requirements.

(a) *Site-specific test plan*. Prior to conducting a performance test required by this subpart, the owner or operator must prepare and submit a site-specific test plan meeting the requirements in §63.7(c).

(b) *Initial performance test*. Following approval of the site-specific test plan, the owner or operator must demonstrate initial compliance with each applicable emission, equipment, work practice, or operational standard for each affected source and emission unit, and report the results in the notification of compliance status report as described in §63.1515(b). The owner or operator must conduct each performance test according to the requirements of the general provisions in subpart A of this part and this subpart. Owners or operators of affected sources located at facilities which are area sources are subject only to those performance testing requirements pertaining to D/F. Owners or operators of sweat furnaces meeting the specifications of §63.1505(f)(1) are not required to conduct a performance test.

(1) The owner or operator must conduct each test while the affected source or emission unit is operating at the highest production level with charge materials representative of the range of materials processed by the unit and, if applicable, at the highest reactive fluxing rate.

(2) Each performance test for a continuous process must consist of 3 separate runs; pollutant sampling for each run must be conducted for the time period specified in the applicable method or, in the absence of a specific time period in the test method, for a minimum of 3 hours.

(3) Each performance test for a batch process must consist of three separate runs; pollutant sampling for each run must be conducted over the entire process operating cycle.

(4) Where multiple affected sources or emission units are exhausted through a common stack, pollutant sampling for each run must be conducted over a period of time during which all affected sources or emission units complete at least 1 entire process operating cycle or for 24 hours, whichever is shorter.

(5) Initial compliance with an applicable emission limit or standard is demonstrated if the average of three runs conducted during the performance test is less than or equal to the applicable emission limit or standard.

(c) *Test methods*. The owner or operator must use the following methods in appendix A to 40 CFR part 60 to determine compliance with the applicable emission limits or standards:

(1) Method 1 for sample and velocity traverses.

(2) Method 2 for velocity and volumetric flow rate.

(3) Method 3 for gas analysis.

(4) Method 4 for moisture content of the stack gas.

(5) Method 5 for the concentration of PM.

(6) Method 9 for visible emission observations.

(7) Method 23 for the concentration of D/F.

(8) Method 25A for the concentration of THC, as propane.

(9) Method 26A for the concentration of HCl. Where a lime-injected fabric filter is used as the control device to comply with the 90 percent reduction standard, the owner or operator must measure the fabric filter inlet concentration of HCl at a point before lime is introduced to the system.

(d) *Alternative methods*. The owner or operator may use an alternative test method, subject to approval by the Administrator.

(e) *Repeat tests*. The owner or operator of new or existing affected sources and emission units located at secondary aluminum production facilities that are major sources must conduct a performance test every 5 years following the initial performance test.

(f) *Testing of representative emission units*. With the approval of the permitting authority, a single representative or similar group 1 furnace or in-line fluxer which is not controlled by an

add-on control device may be tested to determine the emission rate of all like affected sources at a facility provided that:

(1) The tested emission unit must use identical feed/charge and flux materials in the same proportions as the emission units that it represents;

(2) The tested emission unit is subject to the same work practices and the emission units that it represents;

(3) The tested emission unit is of the same design as the emission units that it represents;

(4) The tested emission unit is tested under the highest load or capacity reasonably expected to occur for any of the emission units that it represents;

(5) At least one of each different style of emission unit at the facility is tested; and

(6) All add-on control devices are tested.

(g) *Establishment of monitoring and operating parameter values.* The owner or operator of new or existing affected sources and emission units must establish a minimum or maximum operating parameter value, or an operating parameter range for each parameter to be monitored as required by § 63.1510 that ensures compliance with the applicable emission limit or standard. To establish the minimum or maximum value or range, the owner or operator must use the appropriate procedures in this section and submit the information required by § 63.1515(b)(4) in the notification of compliance status report. The owner or operator may use existing data in addition to the results of performance tests to establish operating parameter values for compliance monitoring provided each of the following conditions are met to the satisfaction of the applicable permitting authority:

(1) The complete emission test report(s) used as the basis of the parameter(s) is submitted.

(2) The same test methods and procedures as required by this subpart were used in the test.

(3) The owner or operator certifies that no design or work practice changes have been made to the source, process, or emission control equipment since the time of the report.

(4) All process and control equipment operating parameters required to be monitored were monitored as required in this subpart and documented in the test report.

EFFECTIVE DATE NOTE: At 67 FR 41123, June 14, 2002, § 63.1511 was amended by revising paragraphs (a) and (b) introductory text effective August 13, 2002. For the convenience of the user the revised text is set forth as follows:

§ 63.1511 Performance test/compliance demonstration general requirements.

(a) *Site-specific test plan.* Prior to conducting any performance test required by this subpart, the owner or operator must prepare a site-specific test plan which satisfies all of the requirements, and must obtain approval of the plan pursuant to the procedures, set forth in § 63.7(c) in subpart A of this part.

(b) *Initial performance test.* Following approval of the site-specific test plan, the owner or operator must demonstrate initial compliance with each applicable emission, equipment, work practice, or operational standard for each affected source and emission unit, and report the results in the notification of compliance status report as described in § 63.1515(b). The owner or operator of any existing affected source for which an initial performance test is required to demonstrate compliance must conduct this initial performance test no later than the date for compliance established by § 63.1501(a). The owner or operator of any new affected source for which an initial performance test is required must conduct this initial performance test within 90 days after the date for compliance established by § 63.1501(b). Except for the date by which the performance test must be conducted, the owner or operator must conduct each performance test in accordance with the requirements and procedures set forth in § 63.7(c). Owners or operators of affected sources located at facilities which are area sources are subject only to those performance testing requirements pertaining to D/F. Owners or operators of sweat furnaces meeting the specifications of § 63.1505(f)(1) are not required to conduct a performance test.

* * * * *

§ 63.1512 Performance test/compliance demonstration requirements and procedures.

(a) *Aluminum scrap shredder.* The owner or operator must conduct performance tests to measure PM emissions at the outlet of the control system. If visible emission observations is the selected monitoring option, the owner or operator must record visible

emission observations from each exhaust stack for all consecutive 6-minute periods during the PM emission test according to the requirements of Method 9 in appendix A to 40 CFR part 60.

(b) *Thermal chip dryer*. The owner or operator must conduct a performance test to measure THC and D/F emissions at the outlet of the control device while the unit processes only unpainted aluminum chips.

(c) *Scrap dryer/delacquering kiln/decoating kiln*. The owner or operator must conduct performance tests to measure emissions of THC, D/F, HCl, and PM at the outlet of the control device.

(1) If the scrap dryer/delacquering kiln/decoating kiln is subject to the alternative emission limits in §63.1505(e), the average afterburner operating temperature in each 3-hour block period must be maintained at or above 760 °C (1400 °F) for the test.

(2) The owner or operator of a scrap dryer/delacquering kiln/decoating kiln subject to the alternative limits in §63.1505(e) must submit a written certification in the notification of compliance status report containing the information required by §63.1515(b)(7).

(d) *Group 1 furnace with add-on air pollution control devices*. (1) The owner or operator of a group 1 furnace that processes scrap other than clean charge materials with emissions controlled by a lime-injected fabric filter must conduct performance tests to measure emissions of PM and D/F at the outlet of the control device and emissions of HCl at the outlet (for the emission limit) or the inlet and the outlet (for the percent reduction standard).

(2) The owner or operator of a group 1 furnace that processes only clean charge materials with emissions controlled by a lime-injected fabric filter must conduct performance tests to measure emissions of PM at the outlet of the control device and emissions of HCl at the outlet (for the emission limit) or the inlet and the outlet (for the percent reduction standard).

(3) The owner or operator may choose to determine the rate of reactive flux addition to the group 1 furnace and assume, for the purposes of demonstrating compliance with the SAPU emission limit, that all reactive flux added to the group 1 furnace is emitted. Under these circumstances, the owner or operator is not required to conduct an emission test for HCl.

(4) The owner or operator of a sidewell group 1 furnace that conducts reactive fluxing (except for cover flux) in the hearth, or that conducts reactive fluxing in the sidewell at times when the level of molten metal falls below the top of the passage between the sidewell and the hearth, must conduct the performance tests required by paragraph (d)(1) or (d)(2) of this section, to measure emissions from both the sidewell and the hearth.

(e) *Group 1 furnace (including melting holding furnaces) without add-on air pollution control devices*. In the site-specific monitoring plan required by §63.1510(o), the owner or operator of a group 1 furnace (including a melting/holding furnaces) without add-on air pollution control devices must include data and information demonstrating compliance with the applicable emission limits.

(1) If the group 1 furnace processes other than clean charge material, the owner or operator must conduct emission tests to measure emissions of PM, HCl, and D/F at the furnace exhaust outlet.

(2) If the group 1 furnace processes only clean charge, the owner or operator must conduct emission tests to simultaneously measure emissions of PM and HCl at the furnace exhaust outlet. A D/F test is not required. Each test must be conducted while the group 1 furnace (including a melting/holding furnace) processes only clean charge.

(3) The owner or operator may choose to determine the rate of reactive flux addition to the group 1 furnace and assume, for the purposes of demonstrating compliance with the SAPU emission limit, that all reactive flux added to the group 1 furnace is emitted. Under these circumstances, the owner or operator is not required to conduct an emission test for HCl.

(f) *Sweat furnace*. Except as provided in §63.1505(f)(1), the owner or operator must measure emissions of D/F from each sweat furnace at the outlet of the control device.

(g) *Dross-only furnace*. The owner or operator must conduct a performance test to measure emissions of PM from each dross-only furnace at the outlet of each control device while the unit processes only dross.

(h) *In-line fluxer*. (1) The owner or operator must conduct a performance test to measure emissions of HCl and PM. If the in-line fluxer is equipped with an add-on control device, the emissions must be measured at the outlet of the control device. If the in-line fluxer uses no reactive flux materials, emission tests for PM and HCl are not required.

(2) The owner or operator may choose to determine the rate of reactive flux addition to the in-line fluxer and assume, for the purposes of demonstrating compliance with the SAPU emission limit, that all reactive flux added to the in-line fluxer is emitted. Under these circumstances, the owner or operator is not required to conduct an emission test for HCl.

(i) *Rotary dross cooler*. The owner or operator must conduct a performance test to measure PM emissions at the outlet of the control device.

(j) *Secondary aluminum processing unit*. The owner or operator must conduct performance tests as described in paragraphs (j)(1) through (3) of this section. The results of the performance tests are used to establish emission rates in lb/ton of feed/charge for PM and HCl and μg TEQ/Mg of feed/charge for D/F emissions from each emission unit. These emission rates are used for compliance monitoring in the calculation of the 3-day, 24-hour rolling average emission rates using the equation in § 63.1510(t). A performance test is required for:

(1) Each group 1 furnace processing only clean charge to measure emissions of PM and either:

(i) Emissions of HCl (for the emission limit); or

(ii) The mass flow rate of HCl at the inlet to and outlet from the control device (for the percent reduction standard).

(2) Each group 1 furnace that processes scrap other than clean charge to measure emissions of PM and D/F and either:

(i) Emissions of HCl (for the emission limit); or

(ii) The mass flow rate of HCl at the inlet to and outlet from the control device (for the percent reduction standard).

(3) Each in-line fluxer to measure emissions of PM and HCl.

(k) *Feed/charge weight measurement*. During the emission test(s) conducted to determine compliance with emission limits in a kg/Mg (lb/ton) format, the owner or operator of an affected source or emission unit, subject to an emission limit in a kg/Mg (lb/ton) of feed/charge format, must measure (or otherwise determine) and record the total weight of feed/charge to the affected source or emission unit for each of the three test runs and calculate and record the total weight. An owner or operator that chooses to demonstrate compliance on the basis of the aluminum production weight must measure the weight of aluminum produced by the emission unit or affected source instead of the feed/charge weight.

(l) *Continuous opacity monitoring system*. The owner or operator of an affected source or emission unit using a continuous opacity monitoring system must conduct a performance evaluation to demonstrate compliance with Performance Specification 1 in appendix B to 40 CFR part 60. Following the performance evaluation, the owner or operator must measure and record the opacity of emissions from each exhaust stack for all consecutive 6-minute periods during the PM emission test.

(m) *Afterburner*. These requirements apply to the owner or operator of an affected source using an afterburner to comply with the requirements of this subpart.

(1) Prior to the initial performance test, the owner or operator must conduct a performance evaluation for the temperature monitoring device according to the requirements of § 63.8.

(2) The owner or operator must use these procedures to establish an operating parameter value or range for the afterburner operating temperature.

(i) Continuously measure and record the operating temperature of each afterburner every 15 minutes during the THC and D/F performance tests;

(ii) Determine and record the 15-minute block average temperatures for the three test runs; and

(iii) Determine and record the 3-hour block average temperature measurements for the 3 test runs.

(n) *Inlet gas temperature*. The owner or operator of a scrap dryer/delacquering kiln/decoating kiln or a group 1 furnace using a lime-injected fabric filter must use these procedures to establish an operating parameter value or range for the inlet gas temperature.

(1) Continuously measure and record the temperature at the inlet to the lime-injected fabric filter every 15 minutes during the HCl and D/F performance tests;

(2) Determine and record the 15-minute block average temperatures for the 3 test runs; and

(3) Determine and record the 3-hour block average of the recorded temperature measurements for the 3 test runs.

(o) *Flux injection rate*. The owner or operator must use these procedures to establish an operating parameter value or range for the total reactive chlorine flux injection rate.

(1) Continuously measure and record the weight of gaseous or liquid reactive flux injected for each 15 minute period during the HCl and D/F tests, determine and record the 15-minute block average weights, and calculate and record the total weight of the gaseous or liquid reactive flux for the 3 test runs;

(2) Record the identity, composition, and total weight of each addition of solid reactive flux for the 3 test runs;

(3) Determine the total reactive chlorine flux injection rate by adding the recorded measurement of the total weight of chlorine in the gaseous or liquid reactive flux injected and the total weight of chlorine in the solid reactive flux using Equation 5:

$$W_t = F_1 W_1 + F_2 W_2 \qquad \text{(Eq. 5)}$$

Where,

W_t = Total chlorine usage, by weight;

F_1 = Fraction of gaseous or liquid flux that is chlorine;

W_1 = Weight of reactive flux gas injected;

F_2 = Fraction of solid reactive chloride flux that is chlorine (*e.g.*, F = 0.75 for magnesium chloride; and

W_2 = Weight of solid reactive flux;

(4) Divide the weight of total chlorine usage (W_t) for the 3 test runs by the recorded measurement of the total weight of feed for the 3 test runs; and

(5) If a solid reactive flux other than magnesium chloride is used, the owner or operator must derive the appropriate proportion factor subject to approval by the applicable permitting authority.

(p) *Lime injection*. The owner or operator of an affected source or emission unit using a lime-injected fabric filter system must use these procedures during the HCl and D/F tests to establish an operating parameter value for the feeder setting for each operating cycle or time period used in the performance test.

(1) For continuous lime injection systems, ensure that lime in the feed hopper or silo is free-flowing at all times; and

(2) Record the feeder setting for the 3 test runs. If the feed rate setting varies during the runs, determine and record the average feed rate from the 3 runs.

(q) *Bag leak detection system*. The owner or operator of an affected source or emission unit using a bag leak detection system must submit the information described in §63.1515(b)(6) as part of the notification of compliance status report to document conformance with the specifications and requirements in §63.1510(f).

(r) *Labeling*. The owner or operator of each scrap dryer/delacquering kiln/decoating kiln, group 1 furnace, group 2 furnace and in-line fluxer must submit the information described in §63.1515(b)(3) as part of the notification of compliance status report to document conformance with the operational standard in §63.1506(b).

(s) *Capture/collection system*. The owner or operator of a new or existing affected source or emission unit with an add-on control device must submit the information described in §63.1515(b)(2) as part of the notification of compliance status report to document conformance with the operational standard in §63.1506(c).

§ 63.1513 Equations for determining compliance.

(a) *THC emission limit*. Use Equation 6 to determine compliance with an emission limit for THC:

$$E = \frac{C \times MW \times Q \times K_1 \times K_2}{M_V \times P \times 10^6} \qquad \text{(Eq. 6)}$$

Where,

E = Emission rate of measured pollutant, kg/Mg (lb/ton) of feed;
C = Measured volume fraction of pollutant, ppmv;
MW = Molecular weight of measured pollutant, g/g-mole (lb/lb-mole): THC (as propane) = 44.11;
Q = Volumetric flow rate of exhaust gases, dscm/hr (dscf/hr);
K_1 = Conversion factor, 1 kg/1,000 g (1 lb/lb);
K_2 = Conversion factor, 1,000 L/m^3 (1 ft^3/ft^3);
M_v = Molar volume, 24.45 L/g-mole (385.3 ft^3/lb-mole); and
P = Production rate, Mg/hr (ton/hr).

(b) *PM, HCl and D/F emission limits*. Use Equation 7 to determine compliance with an emission limit for PM, HCl, and D/F:

$$E = \frac{C \times Q \times K_1}{P} \qquad \text{(Eq. 7)}$$

Where,

E = Emission rate of PM, HCl, or D/F, kg/Mg (lb/ton) of feed;
C = Concentration of PM, HCl, or D/F, g/dscm (gr/dscf);
Q = Volumetric flow rate of exhaust gases, dscm/hr (dscf/hr);
K_1 = Conversion factor, 1 kg/1,000 g (1 lb/7,000 gr); and
P = Production rate, Mg/hr (ton/hr).

(c) *HCl percent reduction standard*. Use Equation 8 to determine compliance with an HCl percent reduction standard:

$$\%R = \frac{L_i - L_o}{L_i} \times 100 \qquad \text{(Eq. 8)}$$

Where,

%R = Percent reduction of the control device;
L_i = Inlet loading of pollutant, kg/Mg (lb/ton); and
L_o = Outlet loading of pollutant, kg/Mg (lb/ton).

(d) *Conversion of D/F measurements to TEQ units*. To convert D/F measurements to TEQ units, the owner or operator must use the procedures and equations in ''Interim Procedures for Estimating Risks Associated with Exposures to Mixtures of Chlorinated Dibenzo-p-Dioxins and -Dibenzofurans (CDDs and CDFs) and 1989 Update'' (EPA–625/3–89–016), incorporated by reference in § 63.1502 of this subpart, available from the National Technical Information Service (NTIS), 5285 Port Royal Road, Springfield, Virginia, NTIS no. PB 90–145756.

(e) *Secondary aluminum processing unit*. Use the procedures in paragraphs (e)(1), (2), and (3) or the procedure in paragraph (e)(4) of this section to determine compliance with emission limits for a secondary aluminum processing unit.

(1) Use Equation 9 to compute the mass-weighted PM emissions for a secondary aluminum processing unit. Compliance is achieved if the mass-weighted emissions for the secondary aluminum processing unit (E_{cPM}) is less than or equal to the emission limit for the secondary aluminum processing unit (L_{cPM}) calculated using Equation 1 in § 63.1505(k).

$$E_{C_{PM}} = \frac{\sum_{i=1}^{n}\left(E_{ti_{PM}} \times T_{ti}\right)}{\sum_{i=1}^{n}\left(T_{ti}\right)} \qquad \text{(Eq. 9)}$$

Where,

E_{cPM} = The mass-weighted PM emissions for the secondary aluminum processing unit;
E_{tiPM} = Measured PM emissions for individual emission unit i;
T_{ti} = The average feed rate for individual emission unit i during the operating cycle or performance test period; and
n=The number of emission units in the secondary aluminum processing unit.

(2) Use Equation 10 to compute the aluminum mass-weighted HCl emissions for the secondary aluminum processing unit. Compliance is achieved if the mass-weighted emissions for the secondary aluminum processing unit (E_{cHCl}) is less than or equal to the emission limit for the secondary aluminum processing unit (L_{cHCl}) calculated using Equation 2 in § 63.1505(k).

$$E_{C_{HCl}} = \frac{\sum_{i=1}^{n}\left(E_{ti_{HCl}} \times T_{ti}\right)}{\sum_{i=1}^{n}\left(T_{ti}\right)} \qquad \text{(Eq. 10)}$$

Where,

E_{cHCl} = The mass-weighted HCl emissions for the secondary aluminum processing unit; and

E_{tiHCl} = Measured HCl emissions for individual emission unit i.

(3) Use Equation 11 to compute the aluminum mass-weighted D/F emissions for the secondary aluminum processing unit. Compliance is achieved if the mass-weighted emissions for the secondary aluminum processing unit is less than or equal to the emission limit for the secondary aluminum processing unit ($L_{cD/F}$) calculated using Equation 3 in §63.1505(k).

$$E_{C_{D/F}} = \frac{\sum_{i=1}^{n}\left(E_{ti_{D/F}} \times T_{ti}\right)}{\sum_{i=1}^{n}\left(T_{ti}\right)} \qquad \text{(Eq. 11)}$$

Where,

$E_{cD/F}$ = The mass-weighted D/F emissions for the secondary aluminum processing unit; and

$E_{tiD/F}$ = Measured D/F emissions for individual emission unit i.

(4) As an alternative to using the equations in paragraphs (e)(1), (2), and (3) of this section, the owner or operator may demonstrate compliance for a secondary aluminum processing unit by demonstrating that each existing group 1 furnace is in compliance with the emission limits for a new group 1 furnace in §63.1505(i) and that each existing in-line fluxer is in compliance with the emission limits for a new in-line fluxer in §63.1505(j).

§63.1514 [Reserved]

NOTIFICATIONS, REPORTS, AND RECORDS

§63.1515 Notifications.

(a) *Initial notifications.* The owner or operator must submit initial notifications to the applicable permitting authority as described in paragraphs (a)(1) through (7) of this section.

(1) As required by §63.9(b)(1), the owner or operator must provide notification for an area source that subsequently increases its emissions such that the source is a major source subject to the standard.

(2) As required by §63.9(b)(3), the owner or operator of a new or reconstructed affected source, or a source that has been reconstructed such that it is an affected source, that has an initial startup after the effective date of this subpart and for which an application for approval of construction or reconstruction is not required under §63.5(d), must provide notification that the source is subject to the standard.

(3) As required by §63.9(b)(4), the owner or operator of a new or reconstructed major affected source that has an initial startup after the effective date of this subpart and for which an application for approval of construction or reconstruction is required by §63.5(d) must provide the following notifications:

(i) Intention to construct a new major affected source, reconstruct a major source, or reconstruct a major source such that the source becomes a major affected source;

(ii) Date when construction or reconstruction was commenced (submitted simultaneously with the application for approval of construction or reconstruction if construction or reconstruction was commenced before the effective date of this subpart, or no later than 30 days after the date construction or reconstruction commenced if construction or reconstruction commenced after the effective date of this subpart);

(iii) Anticipated date of startup; and

(iv) Actual date of startup.

(4) As required by §63.9(b)(5), after the effective date of this subpart, an owner or operator who intends to construct a new affected source or reconstruct an affected source subject to this subpart, or reconstruct a source such that it becomes an affected source subject to this subpart, must provide notification of the intended construction or reconstruction. The notification must include all the information required for an application for approval

of construction or reconstruction as required by § 63.5(d). For major sources, the application for approval of construction or reconstruction may be used to fulfill these requirements.

(i) The application must be submitted as soon as practicable before the construction or reconstruction is planned to commence (but no sooner than the effective date) if the construction or reconstruction commences after the effective date of this subpart; or

(ii) The application must be submitted as soon as practicable before startup but no later than 90 days after the effective date of this subpart if the construction or reconstruction had commenced and initial startup had not occurred before the effective date.

(5) As required by § 63.9(d), the owner or operator must provide notification of any special compliance obligations for a new source.

(6) As required by § 63.9(e) and (f), the owner or operator must provide notification of the anticipated date for conducting performance tests and visible emission observations. The owner or operator must notify the Administrator of the intent to conduct a performance test at least 60 days before the performance test is scheduled; notification of opacity or visible emission observations for a performance test must be provided at least 30 days before the observations are scheduled to take place.

(7) As required by § 63.9(g), the owner or operator must provide additional notifications for sources with continuous emission monitoring systems or continuous opacity monitoring systems.

(b) *Notification of compliance status report.* Each owner or operator must submit a notification of compliance status report within 60 days after the compliance dates specified in § 63.1501. The notification must be signed by the responsible official who must certify its accuracy. A complete notification of compliance status report must include the information specified in paragraphs (a)(1) through (10) of this section. The required information may be submitted in an operating permit application, in an amendment to an operating permit application, in a separate submittal, or in any combination. In a State with an approved operating permit program where delegation of authority under section 112(l) of the CAA has not been requested or approved, the owner or operator must provide duplicate notification to the applicable Regional Administrator. If an owner or operator submits the information specified in this section at different times or in different submittals, later submittals may refer to earlier submittals instead of duplicating and resubmitting the information previously submitted. A complete notification of compliance status report must include:

(1) All information required in § 63.9(h). The owner or operator must provide a complete performance test report for each affected source and emission unit for which a performance test is required. A complete performance test report includes all data, associated measurements, and calculations (including visible emission and opacity tests).

(2) The approved site-specific test plan and performance evaluation test results for each continuous monitoring system (including a continuous emission or opacity monitoring system).

(3) Unit labeling as described in § 63.1506(b), including process type or furnace classification and operating requirements.

(4) The compliant operating parameter value or range established for each affected source or emission unit with supporting documentation and a description of the procedure used to establish the value (*e.g.*, lime injection rate, total reactive chlorine flux injection rate, afterburner operating temperature, fabric filter inlet temperature), including the operating cycle or time period used in the performance test.

(5) Design information and analysis, with supporting documentation, demonstrating conformance with the requirements for capture/collection systems in § 63.1506(c).

(6) If applicable, analysis and supporting documentation demonstrating conformance with EPA guidance and specifications for bag leak detection systems in § 63.1510(f).

(7) Manufacturer's specification or analysis documenting the design residence time of no less than 1 second for

each afterburner used to control emissions from a scrap dryer/delacquering kiln/decoating kiln subject to alternative emission standards in §63.1505(e).

(8) Manufacturer's specification or analysis documenting the design residence time of no less than 2 seconds and design operating temperature of no less than 1600 °F for each afterburner used to control emissions from a sweat furnace that is not subject to a performance test.

(9) Approved OM&M plan (including site-specific monitoring plan for each group 1 furnace with no add-on air pollution control device).

(10) Startup, shutdown, and malfunction plan, with revisions.

EFFECTIVE DATE NOTE: At 67 FR 41124, June 14, 2002 §63.1515 was amended by removing the first sentence in the introductory text of paragraph (b) and adding, in its place, two new sentences effective August 13, 2002. For the convenience of the user the revised text is set forth as follows:

§63.1515 Notifications.

* * * * *

(b) *Notification of compliance status report.* Each owner or operator of an existing affected source must submit a notification of compliance status report within 60 days after the compliance date established by §63.1501(a). Each owner or operator of a new affected source must submit a notification of compliance status report within 90 days after conducting the initial performance test required by §63.1511(b), or within 90 days after the compliance date established by §63.1501(b) if no initial performance test is required. * * *

* * * * *

§63.1516 Reports.

(a) *Startup, shutdown, and malfunction plan/reports.* The owner or operator must develop and implement a written plan as described in §63.6(e)(3) that contains specific procedures to be followed for operating and maintaining the source during periods of startup, shutdown, and malfunction, and a program of corrective action for malfunctioning process and air pollution control equipment used to comply with the standard. The owner or operator shall also keep records of each event as required by §63.10(b) and record and report if an action taken during a startup, shutdown, or malfunction is not consistent with the procedures in the plan as described in §63.6(e)(3). In addition to the information required in §63.6(e)(3), the plan must include:

(1) Procedures to determine and record the cause of the malfunction and the time the malfunction began and ended; and

(2) Corrective actions to be taken in the event of a malfunction of a process or control device, including procedures for recording the actions taken to correct the malfunction or minimize emissions.

(b) *Excess emissions/summary report.* As required by §63.10(e)(3), the owner or operator must submit semiannual reports within 60 days after the end of each 6-month period. Each report must contain the information specified in §63.10(c). When no deviations of parameters have occurred, the owner or operator must submit a report stating that no excess emissions occurred during the reporting period.

(1) A report must be submitted if any of these conditions occur during a 6-month reporting period:

(i) The corrective action specified in the OM&M plan for a bag leak detection system alarm was not initiated within 1 hour.

(ii) The corrective action specified in the OM&M plan for a continuous opacity monitoring deviation was not initiated within 1 hour.

(iii) The corrective action specified in the OM&M plan for visible emissions from an aluminum scrap shredder was not initiated within 1 hour.

(iv) An excursion of a compliant process or operating parameter value or range (*e.g.*, lime injection rate or screw feeder setting, total reactive chlorine flux injection rate, afterburner operating temperature, fabric filter inlet temperature, definition of acceptable scrap, or other approved operating parameter).

(v) An action taken during a startup, shutdown, or malfunction was not consistent with the procedures in the plan as described in §63.6(e)(3).

(vi) An affected source (including an emission unit in a secondary aluminum

processing unit) was not operated according to the requirements of this subpart.

(vii) A deviation from the 3-day, 24-hour rolling average emission limit for a secondary aluminum processing unit.

(2) Each report must include each of these certifications, as applicable:

(i) For each thermal chip dryer: ''Only unpainted aluminum chips were used as feedstock in any thermal chip dryer during this reporting period.''

(ii) For each dross-only furnace: ''Only dross was used as the charge material in any dross-only furnace during this reporting period.''

(iii) For each sidewell group 1 furnace with add-on air pollution control devices: ''Each furnace was operated such that the level of molten metal remained above the top of the passage between the sidewell and hearth during reactive fluxing, and reactive flux, except for cover flux, was added only to the sidewell or to a furnace hearth equipped with an add-on air pollution control device for PM, HCl, and D/F emissions during this reporting period.''

(iv) For each group 1 melting/holding furnace without add-on air pollution control devices and using pollution prevention measures that processes only clean charge material: ''Each group 1 furnace without add-on air pollution control devices subject to emission limits in § 63.1505(i)(2) processed only clean charge during this reporting period.''

(v) For each group 2 furnace: ''Only clean charge materials were processed in any group 2 furnace during this reporting period, and no fluxing was performed or all fluxing performed was conducted using only nonreactive, non-HAP-containing/non-HAP-generating fluxing gases or agents, except for cover fluxes, during this reporting period.''

(vi) For each in-line fluxer using no reactive flux: ''Only nonreactive, non-HAP-containing, non-HAP-generating flux gases, agents, or materials were used at any time during this reporting period.''

(3) The owner or operator must submit the results of any performance test conducted during the reporting period, including one complete report documenting test methods and procedures, process operation, and monitoring parameter ranges or values for each test method used for a particular type of emission point tested.

(c) *Annual compliance certifications.* For the purpose of annual certifications of compliance required by 40 CFR part 70 or 71, the owner or operator must certify continuing compliance based upon, but not limited to, the following conditions:

(1) Any period of excess emissions, as defined in paragraph (b)(1) of this section, that occurred during the year were reported as required by this subpart; and

(2) All monitoring, recordkeeping, and reporting requirements were met during the year.

§ 63.1517 Records

(a) As required by § 63.10(b), the owner or operator shall maintain files of all information (including all reports and notifications) required by the general provisions and this subpart.

(1) The owner or operator must retain each record for at least 5 years following the date of each occurrence, measurement, maintenance, corrective action, report, or record. The most recent 2 years of records must be retained at the facility. The remaining 3 years of records may be retained off site.

(2) The owner or operator may retain records on microfilm, computer disks, magnetic tape, or microfiche; and

(3) The owner or operator may report required information on paper or on a labeled computer disk using commonly available and EPA-compatible computer software.

(b) In addition to the general records required by § 63.10(b), the owner or operator of a new or existing affected source (including an emission unit in a secondary aluminum processing unit) must maintain records of:

(1) For each affected source and emission unit with emissions controlled by a fabric filter or a lime-injected fabric filter:

(i) If a bag leak detection system is used, the number of total operating hours for the affected source or emission unit during each 6-month reporting period, records of each alarm, the

time of the alarm, the time corrective action was initiated and completed, and a brief description of the cause of the alarm and the corrective action(s) taken.

(ii) If a continuous opacity monitoring system is used, records of opacity measurement data, including records where the average opacity of any 6-minute period exceeds 5 percent, with a brief explanation of the cause of the emissions, the time the emissions occurred, the time corrective action was initiated and completed, and the corrective action taken.

(iii) If an aluminum scrap shredder is subject to visible emission observation requirements, records of all Method 9 observations, including records of any visible emissions during a 30-minute daily test, with a brief explanation of the cause of the emissions, the time the emissions occurred, the time corrective action was initiated and completed, and the corrective action taken.

(2) For each affected source with emissions controlled by an afterburner:

(i) Records of 15-minute block average afterburner operating temperature, including any period when the average temperature in any 3-hour block period falls below the compliant operating parameter value with a brief explanation of the cause of the excursion and the corrective action taken; and

(ii) Records of annual afterburner inspections.

(3) For each scrap dryer/delacquering kiln/decoating kiln and group 1 furnace, subject to D/F and HCl emission standards with emissions controlled by a lime-injected fabric filter, records of 15-minute block average inlet temperatures for each lime-injected fabric filter, including any period when the 3-hour block average temperature exceeds the compliant operating parameter value +14 °C (+25 °F), with a brief explanation of the cause of the excursion and the corrective action taken.

(4) For each affected source and emission unit with emissions controlled by a lime-injected fabric filter:

(i) Records of inspections at least once every 8-hour period verifying that lime is present in the feeder hopper or silo and flowing, including any inspection where blockage is found, with a brief explanation of the cause of the blockage and the corrective action taken, and records of inspections at least once every 4-hour period for the subsequent 3 days. If flow monitors, pressure drop sensors or load cells are used to verify that lime is present in the hopper and flowing, records of all monitor or sensor output including any event where blockage was found, with a brief explanation of the cause of the blockage and the corrective action taken;

(ii) If lime feeder setting is monitored, records of daily inspections of feeder setting, including records of any deviation of the feeder setting from the setting used in the performance test, with a brief explanation of the cause of the deviation and the corrective action taken.

(iii) If lime addition rate for a noncontinuous lime injection system is monitored pursuant to the approved alternative monitoring requirements in §63.1510(v), records of the time and mass of each lime addition during each operating cycle or time period used in the performance test and calculations of the average lime addition rate (lb/ton of feed/charge).

(5) For each group 1 furnace (with or without add-on air pollution control devices) or in-line fluxer, records of 15-minute block average weights of gaseous or liquid reactive flux injection, total reactive flux injection rate and calculations (including records of the identity, composition, and weight of each addition of gaseous, liquid or solid reactive flux), including records of any period the rate exceeds the compliant operating parameter value and corrective action taken.

(6) For each continuous monitoring system, records required by §63.10(c).

(7) For each affected source and emission unit subject to an emission standard in kg/Mg (lb/ton) of feed/charge, records of feed/charge (or throughput) weights for each operating cycle or time period used in the performance test.

(8) Approved site-specific monitoring plan for a group 1 furnace without add-on air pollution control devices with records documenting conformance with the plan.

(9) Records of all charge materials for each thermal chip dryer, dross-only

furnace, and group 1 melting/holding furnaces without air pollution control devices processing only clean charge.

(10) Operating logs for each group 1 sidewell furnace with add-on air pollution control devices documenting conformance with operating standards for maintaining the level of molten metal above the top of the passage between the sidewell and hearth during reactive flux injection and for adding reactive flux only to the sidewell or a furnace hearth equipped with a control device for PM, HCl, and D/F emissions.

(11) Operating logs for each in-line fluxer using no reactive flux materials documenting each flux gas, agent, or material used during each operating cycle.

(12) Records of all charge materials and fluxing materials or agents for a group 2 furnace.

(13) Records of monthly inspections for proper unit labeling for each affected source and emission unit subject to labeling requirements.

(14) Records of annual inspections of emission capture/collection and closed vent systems.

(15) Records for any approved alternative monitoring or test procedure.

(16) Current copy of all required plans, including any revisions, with records documenting conformance with the applicable plan, including:

(i) Startup, shutdown, and malfunction plan;

(ii) For major sources, OM&M plan; and

(iii) Site-specific secondary aluminum processing unit emission plan (if applicable).

(17) For each secondary aluminum processing unit, records of total charge weight, or if the owner or operator chooses to comply on the basis of aluminum production, total aluminum produced for each 24-hour period and calculations of 3-day, 24-hour rolling average emissions.

OTHER

§ 63.1518 Applicability of general provisions.

The requirements of the general provisions in subpart A of this part that are applicable to the owner or operator subject to the requirements of this subpart are shown in appendix A to this subpart.

§ 63.1519 Delegation of authority.

(a) In delegating implementation and enforcement authority to a State under section 112(d) of the CAA, the authorities contained in paragraph (b) of this section are retained by the Administrator and are not transferred to a State.

(b) Applicability determinations pursuant to § 63.1.

§ 63.1520 [Reserved]

TABLE 1 TO SUBPART RRR OF PART 63

Table 1 to Subpart RRR--Emission Standards for New and Existing Affected Sources

Affected source/ Emission unit	Pollutant	Limit	Units
All new and existing affected sources and emission units that are controlled with a PM add-on control device and that choose to monitor with a COM; and all new and existing aluminum scrap shredders that choose to monitor with a COM or to monitor visible emissions	Opacity	10	percent
New and existing aluminum scrap shredder	PM	0.01	gr/dscf
New and existing thermal chip dryer	THC D/F[a]	0.80 2.50	lb/ton of feed μg TEQ/Mg of feed
New and existing scrap dryer/delacquering kiln/decoating kiln	PM HCl THC D/F[a]	0.08 0.80 0.06 0.25	lb/ton of feed lb/ton of feed lb/ton of feed μg TEQ/Mg of feed
Or			
Alternative limits if afterburner has a design residence time of at least 1 second and operates at a temperature of at least 1400 °F	PM HCl THC D/F[a]	0.30 1.50 0.20 5.0	lb/ton of feed lb/ton of feed lb/ton of feed μg TEQ/Mg of feed
New and existing sweat furnace	D/F[a]	0.80	ng TEQ/dscm @ 11% O_2[b]
New and existing dross-only furnace	PM	0.30	lb/ton of feed

New and existing in-line fluxer[c]	HCl PM	0.04 0.01	lb/ton of feed lb/ton of feed
New and existing in-line fluxer with no reactive fluxing		No limit	Work practice: no reactive fluxing
New and existing rotary dross cooler	PM	0.04	gr/dscf
New and existing clean furnace (Group 2)		No limit	Work practices: clean charge only and no reactive fluxing
New and existing group 1 melting/holding furnace (processing only clean charge)[c]	PM HCl	0.80 0.40 or 10	lb/ton of feed lb/ton of feed percent of the HCl upstream of an add-on control device
New and existing group 1 furnace[c]	PM HCl	0.40 0.40 or 10	lb/ton of feed lb/ton of feed percent of the HCl upstream of an add-on control device
	D/F[a]	15.0	μg TEQ/Mg of feed
New and existing group 1 furnace[c] with clean charge only	PM HCl	0.40 0.40 Or 10	lb/ton of feed lb/ton of feed percent of the HCl upstream of an add-on control device
	D/F[a]	No Limit	Clean charge only

New and existing secondary aluminum processing unit[a,d] (consists of all existing group 1 furnaces and existing in-line flux boxes at the facility, or all simultaneously constructed new group 1 furnaces and new in-line fluxers)	PM[e]	$L_{t_{PM}} = \frac{\sum_{i=1}^{n} (L_{i_{PM}} \times T_i)}{\sum_{i=1}^{n} (T_i)}$
	HCl[f]	$L_{t_{HCl}} = \frac{\sum_{i=1}^{n} (L_{i_{HCl}} \times T_i)}{\sum_{i=1}^{n} (T_i)}$
	D/F[g]	$L_{t_{D/F}} = \frac{\sum_{i=1}^{n} (L_{i_{D/F}} \times T_i)}{\sum_{i=1}^{n} (T_i)}$

[a] D/F limit applies to a unit at a major or area source.

[b] Sweat furnaces equipped with afterburners meeting the specifications of §63.1505(f)(1) are not required to conduct a performance test.

[c] These limits are also used to calculate the limits applicable to secondary aluminum processing units.

[d] Equation definitions: L_{iPM} = the PM emission limit for individual emission unit i in the secondary aluminum processing unit [kg/Mg (lb/ton) of feed]; T_i = the feed rate for individual emission unit i in the secondary aluminum processing unit; L_{tPM} = the overall PM emission limit for the secondary aluminum processing unit [kg/Mg (lb/ton) of feed]; L_{iHCl} = the HCl emission limit for individual emission unit i in the secondary aluminum processing unit [kg/Mg (lb/ton) of feed]; L_{tHCl} = the overall HCl emission limit for the secondary aluminum processing unit [kg/Mg (lb/ton) of feed]; $L_{iD/F}$ = the D/F emission limit for individual emission unit i [μg TEQ/Mg (gr TEQ/ton) of feed]; $L_{tD/F}$ = the overall D/F emission limit for the secondary aluminum processing unit [μg TEQ/Mg (gr TEQ/ton) of feed]; n = the number of units in the secondary aluminum processing unit.

[e] In-line fluxers using no reactive flux materials cannot be included in this calculation since they are not subject to the PM limit.

[f] In-line fluxers using no reactive flux materials cannot be included in this calculation since they are not subject to the HCl limit.

[g] Clean charge furnaces cannot be included in this calculation since they are not subject to the D/F limit.

TABLE 2 TO SUBPART RRR OF PART 63—SUMMARY OF OPERATING REQUIREMENTS FOR NEW AND EXISTING AFFECTED SOURCES AND EMISSION UNITS

Affected source/emission unit	Monitor type/operation/process	Operating requirements
All affected sources and emission units with an add-on air pollution control device.	Emission capture and collection system.	Design and install in accordance with Industrial Ventilation: A Handbook of Recommended Practice; operate in accordance with OM&M plan.[b]
All affected sources and emission units subject to production-based (lb/ton of feed) emission limits[a].	Charge/feed weight or Production weight.	Operate a device that records the weight of each charge; Operate in accordance with OM&M plan.[b]
Group 1 furnace, group 2 furnace, in-line fluxer and scrap dryer/delacquering kiln/decoating kiln.	Labeling	Identification, operating parameter ranges and operating requirements posted at affected sources and emission units; control device temperature and residence time requirements posted at scrap dryer/delacquering kiln/decoating kiln.
Aluminum scrap shredder with fabric filter.	Bag leak detector or	Initiate corrective action within 1-hr of alarm and complete in accordance with OM&M plan[b]; operate such that alarm does not sound more than 5% of operating time in 6-month period.
	COM or	Initiate corrective action within 1-hr of a 6-minute average opacity reading of 5% or more and complete in accordance with OM&M plan.[b]
	VE	Initiate corrective action within 1-hr of any observed VE and complete in accordance with the OM&M plan.[b]
Thermal chip dryer with afterburner.	Afterburner operating temperature.	Maintain average temperature for each 3-hr period at or above average operating temperature during the performance test.
	Afterburner operation	Operate in accordance with OM&M plan.[b]
	Feed material	Operate using only unpainted aluminum chips.
Scrap dryer/delacquering kiln/decoating kiln with afterburner and lime-injected fabric filter.	Afterburner operating temperature.	Maintain average temperature for each 3-hr period at or above average operating temperature during the performance test.
	Afterburner operation	Operate in accordance with OM&M plan.[b]
	Bag leak detector or	Initiate corrective action within 1-hr of alarm and complete in accordance with the OM&M plan;[b] operate such that alarm does not sound more than 5% of operating time in 6-month period.
	COM	Initiate corrective action within 1-hr of a 6-minute average opacity reading of 5% or more and complete in accordance with the OM&M plan.[b]
	Fabric filter inlet temperature	Maintain average fabric filter inlet temperature for each 3-hr period at or below average temperature during the performance test +14 °C (+25 °F).
	Lime injection rate	Maintain free-flowing lime in the feed hopper or silo at all times for continuous injection systems; maintain feeder setting at level established during the performance test for continuous injection systems.
Sweat furnace with afterburner	Afterburner operating temperature.	If a performance test was conducted, maintain average temperature for each 3-hr period at or above average operating temperature during the performance test; if a performance test was not conducted, and afterburner meets specifications of § 63.1505(f)(1), maintain average temperature for each 3-hr period at or above 1600 °F.
	Afterburner operation	Operate in accordance with OM&M plan.[b]
Dross-only furnace with fabric filter.	Bag leak detector or	Initiate corrective action within 1-hr of alarm and complete in accordance with the OM&M plan;[b] operate such that alarm does not sound more than 5% of operating time in 6-month period.
	COM	Initiate corrective action within 1-hr of a 6-minute average opacity reading of 5% or more and complete in accordance with the OM&M plan.[b]
	Feed/charge material	Operate using only dross as the feed material.
Rotary dross cooler with fabric filter.	Bag leak detector or	Initiate corrective action within 1-hr of alarm and complete in accordance with the OM&M plan;[b] operate such that alarm does not sound more than 5% of operating time in 6-month period.
	COM	Initiate corrective action within 1-hr of a 6-minute average opacity reading of 5% or more and complete in accordance with the OM&M plan.[b]
In-line fluxer with lime-injected fabric filter (including those that are part of a secondary aluminum processing unit).	Bag leak detector or	Initiate corrective action within 1-hr of alarm and complete in accordance with the OM&M plan;[b] operate such that alarm does not sound more than 5% of operating time in 6-month period.

Affected source/emission unit	Monitor type/operation/process	Operating requirements
	COM	Initiate corrective action within 1-hr of a 6-minute average opacity reading of 5% or more and complete in accordance with the OM&M plan.[b]
	Lime injection rate	Maintain free-flowing lime in the feed hopper or silo at all times for continuous injection systems; maintain feeder setting at level established during performance test for continuous injection systems.
	Reactive flux injection rate	Maintain reactive flux injection rate at or below rate used during the performance test for each operating cycle or time period used in the performance test.
In-line fluxer (using no reactive flux material).	Flux materials	Use no reactive flux.
Group 1 furnace with lime-injected fabric filter (including those that are part of a secondary aluminum processing unit).	Bag leak detector or	Initiate corrective action within 1-hr of alarm; operate such that alarm does not sound more than 5% of operating time in 6-month period; complete corrective action in accordance with the OM&M plan.[b]
	COM	Initiate corrective action within 1-hr of a 6-minute average opacity reading of 5% or more; complete corrective action in accordance with the OM&M plan.[b]
	Fabric filter inlet temperature	Maintain average fabric filter inlet temperature for each 3-hour period at or below average temperature during the performance test +14 &degC (+25 °F).
	Reactive flux injection rate	Maintain reactive flux injection rate (lb/hr) at or below rate used during the performance test for each furnace cycle.
	Lime injection rate	Maintain free-flowing lime in the feed hopper or silo at all times for continuous injection systems; maintain feeder setting at level established at performance test for continuous injection systems.
	Maintain molten aluminum level	Operate side-well furnaces such that the level of molten metal is above the top of the passage between sidewell and hearth during reactive flux injection, unless the hearth is also controlled.
	Fluxing in sidewell furnace hearth.	Add reactive flux only to the sidewell of the furnace unless the hearth is also controlled.
Group 1 furnace without add-on controls (including those that are part of a secondary aluminum processing unit).	Reactive flux injection rate	Maintain reactive flux injection rate (lb/hr) at or below rate used during the performance test for each operating cycle or time period used in the performance test.
	Site-specific monitoring plan[c]	Operate furnace within the range of charge materials, contaminant levels, and parameter values established in the site-specific monitoring plan.
	Feed material (melting/holding furnace).	Use only clean charge.
Clean (group 2) furnace	Charge and flux materials	Use only clean charge. Use no reactive flux.

[a] Thermal chip dryers, scrap dryers/delacquering kilns/decoating kilns, dross-only furnaces, in-line fluxers and group 1 furnaces including melting/holding furnaces.
[b] OM&M plan—Operation, maintenance, and monitoring plan.
[c] Site-specific monitoring plan. Owner/operators of group 1 furnaces without control devices must include a section in their OM&M plan that documents work practice and pollution prevention measures, including procedures for scrap inspection, by which compliance is achieved with emission limits and process or feed parameter-based operating requirements. This plan and the testing to demonstrate adequacy of the monitoring plan must be developed in coordination with and approved by the permitting authority.

TABLE 3 TO SUBPART RRR OF PART 63—SUMMARY OF MONITORING REQUIREMENTS FOR NEW AND EXISTING AFFECTED SOURCES AND EMISSION UNITS

Affected source/Emission unit	Monitor type/Operation/Process	Monitoring requirements
All affected sources and emission units with an add-on air pollution control device.	Emission capture and collection system.	Annual inspection of all emission capture, collection, and transport systems to ensure that systems continue to operate in accordance with ACGIH standards.
All affected sources and emission units subject to production-based (lb/ton of feed/charge) emission limits[a].	Feed/charge weight	Record weight of each feed/charge, weight measurement device or other procedure accuracy of ±1%[b]; calibrate according to manufacturers specifications, or at least once every 6 months.
Group 1 furnace, group 2 furnace, in-line fluxer, and scrap dryer/delacquering kiln/decoating kiln.	Labeling	Check monthly to confirm that labels are intact and legible.

Affected source/Emission unit	Monitor type/Operation/Process	Monitoring requirements
Aluminum scrap shredder with fabric filter.	Bag leak detector or	Install and operate in accordance with ''Fabric Filter Bag Leak Detection Guidance''[c]; record voltage output from bag leak detector.
	COM or	Design and install in accordance with PS–1; collect data in accordance with subpart A of 40 CFR part 63; determine and record 6-minute block averages.
	VE	Conduct and record results of 30-minute daily test in accordance with Method 9.
Thermal chip dryer with afterburner.	Afterburner operating temperature.	Continuous measurement device to meet specifications in § 63.1510(g)(1); record average temperature for each 15-minute block; determine and record 3-hr block averages.
	Afterburner operation	Annual inspection of afterburner internal parts; complete repairs in accordance with the OM&M plan.
	Feed/charge material	Record identity of each feed/charge; certify feed/charge materials every 6 months.
Scrap dryer/ delacquering kiln/ decoating kiln with afterburner and lime injected fabric filter.	Afterburner operating temperature.	Continuous measurement device to meet specifications in § 63.1510(g)(1); record temperatures in 15-minute block averages; determine and record 3-hr block averages.
	Afterburner operation	Annual inspection of afterburner internal parts; complete repairs in accordance with the OM&M plan.
	Bag leak detector or	Install and operate in accordance with ''Fabric Filter Bag Leak Detection Guidance''[c]; record voltage output from bag leak detector.
	COM	Design and install in accordance with PS–1; collect data in accordance with subpart A of 40 CFR part 63; determine and record 6-minute block averages.
	Lime injection rate	For continuous injection systems, inspect each feed hopper or silo every 8 hrs to verify that lime is free-flowing; record results of each inspection. If blockage occurs, inspect every 4 hrs for 3 days; return to 8-hr inspections if corrective action results in no further blockage during 3-day periode; record feeder setting daily.
	Fabric filter inlet temperature	Continuous measurement device to meet specifications in § 63.1510(h)(2); record temperatures in 15-minute block averages; determine and record 3-hr block averages.
Sweat furnace with afterburner	Afterburner operating temperature.	Continuous measurement device to meet specifications in § 63.1510(g)(1); record temperatures in 15-minute block averages; determine and record 3-hr block averages.
	Afterburner operation	Annual inspection of afterburner internal parts; complete repairs in accordance with the OM&M plan.
Dross-only furnace with fabric filter.	Bag leak detector or	Install and operate in accordance with ''Fabric Filter Bag Leak Detection Guidance''[c]; record output voltage from bag leak detector.
	COM	Design and install in accordance with PS–1; collect data in accordance with subpart A of 40 CFR part 63; determine and record 6-minute block averages.
	Feed/charge material	Record identity of each feed/charge; certify charge materials every 6 months.
Rotary dross cooler with fabric filter.	Bag leak detector or	Install and operate in accordance with ''Fabric Filter Bag Leak Detection Guidance''[c]; record output voltage from bag leak detector.
	COM	Design and install in accordance with PS–1; collect data in accordance with subpart A of 40 CFR part 63; determine and record 6-minute block averages.
In-line fluxer with lime-injected fabric filter.	Bag leak detector or	Install and operate in accordance with ''Fabric Filter Bag Leak Detection Guidance''[c]; record output voltage from bag leak detector.
	COM	Design and install in accordance with PS–1; collect data in accordance with subpart A of 40 CFR part 63; determine and record 6-minute block averages
	Reactive flux injection rate	Weight measurement device accuracy of ±1%[b]; calibrate according to manufacturer's specifications or at least once every 6 months; record time, weight and type of reactive flux added or injected for each 15-minute block period while reactive fluxing occurs; calculate and record total reactive flux injection rate for each operating cycle or time period used in performance test; or Alternative flux injection rate determination procedure per § 63.1510(j)(5).

Affected source/Emission unit	Monitor type/Operation/Process	Monitoring requirements
	Lime injection rate	For continuous injection systems, record feeder setting daily and inspect each feed hopper or silo every 8 hrs to verify that lime is free-flowing; record results of each inspection. If blockage occurs, inspect every 4 hrs for 3 days; return to 8-hour inspections if corrective action results in no further blockage during 3-day period.[d]
In-line fluxer using no reactive flux.	Flux materials	Record flux materials; certify every 6 months for no reactive flux.
Group 1 furnace with lime-injected fabric filter.	Bag leak detector or	Install and operate in accordance with ''Fabric Filter Bag Leak Detection Guidance''[c]; record output voltage from bag leak detector.
	COM	Design and install in accordance with PS–1; collect data in accordance with subpart A of 40 part CFR 63; determine and record 6-minute block averages.
	Lime injection rate	For continuous injection systems, record feeder setting daily and inspect each feed hopper or silo every 8 hours to verify that lime is free-flowing; record results of each inspection. If blockage occurs, inspect every 4 hours for 3 days; return to 8-hour inspections if corrective action results in no further blockage during 3-day period.[d]
	Reactive flux injection rate Weight measurement device accuracy of +1%b; calibrate every 3 months; record weight and type of reactive flux added or injected for each 15-minute block period while reactive fluxing occurs; calculate and record total reactive flux injection rate for each operating cycle or time period used in performance test; or. Alternative flux injection rate determination procedure per § 63.1510(j)(5)..	
	Fabric filter inlet temperature	Continuous measurement device to meet specifications in § 63.1510(h)(2); record temperatures in 15-minute block averages; determine and record 3-hour block averages.
	Maintain molten aluminum level in sidewell furnace.	Maintain aluminum level operating log; certify every 6 months.
Group 1 furnace without add-on controls.	Fluxing in sidewell furnace hearth.	Maintain flux addition operating log; certify every 6 months.
	Reactive flux injection rate	Weight measurement device accuracy of +1%[b]; calibrate according to manufacturers specifications or at least once every six months; record weight and type of reactive flux added or injected for each 15-minute block period while reactive fluxing occurs; calculate and record total reactive flux injection rate for each operating cycle or time period used in performance test.
	OM&M plan (approved by permitting agency).	Demonstration of site-specific monitoring procedures to provide data and show correlation of emissions across the range of charge and flux materials and furnace operating parameters.
	Feed material (melting/holding furnace).	
Record type of permissible feed/charge material; certify charge materials every 6 months..		
Clean (group 2) furnace	Charge and flux materials	Record charge and flux materials; certify every 6 months for clean charge and no reactive flux.

[a] Thermal chip dryers, scrap dryers/delacquering kilns/decoating kilns, dross-only furnaces, in-line fluxers and group 1 furnaces or melting/holding furnaces.

[b] Permitting agency may approve measurement devices of alternative accuracy, for example in cases where flux rates are very low and costs of meters of specified accuracy are prohibitive; or where feed/charge weighing devices of specified accuracy are not practicable due to equipment layout or charging practices.

[c] Non-triboelectric bag leak detectors must be installed and operated in accordance with manufacturers' specifications.

[d] Permitting agency may approve other alternatives including load cells for lime hopper weight, sensors for carrier gas pressure, or HCl monitoring devices at fabric filter outlet.

APPENDIX A TO SUBPART RRR OF PART 63—GENERAL PROVISIONS APPLICABILITY TO SUBPART RRR

Citation	Requirement	Applies to RRR	Comment
§ 63.1(a)(1)–(4)	General Applicability	Yes.	
§ 63.1(a)(5)		No	[Reserved].
§ 63.1(a)(6)–(8)		Yes.	
§ 63.1(a)(9)		No	[Reserved].
§ 63.1(a) (10)–(14)		Yes.	
§ 63.1(b)	Initial Applicability Determination	Yes	EPA retains approval authority.
§ 63.1(c)(1)	Applicability After Standard Established.	Yes.	
§ 63.1(c)(2)		Yes	States have option to exclude area sources from title V permit program.
§ 63.1(c)(3)		No	[Reserved].
§ 63.1(c)(4)–(5)		Yes.	
§ 63.1(d)		No	[Reserved].
§ 63.1(e)	Applicability of Permit Program	Yes.	
§ 63.2	Definitions	Yes	Additional definitions in § 63.1503.
§ 63.3	Units and Abbreviations	Yes	
§ 63.4(a)(1)–(3)	Prohibited Activities	Yes.	
§ 63.4(a)(4)		No	[Reserved]
§ 63.4(a)(5)		Yes.	
§ 63.4(b)–(c)	Circumvention/ Severability	Yes.	
§ 63.5(a)	Construction and Reconstruction—Applicability.	Yes.	
§ 63.5(b)(1)	Existing, New, Reconstructed Sources—Requirements.	Yes.	
§ 63.5(b)(2)		No	[Reserved].
§ 63.5(b)(3)–(6)		Yes.	
§ 63.5(c)		No	[Reserved].
§ 63.5(d)	Application for Approval of Construction/ Reconstruction.	Yes.	
§ 63.5(e)	Approval of Construction/ Reconstruction.	Yes.	
§ 63.5(f)	Approval of Construction/Reconstruction Based on State Review.	Yes.	
§ 63.6(a)	Compliance with Standards and Maintenance—Applicability.	Yes.	
§ 63.6(b)(1)–(5)	New and Reconstructed Sources—Dates.	Yes.	
§ 63.6(b)(6)		No	[Reserved].
§ 63.6(b)(7)		Yes.	
§ 63.6(c)(1)	Existing Sources Dates	Yes	§ 63.1501 specifies dates.
§ 63.6(c)(2)		Yes.	
§ 63.6(c)(3)–(4)		No	[Reserved].
§ 63.6(c)(5)		Yes.	
§ 63.6(d)		No	[Reserved].
§ 63.6(e)(1)–(2)	Operation & Maintenance Requirements.	Yes	§ 63.1510 requires plan.
§ 63.6(e)(3)	Startup, Shutdown, and Malfunction Plan.	Yes.	
§ 63.6(f)	Compliance with Emission Standards.	Yes.	
§ 63.6(g)	Alternative Standard	No	
§ 63.6(h)	Compliance with Opacity/VE Standards.	Yes.	
§ 63.6(i)(1)–(14)	Extension of Compliance	Yes.	
§ 63.6(i)(15)		No	[Reserved].
§ 63.6(i)(16)		Yes.	
§ 63.6(j)	Exemption from Compliance	Yes.	
§ 63.7(a)–(h)	Performance Test Requirements—Applicability and Dates.	Yes	§ 63.1511 requires repeat tests every 5 years for major sources.
§ 63.7(b)	Notification	Yes.	
§ 63.7(c)	Quality Assurance/Test Plan	Yes.	
§ 63.7(d)	Testing Facilities	Yes.	
§ 63.7(e)	Conduct of Tests	Yes.	
§ 63.7(f)	Alternative Test Method	Yes.	
§ 63.7(g)	Data Analysis	Yes.	
§ 63.7(h)	Waiver of Tests	Yes.	

Citation	Requirement	Applies to RRR	Comment
§ 63.8(a)(1)	Monitoring Requirements—Applicability.	Yes.	
§ 63.8(a)(2)		Yes.	
§ 63.8(a)(3)		No	[Reserved]
§ 63.8(a)(4)		Yes	
§ 63.8(b)	Conduct of Monitoring	Yes.	
§ 63.8(c)(1)–(3)	CMS Operation and Maintenance.	Yes.	
§ 63.8(c)(4)–(8)		Yes.	
§ 63.8(d)	Quality Control	Yes.	
§ 63.8(e)	CMS Performance Evaluation	Yes.	
§ 63.8(f)(1)–(5)	Alternative Monitoring Method	No	§ 63.1510(w) includes provisions for monitoring alternatives.
§ 63.8(f)(6)	Alternative to RATA Test	Yes.	
§ 63.8(g)(1)	Data Reduction	Yes.	
§ 63.8(g)(2)		No	§ 63.1512 requires five 6-minute averages for an aluminum scrap shredder.
§ 63.8(g)(3)–(5)		Yes.	
§ 63.9(a)	Notification Requirements—Applicability.	Yes.	
§ 63.9(b)	Initial Notifications	Yes.	
§ 63.9(c)	Request for Compliance Extension.	Yes.	
§ 63.9(d)	New Source Notification for Special Compliance Requirements.	Yes.	
63.9(e)	Notification of Performance Test	Yes.	
§ 63.9(f)	Notification of VE/Opacity Test	Yes.	
§ 63.9(g)	Additional CMS Notifications	Yes.	
§ 63.9(h)(1)–(3)	Notification of Compliance Status	Yes.	
§ 63.9(h)(4)		No	[Reserved].
§ 63.9(h)(5)–(6)		Yes.	
§ 63.9(i)	Adjustment of Deadlines	Yes.	
§ 63.9(j)	Change in Previous Information	Yes.	
§ 63.10(a)	Recordkeeping/Reporting—Applicability.	Yes.	
§ 63.10(b)	General Requirements	Yes	§ 63.1517 includes additional requirements.
§ 63.10(c)(1)	Additional CMS Recordkeeping	Yes.	
§ 63.10(c)(2)–(4)		No	[Reserved].
§ 63.10(c)(5)		Yes.	
§ 63.10(c)(6)		Yes.	
§ 63.10(c)(7)–(8)		Yes.	
§ 63.10(c)(9)		No	[Reserved].
§ 63.10(c) (10)–(13)		Yes.	
§ 63.10(c) (14)		Yes.	
§ 63.10(d)(1)	General Reporting Requirements	Yes.	
§ 63.10(d)(2)	Performance Test Results	Yes.	
§ 63.10(d)(3)	Opacity or VE Observations	Yes.	
§ 63.10(d)(4) –(5)	Progress Reports/Startup, Shutdown, and Malfunction Reports.	Yes.	
§ 63.10(e)(1)–(2)	Additional CMS Reports	Yes.	
§ 63.10(e)(3)	Excess Emissions/CMS Performance Reports.	Yes.	
§ 63.10(e)(4)	COMS Data Reports	Yes.	
§ 63.10(f)	Recordkeeping/Reporting Waiver	Yes.	
§ 63.11(a)–(b)	Control Device Requirements	No	Flares not applicable.
§ 63.12(a)–(c)	State Authority and Delegations	Yes.	EPA retains authority for applicability determinations.
§ 63.13	Addresses	Yes.	
§ 63.14	Incorporation by Reference	Yes.	Chapters 3 and 5 of ACGIH Industrial Ventilation Manual for capture/collection systems.
§ 63.15	Availability of Information/Confidentiality.	Yes.	

EFFECTIVE DATE NOTE: At 67 FR 41124, June 24, 2002, appendix A to subpart RRR was amended by revising the entries for § 63.7(a)–(h) and § 63.9(h)(1)–(3) effective August 13, 2002. For the convenience of the user, the revised text is set forth as follows:

APPENDIX A TO SUBPART RRR OF PART 63.—GENERAL PROVISIONS APPLICABILITY TO SUBPART RRR

Citation	Requirement	Applies to RRR	Comment
* *	*	* *	* *
§ 63.7(a)–(h)	Performance Test Requirements-Applicability and Dates.	Yes	Except § 63.1511 establishes dates for initial performance tests.
* *	*	* *	* *
§ 63.9(h)(1)–(3)	Notification of Compliance Status.	Yes	Except § 63.1515 establishes dates for notification of compliance status reports.
* *	*	* *	* *

Subpart SSS [Reserved]

Subpart TTT—National Emission Standards for Hazardous Air Pollutants for Primary Lead Smelting

SOURCE: 64 FR 30204, June 4, 1999, unless othewise noted.

§ 63.1541 Applicability.

(a) The provisions of this subpart apply to the following affected sources at primary lead smelters: sinter machine, blast furnace, dross furnace, process fugitive sources, and fugitive dust sources. The provisions of this subpart do not apply to secondary lead smelters, lead refiners, or lead remelters.

(b) Table 1 of this subpart specifies the provisions of subpart A that apply and those that do not apply to owners and operators of primary lead smelters. The following sections of part 63 apply to this subpart as stated in subpart A and Table 1: § 63.1 (Applicability), § 63.2 (Definitions), § 63.3 (Units and abbreviations), § 63.4 (Prohibited activities and circumvention), § 63.5 (Construction and reconstruction), § 63.7 (Performance testing requirements), § 63.8 (Monitoring requirements), § 63.12 (State authority and delegations), § 63.13 (Addresses of State air pollution control agencies and EPA Regional Offices), § 63.14 (Incorporations by reference), and § 63.15 (Availability of information confidentiality). The following sections of part 63 apply to the extent specified in this subpart and Table 1: § 63.6 (Compliance with standards and maintenance requirements), § 63.9 (Notification requirements), and § 63.10 (Recordkeeping and reporting requirements). Section § 63.11 (Control device requirements) does not apply to this subpart.

§ 63.1542 Definitions.

Terms used in this subpart are defined in the Act, in subpart A of this part, or in this section as follows:

Bag leak detection system means a system that is capable of continuously monitoring relative particulate matter (dust) loadings in the exhaust of a baghouse in order to detect bag leaks and other upset conditions. A bag leak detection system includes, but is not limited to, an instrument that operates on triboelectric, light scattering, light transmittance, or other effect to continuously monitor relative particulate matter loadings.

Blast furnace means any reduction furnace to which sinter is charged and which forms separate layers of molten slag and lead bullion.

Building means a roofed and walled structure with limited openings to allow access and egress for people and vehicles.

Charging location means the physical opening through which raw materials are introduced into a sinter machine, blast furnace, or dross furnace.

Dross furnace means any smelting furnace to which drosses are charged

and which chemically and physically separates lead from other impurities.

Drossing and refining kettle means an open-top vessel that is constructed of cast iron or steel and is indirectly heated from below and contains molten lead for the purpose of drossing, refining, or alloying lead. Included are pot furnaces, receiving kettles, and holding kettles.

Fugitive dust source means a stationary source of hazardous air pollutant emissions at a primary lead smelter resulting from the handling, storage, transfer, or other management of lead-bearing materials where the source is not associated with a specific process, process vent, or stack. Fugitive dust sources include roadways, storage piles, materials handling transfer points, and materials transport areas.

Furnace area means any area of a primary lead smelter in which a blast furnace or dross furnace is located.

Malfunction means any sudden, infrequent, and not reasonably preventable failure of air pollution control equipment, process equipment, or a process to operate in a normal or usual manner. Failures that are caused in part by poor maintenance or careless operation are not malfunctions.

Materials storage and handling area means any area of a primary lead smelter in which lead-bearing materials (including ore concentrate, sinter, granulated lead, dross, slag, and flue dust) are stored or handled between process steps, including areas in which materials are stored in piles, bins, or tubs, and areas in which material is prepared for charging to a sinter machine or smelting furnace.

Operating time means the period of time in hours that an affected source is in operation beginning at a startup and ending at the next shutdown.

Plant operating time means the period of time in hours that either a sinter machine or blast furnace is in operation.

Plant roadway means any area of a primary lead smelter that is subject to vehicle traffic, including traffic by fork lifts, front-end loaders, or vehicles carrying ore concentrates or cast lead ingots. Excluded from this definition are employee and visitor parking areas, provided they are not subject to traffic by vehicles carrying lead-bearing materials.

Primary lead smelter means any facility engaged in the production of lead metal from lead sulfide ore concentrates through the use of pyrometallurgical techniques.

Process fugitive source means a source of hazardous air pollutant emissions at a primary lead smelter that is associated with lead smelting or refining but is not the primary exhaust stream and is not a fugitive dust source. Process fugitive sources include sinter machine charging locations, sinter machine discharge locations, sinter crushing and sizing equipment, furnace charging locations, furnace taps, drossing kettles, and refining kettles.

Refining and casting area means any area of a primary lead smelter in which drossing or refining operations occur, or casting operations occur.

Shutdown means the cessation of operation of an affected source for any purpose.

Sinter machine means any device in which a lead sulfide ore concentrate charge is heated in the presence of air to eliminate sulfur contained in the charge and to agglomerate the charge into a hard porous mass called sinter.

Sinter machine area means any area of a primary lead smelter where a sinter machine, or sinter crushing and sizing equipment is located.

Sinter machine discharge end means the physical opening at the end of a sinter machine where the sinter exits the sinter machine.

Startup means the setting in operation of an affected source for any purpose.

Tapping location means the opening thru which lead and slag are removed from the furnace.

§ 63.1543 Standards for process and process fugitive sources.

(a) No owner or operator of any existing, new, or reconstructed primary lead smelter shall discharge or cause to be discharged into the atmosphere lead compounds in excess of 500 grams of lead per megagram of lead metal produced (1.0 pounds of lead per ton of lead metal produced) from the aggregation of emissions discharged from the air

pollution control devices used to control emissions from the sources listed in paragraphs (a)(1) through (a)(9) of this section.

(1) Sinter machine;

(2) Blast furnace;

(3) Dross furnace;

(4) Dross furnace charging location;

(5) Blast furnace and dross furnace tapping location;

(6) Sinter machine charging location;

(7) Sinter machine discharge end;

(8) Sinter crushing and sizing equipment; and

(9) Sinter machine area.

(b) The process fugitive sources listed in paragraphs (a)(4) through (a)(8) of this section shall be equipped with a hood and shall be ventilated to a baghouse or equivalent control device. The hood design and ventilation rate shall be consistent with American Conference of Governmental Industrial Hygienists recommended practices.

(c) The sinter machine area shall be enclosed in a building that is ventilated to a baghouse or equivalent control device at a rate that maintains a positive in-draft through any doorway opening.

(d) Except as provided in paragraph (e) of this section, following the initial test to demonstrate compliance with paragraph (a) of this section, the owner or operator of a primary lead smelter shall conduct a compliance test for lead compounds on an annual basis (no later than 12 calendar months following any previous compliance test).

(e) If the three most recent compliance tests demonstrate compliance with the emission limit specified in paragraph (a) of this section, the owner or operator of a primary lead smelter shall be allowed up to 24 calendar months from the last compliance test to conduct the next compliance test for lead compounds.

(f) The owner or operator of a primary lead smelter shall maintain and operate each baghouse used to control emissions from the sources listed in paragraphs (a)(1) through (a)(9) of this section such that the alarm on a bag leak detection system required under § 63.1547(c)(9) does not sound for more than five percent of the total operating time in a 6-month reporting period.

(g) The owner or operator of a primary lead smelter shall record the date and time of a bag leak detection system alarm and initiate procedures to determine the cause of the alarm according to the corrective action plan required under § 63.1547(c)(9) within 1 hour of the alarm. The cause of the alarm shall be corrected as soon as practicable.

§ 63.1544 Standards for fugitive dust sources.

(a) Each owner or operator of a primary lead smelter shall prepare, and at all times operate according to, a standard operating procedures manual that describes in detail the measures that will be put in place to control fugitive dust emissions from the sources listed in paragraphs (a)(1) through (a)(5) of this section:

(1) Plant roadways;

(2) Material storage and handling area(s);

(3) Sinter machine area(s);

(4) Furnace area(s); and

(5) Refining and casting area(s).

(b) Not withstanding paragraph (c) of this section, the standard operating procedures manual shall be submitted to the Administrator or delegated authority for review and approval.

(c) Existing manuals that describe the measures in place to control fugitive dust sources required as part of a State implementation plan for lead shall satisfy the requirements of paragraph (a) of this section provided they address the sources listed in paragraphs (a)(1) through (a)(5) of this section.

§ 63.1545 Compliance dates.

(a) Each owner or operator of an existing primary lead smelter shall achieve compliance with the requirements of this subpart no later than May 4, 2001.

(b) Each owner or operator of a primary lead smelter that commences construction or reconstruction after April 17, 1998, shall achieve compliance with the requirements of this subpart by June 4, 1999 or upon startup of operations, whichever is later.

§ 63.1546 Test methods.

(a) The following procedure shall be used to determine compliance with the emissions standard for lead compounds under § 63.1543(a):

(1) The lead compound emission rate, in units of grams of lead per hour, for each source listed in § 63.1543(a)(1) through § 63.1543(a)(9) shall be determined according to the following test methods in appendix A of part 60 of this chapter:

(i) Method 1 shall be used to select the sampling port location and the number of traverse points.

(ii) Method 2 shall be used to measure volumetric flow rate.

(iii) Method 3 shall be used for gas analysis.

(iv) Method 4 shall be used to determine moisture content of the stack gas

(v) Method 12 shall be used to measure the lead emission rate of the stack gas. The minimum sample volume shall be 0.85 dry standard cubic meters (30 dry standard cubic feet) and the minimum sampling time shall be 60 minutes for each run. Three runs shall be performed and the average of the three runs shall be used to determine compliance.

(2) The lead production rate, in units of megagrams per hour, shall be determined based on production data for the previous 12 calendar months according to the procedures detailed in paragraphs (a)(2)(i) through (a)(2)(v) of this section:

(i) Total lead products production multiplied by the fractional lead content shall be determined in units of megragrams.

(ii) Total copper matte production multiplied by the fractional lead content shall be determined in units of megragrams.

(iii) Total copper speiss production multiplied by the fractional lead content shall be determined in units of megragrams.

(iv) Total lead production shall be determined by summing the values obtained in paragraphs (a)(2)(i) through (a)(2)(iii) of this section.

(v) The lead production rate, in units of megragrams per hours, shall be calculated based on the total lead production, as determined in accordance with paragraph (a)(2)(iv) of this section, divided by the total plant operating time, in hours, for the previous 12 months.

(3) The sum of lead compound emission rates for the sources in § 63.1543(a)((1) through (a)(9), as determined in accordance with paragraph (a)(1) of this section, shall be divided by the lead production rate, as determined in accordance with paragraph (a)(2)(v) of this section, to obtain a production-based, lead compound emission rate in units of grams of lead per megagram of lead metal produced. The production-based, lead compound emission rate shall be used to determine compliance with the emissions standard for lead compounds under § 63.1543(a).

(b) Owner and operators shall perform an initial compliance test to demonstrate compliance with the sinter building in-draft requirements of § 63.1543(c) at each doorway opening in accordance with paragraphs (b)(1) through (b)(4) of this section.

(1) Use a propeller anemometer or equivalent device.

(2) Determine doorway in-draft by placing the anemometer in the plane of the doorway opening near its center.

(3) Determine doorway in-draft for each doorway that is open during normal operation with all remaining doorways in their customary position during normal operation.

(4) Do not determine doorway in-draft when ambient wind speed exceeds 2 meters per second.

§ 63.1547 Monitoring requirements.

(a) Owners and operators of primary lead smelters shall prepare, and at all times operate according to, a standard operating procedures manual that describes in detail the procedures for inspection, maintenance, and bag leak detection and corrective action for all baghouses that are used to control process, process fugitive, or fugitive dust emissions from any source subject to the lead emission standards in §§ 63.1543 and 63.1544, including those used to control emissions from general ventilation systems.

(b) The standard operating procedures manual for baghouses required by paragraph (a) of this section shall be

submitted to the Administrator or delegated authority for review and approval.

(c) The procedures specified in the standard operating procedures manual for inspections and routine maintenance shall, at a minimum, include the requirements of paragraphs (c)(1) through (c)(9) of this section.

(1) Daily monitoring of pressure drop across each baghouse cell to ensure pressure drop is within the normal operating range identified in the standard operating procedures manual.

(2) Weekly confirmation that dust is being removed from hoppers through visual inspection or equivalent means of ensuring the proper functioning of removal mechanisms.

(3) Daily check of compressed air supply for pulse-jet baghouses.

(4) An appropriate methodology for monitoring cleaning cycles to ensure proper operation.

(5) Monthly check of bag cleaning mechanisms for proper functioning through visual inspection or equivalent means.

(6) Quarterly visual check of bag tension on reverse air and shaker-type baghouses to ensure that bags are not kinked (kneed or bent) or laying on their sides. Such checks are not required for shaker-type baghouses using self-tensioning (spring loaded) devices.

(7) Quarterly confirmation of the physical integrity of the baghouse through visual inspection of the baghouse interior for air leaks.

(8) Quarterly inspection of fans for wear, material buildup, and corrosion through visual inspection, vibration detectors, or equivalent means.

(9) Except as provided in paragraph (h) of this section, continuous operation of a bag leak detection system.

(d) The procedures specified in the standard operating procedures manual for maintenance shall, at a minimum, include a preventative maintenance schedule that is consistent with the baghouse manufacturer's instructions for routine and long-term maintenance.

(e) The bag leak detection system required by paragraph (c)(9) of this section shall meet the specifications and requirements of (e)(1) through (e)(8) of this section.

(1) The bag leak detection system must be certified by the manufacturer to be capable of detecting particulate matter emissions at concentrations of 10 milligram per actual cubic meter (0.0044 grains per actual cubic foot) or less.

(2) The bag leak detection system sensor must provide output of relative particulate matter loadings, and the owner or operator shall continuously record the output from the bag leak detection system.

(3) The bag leak detection system must be equipped with an alarm system that will sound when an increase in relative particulate loading is detected over a preset level, and the alarm must be located such that it can be heard by the appropriate plant personnel.

(4) Each bag leak detection system that works based on the triboelectric effect shall be installed, calibrated, and maintained in a manner consistent with guidance provided in the U.S. Environmental Protection Agency guidance document ''Fabric Filter Bag Leak Detection Guidance'' (EPA–454/R–98–015). Other bag leak detection systems shall be installed, calibrated, and maintained in a manner consistent with the manufacturer's written specifications and recommendations.

(5) The initial adjustment of the system shall, at a minimum, consist of establishing the baseline output by adjusting the sensitivity (range) and the averaging period of the device, and establishing the alarm set points and the alarm delay time.

(6) Following initial adjustment, the owner or operator shall not adjust the sensitivity or range, averaging period, alarm set points, or alarm delay time, except as detailed in the approved SOP required under paragraph (a) of this section. In no event shall the sensitivity be increased by more than 100 percent or decreased more than 50 percent over a 365-day period unless a responsible official certifies that the baghouse has been inspected and found to be in good operating condition.

(7) For negative pressure, induced air baghouses, and positive pressure baghouses that are discharged to the atmosphere through a stack, the bag

leak detector must be installed downstream of the baghouse and upstream of any wet acid gas scrubber.

(8) Where multiple detectors are required, the system's instrumentation and alarm may be shared among detectors.

(f) The standard operating procedures manual required by paragraph (a) of this section shall include a corrective action plan that specifies the procedures to be followed in the event of a bag leak detection system alarm. The corrective action plan shall include, at a minimum, procedures to be used to determine the cause of an alarm, as well as actions to be taken to minimize emissions, which may include, but are not limited to, the following.

(1) Inspecting the baghouse for air leaks, torn or broken bags or filter media, or any other condition that may cause an increase in emissions.

(2) Sealing off defective bags or filter media.

(3) Replacing defective bags or filter media, or otherwise repairing the control device.

(4) Sealing off a defective baghouse compartment.

(5) Cleaning the bag leak detection system probe, or otherwise repairing the bag leak detection system.

(6) Shutting down the process producing the particulate emissions.

(g) The percentage of total operating time the alarm on the bag leak detection system sounds in a 6-month reporting period shall be calculated in order to determine compliance with the five percent operating limit in §63.1543(f). The percentage of time the alarm on the bag leak detection system sounds shall be determined according to paragraphs (g)(1) through (g)(5) of this section.

(1) Alarms that occur due solely to a malfunction of the bag leak detection system shall not be included in the calculation.

(2) Alarms that occur during startup, shutdown, or malfunction shall not be included in the calculation if the condition is described in the startup, shutdown, and malfunction plan and the owner or operator follows all the procedures in the plan defined for this condition.

(3) For each alarm where the owner or operator initiates procedures to determine the cause of an alarm within 1 hour of the alarm, 1 hour of alarm time shall be counted.

(4) For each alarm where the owner or operator does not initiate procedures to determine the cause of the alarm within 1 hour of the alarm, alarm time will be counted as the actual amount of time taken by the owner or operator to initiate procedures to determine the cause of the alarm.

(5) The percentage of time the alarm on the bag leak detection system sounds shall be calculated as the ratio of the sum of alarm times to the total operating time multiplied by 100.

(h) Baghouses equipped with HEPA filters as a secondary filter used to control process or process fugitive sources subject to the lead emission standards in §63.1543 are exempt from the requirement in §63.1543(c)(9) to be equipped with a bag leak detector. The owner or operator of an affected source that uses a HEPA filter shall monitor and record the pressure drop across the HEPA filter system daily. If the pressure drop is outside the limit(s) specified by the filter manufacturer, the owner or operator must take appropriate corrective measures, which may include, but not be limited to, the following:

(1) Inspecting the filter and filter housing for air leaks and torn or broken filters.

(2) Replacing defective filter media, or otherwise repairing the control device.

(3) Sealing off a defective control device by routing air to other control devices.

(4) Shutting down the process producing the particulate emissions.

(i) Owners and operators shall monitor sinter machine building in-draft to demonstrate continued compliance with the operating standard specified in §63.1543(c) in accordance with either paragraph (i)(1), (i)(2), or (i)(3) of this section.

(1) Owners and operators shall check and record on a daily basis doorway in-draft at each doorway in accordance with the methodology specified in §63.1546(b).

(2) Owners and operators shall establish and maintain baseline ventilation parameters which result in a positive in-draft according to paragraphs (i)(2)(i) through (i)(2)(iv) of this section.

(i) Owners and operators shall install, calibrate, maintain, and operate a monitoring device that continuously records the actual volumetric flow rate through each separately ducted hood; or install, calibrate, maintain, and operate a monitoring device that continuously records the volumetric flow rate at the control device inlet of each exhaust system ventilating the building. The flow rate monitoring device(s) can be installed in any location in the exhaust duct such that reproducible flow rate monitoring will result. The flow rate monitoring device(s) shall have an accuracy of plus or minus 10 percent over its normal operating range and shall be calibrated according to manufacturer's instructions.

(ii) During the initial demonstration of sinter building in-draft, and at any time the owner or operator wishes to re-establish the baseline ventilation parameters, the owner or operator shall continuously record the volumetric flow rate through each separately ducted hood, or continuously record the volumetric flow rate at the control device inlet of each exhaust system ventilating the building and record exhaust system damper positions. The owner or operator shall determine the average volumetric flow rate(s) corresponding to the period of time the in-draft compliance determinations are being conducted.

(iii) The owner or operator shall maintain the volumetric flow rate(s) at or above the value(s) established during the most recent in-draft determination at all times the sinter machine is in operation. Volumetric flow rate(s) shall be calculated as a 15-minute average.

(iv) If the volumetric flow rate is monitored at the control device inlet, the owner or operator shall check and record damper positions daily to ensure they are in the positions they were in during the most recent in-draft determination.

(3) An owner or operator may request an alternative monitoring method by following the procedures and requirements in § 63.8(f) of the General Provisions.

§ 63.1548 Notification requirements.

(a) The owner or operator of a primary lead smelter shall comply with all of the notification requirements of § 63.9 of subpart A, General Provisions.

(b) The owner or operator of a primary lead smelter shall submit the fugitive dust control standard operating procedures manual required under § 63.1544(a) and the standard operating procedures manual for baghouses required under § 63.1547(a) to the Administrator or delegated authority along with a notification that the smelter is seeking review and approval of these plans and procedures. Owners or operators of existing primary lead smelters shall submit this notification no later than November 6, 2000. The owner or operator of a primary lead smelter that commences construction or reconstruction after April 17, 1998, shall submit this notification no later than 180 days before startup of the constructed or reconstructed primary lead smelter, but no sooner than September 2, 1999.

§ 63.1549 Recordkeeping and reporting requirements.

(a) The owner or operator of a primary lead smelter shall comply with all of the recordkeeping requirements of § 63.10 of subpart A, General Provisions.

(b) In addition to the general records required by paragraph (a) of this section, each owner or operator of a primary lead smelter shall maintain for a period of 5 years, records of the information listed in paragraphs (b)(1) through (b)(8) of this section.

(1) Production records of the weight and lead content of lead products, copper matte, and copper speiss.

(2) Records of the bag leak detection system output.

(3) An identification of the date and time of all bag leak detection system alarms, the time that procedures to determine the cause of the alarm were initiated, the cause of the alarm, an explanation of the actions taken, and the date and time the cause of the alarm was corrected.

(4) Any recordkeeping required as part of the practices described in the standard operating procedures manual required under §63.1544(a) for the control of fugitive dust emissions.

(5) Any recorkeeping required as part of the practices described in the standard operating procedures manual for baghouses required under §63.1547(a).

(6) If an owner or operator chooses to demonstrate continuous compliance with the sinter building in-draft requirement under §63.1543(c) by employing the method allowed in §63.1546(i)(1), the records of the daily doorway in-draft checks, an identification of the periods when there was not a positive in-draft, and an explanation of the corrective actions taken.

(7) If an owner or operator chooses to demonstrate continuous compliance with the sinter building in-draft requirement under §63.1543(c) by employing the method allowed in §63.1546(i)(2), the records of the output from the continuous volumetric flow monitor(s), an identification of the periods when the 15-minute volumetric flow rate dropped below the minimum established during the most recent in-draft determination, and an explanation of the corrective actions taken.

(8) If an owner or operator chooses to demonstrate continuous compliance with the sinter building in-draft requirement under §63.1543(c) by employing the method allowed in §63.1546(i)(2), and volumetric flow rate is monitored at the baghouse inlet, records of the daily checks of damper positions, an identification of the days that the damper positions were not in the positions established during the most recent in-draft determination, and an explanation of the corrective actions taken.

(c) Records for the most recent 2 years of operation must be maintained on site. Records for the previous 3 years may be maintained off site.

(d) The owner or operator of a primary lead smelter shall comply with all of the reporting requirements of §63.10 of subpart A, General Provisions.

(e) In addition to the information required under §63.10 of the General Provisions, the owner or operator shall provide semi-annual reports containing the information specified in paragraphs (e)(1) through (e)(7) of this section to the Administrator or designated authority.

(1) The reports shall include records of all alarms from the bag leak detection system specified in §63.1547(e).

(2) The reports shall include a description of the actions taken following each bag leak detection system alarm pursuant to §63.1547(f).

(3) The reports shall include a calculation of the percentage of time the alarm on the bag leak detection system sounded during the reporting period pursuant to §63.1547(g).

(4) If an owner or operator chooses to demonstrate continuous compliance with the sinter building in-draft requirement under §63.1543(c) by employing the method allowed in §63.1546(i)(1), the reports shall contain an identification of the periods when there was not a positive in-draft, and an explanation of the corrective actions taken.

(5) If an owner or operator chooses to demonstrate continuous compliance with the sinter building in-draft requirement under §63.1543(c) by employing the method allowed in §63.1546(i)(2), the reports shall contain an identification of the periods when the 15-minute volumetric flow rate(s) dropped below the minimum established during the most recent in-draft determination, and an explanation of the corrective actions taken.

(6) If an owner or operator chooses to demonstrate continuous compliance with the sinter building in-draft requirement under §63.1543(c) by employing the method allowed in §63.1546(i)(2), and volumetric flow rate is monitored at the baghouse inlet, the reports shall contain an identification of the days that the damper positions were not in the positions established during the most recent in-draft determination, and an explanation of the corrective actions taken.

(7) The reports shall contain a summary of the records maintained as part of the practices described in the standard operating procedures manual for baghouses required under §63.1547(a), including an explanation of the periods when the procedures were not followed and the corrective actions taken.

(8) The reports shall contain a summary of the fugitive dust control measures performed during the required reporting period, including an explanation of any periods when the procedures outlined in the standard operating procedures manual required by § 63.1544(a) were not followed and the corrective actions taken. The reports shall not contain copies of the daily records required to demonstrate compliance with the requirements of the standard operating procedures manuals required under §§ 63.1544(a) and § 63.1547(a).

§ 63.1550 Delegation of authority

(a) In delegating implementation and enforcement authority to a State under section 112(1) of the act, the authorities contained in paragraph (b) of this section shall be retained by the Administrator and not transferred to a State.

(b) Authorities which will not be delegated to States: no restrictions.

TABLE 1 TO SUBPART TTT OF PART 63—SUMMARY OF MONITORING REQUIREMENTS FOR NEW AND EXISTING AFFECTED SOURCES AND EMISSION UNITS

Reference	Applies to subpart TTT	Comment
§ 63.1	Yes	
§ 63.2	Yes	
§ 63.3	Yes	
§ 63.4	Yes	
§ 63.5	Yes	
§ 63.6(a), (b), (c), (e), (f), (g), (i) and (j)	Yes	
§ 63.6(d) and (h)	No	No opacity limits in rule.
§ 63.7	Yes	
§ 63.8	Yes	
§ 63.9 (a), (b), (c), (d), (e), (g), (h)(1) through (3), (h)(5) and (6), (i) and (j).	Yes	
§ 63.9(f) and (h)(4)	No	No opacity or visible emission limits in rule.
§ 63.10	Yes	
§ 63.11	No	Flares will not be used to comply with the emission limits.
§ 63.12 through 63.15	Yes	

Subpart UUU—National Emission Standards for Hazardous Air Pollutants for Petroleum Refineries: Catalytic Cracking Units, Catalytic Reforming Units, and Sulfur Recovery Units

SOURCE: 67 FR 17773, Apr. 11, 2002, unless otherwise noted.

WHAT THIS SUBPART COVERS

§ 63.1560 What is the purpose of this subpart?

This subpart establishes national emission standards for hazardous air pollutants (HAP) emitted from petroleum refineries. This subpart also establishes requirements to demonstrate initial and continuous compliance with the emission limitations and work practice standards.

§ 63.1561 Am I subject to this subpart?

(a) You are subject to this subpart if you own or operate a petroleum refinery that is located at a major source of HAP emissions.

(1) A petroleum refinery is an establishment engaged primarily in petroleum refining as defined in the Standard Industrial Classification (SIC) code 2911 and the North American Industry Classification (NAIC) code 32411, and used mainly for:

(i) Producing transportation fuels (such as gasoline, diesel fuels, and jet fuels), heating fuels (such as kerosene, fuel gas distillate, and fuel oils), or lubricants;

(ii) Separating petroleum; or

(iii) Separating, cracking, reacting, or reforming an intermediate petroleum stream, or recovering a by-product(s) from the intermediate petroleum stream (e.g., sulfur recovery).

(2) A major source of HAP is a plant site that emits or has the potential to

emit any single HAP at a rate of 9.07 megagrams (10 tons) or more per year or any combination of HAP at a rate of 22.68 megagrams (25 tons) or more per year.

(b) [Reserved]

§ 63.1562 What parts of my plant are covered by this subpart?

(a) This subpart applies to each new, reconstructed, or existing affected source at a petroleum refinery.

(b) The affected sources are:

(1) Each catalytic cracking unit that regenerates catalyst.

(2) Each catalytic reforming unit that regenerates catalyst.

(3) Each sulfur recovery unit and the tail gas treatment unit serving it.

(4) Each bypass line serving a new, existing, or reconstructed catalytic cracking unit, catalytic reforming unit, or sulfur recovery unit. This means each vent system that contains a bypass line (e.g., ductwork) that could divert an affected vent stream away from a control device used to comply with the requirements of this subpart.

(c) An affected source is a new affected source if you commence construction of the affected source after September 11, 1998, and you meet the applicability criteria in § 63.1561 at the time you commenced construction.

(d) Any affected source is reconstructed if you meet the criteria in § 63.2.

(e) An affected source is existing if it is not new or reconstructed.

(f) This subpart does not apply to:

(1) A thermal catalytic cracking unit.

(2) A sulfur recovery unit that does not recover elemental sulfur or where the modified reaction is carried out in a water solution which contains a metal ion capable of oxidizing the sulfide ion to sulfur (e.g., the LO–CAT II process).

(3) A redundant sulfur recovery unit not located at a petroleum refinery and used by the refinery only for emergency or maintenance backup.

(4) Equipment associated with bypass lines such as low leg drains, high point bleed, analyzer vents, open-ended valves or lines, or pressure relief valves needed for safety reasons.

(5) Gaseous streams routed to a fuel gas system.

§ 63.1563 When do I have to comply with this subpart?

(a) If you have a new or reconstructed affected source, you must comply with this subpart according to the requirements in paragraphs (a)(1) and (2) of this section.

(1) If you startup your affected source before April 11, 2002, then you must comply with the emission limitations and work practice standards for new and reconstructed sources in this subpart no later than April 11, 2002.

(2) If you startup your affected source after April 11, 2002, you must comply with the emission limitations and work practice standards for new and reconstructed sources in this subpart upon startup of your affected source.

(b) If you have an existing affected source, you must comply with the emission limitations and work practice standards for existing affected sources in this subpart by no later than April 11, 2005 except as specified in paragraph (c) of this section.

(c) We will grant an extension of compliance for an existing catalytic cracking unit allowing additional time to meet the emission limitations and work practice standards for catalytic cracking units in §§ 63.1564 and 63.1565 if you commit to hydrotreating the catalytic cracking unit feedstock and to meeting the emission limitations of this subpart on the same date that your facility meets the final Tier 2 gasoline sulfur control standard (40 CFR part 80, subpart J). To obtain an extension, you must submit a written notification to your permitting authority according to the requirements in § 63.1574(e). Your notification must include the information in paragraphs (c)(1) and (2) of this section.

(1) Identification of the affected source with a brief description of the controls to be installed (if needed) to comply with the emission limitations for catalytic cracking units in this subpart.

(2) A compliance schedule, including the information in paragraphs (c)(2)(i) through (iv) of this section.

(i) The date by which onsite construction or the process change is to be initiated.

(ii) The date by which onsite construction or the process change is to be completed.

(iii) The date by which your facility will achieve final compliance with both the final Tier 2 gasoline sulfur control standard as specified in § 80.195, and the emission limitations and work practice standards for catalytic cracking units in this subpart. In no case will your permitting authority grant an extension beyond the date you are required to meet the Tier 2 gasoline sulfur control standard or December 31, 2009, whichever comes first. If you don't comply with the emission limitations and work practice standards for existing catalytic cracking units by the specified date, you will be out-of-compliance with the requirements for catalytic cracking units beginning April 11, 2005.

(iv) A brief description of interim emission control measures that will be taken to ensure proper operation and maintenance of the process equipment during the period of the compliance extension.

(d) If you have an area source that increases its emissions or its potential to emit such that it becomes a major source of HAP, the requirements in paragraphs (d)(1) and (2) of this section apply.

(1) Any portion of the existing facility that is a new affected source or a new reconstructed source must be in compliance with the requirements of this subpart upon startup.

(2) All other parts of the source must be in compliance with the requirements of this subpart by no later than 3 years after it becomes a major source or, if applicable, the extended compliance date granted according to the requirements in paragraph (c) of this section.

(e) You must meet the notification requirements in § 63.1574 according to the schedule in § 63.1574 and in 40 CFR part 63, subpart A. Some of the notifications must be submitted before the date you are required to comply with the emission limitations and work practice standards in this subpart.

CATALYTIC CRACKING UNITS, CATALYTIC REFORMING UNITS, SULFUR RECOVERY UNITS, AND BYPASS LINES

§ 63.1564 What are my requirements for metal HAP emissions from catalytic cracking units?

(a) *What emission limitations and work practice standards must I meet?* You must:

(1) Meet each emission limitation in Table 1 of this subpart that applies to you. If your catalytic cracking unit is subject to the NSPS for PM in § 60.102 of this chapter, you must meet the emission limitations for NSPS units. If your catalytic cracking unit isn't subject to the NSPS for PM, you can choose from the four options in paragraphs (a)(1)(i) through (iv) of this section:

(i) You can elect to comply with the NSPS requirements (Option 1);

(ii) You can elect to comply with the PM emission limit (Option 2);

(iii) You can elect to comply with the Nickel (Ni) lb/hr emission limit (Option 3); or

(iv) You can elect to comply with the Ni lb/1,000 lbs of coke burn-off emission limit (Option 4).

(2) Comply with each operating limit in Table 2 of this subpart that applies to you.

(3) Prepare an operation, maintenance, and monitoring plan according to the requirements in § 63.1574(f) and operate at all times according to the procedures in the plan.

(4) The emission limitations and operating limits for metal HAP emissions from catalytic cracking units required in paragraphs (a)(1) and (2) of this section do not apply during periods of planned maintenance preapproved by the applicable permitting authority according to the requirements in § 63.1575(j).

(b) *How do I demonstrate initial compliance with the emission limitations and work practice standard?* You must:

(1) Install, operate, and maintain a continuous monitoring system(s) according to the requirements in § 63.1572 and Table 3 of this subpart.

(2) Conduct a performance test for each catalytic cracking unit not subject to the NSPS for PM according to the requirements in § 63.1571 and under

the conditions specified in Table 4 of this subpart.

(3) Establish each site-specific operating limit in Table 2 of this subpart that applies to you according to the procedures in Table 4 of this subpart.

(4) Use the procedures in paragraphs (b)(4)(i) through (iv) of this section to determine initial compliance with the emission limitations.

(i) If you elect Option 1 in paragraph (a)(1)(i) of ths section, the NSPS requirements, compute the PM emission rate (lb/1,000 lbs of coke burn-off) for each run using Equations 1, 2, and 3 (if applicable) of this section as follows:

$$R_c = K_1 Q_r \left(\%CO_2 + \%CO\right) + K_2 Q_a - K_3 Q_r \left[\left(\%CO/2\right) + \%CO_2 + \%O_2\right] + K_3 Q_{oxy}\left(\%O_{xy}\right) \qquad \text{(Eq. 1)}$$

Where:

R_c = Coke burn-off rate, kg/hr (lb/hr);

Q_r = Volumetric flow rate of exhaust gas from catalyst regenerator before adding air or gas streams. Example: You may measure after an electrostatic precipitator, but you must measure before a carbon monoxide boiler, dscm/min (dscf/min);

Q_a = Volumetric flow rate of air to catalytic cracking unit catalyst regenerator, as determined from instruments in the catalytic cracking unit control room, dscm/min (dscf/min);

$\%CO_2$ = Carbon dioxide concentration in regenerator exhaust, percent by volume (dry basis);

%CO = Carbon monoxide concentration in regenerator exhaust, percent by volume (dry basis);

$\%O_2$ = Oxygen concentration in regenerator exhaust, percent by volume (dry basis);

K_1 = Material balance and conversion factor, 0.2982 (kg-min)/(hr-dscm-%) (0.0186 (lb-min)/(hr-dscf-%));

K_2 = Material balance and conversion factor, 2.088 (kg-min)/(hr-dscm) (0.1303 (lb-min)/(hr-dscf));

K_3 = Material balance and conversion factor, 0.0994 (kg-min)/(hr-dscm-%) (0.0062 (lb-min)/(hr-dscf-%));

Q_{oxy} = Volumetric flow rate of oxygen-enriched air stream to regenerator, as determined from instruments in the catalytic cracking unit control room, dscm/min (dscf/min); and

$\%O_{xy}$ = Oxygen concentration in oxygen-enriched air stream, percent by volume (dry basis).

$$E = \frac{K \times C_s \times Q_{sd}}{R_c} \qquad \text{(Eq. 2)}$$

Where:

E = Emission rate of PM, kg/1,000 kg (lb/1,000 lb) of coke burn-off;

C_s = Concentration of PM, g/dscm (lb/dscf);

Q_{sd} = Volumetric flow rate of the catalytic cracking unit catalyst regenerator flue gas as measured by Method 2 in appendix A to part 60 of this chapter, dscm/hr (dscf/hr);

R_c = Coke burn-off rate, kg coke/hr (1,000 lb coke/hr); and

K = Conversion factor, 1.0 (kg^2/g)/(1,000 kg) (1,000 lb/(1,000 lb)).

$$E_s = 1.0 + A\left(H/R_c\right)K' \qquad \text{(Eq. 3)}$$

Where:

E_s = Emission rate of PM allowed, kg/1,000 kg (lb/1,000 lb) of coke burn-off in catalyst regenerator;

1.0 = Emission limitation, kg coke/1,000 kg (lb coke/1,000 lb);

A = Allowable incremental rate of PM emissions, 0.18 g/million cal (0.10 lb/million Btu); and

H = Heat input rate from solid or liquid fossil fuel, million cal/hr (million Btu/hr). Make sure your permitting authority approves procedures for determining the heat input rate.

R_c = Coke burn-off rate, kg coke/hr (1,000 lb coke/hr) determined using Equation 1 of this section; and

K′ = Conversion factor to units to standard, 1.0 (kg^2/g)/(1,000 kg) (10^3 lb/(1,000 lb)).

(ii) If you elect Option 2 in paragraph (a)(1)(ii) of this section, the PM emission limit, compute your PM emission rate (lb/1,000 lbs of coke burn-off) using Equations 1 and 2 of this section and your site-specific opacity operating limit (if you use a continuous opacity

monitoring system) using Equation 4 of this section as follows:

$$\text{Opacity Limit} = \text{Opacity}_{st} \times \left(\frac{1 \text{ lb/klb coke burn}}{\text{PMEmR}_{st}} \right) \qquad \text{(Eq. 4)}$$

Where:

Opacity limit = Maximum permissible hourly average opacity, percent, or 10 percent, whichever is greater;

Opacity_{st} = Hourly average opacity measured during the source test runs, percent; and

PMEmR_{st} = PM emission rate measured during the source test, lb/1,000 lbs coke burn.

$$E_{Ni_1} = C_{Ni} \times Q_{sd} \qquad \text{(Eq. 5)}$$

(iii) If you elect Option 3 in paragraph (a)(1)(iii) of this section, the Ni lb/hr emission limit, compute your Ni emission rate using Equation 5 of this section and your site-specific Ni operating limit (if you use a continuous opacity monitoring system) using Equations 6 and 7 of this section as follows:

Where:

E_{Ni1} = Mass emission rate of Ni, mg/hr (lb/hr); and

C_{Ni} = Ni concentration in the catalytic cracking unit catalyst regenerator flue gas as measured by Method 29 in appendix A to part 60 of this chapter, mg/dscm (lbs/dscf).

$$\text{Opacity}_1 = \frac{13 \text{ g Ni/hr}}{\text{NiEmR1}_{st}} \times \text{Opacity}_{st} \qquad \text{(Eq. 6)}$$

Where:

Opacity_1 = Opacity value for use in Equation 7 of this section, percent, or 10 percent, whichever is greater; and

NiEmR1_{st} = Average Ni emission rate calculated as the arithmetic average Ni emission rate using Equation 5 of this section for each of the performance test runs, g Ni/hr.

$$\text{Ni Operating Limit}_1 = \text{Opacity}_1 \times Q_{mon,st} \times \text{E-Cat}_{st} \qquad \text{(Eq. 7)}$$

Where:

Ni operating limit_1 = Maximum permissible hourly average Ni operating limit, percent-acfm-ppmw, i.e., your site-specific Ni operating limit;

$Q_{mon,st}$ = Hourly average actual gas flow rate as measured by the continuous parameter monitoring system during the performance test or using the alternative procedure in § 63.1573, acfm; and

E–Cat_{st} = Ni concentration on equilibrium catalyst measured during source test, ppmw.

(iv) If you elect Option 4 in paragraph (a)(1)(iv) of this section, the Ni lbs/1,000 lbs of coke burn-off emission limit, compute your Ni emission rate using Equations 1 and 8 of this section and your site-specific Ni operating limit (if you use a continuous opacity monitoring system) using Equations 9 and 10 of this section as follows:

$$E_{Ni_2} = \frac{C_{Ni} \times Q_{sd}}{R_c} \qquad \text{(Eq. 8)}$$

Where:

E_{Ni2} = Normalized mass emission rate of Ni, mg/kg coke (lb/1,000 lbs coke).

$$\text{Opacity}_2 = \frac{1.0 \text{ mg/kg coke}}{\text{NiEmR2}_{st}} \times \text{Opacity}_{st} \qquad \text{(Eq. 9)}$$

Where:

Opacity_2 = Opacity value for use in Equation 10 of this section, percent, or 10 percent, whichever is greater; and

NiEmR2_{st} = Average Ni emission rate calculated as the arithmetic average Ni emission rate using Equation 8 of this section for each of the performance test runs, mg/kg coke.

$$\text{Ni Operating Limit}_2 = \text{Opacity}_2 \times \text{E-Cat}_{st} \times \frac{Q_{mon,st}}{R_{c,st}} \qquad \text{(Eq. 10)}$$

Where:

Ni operating limit_2 = Maximum permissible hourly average Ni operating limit, percent-ppmw-acfm-hr/kg coke, i.e., your site-specific Ni operating limit; and

$R_{c,st}$ = Coke burn rate from Equation 1 of this section, as measured during the initial performance test, kg coke/hr.

(5) Demonstrate initial compliance with each emission limitation that applies to you according to Table 5 of this subpart.

(6) Demonstrate initial compliance with the work practice standard in paragraph (a)(3) of this section by submitting your operation, maintenance, and monitoring plan to your permitting authority as part of your Notification of Compliance Status.

(7) Submit the Notification of Compliance Status containing the results of the initial compliance demonstration according to the requirements in §63.1574.

(c) *How do I demonstrate continuous compliance with the emission limitations and work practice standards?* You must:

(1) Demonstrate continuous compliance with each emission limitation in Tables 1 and 2 of this subpart that applies to you according to the methods specified in Tables 6 and 7 of this subpart.

(2) Demonstrate continuous compliance with the work practice standard in paragraph (a)(3) of this section by maintaining records to document conformance with the procedures in your operation, maintenance, and monitoring plan.

(3) If you use a continuous opacity monitoring system and elect to comply with Option 3 in paragraph (a)(1)(iii) of this section, determine continuous compliance with your site-specific Ni operating limit by using Equation 11 of this section as follows:

$$\text{Ni Operating Value}_1 = \text{Opacity} \times Q_{mon} \times \text{E-Cat} \qquad \text{(Eq. 11)}$$

Where:

Ni operating value_1 = Maximum permissible hourly average Ni standard operating value, %-acfm-ppmw;

Opacity = Hourly average opacity, percent;

Q_{mon} = Hourly average actual gas flow rate as measured by continuous parameter monitoring system or calculated by alternative procedure in § 63.1573, acfm; and

E-Cat = Ni concentration on equilibrium catalyst from weekly or more recent measurement, ppmw.

(4) If you use a continuous opacity monitoring system and elect to comply with Option 4 in paragraph (a)(1)(iv) of this section, determine continuous compliance with your site-specific Ni operating limit by using Equation 12 of this section as follows:

$$\text{Ni Operating Value}_2 = \frac{\text{Opacity} \times \text{E-Cat} \times Q_{mon}}{R_c} \qquad \text{(Eq. 12)}$$

Where:

Ni operating value$_2$ = Maximum permissible hourly average Ni standard operating value, percent-acfm-ppmw-hr/kg coke.

§ 63.1565 What are my requirements for organic HAP emissions from catalytic cracking units?

(a) *What emission limitations and work practice standards must I meet?* You must:

(1) Meet each emission limitation in Table 8 of this subpart that applies to you. If your catalytic cracking unit is subject to the NSPS for carbon monoxide (CO) in § 60.103 of this chapter, you must meet the emission limitations for NSPS units. If your catalytic cracking unit isn't subject to the NSPS for CO, you can choose from the two options in paragraphs (a)(1)(i) through (ii) of this section:

(i) You can elect to comply with the NSPS requirements (Option 1); or

(ii) You can elect to comply with the CO emission limit (Option 2).

(2) Comply with each site-specific operating limit in Table 9 of this subpart that applies to you.

(3) Prepare an operation, maintenance, and monitoring plan according to the requirements in § 63.1574(f) and operate at all times according to the procedures in the plan.

(4) The emission limitations and operating limits for organic HAP emissions from catalytic cracking units required in paragraphs (a)(1) and (2) of this section do not apply during periods of planned maintenance preapproved by the applicable permitting authority according to the requirements in § 63.1575(j).

(b) *How do I demonstrate initial compliance with the emission limitations and work practice standards?* You must:

(1) Install, operate, and maintain a continuous monitoring system according to the requirements in § 63.1572 and Table 10 of this subpart. Except:

(i) Whether or not your catalytic cracking unit is subject to the NSPS for CO in § 60.103 of this chapter, you don't have to install and operate a continuous emission monitoring system if you show that CO emissions from your vent average less than 50 parts per million (ppm), dry basis. You must get an exemption from your permitting authority, based on your written request. To show that the emissions average is less than 50 ppm (dry basis), you must continuously monitor CO emissions for 30 days using a CO continuous emission monitoring system that meets the requirements in § 63.1572.

(ii) If your catalytic cracking unit isn't subject to the NSPS for CO, you don't have to install and operate a continuous emission monitoring system or a continuous parameter monitoring system if you vent emissions to a boiler (including a ''CO boiler'') or process heater that has a design heat input capacity of at least 44 megawatts (MW).

(iii) If your catalytic cracking unit isn't subject to the NSPS for CO, you don't have to install and operate a continuous emission monitoring system or a continuous parameter monitoring system if you vent emissions to a boiler or process heater in which all vent

streams are introduced into the flame zone.

(2) Conduct each performance test for a catalytic cracking unit not subject to the NSPS for CO according to the requirements in §63.1571 and under the conditions specified in Table 11 of this subpart.

(3) Establish each site-specific operating limit in Table 9 of this subpart that applies to you according to the procedures in Table 11 of this subpart.

(4) Demonstrate initial compliance with each emission limitation that applies to you according to Table 12 of this subpart.

(5) Demonstrate initial compliance with the work practice standard in paragraph (a)(3) of this section by submitting the operation, maintenance, and monitoring plan to your permitting authority as part of your Notification of Compliance Status according to §63.1574.

(6) Submit the Notification of Compliance Status containing the results of the initial compliance demonstration according to the requirements in §63.1574.

(c) *How do I demonstrate continuous compliance with the emission limitations and work practice standards?* You must:

(1) Demonstrate continuous compliance with each emission limitation in Tables 8 and 9 of this subpart that applies to you according to the methods specified in Tables 13 and 14 of this subpart.

(2) Demonstrate continuous compliance with the work practice standard in paragraph (a)(3) of this section by complying with the procedures in your operation, maintenance, and monitoring plan.

§63.1566 What are my requirements for organic HAP emissions from catalytic reforming units?

(a) *What emission limitations and work practice standards must I meet?* You must:

(1) Meet each emission limitation in Table 15 of this subpart that applies to you. You can choose from the two options in paragraphs (a)(1)(i) through (ii) of this section:

(i) You can elect to vent emissions of total organic compounds (TOC) to a flare that meets the control device requirements in §63.11(b) (Option 1); or

(ii) You can elect to use a control device to meet a TOC percent reduction standard or concentration limit, whichever is less stringent (Option 2).

(2) Comply with each site-specific operating limit in Table 16 of this subpart that applies to you.

(3) The emission limitations in Tables 15 and 16 of this subpart apply to emissions from catalytic reforming unit process vents that occur during depressuring and purging operations. These process vents include those used during unit depressurization, purging, coke burn, catalyst rejuvenation, and reduction or activation purge.

(4) The emission limitations in Tables 15 and 16 of this subpart do not apply to emissions from process vents during depressuring and purging operations when the reactor vent pressure is 5 pounds per square inch gauge (psig) or less.

(5) Prepare an operation, maintenance, and monitoring plan according to the requirements in §63.1574(f) and operate at all times according to the procedures in the plan.

(b) *How do I demonstrate initial compliance with the emission limitations and work practice standard?* You must:

(1) Install, operate, and maintain a continuous monitoring system(s) according to the requirements in §63.1572 and Table 17 of this subpart.

(2) Conduct each performance test for a catalytic reforming unit according to the requirements in §63.1571 and under the conditions specified in Table 18 of this subpart.

(3) Establish each site-specific operating limit in Table 16 of this subpart that applies to you according to the procedures in Table 18 of this subpart.

(4) Use the procedures in paragraph (b)(4)(i) or (ii) of this section to determine initial compliance with the emission limitations.

(i) If you elect the percent reduction standard under Option 2, calculate the emission rate of TOC using Equation 1 of this section (if you use Method 25) or Equation 2 of this section (if you use Method 25A); then calculate the mass emission reduction using Equation 3 of this section as follows:

$$E = K_4 M_c Q_s \qquad \text{(Eq. 1)}$$

Where:

E = Emission rate of TOC in the vent stream, kilograms-C per hour;

K_4 = Constant, 6.0×10^{-5} (kilograms per milligram)(minutes per hour);

M_c = Mass concentration of total gaseous nonmethane organic as measured and calculated using Method 25 in appendix A to part 60 of this chapter, mg/dscm; and

Q_s = Vent stream flow rate, dscm/min, at a temperature of 20 degrees Celsius (C).

$$E = K_5\, C_{TOC}\, Q_S \qquad \text{(Eq. 2)}$$

Where:

E = Emission rate of TOC in the vent stream, kilograms-C per hour;

K_5 = Constant, 9.0 x 10^{-5}(parts per million)$^{-1}$ (gram-mole per standard cubic meter) (gram-C per gram-mole-propane) (kilogram per gram) (minutes per hour), where the standard temperature (standard cubic meter) is at 20 degrees C (uses 36g–C/g.mole propane);

C_{TOC} = Concentration of TOC on a dry basis in ppmv as propane as measured by Method 25A in appendix A to part 60 of this chapter; and

Q_s = Vent stream flow rate, dry standard cubic meters per minute, at a temperature of 20 degrees C.

$$\%\ \text{reduction} = \frac{E_i - E_o}{E_i} \times 100\% \qquad \text{(Eq. 3)}$$

Where:

E_i = Mass emission rate of TOC at control device inlet, kg/hr; and

E_o = Mass emission rate of TOC at control device outlet, kg/hr.

(5) If you elect the 20 parts per million by volume (ppmv) concentration limit, correct the measured TOC concentration for oxygen (O_2) content in the gas stream using Equation 4 of this section as follows:

$$C_{TOC,\,3\%O_2} = C_{TOC}\left(\frac{17.9\%}{20.9\% - \%O_2}\right) \qquad \text{(Eq. 4)}$$

(6) You are not required to do a TOC performance test if:

(i) You elect to vent emissions to a flare as provided in paragraph (a)(1)(i) of this section (Option 1); or

(ii) You elect the TOC percent reduction or concentration limit in paragraph (a)(1)(ii) of this section (Option 2), and you use a boiler or process heater with a design heat input capacity of 44 MW or greater or a boiler or process heater in which all vent streams are introduced into the flame zone.

(7) Demonstrate initial compliance with each emission limitation that applies to you according to Table 19 of this subpart.

(8) Demonstrate initial compliance with the work practice standard in paragraph (a)(5) of this section by submitting the operation, maintenance, and monitoring plan to your permitting authority as part of your Notification of Compliance Status.

(9) Submit the Notification of Compliance Status containing the results of the initial compliance demonstration according to the requirements in § 63.1574.

(c) *How do I demonstrate continuous compliance with the emission limitations and work practice standards?* You must:

(1) Demonstrate continuous compliance with each emission limitation in Tables 15 and 16 of this subpart that applies to you according to the methods specified in Tables 20 and 21 of this subpart.

(2) Demonstrate continuous compliance with the work practice standards in paragraph (a)(3) of this section by complying with the procedures in your operation, maintenance, and monitoring plan.

§63.1567 What are my requirements for inorganic HAP emissions from catalytic reforming units?

(a) *What emission limitations and work practice standards must I meet?* You must:

(1) Meet each emission limitation in Table 22 of this subpart that applies to you. These emission limitations apply during coke burn-off and catalyst rejuvenation. You can choose from the two options in paragraphs (a)(1)(i) through (ii) of this section:

(i) You can elect to use a control device to meet either a percent reduction standard for hydrogen chloride (HCl) emissions (Option 1); or

(ii) You can elect to meet an HCl concentration limit (Option 2).

(2) Meet each site-specific operating limit in Table 23 of this subpart that applies to you. These operating limits apply during coke burn-off and catalyst rejuvenation.

(3) Prepare an operation, maintenance, and monitoring plan according to the requirements in §63.1574(f) and operate at all times according to the procedures in the plan.

(b) *How do I demonstrate initial compliance with the emission limitations and work practice standard?* You must:

(1) Install, operate, and maintain a continuous monitoring system(s) according to the requirements in §63.1572 and Table 24 of this subpart.

(2) Conduct each performance test for a catalytic reforming unit according to the requirements in §63.1571 and the conditions specified in Table 25 of this subpart.

(3) Establish each site-specific operating limit in Table 23 of this subpart that applies to you according to the procedures in Table 25 of this subpart.

(4) Demonstrate initial compliance with each emission limitation that applies to you according to Table 26 of this subpart.

(5) Demonstrate initial compliance with the work practice standard in paragraph (a)(3) of this section by submitting the operation, maintenance, and monitoring plan to your permitting authority as part of your Notification of Compliance Status.

(6) Submit the Notification of Compliance Status containing the results of the initial compliance demonstration according to the requirements in §63.1574.

(c) *How do I demonstrate continuous compliance with the emission limitations and work practice standard?* You must:

(1) Demonstrate continuous compliance with each emission limitation in Tables 22 and 23 of this subpart that applies to you according to the methods specified in Tables 27 and 28 of this subpart.

(2) Demonstrate continuous compliance with the work practice standard in paragraph (a)(3) of this section by maintaining records to document conformance with the procedures in your operation, maintenance and monitoring plan.

§63.1568 What are my requirements for HAP emissions from sulfur recovery units?

(a) *What emission limitations and work practice standard must I meet?* You must:

(1) Meet each emission limitation in Table 29 of this subpart that applies to you. If your sulfur recovery unit is subject to the NSPS for sulfur oxides in §60.104 of this chapter, you must meet the emission limitations for NSPS units. If your sulfur recovery unit isn't subject to the NSPS for sulfur oxides, you can choose from the options in paragraphs (a)(1)(i) through (ii) of this section:

(i) You can elect to meet the NSPS requirements (Option 1); or

(ii) You can elect to meet the total reduced sulfur (TRS) emission limitation (Option 2).

(2) Meet each operating limit in Table 30 of this subpart that applies to you.

(3) Prepare an operation, maintenance, and monitoring plan according to the requirements in §63.1574(f) and operate at all times according to the procedures in the plan.

(b) *How do I demonstrate initial compliance with the emission limitations and work practice standards?* You must:

(1) Install, operate, and maintain a continuous monitoring system according to the requirements in § 63.1572 and Table 31 of this subpart.

(2) Conduct each performance test for a sulfur recovery unit not subject to the NSPS for sulfur oxides according to the requirements in § 63.1571 and under the conditions specified in Table 32 of this subpart.

(3) Establish each site-specific operating limit in Table 30 of this subpart that applies to you according to the procedures in Table 32 of this subpart.

(4) Correct the reduced sulfur samples to zero percent excess air using Equation 1 of this section as follows:

$$C_{adj} = C_{meas}\left[20.9_c/\left(20.9 - \%O_2\right)\right] \qquad \text{(Eq. 1)}$$

Where:

C_{adj} = pollutant concentration adjusted to zero percent oxygen, ppm or g/dscm;

C_{meas} = pollutant concentration measured on a dry basis, ppm or g/dscm;

20.9_c = 20.9 percent oxygen—0.0 percent oxygen (defined oxygen correction basis), percent;

20.9 = oxygen concentration in air, percent;

$\%O_2$ = oxygen concentration measured on a dry basis, percent.

(5) Demonstrate initial compliance with each emission limitation that applies to you according to Table 33 of this subpart.

(6) Demonstrate initial compliance with the work practice standard in paragraph (a)(3) of this section by submitting the operation, maintenance, and monitoring plan to your permitting authority as part of your notification of compliance status.

(7) Submit the notification of compliance status containing the results of the initial compliance demonstration according to the requirements in § 63.1574.

(c) *How do I demonstrate continuous compliance with the emission limitations and work practice standards?* You must:

(1) Demonstrate continuous compliance with each emission limitation in Tables 29 and 30 of this subpart that applies to you according to the methods specified in Tables 34 and 35 of this subpart.

(2) Demonstrate continuous compliance with the work practice standard in paragraph (a)(3) of this section by complying with the procedures in your operation, maintenance, and monitoring plan.

§ 63.1569 What are my requirements for HAP emissions from bypass lines?

(a) *What work practice standards must I meet?* (1) You must meet each work practice standard in Table 36 of this subpart that applies to you. You can choose from the four options in paragraphs (a)(1)(i) through (iv) of this section:

(i) You can elect to install an automated system (Option 1);

(ii) You can elect to use a manual lock system (Option 2);

(iii) You can elect to seal the line (Option 3); or

(iv) You can elect to vent to a control device (Option 4).

(2) As provided in § 63.6(g), we, the EPA, may choose to grant you permission to use an alternative to the work practice standard in paragraph (a)(1) of this section.

(3) You must prepare an operation, maintenance, and monitoring plan according to the requirements in § 63.1574(f) and operate at all times according to the procedures in the plan.

(b) *How do I demonstrate initial compliance with the work practice standards?* You must:

(1) If you elect the option in paragraph (a)(1)(i) of this section, conduct each performance test for a bypass line according to the requirements in § 63.1571 and under the conditions specified in Table 37 of this subpart.

(2) Demonstrate initial compliance with each work practice standard in Table 36 of this subpart that applies to

you according to Table 38 of this subpart.

(3) Demonstrate initial compliance with the work practice standard in paragraph (a)(3) of this section by submitting the operation, maintenance, and monitoring plan to your permitting authority as part of your notification of compliance status.

(4) Submit the notification of compliance status containing the results of the initial compliance demonstration according to the requirements in §63.1574.

(c) *How do I demonstrate continuous compliance with the work practice standards?* You must:

(1) Demonstrate continuous compliance with each work practice standard in Table 36 of this subpart that applies to you according to the requirements in Table 39 of this subpart.

(2) Demonstrate continuous compliance with the work practice standard in paragraph (a)(2) of this section by complying with the procedures in your operation, maintenance, and monitoring plan.

GENERAL COMPLIANCE REQUIREMENTS

§63.1570 What are my general requirements for complying with this subpart?

(a) You must be in compliance with all of the non-opacity standards in this subpart during the times specified in §63.6(f)(1).

(b) You must be in compliance with the opacity and visible emission limits in this subpart during the times specified in §63.6(h)(1).

(c) You must always operate and maintain your affected source, including air pollution control and monitoring equipment, according to the provisions in §63.6(e)(1)(i). During the period between the compliance date specified for your affected source and the date upon which continuous monitoring systems have been installed and validated and any applicable operating limits have been set, you must maintain a log detailing the operation and maintenance of the process and emissions control equipment.

(d) You must develop and implement a written startup, shutdown, and malfunction plan (SSMP) according to the provisions in §63.6(e)(3).

(e) During periods of startup, shutdown, and malfunction, you must operate in accordance with your SSMP.

(f) You must report each instance in which you did not meet each emission limitation and each operating limit in this subpart that applies to you. This includes periods of startup, shutdown, and malfunction. You also must report each instance in which you did not meet the work practice standards in this subpart that apply to you. These instances are deviations from the emission limitations and work practice standards in this subpart. These deviations must be reported according to the requirements in §63.1575.

(g) Consistent with §§63.6(e) and 63.7(e)(1), deviations that occur during a period of startup, shutdown, or malfunction are not violations if you demonstrate to the Administrator's satisfaction that you were operating in accordance with the SSMP. The SSMP must require that good air pollution control practices are used during those periods. The plan must also include elements designed to minimize the frequency of such periods (i.e., root cause analysis). The Administrator will determine whether deviations that occur during a period of startup, shutdown, or malfunction are violations, according to the provisions in §63.6(e) and the contents of the SSMP.

§63.1571 How and when do I conduct a performance test or other initial compliance demonstration?

(a) *When must I conduct a performance test?* You must conduct performance tests and report the results by no later than 150 days after the compliance date specified for your source in §63.1563 and according to the provisions in §63.7(a)(2). If you are required to do a performance evaluation or test for a semi-regenerative catalytic reforming unit catalyst regenerator vent, you may do them at the first regeneration cycle after your compliance date and report the results in a followup Notification of Compliance Status report due no later than 150 days after the test.

(1) For each emission limitation or work practice standard where initial compliance is not demonstrated using a performance test, opacity observation, or visible emission observation,

you must conduct the initial compliance demonstration within 30 calendar days after the compliance date that is specified for your source in § 63.1563.

(2) For each emission limitation where the averaging period is 30 days, the 30-day period for demonstrating initial compliance begins at 12:00 a.m. on the compliance date that is specified for your source in § 63.1563 and ends at 11:59 p.m., 30 calendar days after the compliance date that is specified for your source in § 63.1563.

(3) If you commenced construction or reconstruction between September 11, 1998 and April 11, 2002, you must demonstrate initial compliance with either the proposed emission limitation or the promulgated emission limitation no later than October 8, 2002 or within 180 calendar days after startup of the source, whichever is later, according to § 63.7(a)(2)(ix).

(4) If you commenced construction or reconstruction between September 11, 1998 and April 11, 2002, and you chose to comply with the proposed emission limitation when demonstrating initial compliance, you must conduct a second compliance demonstration for the promulgated emission limitation by October 10, 2005, or after startup of the source, whichever is later, according to § 63.7(a)(2)(ix).

(b) *What are the general requirements for performance test and performance evaluations?* You must:

(1) Conduct each performance test according to the requirements in § 63.7(e)(1).

(2) Except for opacity and visible emission observations, conduct three separate test runs for each performance test as specified in § 63.7(e)(3). Each test run must last at least 1 hour.

(3) Conduct each performance evaluation according to the requirements in § 63.8(e).

(4) Not conduct performance tests during periods of startup, shutdown, or malfunction, as specified in § 63.7(e)(1).

(5) Calculate the average emission rate for the performance test by calculating the emission rate for each individual test run in the units of the applicable emission limitation using Equation 2, 5, or 8 of § 63.1564, and determining the arithmetic average of the calculated emission rates.

(c) *What procedures must I use for an engineering assessment?* You may choose to use an engineering assessment to calculate the process vent flow rate, net heating value, TOC emission rate, and total organic HAP emission rate expected to yield the highest daily emission rate when determining the emission reduction or outlet concentration for the organic HAP standard for catalytic reforming units. If you use an engineering assessment, you must document all data, assumptions, and procedures to the satisfaction of the applicable permitting authority. An engineering assessment may include the approaches listed in paragraphs (c)(1) through (c)(4) of this section. Other engineering assessments may be used but are subject to review and approval by the applicable permitting authority.

(1) You may use previous test results provided the tests are representative of current operating practices at the process unit, and provided EPA methods or approved alternatives were used;

(2) You may use bench-scale or pilot-scale test data representative of the process under representative operating conditions;

(3) You may use maximum flow rate, TOC emission rate, organic HAP emission rate, or organic HAP or TOC concentration specified or implied within a permit limit applicable to the process vent; or

(4) You may use design analysis based on engineering principles, measurable process parameters, or physical or chemical laws or properties. Examples of analytical methods include, but are not limited to:

(i) Use of material balances based on process stoichiometry to estimate maximum TOC concentrations;

(ii) Calculation of hourly average maximum flow rate based on physical equipment design such as pump or blower capacities; and

(iii) Calculation of TOC concentrations based on saturation conditions.

(d) *Can I adjust the process or control device measured values when establishing an operating limit?* If you do a performance test to demonstrate compliance, you must base the process or control device operating limits for continuous parameter monitoring systems on the

results measured during the performance test. You may adjust the values measured during the performance test according to the criteria in paragraphs (d)(1) through (3) of this section.

(1) If you must meet the HAP metal emission limitations in § 63.1564, you elect the option in paragraph (a)(1)(iii) in § 63.1564 (Ni lb/hr), and you use continuous parameter monitoring systems, you must establish an operating limit for the equilibrium catalyst Ni concentration based on the laboratory analysis of the equilibrium catalyst Ni concentration from the initial performance test. Section 63.1564(b)(2) allows you to adjust the laboratory measurements of the equilibrium catalyst Ni concentration to the maximum level. You must make this adjustment using Equation 1 of this section as follows:

$$\text{Ecat-Limit} = \frac{13\ \text{g Ni/hr}}{\text{NiEmR1}_{st}} \times \text{Ecat}_{st} \qquad \text{(Eq. 1)}$$

Where:

Ecat-Limit = Operating limit for equilibrium catalyst Ni concentration, mg/kg;

NiEmR1_{st} = Average Ni emission rate calculated as the arithmetic average Ni emission rate using Equation 5 of this section for each performance test run, g Ni/hr; and

Ecat_{st} = Average equilibrium Ni concentration from laboratory test results, mg/kg.

(2) If you must meet the HAP metal emission limitations in § 63.1564, you elect the option in paragraph (a)(1)(iv) in § 63.1564 (Ni lb/1,000 lb of coke burn-off), and you use continuous parameter monitoring systems, you must establish an operating limit for the equilibrium catalyst Ni concentration based on the laboratory analysis of the equilibrium catalyst Ni concentration from the initial performance test. Section 63.1564(b)(2) allows you to adjust the laboratory measurements of the equilibrium catalyst Ni concentration to the maximum level. You must make this adjustment using Equation 2 of this section as follows:

$$\text{Ecat-Limit} = \frac{1.0\ \text{mg/kg coke burn-off}}{\text{NiEmR2}_{st}} \times \text{Ecat}_{st} \qquad \text{(Eq. 2)}$$

Where:

NiEmR2_{st} = Average Ni emission rate calculated as the arithmetic average Ni emission rate using Equation 8 of § 63.1564 for each performance test run, mg/kg coke burn-off.

(3) If you choose to adjust the equilibrium catalyst Ni concentration to the maximum level, you can't adjust any other monitored operating parameter (i.e., gas flow rate, voltage, pressure drop, liquid-to-gas ratio).

(4) Except as specified in paragraph (d)(3) of this section, if you use continuous parameter monitoring systems, you may adjust one of your monitored operating parameters (flow rate, voltage and secondary current, pressure drop, liquid-to-gas ratio) from the average of measured values during the performance test to the maximum value (or minimum value, if applicable) representative of worst-case operating conditions, if necessary. This adjustment of measured values may be done using control device design specifications, manufacturer recommendations, or other applicable information. You must provide supporting documentation and rationale in your Notification of Compliance Status, demonstrating to the satisfaction of your permitting authority, that your affected source complies with the applicable emission

limit at the operating limit based on adjusted values.

(e) *Can I change my operating limit?* You may change the established operating limit by meeting the requirements in paragraphs (e)(1) through (3) of this section.

(1) You may change your established operating limit for a continuous parameter monitoring system by doing an additional performance test, a performance test in conjunction with an engineering assessment, or an engineering assessment to verify that, at the new operating limit, you are in compliance with the applicable emission limitation.

(2) You must establish a revised operating limit for your continuous parameter monitoring system if you make any change in process or operating conditions that could affect control system performance or you change designated conditions after the last performance or compliance tests were done. You can establish the revised operating limit as described in paragraph (e)(1) of this section.

(3) You may change your site-specific opacity operating limit or Ni operating limit only by doing a new performance test.

§ 63.1572 What are my monitoring installation, operation, and maintenance requirements?

(a) You must install, operate, and maintain each continuous emission monitoring system according to the requirements in paragraphs (a)(1) through (4) of this section.

(1) You must install, operate, and maintain each continuous emission monitoring system according to the requirements in Table 40 of this subpart.

(2) If you use a continuous emission monitoring system to meet the NSPS CO or SO_2 limit, you must conduct a performance evaluation of each continuous emission monitoring system according to the requirements in § 63.8 and Table 40 of this subpart. This requirement does not apply to an affected source subject to the NSPS that has already demonstrated initial compliance with the applicable performance specification.

(3) As specified in § 63.8(c)(4)(ii), each continuous emission monitoring system must complete a minimum of one cycle of operation (sampling, analyzing, and data recording) for each successive 15-minute period.

(4) Data must be reduced as specified in § 63.8(g)(2).

(b) You must install, operate, and maintain each continuous opacity monitoring system according to the requirements in paragraphs (b)(1) through (3) of this section.

(1) Each continuous opacity monitoring system must be installed, operated, and maintained according to the requirements in Table 40 of this subpart.

(2) If you use a continuous opacity monitoring system to meet the NSPS opacity limit, you must conduct a performance evaluation of each continuous opacity monitoring system according to the requirements in § 63.8 and Table 40 of this subpart. This requirement does not apply to an affected source subject to the NSPS that has already demonstrated initial compliance with the applicable performance specification.

(3) As specified in § 63.8(c)(4)(i), each continuous opacity monitoring system must complete a minimum of one cycle of sampling and analyzing for each successive 10-second period and one cycle of data recording for each successive 6-minute period.

(c) You must install, operate, and maintain each continuous parameter monitoring system according to the requirements in paragraphs (c)(1) through (7) of this section.

(1) Each continuous parameter monitoring system must be installed, operated, and maintained according to the requirements in Table 41 of this subpart and in a manner consistent with the manufacturer's specifications or other written procedures that provide adequate assurance that the equipment will monitor accurately.

(2) The continuous parameter monitoring system must complete a minimum of one cycle of operation for each successive 15-minute period. You must have a minimum of four successive cycles of operation to have a valid hour of data (or at least two if a calibration check is performed during that hour or if the continuous parameter monitoring system is out-of-control).

(3) Each continuous parameter monitoring system must have valid hourly average data from at least 75 percent of the hours during which the process operated.

(4) Each continuous parameter monitoring system must determine and record the hourly average of all recorded readings and if applicable, the daily average of all recorded readings for each operating day. The daily average must cover a 24-hour period if operation is continuous or the number of hours of operation per day if operation is not continuous.

(5) Each continuous parameter monitoring system must record the results of each inspection, calibration, and validation check.

(d) You must monitor and collect data according to the requirements in paragraphs (d)(1) and (2) of this section.

(1) Except for monitoring malfunctions, associated repairs, and required quality assurance or control activities (including as applicable, calibration checks and required zero and span adjustments), you must conduct all monitoring in continuous operation (or collect data at all required intervals) at all times the affected source is operating.

(2) You may not use data recorded during monitoring malfunctions, associated repairs, and required quality assurance or control activities for purposes of this regulation, including data averages and calculations, for fulfilling a minimum data availability requirement, if applicable. You must use all the data collected during all other periods in assessing the operation of the control device and associated control system.

§ 63.1573 What are my monitoring alternatives?

(a) *What is the approved alternative for monitoring gas flow rate?* You can elect to use this alternative to a continuous parameter monitoring system for the catalytic regenerator exhaust gas flow rate for your catalytic cracking unit if the unit does not introduce any other gas streams into the catalyst regeneration vent (i.e., complete combustion units with no additional combustion devices). If you select this alternative, you must use the same procedure for the performance test and for monitoring after the performance test.

(1) Install and operate a continuous parameter monitoring system to measure and record the hourly average volumetric air flow rate to the catalytic cracking unit regenerator. Or, you can determine and record the hourly average volumetric air flow rate to the catalytic cracking unit regenerator using the catalytic cracking unit control room instrumentation.

(2) Install and operate a continuous parameter monitoring system to measure and record the temperature of the gases entering the control device (or exiting the catalyst regenerator if you do not use an add-on control device).

(3) Calculate and record the hourly average actual exhaust gas flow rate using Equation 1 of this section as follows:

$$Q_{gas} = (1.12\ \text{scfm/dscfm}) \times (Q_{air} + Q_{oxy}) \times \left(\frac{Temp_{gas}}{273^{\circ}\text{K}}\right) \times \left(\frac{P_{vent}}{1\ \text{atm.}}\right) \qquad \text{(Eq. 1)}$$

Where:

Q_{gas} = Hourly average actual gas flow rate, acfm;

1.12 = Default correction factor to convert gas flow from dry standard cubic feet per minute (dscfm) to standard cubic feet per minute (scfm);

Q_{air} = Volumetric flow rate of air to regenerator, as determined from the catalytic cracking unit control room instrumentations, dscfm;

Q_{oxy} = Volumetric flow rate of oxygen-enriched air stream to regenerator, as determined from the catalytic cracking unit control room instrumentations, dscfm;

$Temp_{gas}$ = Temperature of gas stream in vent measured as near as practical to the control device or opacity monitor, °K. For wet scrubbers, temperature of gas prior to the wet scrubber; and

P_{vent} = Absolute pressure in the vent measured as near as practical to the control device or opacity monitor, atm. When used in conjunction with opacity in the final vent stack, you can assume P_{vent} = 1 atm.

(b) *What is the approved alternative for monitoring pH levels?* If you use a wet scrubber to control inorganic HAP emissions from your vent on a catalytic reforming unit, you can measure and record the pH of the water (or scrubbing liquid) exiting the scrubber at least once an hour during coke burn-off and catalyst rejuvenation using pH strips as an alternative to a continuous parameter monitoring system. The pH strips must meet the requirements in Table 41 of this subpart.

(c) *Can I use another type of monitoring system?* You may request approval from your permitting authority to use an automated data compression system. An automated data compression system does not record monitored operating parameter values at a set frequency (e.g., once every hour) but records all values that meet set criteria for variation from previously recorded values. Your request must contain a description of the monitoring system and data recording system, including the criteria used to determine which monitored values are recorded and retained, the method for calculating daily averages, and a demonstration that the system meets all of the criteria in paragraphs (c)(1) through (5) of this section:

(1) The system measures the operating parameter value at least once every hour;

(2) The system records at least 24 values each day during periods of operation;

(3) The system records the date and time when monitors are turned off or on;

(4) The system recognizes unchanging data that may indicate the monitor is not functioning properly, alerts the operator, and records the incident; and

(5) The system computes daily average values of the monitored operating parameter based on recorded data.

(d) *Can I monitor other process or control device operating parameters?* You may request approval to monitor parameters other than those required in this subpart. You must request approval if:

(1) You use a control device other than a thermal incinerator, boiler, process heater, flare, electrostatic precipitator, or wet scrubber;

(2) You use a combustion control device (e.g., incinerator, flare, boiler or process heater with a design heat capacity of at least 44 MW, boiler or process heater where the vent stream is introduced into the flame zone), electrostatic precipitator, or scrubber but want to monitor a parameter other than those specified; or

(3) You wish to use another type of continuous emission monitoring system that provides direct measurement of a pollutant (i.e., a PM or multi-metals HAP continuous emission monitoring system, a carbonyl sulfide/carbon disulfide continuous emission monitoring system, a TOC continuous emission monitoring system, or HCl continuous emission monitoring system).

(e) *How do I request to monitor alternative parameters?* You must submit a request for review and approval or disapproval to the Administrator. The request must include the information in paragraphs (e)(1) through (5) of this section.

(1) A description of each affected source and the parameter(s) to be monitored to determine whether the affected source will continuously comply with the emission limitations and an explanation of the criteria used to select the parameter(s).

(2) A description of the methods and procedures that will be used to demonstrate that the parameter can be used to determine whether the affected source will continuously comply with the emission limitations and the schedule for this demonstration. You must certify that you will establish an operating limit for the monitored parameter(s) that represents the conditions in existence when the control device is

being properly operated and maintained to meet the emission limitation.

(3) The frequency and content of monitoring, recording, and reporting, if monitoring and recording are not continuous. You also must include the rationale for the proposed monitoring, recording, and reporting requirements.

(4) Supporting calculations.

(5) Averaging time for the alternative operating parameter.

NOTIFICATIONS, REPORTS, AND RECORDS

§63.1574 What notifications must I submit and when?

(a) Except as allowed in paragraphs (a)(1) through (3) of this section, you must submit all of the notifications in §§63.6(h), 63.7(b) and (c), 63.8(e), 63.8(f)(4), 63.8(f)(6), and 63.9(b) through (h) that apply to you by the dates specified.

(1) You must submit the notification of your intention to construct or reconstruct according to §63.9(b)(5) unless construction or reconstruction had commenced and initial startup had not occurred before April 11, 2002. In this case, you must submit the notification as soon as practicable before startup but no later than July 10, 2002. This deadline also applies to the application for approval of construction or reconstruction and approval of construction or reconstruction based on State preconstruction review required in §§63.5(d)(1)(i) and 63.5(f)(2).

(2) You must submit the notification of intent to conduct a performance test required in §63.7(b) at least 30 calendar days before the performance test is scheduled to begin (instead of 60 days).

(3) If you are required to conduct a performance test, performance evaluation, design evaluation, opacity observation, visible emission observation, or other initial compliance demonstration, you must submit a notification of compliance status according to §63.9(h)(2)(ii). You can submit this information in an operating permit application, in an amendment to an operating permit application, in a separate submission, or in any combination. In a State with an approved operating permit program where delegation of authority under section 112(l) of the CAA has not been requested or approved, you must provide a duplicate notification to the applicable Regional Administrator. If the required information has been submitted previously, you do not have to provide a separate notification of compliance status. Just refer to the earlier submissions instead of duplicating and resubmitting the previously submitted information.

(i) For each initial compliance demonstration that does not include a performance test, you must submit the Notification of Compliance Status no later than 30 calendar days following completion of the initial compliance demonstration.

(ii) For each initial compliance demonstration that includes a performance test, you must submit the notification of compliance status, including the performance test results, no later than 150 calendar days after the compliance date specified for your affected source in §63.1573.

(b) As specified in §63.9(b)(2), if you startup your new affected source before April 11, 2002, you must submit the initial notification no later than August 9, 2002.

(c) As specified in §63.9(b)(3), if you start your new or reconstructed affected source on or after April 11, 2002, you must submit the initial notification no later than 120 days after you become subject to this subpart.

(d) You also must include the information in Table 42 of this subpart in your notification of compliance status.

(e) If you request an extension of compliance for an existing catalytic cracking unit as allowed in §63.1563(c), you must submit a notification to your permitting authority containing the required information by October 13, 2003.

(f) As required by this subpart, you must prepare and implement an operation, maintenance, and monitoring plan for each affected source, control system, and continuous monitoring system. The purpose of this plan is to detail the operation, maintenance, and monitoring procedures you will follow.

(1) You must submit the plan to your permitting authority for review and approval along with your notification of compliance status. While you do not have to include the entire plan in your part 70 or 71 permit, you must include

the duty to prepare and implement the plan as an applicable requirement in your part 70 or 71 operating permit. You must submit any changes to your permitting authority for review and approval and comply with the plan until the change is approved.

(2) Each plan must include, at a minimum, the information specified in paragraphs (f)(2)(i) through (x) of this section.

(i) Process and control device parameters to be monitored for each affected source, along with established operating limits.

(ii) Procedures for monitoring emissions and process and control device operating parameters for each affected source.

(iii) Procedures that you will use to determine the coke burn-rate, the volumetric flow rate (if you use process data rather than direct measurement), and the rate of combustion of liquid or solid fossil fuels if you use an incinerator-waste heat boiler to burn the exhaust gases from a catalyst regenerator.

(iv) Procedures and analytical methods you will use to determine the equilibrium catalyst Ni concentration, the equilibrium catalyst Ni concentration monthly rolling average, and the hourly or hourly average Ni operating value.

(v) Procedures you will use to determine the pH of the water (or scrubbing liquid) exiting a wet scrubber if you use pH strips.

(vi) Procedures you will use to determine the HCl concentration of gases from a semi-regenerative catalytic reforming unit with an internal scrubbing system (i.e., no add-on control device) when you use a colormetric tube sampling system, including procedures for correcting for pressure (if applicable to the sampling equipment).

(vii) Procedures you will use to determine the gas flow rate for a catalytic cracking unit if you use the alternative procedure based on air flow rate and temperature.

(viii) Monitoring schedule, including when you will monitor and when you will not monitor an affected source (e.g., during the coke burn-off, regeneration process).

(ix) Quality control plan for each continuous opacity monitoring system and continuous emission monitoring system you use to meet an emission limit in this subpart. This plan must include procedures you will use for calibrations, accuracy audits, and adjustments to the system needed to meet applicable requirements for the system.

(x) Maintenance schedule for each affected source, monitoring system, and control device that is generally consistent with the manufacturer's instructions for routine and long-term maintenance.

§ 63.1575 What reports must I submit and when?

(a) You must submit each report in Table 43 of this subpart that applies to you.

(b) Unless the Administrator has approved a different schedule, you must submit each report by the date in Table 43 of this subpart and according to the requirements in paragraphs (b)(1) through (5) of this section.

(1) The first compliance report must cover the period beginning on the compliance date that is specified for your affected source in § 63.1563 and ending on June 30 or December 31, whichever date is the first date following the end of the first calendar half after the compliance date that is specified for your affected source in § 63.1563.

(2) The first compliance report must be postmarked or delivered no later than July 31 or January 31, whichever date follows the end of the first calendar half after the compliance date that is specified for your affected source in § 63.1563.

(3) Each subsequent compliance report must cover the semiannual reporting period from January 1 through June 30 or the semiannual reporting period from July 1 through December 31.

(4) Each subsequent compliance report must be postmarked or delivered no later than July 31 or January 31, whichever date is the first date following the end of the semiannual reporting period.

(5) For each affected source that is subject to permitting regulations pursuant to part 70 or 71 of this chapter,

and if the permitting authority has established dates for submitting semiannual reports pursuant to §70.6(a)(3)(iii)(A) or §71.6(a)(3)(iii)(A) of this chapter, you may submit the first and subsequent compliance reports according to the dates the permitting authority has established instead of according to the dates in paragraphs (b)(1) through (4) of this section.

(c) The compliance report must contain the information required in paragraphs (c)(1) through (4) of this section.

(1) Company name and address.

(2) Statement by a responsible official, with that official's name, title, and signature, certifying the accuracy of the content of the report.

(3) Date of report and beginning and ending dates of the reporting period.

(4) If there are no deviations from any emission limitation that applies to you and there are no deviations from the requirements for work practice standards, a statement that there were no deviations from the emission limitations or work practice standards during the reporting period and that no continuous emission monitoring system or continuous opacity monitoring system was inoperative, inactive, malfunctioning, out-of-control, repaired, or adjusted.

(d) For each deviation from an emission limitation and for each deviation from the requirements for work practice standards that occurs at an affected source where you are not using a continuous opacity monitoring system or a continuous emission monitoring system to comply with the emission limitation or work practice standard in this subpart, the compliance report must contain the information in paragraphs (c)(1) through (3) of this section and the information in paragraphs (d)(1) through (3) of this section.

(1) The total operating time of each affected source during the reporting period.

(2) Information on the number, duration, and cause of deviations (including unknown cause, if applicable), as applicable, and the corrective action taken.

(3) Information on the number, duration, and cause for monitor downtime incidents (including unknown cause, if applicable, other than downtime associated with zero and span and other daily calibration checks).

(e) For each deviation from an emission limitation occurring at an affected source where you are using a continuous opacity monitoring system or a continuous emission monitoring system to comply with the emission limitation, you must include the information in paragraphs (d)(1) through (3) of this section and the information in paragraphs (e)(1) through (13) of this section.

(1) The date and time that each malfunction started and stopped.

(2) The date and time that each continuous opacity monitoring system or continuous emission monitoring system was inoperative, except for zero (low-level) and high-level checks.

(3) The date and time that each continuous opacity monitoring system or continuous emission monitoring system was out-of-control, including the information in §63.8(c)(8).

(4) The date and time that each deviation started and stopped, and whether each deviation occurred during a period of startup, shutdown, or malfunction or during another period.

(5) A summary of the total duration of the deviation during the reporting period (recorded in minutes for opacity and hours for gases and in the averaging period specified in the regulation for other types of emission limitations), and the total duration as a percent of the total source operating time during that reporting period.

(6) A breakdown of the total duration of the deviations during the reporting period and into those that are due to startup, shutdown, control equipment problems, process problems, other known causes, and other unknown causes.

(7) A summary of the total duration of downtime for the continuous opacity monitoring system or continuous emission monitoring system during the reporting period (recorded in minutes for opacity and hours for gases and in the averaging time specified in the regulation for other types of standards), and the total duration of downtime for the continuous opacity monitoring system

or continuous emission monitoring system as a percent of the total source operating time during that reporting period.

(8) A breakdown of the total duration of downtime for the continuous opacity monitoring system or continuous emission monitoring system during the reporting period into periods that are due to monitoring equipment malfunctions, non-monitoring equipment malfunctions, quality assurance/quality control calibrations, other known causes, and other unknown causes.

(9) An identification of each HAP that was monitored at the affected source.

(10) A brief description of the process units.

(11) The monitoring equipment manufacturer(s) and model number(s).

(12) The date of the latest certification or audit for the continuous opacity monitoring system or continuous emission monitoring system.

(13) A description of any change in the continuous emission monitoring system or continuous opacity monitoring system, processes, or controls since the last reporting period.

(f) You also must include the information required in paragraphs (f)(1) through (2) of this section in each compliance report, if applicable.

(1) A copy of any performance test done during the reporting period on any affected unit. The report may be included in the next semiannual report. The copy must include a complete report for each test method used for a particular kind of emission point tested. For additional tests performed for a similar emission point using the same method, you must submit the results and any other information required, but a complete test report is not required. A complete test report contains a brief process description; a simplified flow diagram showing affected processes, control equipment, and sampling point locations; sampling site data; description of sampling and analysis procedures and any modifications to standard procedures; quality assurance procedures; record of operating conditions during the test; record of preparation of standards; record of calibrations; raw data sheets for field sampling; raw data sheets for field and laboratory analyses; documentation of calculations; and any other information required by the test method.

(2) Any requested change in the applicability of an emission standard (e.g., you want to change from the PM standard to the Ni standard for catalytic cracking units or from the HCl concentration standard to percent reduction for catalytic reforming units) in your periodic report. You must include all information and data necessary to demonstrate compliance with the new emission standard selected and any other associated requirements.

(g) You may submit reports required by other regulations in place of or as part of the compliance report if they contain the required information.

(h) The reporting requirements in paragraphs (h)(1) and (2) of this section apply to startups, shutdowns, and malfunctions:

(1) When actions taken to respond are consistent with the plan, you are not required to report these events in the semiannual compliance report and the reporting requirements in §§ 63.6(e)(3)(iii) and 63.10(d)(5) do not apply.

(2) When actions taken to respond are not consistent with the plan, you must report these events and the response taken in the semiannual compliance report. In this case, the reporting requirements in §§ 63.6(e)(3)(iv) and 63.10(d)(5) do not apply.

(i) If the applicable permitting authority has approved a period of planned maintenance for your catalytic cracking unit according to the requirements in paragraph (j) of this section, you must include the following information in your compliance report.

(1) In the compliance report due for the 6-month period before the routine planned maintenance is to begin, you must include a full copy of your written request to the applicable permitting authority and written approval received from the applicable permitting authority.

(2) In the compliance report due after the routine planned maintenance is complete, you must include a description of the planned routine maintenance that was performed for the control device during the previous 6-month period, and the total number of hours

during those 6 months that the control device did not meet the emission limitations and monitoring requirements as a result of the approved routine planned maintenance.

(j) If you own or operate multiple catalytic cracking units that are served by a single wet scrubber emission control device (e.g., a Venturi scrubber), you may request the applicable permitting authority to approve a period of planned routine maintenance for the control device needed to meet requirements in your operation, maintenance, and monitoring plan. You must present data to the applicable permitting authority demonstrating that the period of planned maintenance results in overall emissions reductions. During this pre-approved time period, the emission control device may be taken out of service while maintenance is performed on the control device and/or one of the process units while the remaining process unit(s) continue to operate. During the period the emission control device is unable to operate, the emission limits, operating limits, and monitoring requirements applicable to the unit that is operating and the wet scrubber emission control device do not apply. The applicable permitting authority may require that you take specified actions to minimize emissions during the period of planned maintenance.

(1) You must submit a written request to the applicable permitting authority at least 6 months before the planned maintenance is scheduled to begin with a copy to the EPA Regional Administrator.

(2) Your written request must contain the information in paragraphs (j)(2)(i) through (v) of this section.

(i) A description of the planned routine maintenance to be performed during the next 6 months and why it is necessary.

(ii) The date the planned maintenance will begin and end.

(iii) A quantified estimate of the HAP and criteria pollutant emissions that will be emitted during the period of planned maintenance.

(iv) An analysis showing the emissions reductions resulting from the planned maintenance as opposed to delaying the maintenance until the next unit turnaround.

(v) Actions you will take to minimize emissions during the period of planned maintenance.

§63.1576 What records must I keep, in what form, and for how long?

(a) You must keep the records specified in paragraphs (a)(1) through (3) of this section.

(1) A copy of each notification and report that you submitted to comply with this subpart, including all documentation supporting any initial notification or Notification of Compliance Status that you submitted, according to the requirements in §63.10(b)(2)(xiv).

(2) The records in §63.6(e)(1)(iii) through (v) related to startup, shutdown, and malfunction.

(3) Records of performance tests, performance evaluations, and opacity and visible emission observations as required in §63.10(b)(2)(viii).

(b) For each continuous emission monitoring system and continuous opacity monitoring system, you must keep the records required in paragraphs (b)(1) through (5) of this section.

(1) Records described in §63.10(b)(2)(vi) through (xi).

(2) Monitoring data for continuous opacity monitoring systems during a performance evaluation as required in §63.6(h)(7)(i) and (ii).

(3) Previous (i.e., superceded) versions of the performance evaluation plan as required in §63.8(d)(3).

(4) Requests for alternatives to the relative accuracy test for continuous emission monitoring systems as required in §63.8(f)(6)(i).

(5) Records of the date and time that each deviation started and stopped, and whether the deviation occurred during a period of startup, shutdown, or malfunction or during another period.

(c) You must keep the records in §63.6(h) for visible emission observations.

(d) You must keep records required by Tables 6, 7, 13, and 14 of this subpart (for catalytic cracking units); Tables 20, 21, 27 and 28 of this subpart (for catalytic reforming units); Tables 34 and 35 of this subpart (for sulfur recovery units); and Table 39 of this subpart (for bypass lines) to show continuous

compliance with each emission limitation that applies to you.

(e) You must keep a current copy of your operation, maintenance, and monitoring plan onsite and available for inspection. You also must keep records to show continuous compliance with the procedures in your operation, maintenance, and monitoring plan.

(f) You also must keep the records of any changes that affect emission control system performance including, but not limited to, the location at which the vent stream is introduced into the flame zone for a boiler or process heater.

(g) Your records must be in a form suitable and readily available for expeditious review according to § 63.10(b)(1).

(h) As specified in § 63.10(b)(1), you must keep each record for 5 years following the date of each occurrence, measurement, maintenance, corrective action, report, or record.

(i) You must keep each record on site for at least 2 years after the date of each occurrence, measurement, maintenance, corrective action, report, or record, according to § 63.10(b)(1). You can keep the records offsite for the remaining 3 years.

OTHER REQUIREMENTS AND INFORMATION

§ 63.1577 What parts of the General Provisions apply to me?

Table 44 of this subpart shows which parts of the General Provisions in §§ 63.1 through 63.15 apply to you.

§ 63.1578 Who implements and enforces this subpart?

(a) This subpart can be implemented and enforced by us, the U.S. EPA, or a delegated authority such as your State, local, or tribal agency. If the U.S. EPA Administrator has delegated authority to your State, local, or tribal agency, then that Agency has the authority to implement and enforce this subpart. You should contact your U.S. EPA Regional Office to find out if this subpart is delegated to your State, local, or tribal agency.

(b) In delegating implementation and enforcement authority of this subpart to a State, local, or tribal agency under 40 CFR part 63, subpart E, the authorities contained in paragraph (c) of this section are retained by the Administrator of the U.S. EPA and are not transferred to the State, local, or tribal agency.

(c) The authorities that will not be delegated to State, local, or tribal agencies are listed in paragraphs (c)(1) through (5) of this section.

(1) Approval of alternatives to the non-opacity emission limitations and work practice standards in §§ 63.1564 through 63.1569 under § 63.6(g).

(2) Approval of alternative opacity emission limitations in §§ 63.1564 through 63.1569 under § 63.6(h)(9).

(3) Approval of major alternatives to test methods under § 63.7(e)(2)(ii) and (f) and as defined in § 63.90.

(4) Approval of major alternatives to monitoring under § 63.8(f) and as defined in § 63.90.

(5) Approval of major alternatives to recordkeeping and reporting under § 63.10(f) and as defined in § 63.90.

§ 63.1579 What definitions apply to this subpart?

Terms used in this subpart are defined in the Clean Air Act (CAA), in 40 CFR 63.2, the General Provisions of this part (§§ 63.1 through 63.15), and in this section as listed.

Boiler means any enclosed combustion device that extracts useful energy in the form of steam and is not an incinerator.

Catalytic cracking unit means a refinery process unit in which petroleum derivatives are continuously charged; hydrocarbon molecules in the presence of a catalyst suspended in a fluidized bed are fractured into smaller molecules, or react with a contact material suspended in a fluidized bed to improve feedstock quality for additional processing; and the catalyst or contact material is continuously regenerated by burning off coke and other deposits. The unit includes, but is not limited to, the riser, reactor, regenerator, air blowers, spent catalyst or contact material stripper, catalyst or contact material recovery equipment, and regenerator equipment for controlling air pollutant emissions and equipment used for heat recovery.

Catalytic cracking unit catalyst regenerator means one or more regenerators (multiple regenerators) which comprise

that portion of the catalytic cracking unit in which coke burn-off and catalyst or contact material regeneration occurs and includes the regenerator combustion air blower(s).

Catalytic reforming unit means a refinery process unit that reforms or changes the chemical structure of naphtha into higher octane aromatics through the use of a metal catalyst and chemical reactions that include dehydrogenation, isomerization, and hydrogenolysis. The catalytic reforming unit includes the reactor, regenerator (if separate), separators, catalyst isolation and transport vessels (e.g., lock and lift hoppers), recirculation equipment, scrubbers, and other ancillary equipment.

Catalytic reforming unit regenerator means one or more regenerators which comprise that portion of the catalytic reforming unit and ancillary equipment in which the following regeneration steps typically are performed: depressurization, purge, coke burn-off, catalyst rejuvenation with a chloride (or other halogenated) compound(s), and a final purge. The catalytic reforming unit catalyst regeneration process can be done either as a semi-regenerative, cyclic, or continuous regeneration process.

Coke burn-off means the coke removed from the surface of the catalytic cracking unit catalyst or the catalytic reforming unit catalyst by combustion in the catalyst regenerator. The rate of coke burn-off is calculated using Equation 2 in §63.1564.

Combustion device means an individual unit of equipment such as a flare, incinerator, process heater, or boiler used for the destruction of organic HAP or VOC.

Combustion zone means the space in an enclosed combustion device (e.g., vapor incinerator, boiler, furnace, or process heater) occupied by the organic HAP and any supplemental fuel while burning. The combustion zone includes any flame that is visible or luminous as well as that space outside the flame envelope in which the organic HAP continues to be oxidized to form the combustion products.

Contact material means any substance formulated to remove metals, sulfur, nitrogen, or any other contaminants from petroleum derivatives.

Continuous regeneration reforming means a catalytic reforming process characterized by continuous flow of catalyst material through a reactor where it mixes with feedstock, and a portion of the catalyst is continuously removed and sent to a special regenerator where it is regenerated and continuously recycled back to the reactor.

Control device means any equipment used for recovering, removing, or oxidizing HAP in either gaseous or solid form. Such equipment includes, but is not limited to, condensers, scrubbers, electrostatic precipitators, incinerators, flares, boilers, and process heaters.

Cyclic regeneration reforming means a catalytic reforming process characterized by continual batch regeneration of catalyst in situ in any one of several reactors (e.g., 4 or 5 separate reactors) that can be isolated from and returned to the reforming operation while maintaining continuous reforming process operations (i.e., feedstock continues flowing through the remaining reactors without change in feed rate or product octane).

Deviation means any instance in which an affected source subject to this subpart, or an owner or operator of such a source:

(1) Fails to meet any requirement or obligation established by this subpart, including but not limited to any emission limit, operating limit, or work practice standard;

(2) Fails to meet any term or condition that is adopted to implement an applicable requirement in this subpart and that is included in the operating permit for any affected source required to obtain such a permit; or

(3) Fails to meet any emission limit, operating limit, or work practice standard in this subpart during startup, shutdown, or malfunction, regardless of whether or not such failure is permitted by this subpart.

Emission limitation means any emission limit, opacity limit, operating limit, or visible emission limit.

Flame zone means the portion of a combustion chamber of a boiler or process heater occupied by the flame envelope created by the primary fuel.

Flow indicator means a device that indicates whether gas is flowing, or whether the valve position would allow gas to flow, in or through a line.

Fuel gas system means the offsite and onsite piping and control system that gathers gaseous streams generated by the source, may blend them with sources of gas, if available, and transports the blended gaseous fuel at suitable pressures for use as fuel in heaters, furnaces, boilers, incinerators, gas turbines, and other combustion devices located within or outside of the refinery. The fuel is piped directly to each individual combustion device, and the system typically operates at pressures over atmospheric. The gaseous streams can contain a mixture of methane, light hydrocarbons, hydrogen, and other miscellaneous species.

HCl means for the purposes of this subpart, gaseous emissions of hydrogen chloride that serve as a surrogate measure for total emissions of hydrogen chloride and chlorine as measured by Method 26 or 26A in appendix A to part 60 of this chapter or an approved alternative method.

Incinerator means an enclosed combustion device that is used for destroying organic compounds, with or without heat recovery. Auxiliary fuel may be used to heat waste gas to combustion temperatures. An incinerator may use a catalytic combustion process where a substance is introduced into an exhaust stream to burn or oxidize contaminants while the substances itself remains intact, or a thermal process which uses elevated temperatures as a primary means to burn or oxidize contaminants.

Ni means, for the purposes of this subpart, particulate emissions of nickel that serve as a surrogate measure for total emissions of metal HAP, including but not limited to: antimony, arsenic, beryllium, cadmium, chromium, cobalt, lead, manganese, nickel, and selenium as measured by Method 29 in appendix A to part 60 of this chapter or by an approved alternative method.

Oxidation control system means an emission control system which reduces emissions from sulfur recovery units by converting these emissions to sulfur dioxide.

PM means, for the purposes of this subpart, emissions of particulate matter that serve as a surrogate measure of the total emissions of particulate matter and metal HAP contained in the particulate matter, including but not limited to: antimony, arsenic, beryllium, cadmium, chromium, cobalt, lead, manganese, nickel, and selenium as measured by Methods 5B or 5F in appendix A to part 60 of this chapter or by an approved alternative method.

Process heater means an enclosed combustion device that primarily transfers heat liberated by burning fuel directly to process streams or to heat transfer liquids other than water.

Process vent means, for the purposes of this subpart, a gas stream that is continuously or periodically discharged during normal operation of a catalytic cracking unit, catalytic reforming unit, or sulfur recovery unit, including gas streams that are discharged directly to the atmosphere, gas streams that are routed to a control device prior to discharge to the atmosphere, or gas streams that are diverted through a product recovery device line prior to control or discharge to the atmosphere.

Reduced sulfur compounds means hydrogen sulfide, carbonyl sulfide, and carbon disulfide.

Reduction control system means an emission control system which reduces emissions from sulfur recovery units by converting these emissions to hydrogen sulfide.

Responsible official means responsible official as defined in 40 CFR 70.2.

Semi-regenerative reforming means a catalytic reforming process characterized by shutdown of the entire reforming unit (e.g., which may employ three to four separate reactors) at specified intervals or at the owner's or operator's convenience for in situ catalyst regeneration.

Sulfur recovery unit means a process unit that recovers elemental sulfur from gases that contain reduced sulfur compounds and other pollutants, usually by a vapor-phase catalytic reaction of sulfur dioxide and hydrogen sulfide. This definition does not include a unit where the modified reaction is carried out in a water solution which

contains a metal ion capable of oxidizing the sulfide ion to sulfur, e.g., the LO–CAT II process.

TOC means, for the purposes of this subpart, emissions of total organic compounds, excluding methane and ethane, that serve as a surrogate measure of the total emissions of organic HAP compounds, including but not limited to, acetaldehyde, benzene, hexane, phenol, toluene, and xylenes and non-HAP VOC as measured by Method 25 or 25A in appendix A to part 60 of this chapter or an approved alternative method.

TRS means, for the purposes of this subpart, emissions of total reduced sulfur compounds, expressed as an equivalent sulfur dioxide concentration, that serve as a surrogate measure of the total emissions of sulfide HAP carbonyl sulfide and carbon disulfide as measured by Method 15 in appendix A to part 60 of this chapter or by an approved alternative method.

Work practice standard means any design, equipment, work practice, or operational standard, or combination thereof, that is promulgated pursuant to section 112(h) of the CAA.

TABLE 1 TO SUBPART UUU OF PART 63.—METAL HAP EMISSION LIMITS FOR CATALYTIC CRACKING UNITS

[As stated in § 63.1564(a)(1), you must meet each emission limitation in the following table that applies to you]

For each new or existing catalytic cracking unit * * *	You must meet the following emission limits for each catalyst regenerator vent * * *
1. Subject to the new source performance standard (NSPS) for PM in 40 CFR 60.102.	PM emissions must not exceed 1.0 kilogram (kg) per 1,000 kg (1.0 lb/1,000 lb) of coke burn-off in the catalyst regenerator; if the discharged gases pass through an incinerator or waste heat boiler in which you burn auxiliary or supplemental liquid or solid fossil fuel, you must limit the incremental rate of PM to no more than 43.0 grams per Megajoule (g/MJ) or 0.10 pounds per million British thermal units (lb/million Btu) of heat input attributable to the liquid or solid fossil fuel; and the opacity of emissions must not exceed 30 percent, except for one 6-minute average opacity reading in any 1-hour period.
2. Option 1: NSPS requirements not subject to the NSPS for PM in 40 CFR 60.102.	PM emissions must not exceed 1.0 kg/1,000 kg (1.0 lb/1,000 lb) of coke burn-off in the catalyst regenerator; if the discharged gases pass through an incinerator or waste heat boiler in which you burn auxiliary or in supplemental liquid or solid fossil fuel, you must limit the incremental rate of PM to no more than 43.0 g/MJ or lb/million Btu of heat input attributable to the liquid or solid fossil fuel; and the opacity of emissions must not exceed 30 percent, except for one 6-minute average opacity reading in any 1-hour period.
3. Option 2: PM limit not subject to the NSPS for PM in 40 CFR 60.102.	PM emissions must not exceed 1.0 kg/1,000 kg (1.0 lb/1,000 lbs) of coke burn-off in the catalyst regenerator.
4. Option 3: Ni lb/hr not subject to the NSPS for PM in 40 CFR 60.102.	Nickel (Ni) emissions must not exceed 13,000 milligrams per hour (mg/hr) (0.029 lb/hr).
5. Option 4: Ni Lb/1,000 lbs of coke burn-off not subject to the NSPS for PM in 40 CFR 60.102.	Ni emissions must not exceed 1.0 mg/kg (0.001 lb/1,000 lbs) of coke burn-off in the catalyst regenerator.

TABLE 2 TO SUBPART UUU OF PART 63.—OPERATING LIMITS FOR METAL HAP EMISSIONS FROM CATALYTIC CRACKING UNITS

[As stated in § 63.1564(a)(2), you must meet each operating limit in the following table that applies to you]

For each new or existing catalytic cracking unit * * *	For this type of continuous monitoring system * * *	For this type of control device * * *	You must meet this operating limit * * *
1. Subject to the NSPS for PM in 40 CFR 60.102.	Continuous opacity monitoring system.	Not applicable	Not applicable.
2. Option 1: NSPS requirements not subject to the NSPS for PM in 40 CFR 60.102.	Continuous opacity monitoring system.	Not applicable	Not applicable.
3. Option 2: PM limit not subject to the NSPS for PM in 40 CFR 60.102.	a. Continuous opacity monitoring system.	Electrostatic precipitator	Maintain the hourly average opacity of emissions from your catalyst regenerator vent no higher than the site-specific opacity limit established during the performance test.
	b. Continuous parameter monitoring systems.	Electrostatic precipitator	Maintain the daily average gas flow rate no higher than the limit established in the performance test; and maintain the daily average voltage and secondary current (or total power input) above the limit established in the performance test.
	c. Continuous parameter monitoring systems.	Wet scrubber	Maintain the daily average pressure drop above the limit established in the performance test (not applicable to a wet scrubber of the non-venturi jet-ejector design); and maintain the daily average liquid-to-gas ratio above the limit established in the performance test.
4. Option 3: Ni lb/hr not subject to the NSPS for PM in 40 CFR 60.102.	a. Continuous opacity monitoring system.	Electrostatic precipitator	Maintain the daily average Ni operating value no higher than the limit established during the performance test.
	b. Continuous parameter monitoring systems.	i. Electrostatic precipitator	Maintain the daily average gas flow rate no higher than the limit established during the performance test; maintain the monthly rolling average of the equilibrium catalyst Ni concentration no higher than the limit established during the performance test; and maintain the daily average voltage and secondary current (or total power input) above the established during the performance test.

		ii. Wet scrubber	Maintain the monthly rolling average of the equilibrium catalyst Ni concentration no higher than the limit established during the performance test; maintain the daily average pressure drop above the limit established during the performance test (not applicable to a non-venturi wet scrubber of the jet-ejector design); and maintain the daily average liquid-to-gas ratio above the limit established during the performance test.
5. Option 4: Ni lb/1,000 lbs of coke burn-off not subject to the NSPS for PM in 40 CFR 60.102.	a. Continuous opacity monitoring system	Electrostatic precipitator	Maintain the daily average Ni operating value no higher than the Ni operating limit established during the performance test.
	b. Continuous parameter monitoring systems.	i. Electrostatic precipitator	Maintain the monthly rolling average of the equilibrium catalyst Ni concentration no higher than the limit established during the performance test; and maintain the daily average voltage and secondary current for total power input) above the limit established during the performance test.
		ii. Wet scrubber	Maintain the monthly rolling average of the equilibrium catalyst Ni concentration no higher than the limit established during the performance test; maintain the daily average pressure drop above the limit established during the performance test (not applicable to a non-venturi wet scrubber of the jet-ejector design); and maintain the daily average liquid-to-gas ratio above the limit established during the performance test.

TABLE 3 TO SUBPART UUU OF PART 63.—CONTINOUS MONITORING SYSTEMS FOR METAL HAP EMISSIONS FROM CATALYTIC CRACKING UNITS

[As stated in § 63.1564(b)(1), you must meet each requirement in the following table that applies to you]

For each new or existing catalytic cracking unit * * *	If your catalytic cracking unit is * * *	And you use this type of control device for your vent * * *	You must install, operate, and maintain a * * *
1. Subject to the NSPS for PM in 40 CFR 60.102.	Any size	Electrostatic precipitator or wet scrubber or no control device.	Continous opacity monitoring system to measure and record the opacity of emissions from each catalyst regenerator vent.
2. Option 1: NSPS limits not subject to the NSPS for PM in 40 CFR 60.102.	Any size	Electrostatic precipitator or wet scrubber or no control device.	Continuous opacity monitoring system to measure and record the opacity of emissions from each catalyst regenerator vent.

[As stated in § 63.1564(b)(1), you must meet each requirement in the following table that applies to you]

For each new or existing catalytic cracking unit * * *	If your catalytic cracking unit is * * *	And you use this type of control device for your vent * * *	You must install, operate, and maintain a * * *
3. Option 2: PM limit not subject to the NSPS for PM in 40 CFR 60.102.	a. Over 20,000 barrels per day fresh feed capacity.	Electrostatic precipitator	Continous opacity monitoring system to measure and record the opacity of emissions from each catalyst regenerator vent.
	b. Up to 20,000 barrels per day fresh feed capacity.	Electrostatic precipitator	Continuous opacity monitoring system to measure and record the opacity of emissions from each catalyst regenerator vent; or continuous parameter monitoring systems to measure and record the gas flow rate to the control device and the voltage and secondary current (or total power input) to the control device.
	c. Any size	i. Wet scrubber	(1) Continuous parameter monitoring system to measure and record the pressure drop across the scrubber, gas flow rate to the scrubber, and total liquid (or scrubbing liquor) flow rate to the scrubber. (2) If you use a wet scrubber of the non-venturi jet-ejector design, you're not required to install and operate a continuous parameter monitoring system for pressure drop.
	d. Any size	No electrostatic precipitator or wet scrubber.	Continous opacity monitoring system to measure and record the opacity of emissions from each catalyst regenerator vent.
4. Option 3: Ni lb/hr not subject to the NSPS for PM in 40 CFR 60.102.	a. Over 20,000 barrels per day fresh feed capacity.	Electrostatic precipitator	Continous opacity monitoring system to measure and record the opacity of emissions from each catalyst regenerator vent and continuous parameter monitoring system to measure and record the gas flow rate.
	b. Up to 20,000 barrels per day fresh feed capacity.	Electrostatic precipitator	Continuous opacity monitoring system to measure and record the opacity of emissions from each catalyst regenerator vent and continuous parameter monitoring system to measure and record the gas flow rate; or continuous parameter monitoring systems to measure and record the gas flow rate and the voltage and secondary current (or total power input) to the control device.

	c. Any size	Wet scrubber	(1) Continuous parameter monitoring system to measure and record the pressure drop across the scrubber, gas flow rate to the scrubber, and total liquid (or scrubbing liquor) flow rate to the scrubber. (2) If you use a wet scrubber of the non-venturi jet-ejector, design, you're not required to install and operate a continuous parameter monitoring system for pressure drop.
	d. Any size	No electrostatic precipitator or wet scrubber.	Continuous opacity monitoring system to measure and record the opacity of emissions from each catalyst regenerator vent and continuous parameter monitoring system to measure and record the gas flow rate.
5. Option 4: Ni lb/1,000 lbs of coke burn-off not subject to the NSPS for PM in 40 CFR 60.102.	a. Over 20,000 barrels per day fresh feed capacity.	Electrostatic precipitator	Continuous opacity monitoring system to measure and record the opacity of emissions from each catalyst regenerator vent and continuous parameter monitoring system to measure and record the gas flow rate.
	b. Up to 20,000 barrels per day fresh feed capacity.	Electrostatic precipitator	Continuous opacity monitoring system to measure and record the opacity of emissions from each catalyst regenerator vent and continuous parameter monitoring system to measure and record the gas flow rate; or continuous parameter monitoring systems to measure and record the gas flow rate and the voltage and secondary current (or total power input) to the control device.
	c. Any size	Wet scrubber	Continuous parameter monitoring system to measure and record the pressure drop across the scrubber, gas flow rate to the scrubber, and total liquid (or scrubbing liquor) flow rate to the scrubber.
	d. Any size	No electrostatic precipitator or wet scrubber	Continuous opacity monitoring system to measure and record the opacity of emissions from each catalyst regenerator vent and continuous parameter monitoring system to measure and record the gas flow rate.

TABLE 4 TO SUBPART UUU OF PART 63.—REQUIREMENTS FOR PERFORMANCE TESTS FOR METAL HAP EMISSIONS FROM CATALYTIC CRACKING UNITS NOT SUBJECT TO THE NEW SOURCE PERFORMANCE STANDARD (NSPS) FOR PARTICULATE MATTER (PM)

[As stated in § 63.1564(b)(2), you must meet each requirement in the following table that applies to you]

For each new or existing catalytic cracking unit catalyst regenerator vent * * *	You must * * *	Using * * *	According to these requirements * * *
1. If you elect Option 1 in item 2 of Table 1, Option 2 in item 3 of Table 1, Option 3 in item 4 of Table 1, or Option 4 in item 5 of Table 1 of this subpart.	a. Select sampling port's location and the number of traverse ports.	Method 1 or 1A in appendix A to part 60 of this chapter.	Sampling sites must be located at the outlet of the control device or the outlet of the regenerator, as applicable, and prior to any releases to the atmosphere.
	b. Determine velocity and volumetric flow rate.	Method 2, 2A, 2C, 2D, 2F, or 2G in appendix A to part 60 of this chapter, as applicable.	
	c. Conduct gas molecular weight analysis.	Method 3, 3A, or 3B in appendix A to part 60 of this chapter, as applicable.	
	d. Measure moisture content of the stack gas.	Method 4 in appendix A to part 60 of this chapter.	
	e. If you use an electro-static precipitator, record the total number of fields in the control system and how many operated during the applicable performance test.		
	f. If you use a wet scrubber, record the total amount (rate) of water (or scrubbing liquid) and the amount (rate) of make-up liquid to the scrubber during each test run.		
2. Option 1: Elect NSPS	a. Measure PM emissions	Method 5B or 5F (40 CFR part 60, appendix A) to determine PM emissions and associated moisture content for units without wet scrubbers. Method 5B (40 CFR part 60, appendix A) to determine PM emissions and associated moisture content for unit with wet scrubber.	You must maintain a sampling rate of at least 0.15 dry standard cubic meters per minute (dscm/min) (0.53 dry standard cubic feet per minute (dscf/min)).
	b. Compute PM emission rate (lbs/1,000 lbs) of coke burn-off.	Equations 1, 2, and 3 of § 63.1564 (if applicable).	
	c. Measure opacity of emissions.	Continuous opacity monitoring system.	You must collect opacity monitoring data every 10 seconds during the entire period of the initial Method 5 performance test and reduce the data to 6-minute averages.
3. Option 2: PM limit	a. Measure PM emissions	See item 2. of this table	See item 2. of this table.
	b. Compute coke burn-off rate and PM emission rate.	Equations 1 and 2 of § 63.1564	

	c. Establish your site-specific opacity operating limit if you use a continuous opacity monitoring system.	Data from the continuous opacity monitoring system.	You must collect opacity monitoring data every 10 seconds during the entire period of the initial Method 5 performance test and reduce the data to 6-minute averages; determine and record the hourly average opacity from all the 6-minute averages; and compute the site-specific limit using Equation 4 of § 63.1564.
4. Option 3: Ni lb/hr	a. Measure concentration of Ni and total metal HAP.	Method 29 (40 CFR part 60, appendix A).	You must maintain a sampling rate of at least 0.028 dscm/min (0.74 dscf/min).
	b. Compute Ni emission rate (lb/hr).	Equation 5 of § 63.1564	
	c. Determine the equilibrium catalyst Ni concentration.	EPA Method 6010B or 6020 or EPA Method 7520 or 7521 in SW–846 [1]; or, you can use an alternative method satisfactory to the Administrator.	You must obtain 1 sample for each of the 3 runs; determine and record the average equilibrium catalyst Ni concentration for each of the 3 runs; and you may adjust the results for an individual run to the maximum value using Equation 1 of § 63.1571.
	d. If you use a continuous opacity monitoring system, establish your site-specific Ni operating limit.	i. Equations 6 and 7 of § 63.1564 using data from continuous opacity monitoring system, gas flow rate, results of equilibrium catalyst Ni concentration analysis, and Ni emission rate from Method 29 test.	(1) You must collect opacity monitoring data every 10 seconds during the entire period of the initial Ni performance test; reduce the data to 6-minute averages; and determine and record the hourly average opacity from all the 6-minute averages. (2) You must collect gas flow rate monitoring data every 15 minutes during the entire period of the initial Ni performance test; measure the gas flow as near as practical to the continuous opacity monitoring system; and determine and record the hourly average actual gas flow rate from all the readings.
5. Option 4: Ni lbs/1,000 lbs of coke burn-off.	a. Measure concentration of Ni and total metal HAP.	Method 29 (40 CFR part 60, appendix A).	You must maintain a sampling rate of at least 0.028 dscm/min (0.74 dscf/min).
	b. Compute Ni emission rate (lb/1,000 lbs of coke burn-off).	Equations 1 and 8 of § 63.1564.	
	c. Determine the equilibrium catalyst Ni concentration.	EPA Method 6010B or 6020 or EPA Method 7520 or 7521 (SW–846) [1]; or, you can use an alternative method satisfactory to the Administrator.	You must obtain 1 sample for each of the 3 runs; determine and record the equilibrium catalyst Ni concentration for each of the 3 samples; and you may adjust the laboratory results to the maximum value using Equation 2 of § 63.1571.

[As stated in § 63.1564(b)(2), you must meet each requirement in the following table that applies to you]

For each new or existing catalytic cracking unit catalyst regenerator vent * * *	You must * * *	Using * * *	According to these requirements * * *
	d. If you use a continuous opacity monitoring system, establish your site-specific Ni operating limit.	i. Equations 9 and 10 of § 63.1564 with data from continuous opacity monitoring system, coke burn-off rate, gas flow rate, results of equilibrium catalyst Ni concentration analysis, and Ni emission rate from Method 29 test.	(1) You must collect opacity monitoring data every 10 seconds during the entire period of the initial Ni performance test; reduce the data to 6-minute averages; and determine and record the hourly average opacity from all the 6-minute averages. (2) You must collect gas flow rate monitoring data every 15 minutes during the entire period of the initial Ni performance test; measure the gas flow rate as near as practical to the continuous opacity monitoring system; and determine and record the hourly average actual gas flow rate from all the readings.
	e. Record the catalyst addition rate for each test and schedule for the 10-day period prior to the test.		
6. If you elect Option 2 in Entry 3 in Table 1, Option 3 in Entry 4 in Table 1, or Option 4 in Entry 5 in Table 1 of this subpart and you use continuous parameter monitoring systems.	a. Establish each operating limit in Table 2 of this subpart that applies to you.	Data from the continuous parameter monitoring systems and applicable performance test methods.	
	b. Electrostatic precipitator or wet scrubber: gas flow rate.	Data from the continuous parameter monitoring systems and applicable performance test methods.	You must collect gas flow rate monitoring data every 15 minutes during the entire period of the initial performance test; and determine and record the maximum hourly average gas flow rate from all the readings.
	c. Electrostatic precipitator: voltage and secondary current (or total power input).	Data from the continuous parameter monitoring systems and applicable performance test methods.	You must collect voltage and secondary current (or total power input) monitoring data every 15 minutes during the entire period of the initial performance test; and determine and record the minimum hourly average voltage and secondary current (or total power input) from all the readings.
	d. Electrostatic precipitator or wet scrubber: equilibrium catalyst Ni concentration.	Results of analysis for equilibrium catalyst Ni concentration.	You must determine and record the average equilibrium catalyst Ni concentration for the 3 runs based on the laboratory results. You may adjust the value using Equation 1 or 2 of § 63.1571 as applicable.

	e. Wet scrubber: pressure drop (not applicable to non-venturi scrubber of jet ejector design).	Data from the continuous parameter monitoring systems and applicable performance test methods.	You must collect pressure drop monitoring data every 15 minutes during the entire period of the initial performance test; and determine and record the minimum hourly average pressure drop from all the readings.
	f. Wet scrubber: liquid-to-gas ratio	Data from the continuous parameter monitoring systems and applicable performance test methods.	You must collect gas flow rate and total water (or scrubbing liquid) flow rate monitoring data every 15 minutes during the entire period of the initial performance test; determine and record the hourly average gas flow rate and total water (or scrubbing liquid) flow rate from all the readings; and determine and record the minimum liquid-to-gas ratio.
	g. Alternative procedure for gas flow rate.	Data from the continuous parameter monitoring systems and applicable performance test methods.	You must collect air flow rate monitoring data or determine the air flow rate using control room instrumentation every 15 minutes during the entire period of the initial performance test; determine and record the hourly average rate of all the readings; and determine and record the maximum gas flow rate using Equation 1 of § 63.1573.

[1] EPA Method 6010B, Inductively Coupled Plasma-Atomic Emission Spectrometry, EPA Method 6020, Inductively Coupled Plasma-Mass Spectrometry, EPA Method 7520, Nickel Atomic Absorption, Direct Aspiration, and EPA Method 7521, Nickel Atomic Absorption, Direct Aspiration are included in ''Test Methods for Evaluating Solid Waste, Physical/Chemical Methods,'' EPA Publication SW–846, Revision 5 (April 1998). The SW–846 and Updates (document number 955–001–00000–1) are available for purchase from the Superintendent of Documents, U.S. Government Printing Office, Washington, DC 20402, (202) 512–1800; and from the National Technical Information Services (NTIS), 5285 Port Royal Road, Springfield, VA 22161, (703) 487–4650. Copies may be inspected at the Air and Radiation Docket and Information Center, U.S. Environmental Protection Agency, 401 M Street, SW, Washington, DC; or at the Office of the Federal Register, 800 North Capitol Street, NW, Suite 700, Washington, DC.

TABLE 5 TO SUBPART UUU OF PART 63.—INITIAL COMPLIANCE WITH METAL HAP EMISSION LIMITS FOR CATALYTIC CRACKING UNITS

[As stated in § 63.1564(b)(5), you must meet each requirement in the following table that applies to you]

For each new and existing catalytic cracking unit catalyst regenerator vent * * *	For the following emission limit * * *	You have demonstrated initial compliance if * * *
1. Subject to the NSPS for PM in 40 CFR 60.102.	PM emissions must not exceed 1.0 kg/1,000 kg (1.0 lb/1,000 lb) of coke burn-off in the catalyst regenerator; if the discharged gases pass through an incinerator or waste heat boiler in which you burn auxiliary or supplemental liquid or solid fossil fuel, you must limit the incremental rate of PM to no more than 43.0 grams per Megajoule (g/MJ) or 0.10 pounds per million British thermal units (lb/million Btu) of heat input attributable to the liquid or solid fossil fuel; and the opacity of emissions 30 percent, except for one 6-minute average opacity reading in any 1-hour period.	You have already conducted a performance test to demonstrate initial compliance with the NSPS and the measured PM emission rate is less than or equal to 1.0 kg/1,000 kg (1.0 lb/1,000 lb) of coke burn-off in the catalyst regenerator. As part of the Notification of Compliance Status, you must certify that your vent meets the PM limit. You are not required to do another performance test to demonstrate initial compliance. If applicable, you have already conducted a performance test to demonstrate initial compliance with the NSPS and the measured PM rate is less than or equal to 43.0 g/MJ or 0.010 lb/million Btu of heat input attributable to the liquid or solid fossil fuel. As part of the Notification of Compliance Status, you must certify that your vent meets the PM emission limit. You are not required to do another performance test to demonstrate initial compliance. You have already conducted a performance test to demonstrate initial compliance with the NSPS and the average hourly opacity of emissions is no more than 30 percent. Except: one 6-minute average in any 1-hour period can exceed 30 percent. As part of the Notification of Compliance Status, you must certify that your vent meets the opacity limit. You are not required to do another performance test to demonstrate initial compliance. You have already conducted a performance evaluation to demonstrate initial compliance with the applicable performance specification. As part of your Notification of Compliance Status, you certify that your continuous opacity monitoring system meets the requirements in § 63.1572. You are not required to do a performance evaluation to demonstrate initial compliance.

[As stated in § 63.1564(b)(5), you must meet each requirement in the following table that applies to you]

For each new and existing catalytic cracking unit catalyst regenerator vent * * *	For the following emission limit * * *	You have demonstrated initial compliance if * * *
2. Option 1: Elect NSPS not subject to the NSPS for PM.	PM emissions must not exceed 1.0 kg/1,000 kg (1.0 lb/1,000 lb) of coke burn-off in the catalyst regenerator; if the discharged gases pass through an incinerator or waste heat boiler in which you burn auxiliary or supplemental liquid or solid fossil fuel, you must limit the incremental rate of PM to no more than 43.0 grams per Megajoule (g/MJ) or 0.10 pounds per million British thermal units (lb/million Btu) of heat input attributable to the liquid or solid fossil fuel; and the opacity of emissions must not exceed 30 percent, except for one 6-minute average opacity reading in any 1-hour period.	The average PM emission rate, measured using EPA method 5 over the period of the initial performance test, is no higher than 1.0 kg/1,000 kg (1.0 lb/1,000 lbs) of coke burn-off in the catalyst regenerator. The PM emission rate is calculated using Equations 1 and 2 of the § 63.1564. If applicable, the average PM emission rate, measured using EPA Method 5 over the period of the initial performance test, is no higher than 43.0 g/MJ or 0.010 lb/million Btu of heat input attributable to the liquid or solid fossil fuel. The PM emission rate is calculated using Equation 3 of § 63.1564; no more than one 6-minute average measured by the continuous opacity monitoring system exceeds 30 percent opacity in any 1-hour period over the period of the performance test; and your performance evaluation shows the continuous opacity monitoring system meets the applicable requirements in § 63.1572.
3. Option 2: not subject to the NSPS for PM.	PM emissions must not exceed 1.0 kg/1,000 kg (1.0 lb/1,000 lb) of coke burn-off in the catalyst regenerator.	The average PM emission rate, measured using EPA Method 5 over the period of the initial performance test, is less than or equal to 1.0 kg/1,000 kg (1.0 lb/1,000 lbs) of coke burn-off in the catalyst regenerator. The PM emission rate is calculated using Equations 1 and 2 of § 63.1564; and if you use a continuous opacity monitoring system, your performance evaluation shows the system meets the applicable requirements in § 63.1572.
4. Option 3: not subject to the NSPS for PM.	Nickel (Ni) emissions from your catalyst regenerator vent must not exceed 13,000 mg/hr (0.029 lb/hr).	The average Ni emission rate, measured using Method 29 over the period of the initial performance test, is not more than 13,000 mg/hr (0.029 lb/hr). The Ni emission rate is calculated using Equation 5 of § 63.1564; and if you use a continuous opacity monitoring system, your performance evaluation shows the system meets the applicable requirements in § 63.1572.
5. Option 4: Ni lb/1,000 lbs of coke burn-off not subject to the NSPS for PM.	Ni emissions from your catalyst regenerator vent must not exceed 1.0 mg/kg (0.001 lb/1,000 lbs) of coke burn-off in the catalyst regenerator.	The average Ni emission rate, measured using Method 29 over the period of the initial performance test, is not more than 1.0 mg/kg (0.001 lb/1,000 lbs) of coke burn-off in the catalyst regenerator. The Ni emission rate is calculated using Equation 8 of § 63.1564; and if you use a continuous opacity monitoring system, your performance evaluation shows the system meets the applicable requirements in § 63.1572.

TABLE 6 TO SUBPART UUU OF PART 63.—CONTINUOUS COMPLIANCE WITH METAL HAP EMISSION LIMITS FOR CATALYTIC CRACKING UNITS

[As stated in § 63.1564(c)(1), you must meet each requirement in the following table that applies to you]

For each new and existing catalytic cracking unit * * *	Subject to this emission limit for your catalyst regenerator vent * * *	You must demonstrate continuous compliance by * * *
1. Subject to the NSPS for PM in 40 CFR 60.102.	a. PM emissions must not exceed 1.0 lb/1,000 lbs of coke burn-off in the catalyst regenerator; if the discharged gases pass through an incinerator or waste heat boiler in which you burn auxiliary or supplemental liquid or solid fossil fuel, incremental rate of PM can't exceed 43.0 g/MJ (0.10 lb/million Btu) of heat input attributable to the liquid or solid fossil fuel; and opacity of emissions can't exceed 30 percent, except for one 6-minute average opacity reading in any 1-hour period.	i. Determining and recording each day the average coke burn-off rate (thousands of kilograms per hour) using Equation 2 in § 63.1564 and the hours of operation for each catalyst regenerator; maintaining PM emission rate below 1.0 kg/1,000 kg (1.0 lb/1,000 lbs) of coke burn-off; if applicable, determining and recording each day the rate of combustion of liquid or solid fossil fuels (liters/hour or kilograms/hour) using Equation 3 of § 63.1564 and the hours of operation during which liquid or solid fossil-fuels are combusted in the incinerator-waste heat boiler; if applicable, maintaining PM rate below 43 g/MJ (0.10 lb/million Btu) of heat input attributable to the solid or liquid fossil fuel; collecting the continuous opacity monitoring data for each catalyst regenerator vent according to § 63.1572; and maintaining each 6-minute average at or below 30 percent except that one 6-minute average during a 1-hour period can exceed 30 percent.
2. Option 1: Elect NSPS not subject to the NSPS for PM in 40 CFR 60.102.	See item 1.a. of this table	See item 1.a.i. of this table.
3. Option 2: PM limit not subject to the NSPS for PM.	PM emissions must not exceed 1.0 lb/1,000 lbs of coke burn-off in the catalyst regenerator.	Determining and recording each day the average coke burn-off rate (thousands of kilograms per hour) and the hours of operation for each catalyst regenerator by Equation 2 of § 63.1564. You can use process data to determine the volumetric flow rate; and maintaining PM emission rate below 1.0 kg/1,000 kg (1.0 lb/1,000 lbs) of coke burn-off.
4. Option 3: Ni lb/hr not subject to the NSPS for PM.	Ni emissions must not exceed 13,000 mg/hr (0.029 lb/hr).	Maintaining Ni emission rate below 13,000 mg/hr (0.029 lb/hr).
5. Option 4: Ni lb/1,000 lbs of coke burn-off not subject to the NSPS for PM.	Ni emissions must not exceed 1.0 mg/kg (0.001 lb/1,000 lbs) of coke burn-off in the catalyst regenerator.	Determining and recording each day the average coke burn-off rate (thousands of kilograms per hour) and the hours of operation for each catalyst regenerator by Equation 2 of § 63.1564. You can use process data to determine the volumetric flow rate; and maintaining Ni emission rate below 1.0 mg/kg (0.001 lb/1,000 lbs) of coke burn-off in the catalyst regenerator.

TABLE 7 TO SUBPART UUU OF PART 63.—CONTINUOUS COMPLIANCE WITH OPERATING LIMITS FOR METAL HAP EMISSIONS FROM CATALYTIC CRACKING UNITS

[As stated in § 63.1564(c)(1), you must meet each requirement in the following table that applies to you]

For each new or existing catalytic cracking unit * * *	If you use * * *	For this operating limit * * *	You must demonstrate continuous compliance by * * *
1. Subject to NSPS for PM in 40 CFR 60.102	Continuous opacity monitoring system.	Not applicable	Complying with Table 6 of this subpart.
2. Option 1: Elect NSPS not subject to the NSPS for PM in 40 CFR 60.102.	Continuous opacity monitoring system.	Not applicable	Complying with Table 6 of this subpart.
3. Option 2: PM limit not subject to the NSPS for PM in 40 CFR 60.102.	a. Continuous opacity monitoring system.	The opacity of emissions from your catalyst regenerator vent must not exceed the site-specific opacity operating limit established during the performance test	Collecting the hourly average continuous opacity monitoring system data according to § 63.1572; and maintaining each 6-minute average in each 1-hour period at or below the site-specific limit.
	b. Continuous parameter monitoring systems—electrostatic precipitator.	i. The daily average gas flow rate to the control device must not exceed the operating limit established during the performance test.	Collecting the hourly and daily average gas flow rate monitoring data according to § 63.1572 [1]; and maintaining the daily average gas flow rate at limit or below the established during the performance test.
		ii. The daily average voltage and secondary current (or total power input) to the control device must not fall below the operating limit established during the performance test.	Collecting the hourly and daily average voltage and secondary current (or total power input) monitoring data according to § 63.1572; and maintaining the daily average voltage and secondary current (or total power input) at or above the limit established during the performance test.
	c. Continuous parameter monitoring systems—wet scrubber.	i. The daily average pressure drop across the scrubber must not fall below the operating limit established during the performance test.	Collecting the hourly and daily average pressure drop monitoring data according to § 63.1572; and maintaining the daily average press drop above the limit established during the performance test.
		ii. The daily average liquid-to-gas ratio must not fall below the operating limit established during the performance test.	Collecting the hourly average gas flow rate and water (or scrubbing liquid) flow rate monitoring data according to § 63.1572 [1]; determining and recording the hourly average liquid-to-gas ratio; determining and recording the daily average liquid-to-gas ratio; and maintaining the daily average liquid-to-gas ratio above the limit established during the performance test.

[As stated in § 63.1564(c)(1), you must meet each requirement in the following table that applies to you]

For each new or existing catalytic cracking unit * * *	If you use * * *	For this operating limit * * *	You must demonstrate continuous compliance by * * *
4. Option 3: Ni lb/hr not subject to the NSPS for PM in 40 CFR 60.102.	a. Continuous opacity monitoring system.	The daily average Ni operating value must not exceed the site-specific Ni operating limit established during the performance test.	Collecting the hourly average continuous opacity monitoring system data according § 63.1572; determining and recording equilibrium catalyst Ni concentration at least once a week collecting the hourly average gas flow rate monitoring data according to § 63.1572 [1]; determining and recording the hourly average Ni operating value using Equation 11 of § 63.1564; determining and recording the daily average Ni operating value; and maintaining the daily average Ni operating value below the site-specific Ni operating limit established the performance test.
	b. Continuous parameter monitoring systems—electrostatic precipitator.	i. The daily average gas flow rate to the control device must notice exceed the level established in the performance test.	See item 3.b.i. of this table.
		ii. The daily average voltage and secondary current (or total power input) must not fall below the level established in the performance test.	See item 3.b.ii. of this table.
		iii. The monthly rolling average of equilibrium catalyst Ni concentration must not exceed the level established during the performance test.	Determining the recording the equilibrium catalyst Ni concentration at least once a week; determining and recording the monthly rolling average of the equilibrium catalyst Ni concentration once each week using the weekly or most recent value; and maintaining the monthly rolling average below the limit established in the performance test
	c. Continuous parameter monitoring systems—wet scrubber.	i. The daily average pressure drop must not fall below the operating limit established in the performance test.	See item 3.c.i. of this table.
		ii. The daily average liquid-to-gas ratio must not fall below the operating limit established during the performance test.	See item 3.c.ii. of this table.
		iii. The monthly rolling average equilibrium catalyst Ni concentration must not exceed the level established during the performance test.	Determining and recording the equilibrium catalyst Ni concentration at least once a week; determining and recording the monthly rolling average of equilibrium catalyst Ni concentration once each week using the weekly or most recent value; and maintaining the monthly rolling average below the limit established in the performance test.

5. Option 4: Ni lb/ton of coke burn-off not subject to the NSPS for PM in 40 CFR 60.102	a. Continuous opacity monitoring system.	The daily average Ni operating value must not exceed the site-specific Ni operating limit established during the performance test.	Collecting the hourly average continuous opacity monitoring system data according to § 63.1572; collecting the hourly average gas flow rate monitoring data according to § 63.1572 [1]; determining and recording equilibrium catalyst Ni concentration at least once a week; determining and recording the hourly average Ni operating value using Equation 12 of § 63.1564; determining and recording the daily average Ni operating value; and maintaining the daily average Ni operating value below the site-specific Ni operating limit established during the performance test.
	b. Continuous parameter monitoring systems—electrostatic precipitator.	i. The daily average gas flow rate to the control device must not exceed the level established in the performance test.	See item 3.b.i. of this table.
		ii. The daily average voltage and secondary current (or total power input) must not fall below the level established in the performance test.	See item 3.b.ii. of this table.
		iii. The monthly rolling average equilibrium catalyst Ni concentration must not exceed the level established during the performance test.	See item 4.b.iii. of this table.
	c. Continuous parameter monitoring systems—wet scrubber.	i. The daily average pressure drop must not fall below the operating limit established in the performance test.	See item 3.c.i. of this table.
		ii. The daily average liquid-to-gas ratio must not fall below the operating limit established during the performance test. See item 3.c.ii. of this table.	
		iii. The monthly rolling average equilibrium catalyst Ni concentration must not exceed the level established during the performance test.	See item 4.c.iii. of this table.

[1] If applicable, you can use the alternative in § 63.1573 for gas flow rate instead of a continuous parameter monitoring system if you used the alternative method in the initial performance test. If so, you must continuously monitor and record the air flow rate to the regenerator and the temperature of the gases entering the control device as described in § 63.1573. You must determine and record the hourly average gas flow rate using Equation 1 of § 63.1573 and the daily average gas flow rate. You must maintain the daily average gas flow rate below the operating limit established during the performance test.

TABLE 8 TO SUBPART UUU OF PART 63.—ORGANIC HAP EMISSION LIMITS FOR CATALYTIC CRACKING UNITS

[As stated in § 63.1565(a)(1), you must meet each emission limitation in the following table that applies to you]

For each new and existing catalytic cracking unit * * *	You must meet the following emission limit for each catalyst regenerator vent * * *
1. Subject to the NSPS for carbon monoxide (CO) in 40 CFR 60.103.	CO emissions from the catalyst regenerator vent or CO boiler serving the catalytic cracking unit must not exceed 500 parts per million volume (ppmv) (dry basis).
2. Not subject to the NSPS for CO in 40 CFR 60.103 ...	a. CO emissions from the catalyst regenerator vent or CO boiler serving the catalytic cracking unit must not exceed 500 ppmv (dry basis). b. If you use a flare to meet the CO limit, the flare must meet the requirements for control devices in § 63.11(b): visible emissions must not exceed a total of 5 minutes during any 2 consecutive hours.

TABLE 9 TO SUBPART UUU OF PART 63.—OPERATING LIMITS FOR ORGANIC HAP EMISSIONS FROM CATALYTIC CRACKING UNITS

[As stated in § 63.1565(a)(2), you must meet each operating limit in the following table that applies to you]

For each new or existing catalytic cracking unit * * *	For this type of continuous monitoring system * * *	For this type of control device * * *	You must meet this operating limit * * *
1. Subject to the NSPS for carbon monoxide (CO) in 40 CFR 60.103.	Continuous emission monitoring system.	Not applicable	Not applicable.
2. Not subject to the NSPS for CO in 40 CFR 60.103.	a. Continuous emission monitoring system.	Not applicable	Not applicable.
	b. Continuous parameter monitoring systems.	i. Thermal incinerator	Maintain the daily average combustion zone temperature above the limit established during the performance test; and maintain the daily average oxygen concentration in the vent stream (percent, dry basis) above the limit established during the performance test.
		ii. Boiler or process heater with a design heat input capacity under 44 MW or a boiler or process heater in which all vent streams are not introduced into the flame zone.	Maintain the daily average combustion zone temperature above the limit established in the performance test.
		iii. Flare	The flare pilot light must be present at all times and the flare must be operating at all times that emissions may be vented to it.

TABLE 10 TO SUBPART UUU OF PART 63.—CONTINUOUS MONITORING SYSTEMS FOR ORGANIC HAP EMISSIONS FROM CATALYTIC CRACKING UNITS

[As stated in § 63.1565(b)(1), you must meet each requirement in the following table that applies to you]

For each new or existing catalytic cracking unit * * *	And you use this type of control device for your vent * * *	You must install, operate, and maintain this type of continuous monitoring system * * *
1. Subject to the NSPS for carbon monoxide (CO) in 40 CFR 60.103.	Not applicable	Continuous emission monitoring system to measure and record the concentration by volume (dry basis) of CO emissions from each catalyst regenerator vent.
2. Not subject to the NSPS for CO in 40 CFR 60.103.	a. Thermal incinerator	Continuous emission monitoring system to measure and record the concentration by volume (dry basis) of CO emissions from each catalyst regenerator vent; or continuous parameter monitoring systems to measure and record the combustion zone temperature and oxygen content (percent, dry basis) in the incinerator vent stream.
	b. Process heater or boiler with a design heat input capacity under 44 MW or process heater or boiler in which all vent streams are not introduced into the flame zone.	Continuous emission monitoring system to measure and record the concentration by volume (dry basis) of CO emissions from each catalyst regenerator vent; or continuous parameter monitoring systems to measure and record the combustion zone temperature.
	c. Flare	Monitoring device such as a thermocouple, an ultraviolet beam sensor, or infrared sensor to continuously detect the presence of a pilot flame.
	d. No control device	Continuous emission monitoring system to measure and record the concentration by volume (dry basis) of CO emissions from each catalyst regenerator vent.

TABLE 11 TO SUBPART UUU OF PART 63.—REQUIREMENTS FOR PERFORMANCE TESTS FOR ORGANIC HAP EMISSIONS FROM CATALYTIC CRACKING UNITS NOT SUBJECT TO NEW SOURCE PERFORMANCE STANDARD (NSPS) FOR CARBON MONOXIDE (CO)

[As stated in § 63.1565(b)(2) and (3), you must meet each requirement in the following table that applies to you]

For * * *	You must * * *	Using * * *	According to these requirements * * *
1. Each new or existing catalytic cracking unit catalyst regenerator vent.	a. Select sampling port's location and the number of traverse ports.	Method 1 or 1A in appendix A to part 60 of this chapter.	Sampling sites must be located at the outlet of the control device or the outlet of the regenerator, as applicable, and prior to any releases to the atmosphere.
	b. Determine velocity and volumetric flow rate.	Method 2, 2A, 2D, 2F, or 2G in appendix A to part 60 of this chapter, as applicable.	
	c. Conduct gas molecular weight analysis.	Method 3, 3A, or 3B in appendix A to part 60 of this chapter, as applicable.	
	d. Measure moisture content of the stack gas.	Method 4 in appendix A to part 60 of this chapter.	
2. For each new or existing catalytic cracking unit catalyst regenerator vent if you use a continuous emission monitoring system.	Measure CO emissions	Data from your continuous emission monitoring system.	Collect CO monitoring data for each vent for 24 consecutive operating hours; and reduce the continuous emission monitoring data to 1-hour averages computed from four or more data points equally spaced over each 1-hour period.
3. Each catalytic cracking unit catalyst regenerator vent if you use continuous parameter monitoring systems.	a. Measure the CO concentration (dry basis) of emissions exiting the control device.	Method 10, 10A, or 10B in appendix A to part 60 of this chapter, as applicable.	
	b. Establish each operating limit in Table 9 of this subpart that applies to you.	Data from the continuous parameter monitoring systems.	
	c. Thermal incinerator combustion zone temperature.	Data from the continuous parameter monitoring systems.	Collect temperature monitoring data every 15 minutes during the entire period of the CO initial performance test; and determine and record the minimum hourly average combustion zone temperature from all the readings.
	d. Thermal incinerator: oxygen, content (percent, dry basis) in the incinerator vent stream.	Data from the continuous parameter monitoring systems.	Collect oxygen concentration (percent, dry basis) monitoring data every 15 minutes during the entire period of the CO initial performance test; and determine and record the minimum hourly average percent excess oxygen concentration from all the readings.
	e. If you use a process heater or boiler with a design heat input capacity under 44 MW or process heater or boiler in which all vent streams are not introduced into the flame zone, establish operating limit for combustion zone temperature.	Data from the continuous parameter monitoring systems.	Collect the temperature monitoring data every 15 minutes during the entire period of the CO initial performance test; and determine and record the minimum hourly average combustion zone temperature from all the readings.
	f. If you use a flare, conduct visible emission observations.	Method 22 (40 CFR part 60, appendix A).	Maintain a 2-hour observation period; and record the presence of a flame at the pilot light over the full period of the test.

[As stated in § 63.1565(b)(2) and (3), you must meet each requirement in the following table that applies to you]

For * * *	You must * * *	Using * * *	According to these requirements * * *
	g. If you use a flare, determine that the flare meets the requirements for net heating value of the gas being combusted and exit velocity.	40 CFR 60.11(b)(6)through(8).	

TABLE 12 TO SUBPART UUU OF PART 63.—INITIAL COMPLIANCE WITH ORGANIC HAP EMISSION LIMITS FOR CATALYTIC CRACKING UNITS

[As stated in § 63.1565(b)(4), you must meet each requirement in the following table that applies to you]

For each new and existing catalytic cracking unit * * *	For the following emission limit * * *	You have demonstrated initial compliance if * * *
1. Subject to the NSPS for carbon monoxide (CO) in 40 CFR 60.103.	CO emissions from your catalyst regenerator vent or CO boiler serving the catalytic cracking unit must not exceed 500 ppmv (dry basis).	You have already conducted a performance test to demonstrate initial compliance with the NSPS and the measured CO emissions are less than or equal to 500 ppm (dry basis). As part of the Notification of Compliance Status, you must certify that your vent meets the CO limit. You are not required to conduct another performance test to demonstrate initial compliance. You have already conducted a performance evaluation to demonstrate initial compliance with the applicable performance specification. As part of your Notification of Compliance Status, you must certify that your continuous emission monitoring system meets the applicable requirements in § 63.1572. You are not required to conduct another performance evaluation to demonstrate initial compliance.
2. Not subject to the NSPS for CO in 40 CFR 60.103.	a. CO emissions from your catalyst regenerator vent or CO boiler serving the catalytic cracking unit must not exceed 500 ppmv (dry basis).	i. If you use a continuous parameter monitoring system, the average CO emissions measured by Method 10 over the period of the initial performance test are less than or equal to 500 ppmv (dry basis). ii. If you use a continuous emission monitoring system, the hourly average CO emissions over the 24-hour period for the initial performance test are not more than 500 ppmv (dry basis); and your performance evaluation shows your continuous emission monitoring system meets the applicable requirements in § 63.1572.
	b. If you use a flare, visible emissions must not exceed a total of 5 minutes during any 2 operating hours.	Visible emissions, measured by Method 22 during the 2-hour observation period during the initial performance test, are no higher than 5 minutes.

TABLE 13 TO SUBPART UUU OF PART 63—CONTINUOUS COMPLIANCE WITH ORGANIC HAP EMISSION LIMITS FOR CATALYTIC CRACKING UNITS

[As stated in § 63.1565(c)(1), you must meet each requirement in the following table that applies to you]

For each new and existing catalytic cracking unit * * ;*	Subject to this emission limit for your catalyst regenerator vent * * *	If you must * * *	You must demonstrate continuous compliance by * * *
1. Subject to the NSPS for carbon monoxide (CO) in 40 CFR 60.103.	CO emissions from your catalyst regenerator vent or CO boiler serving the catalytic cracking unit must not exceed 500 ppmv (dry basis).	Continuous emission monitoring system	Collecting the hourly average CO monitoring data according to § 63.1572; and maintaining the hourly average CO concentration at or below 500 ppmv (dry basis).
2. Not subject to the NSPS for CO in 40 CFR 60.103.	i. CO emissions from your catalyst regenerator vent or CO boiler serving the catalytic cracking unit must not exceed 500 ppmv (dry basis).	Continuous emission monitoring system.	Same as above.
	ii. CO emissisons from your catalyst regenerator vent or CO boiler serving the catalytic cracking unit must not exceed 500 ppmv (dry basis).	Continuous parameter monitoring system.	Maintaining the hourly average CO concentration below 500 ppmv (dry basis).
	iii. Visible emissions from a flare must not exceed a total of 5 minutes during any 2-hour period.	Control device-flare	Maintaining visible emissions below a total of 5 minutes during any 2-hour operating period.

TABLE 14 TO SUBPART UUU OF PART 63—CONTINUOUS COMPLIANCE WITH OPERATING LIMITS FOR ORGANIC HAP EMISSIONS FROM CATALYTIC CRACKING UNITS

[As stated in § 63.1565(c)(1), you must meet each requirement in the following table that applies to you]

For each new existing catalytic cracking unit * * *	If you use * * *	For this operating limit * * *	You must demonstrate continuous compliance by * * *
1. Subject to NSPS for carbon monoxide (CO) in 40 CFR 60.103.	Continuous emission monitoring system.	Not applicable	Complying with Table 13 of this subpart.
2. Not subject to the NSPS for CO in 40 CFR 60.103.	a. Continuous emission monitoring system ...	Not applicable	Complying with Table 13 of this subpart.
	b. Continuous parameter monitoring systems—thermal incinerator.	i. The daily average combustion zone temperature must not fall below the level established during the performance test.	Collecting the hourly and daily average temperature monitoring data according to § 63.1572; and maintaining the daily average combustion zone temperature above the limit established during the performance test.
		ii. The daily average oxygen concentration in the vent stream (percent, dry basis) must not fall below the level established during the performance test.	Collecting the hourly and daily average oxygen concentration monitoring data according to § 63.1572; and maintaining the daily average oxygen concentration above the limit established during the performance test.

	c. Continuous parameter monitoring systems—boiler or process heater with a design heat input capacity under 44 MW or boiler or process heater in which all vent streams are not introduced into the flame zone.	The daily combustion zone temperature must not fall below the level established in the performance test.	Collecting the average hourly and daily temperature monitoring data according to §63.1572; and maintaining the daily average combustion zone temperature above the limit established during the performance test.
	d. Continuous parameter monitoring system—flare.	The flare pilot light must be present at all times and the flare must be operating at all times that emissions may be vented to it.	Collecting the flare monitoring data according to §63.1572; and recording for each 1-hour period whether the monitor was continuously operating and the pilot light was continuously present during each 1-hour period.

TABLE 15 TO SUBPART UUU OF PART 63.—ORGANIC HAP EMISSION LIMITS FOR CATALYTIC REFORMING UNITS

[As stated in § 63.1566(a)(1), you must meet each emission limitation in the following table that applies to you]

For each new or existing catalytic reforming unit * * *	You must meet this emission limit for each process vent during depressuring and purging operation * * *
1. Option 1	Vent emissions to a flare that meets the requirements for control devices in § 63.11(b). Visible emissions from a flare must not exceed a total of 5 minutes during any 2-hour operating period.
2. Option 2	Using a control device, reduce uncontrolled emissions of total organic compounds (TOC) from your process vent by 98 percent by weight or to a concentration of 20 ppmv (dry basis), corrected to 3 percent oxygen, whichever is less stringent. If you vent emissions to a boiler or process heater to comply with the percent reduction or concentration emission limitation, the vent stream must be introduced into the flame zone, or any other location that will achieve the percent reduction or concentration standard.

TABLE 16 TO SUBPART UUU OF PART 63.—OPERATING LIMITS FOR ORGANIC HAP EMISSIONS FROM CATALYTIC REFORMING UNITS

[As stated in § 63.1566(a)(2), you must meet each operating limit in the following table that applies to you]

For each new or existing catalytic reforming unit * * *	For this type of control device * * *	You must meet this operating limit during depressuring and purging operations * * *
1. Option 1: vent to flare	Flare that meets the requirements for control devices in § 63.11(b).	The flare pilot light must be present at all times and the flare must be operating at all times that emissions may be vented to it.
2. Option 2: percent reduction or concentration limit.	Thermal incinerator, boiler or process heater with a design heat input capacity under 44 MW, or boiler or process heater in which all vent streams are not introduced into the flame zone.	The daily average combustion zone temperature must not fall below the limit established during the performance test.

TABLE 17 TO SUBPART UUU OF PART 63.—CONTINUOUS MONITORING SYSTEMS FOR ORGANIC HAP EMISSIONS FROM CATALYTIC REFORMING UNITS

[As stated in § 63.1566(b)(1), you must meet each requirement in the following table that applies to you]

For each new or exiting catalytic reforming unit * * *	If you use this type of control device * * *	You must install and operate this type of continuous monitoring system * * *
1. Option 1: vent to a flare	Flare that meets the requirements for control devices in § 63.11(b).	Monitoring device such as a thermocouple, an ultraviolet beam sensor, or infrared sensor to continuously detect the presence of a pilot flame.
2. Option 2: percent reduction or concentration limit.	Thermal incinerator, process heater or boiler with a design heat input capacity under 44 MW, or process heater or boiler in which all vent streams are not introduced into the flame zone.	Continuous parameter monitoring systems to measure and record the combustion zone temperature.

TABLE 18 TO SUBPART UUU OF PART 63.—REQUIREMENTS FOR PERFORMANCE TESTS FOR ORGANIC HAP EMISSIONS FROM CATALYTIC REFORMING UNITS

[As stated in § 63.1566(b)(2) and (3), you must meet each requirement in the following table that applies to you]

For each new or exiting catalytic reforming unit * * *	You must * * *	Using * * *	According to these requirements * * *
1. Option 1: vent to a flare.	a. Conduct visible emission observations.	Method 22 (40 CFR 60, appendix A)	2-hour observation period. Record the presence of a flame at the pilot light over the full period of the test.
	b. Determine that the flare meets the requirements for net heating value of the gas being combusted and exit velocity.	Not applicable	40 CFR 60.11(b)(6) through (8).
2. Option 2: percent reduction or concentration limit.	a. Select sampling site	Method 1 or 1A (40 CFR part 60, appendix A). No traverse site selection method is needed for vents smaller than 0.10 meter in diameter.	Sampling sites must be located at the inlet (if you elect the emission reduction standard) and outlet of the control device and prior to any releases to the atmosphere.
	b. Measure gas volumetric flow rate.	Method 2, 2A, 2C, 2D, 2F, or 2G (40 CFR part 60, appendix A), as applicable.	
	c. Measure TOC concentration (for percent reduction standard).	Method 25 (40 CFR part 60, appendix A) to measure TOC concentration at the inlet and outlet of the control device. If the TOC outlet concentration is expected to be less than 50 ppm, you can use Method 25A to measure TOC concentration at the inlet and the outlet of the control device.	Take either an integrated sample or four grab samples during each run. If you use a grab sampling technique, take the samples at approximately equal intervals in time, such as 15-minute intervals during the run.
	d. Calculate TOC emission rate and mass emission reduction.	Calculate emission rate by Equation 1 of § 63.1566 (if you use Method 25) or Equation 2 of § 63.1566 (if you use Method 25A). Calculate mass emission reduction by Equation 3 of § 63.1566.	
	e. Measure TOC concentration (for concentration standard).	Method 25A (40 CFR part 60, appendix A) to measure TOC concentration at the outlet of the control device.	
	f. Determine oxygen content in the gas stream at the outlet of the control device.	Method 3A or 3B (40 CFR part 60, appendix A), as applicable.	
	g. Correct the measured TOC concentration for oxygen content.	Equation 4 of § 63.1566	
	h. Established each operating limit in Table 16 of this subpart that applies to you for a thermal incinerator, or process heater or boiler with a design heat input capacity under 44 MW, or process heater or boiler in which all vent streams are not introduced into the flame zone.	Data from the continuous parameter monitoring systems.	Collect the temperature monitoring data every 15 minutes during the entire period of the initial TOC performance test. Determine and record the minimum hourly average combustion zone temperature.

TABLE 19 TO SUBPART UUU OF PART 63—INITIAL COMPLIANCE WITH ORGANIC HAP EMISSION LIMITS FOR CATALYTIC REFORMING UNITS

[As stated in § 63.1566(b)(7), you must meet each requirement in the following table that applies to you.]

For . . .	For the following emission limit . . .	You have demonstrated initial compliance if . . .
1. Each new and existing catalytic reforming unit.	a. Visible emissions from a flare must not exceed a total of 5 minutes during any 2 consecutive hours.	Visible emissions, measured using Method 22 over the 2-hour observation period of the performance test do not exceed a total of 5 minutes.
	b. Reduce uncontrolled emissions of TOC from your process vent using a control device, by 98 percent by weight or to a concentration of 20 ppmv, on a dry basis, corrected to 3 percent oxygen, whichever is less stringent.	The mass emission reduction measured using Method 25 over the period of the performance test, is at least 98 percent by weight. The mass emission reduction is calculated using Equations 1 (or 2) and 3 of § 63.1566 or the TOC concentration, measured by Method 25A over the period of the performance test, does not exceed 20 ppmv (dry basis), corrected to 3 percent oxygen using Equation 4 of § 63.1566.

TABLE 20 TO SUBPART UUU OF PART 63.—CONTINUOUS COMPLIANCE WITH ORGANIC HAP EMISSION LIMITS FOR CATALYTIC REFORMING UNITS

[As stated in § 63.1566(c)(1), you must meet each requirement in the following table that applies to you]

For * * *	For this emission limit * * *	You must demonstrate continuous compliance during depressuring and purging by * * *
1. Option 1: Each new or existing catalytic reforming unit.	Vent emissions from your process vent to a flare that meets the requirements in § 63.11(b).	Maintaining visible emissions from a flare below a total of 5 minutes during any 2 consecutive hours.
2. Option 2: Each new or existing catalytic reforming unit.	Using a control device, reduce uncontrolled emissions of TOC from your process vent by 98 percent by weight or to a concentration of 20 ppmv, (dry basis), corrected to 3 percent oxygen, whichever is less stringent.	Maintaining a 98 percent by weight TOC emission reduction; or maintaining a TOC concentration of not more than 20 ppmv (dry basis), corrected to 3 percent oxygen, whichever is less stringent.

TABLE 21 TO SUBPART UUU OF PART 63.—CONTINUOUS COMPLIANCE WITH OPERATING LIMITS FOR ORGANIC HAP EMISSIONS FROM CATALYTIC REFORMING UNITS

[As stated in § 63.1566(c)(1), you must meet each requirement in the following table that applies to you]

For * * *	If you use * * *	For this operating limit * * *	You must demonstrate continuous compliance during depressuring and purging by * * *
1. Each new or existing catalytic reforming unit.	a. Flare that meets the requirements in § 63.11(b).	The flare pilot light must be present at all times and the flare must be operating at all times that emissions may be vented to it.	Collecting flare monitoring data according to § 63.1572; and recording for each 1-hour period whether the monitor was continuously operating and the pilot light was continuously present during each 1-hour period.
	b. Thermal incinerator, boiler or process heater with a design input capacity under 44 MW or boiler or process heater in which all vent streams are not introduced into the flame zone.	Maintain the daily average combustion zone temperature above the limit established during the performance test.	Collecting the hourly and daily temperature monitoring data according to § 63.1572; and maintaining the daily average combustion zone temperature above the limit established during the performance test.

TABLE 22 TO SUBPART UUU OF PART 63—INORGANIC HAP EMISSION LIMITS FOR CATALYTIC REFORMING UNITS

[As stated in § 63.1567(a)(1), you must meet each emission limitation in the following table that applies to you]

For * * *	You must meet this emission limit for your process vent during coke burn-off and catalyst rejuvenation * * *
1. Each existing semi-regenerative catalytic reforming unit.	Reduce uncontrolled emissions of hydrogen chloride (HC1) by 92 percent by weight using a control device or to a concentration of 30 ppmv (dry basis), corrected to 3 percent oxygen.
2. Each existing cyclic or continuous catalytic reforming unit.	Reduce uncontrolled emissions of HC1 by 97 percent by weight using a control device or to a concentration of 10 ppmv (dry basis), corrected to 3 percent oxygen.
3. Each new semi-regenerative, cyclic, or continuous catalytic reforming unit.	Reduce uncontrolled emissions of HC1 by 97 percent by weight using a control device or to a concentration of 10 ppmv (dry basis), corrected to 3 percent oxygen.

TABLE 23 TO SUBPART UUU OF PART 63.—OPERATING LIMITS FOR INORGANIC HAP EMISSION LIMITATIONS FOR CATALYTIC REFORMING UNITS

[As stated in § 63.1567(a)(2), you must meet each operating limit in the following table that applies to you]

For * * *	If you use this type of control device * * *	You must meet this operating limit during coke burn-off and catalytst rejuvenation . . .
1. Each new or existing catalytic reforming unit.	a. Wet scrubber	The daily average pH of the water (or scrubbing liquid) exiting the scrubber must not fall below the limit established during the performance test; and the daily average liquid-to-gas ratio must not fall below the limit established during the performance test.
	b. Internal scrubbing system (i.e., no add-on control device).	The HCl concentration in the catalyst regenerator exhaust gas must not exceed the limit established during the performance test.

TABLE 24 TO SUBPART UUU OF PART 63.—CONTINUOUS MONITORING SYSTEMS FOR INORGANIC HAP EMISSIONS FROM CATALYTIC REFORMING UNITS

[As stated in § 63.1567(b)(1), you must meet each requirement in the following table that applies to you]

If you use this type of control device for your vent * * *	You must install and operate this type of continuous monitoring system * * *
1. Wet scrubber	Continuous parameter monitoring system to measure and record the pH of the water (or scrubbing liquid) exiting the scrubber during coke burn-off and catalyst rejuvenation. If applicable, you can use the alternative in § 63.1573 instead of a continuous parameter monitoring system for pH of the water (or scrubbing liquid); and continuous parameter monitoring systems to measure and record the gas flow rate to the scrubber and the total water (or scrubbing liquid) flow rate to the scrubber during coke burn-off and catalyst rejuvenation.
2. Internal scrubbing system (i.e., no add-on control device).	Colormetric tube sampling system to measure the HCl concentration in the catalyst regenerator exhaust gas during coke burn-off and catalyst rejuvenation.

TABLE 25 TO SUBPART UUU OF PART 63.—REQUIREMENTS FOR PERFORMANCE TESTS FOR INORGANIC HAP EMISSIONS FROM CATALYTIC REFORMING UNITS

[As stated in § 63.1567(b)(2) and (3), you must meet each requirement in the following table that applies to you]

If you use this type of control device or system * * *	You must * * *	Using * * *	According to these requirements * * *
1. Wet scrubber	a. Measure the HCl concentration at the outlet of the control device (for the concentration standard) or at the inlet and outlet of the control d4evice (for the percent reduction standard).	i. Method 26A (40 CFR part 60, appendix A).	(1) Sampling rate must be at least 0.014 dscm/min (0.5 dscf/min). You must do the test during the coke burn-off and catalyst rejuvenation cycle, but don't make any test runs during the first hour or the last 6 hours of the cycle. (2) Record the total amount (rate) of scrubbing liquid or solution and the amount (rate) of make-up liquid to the scrubber during each test run.
	b. Establish operating limit for pH level.		(1) Measure and record the pH of the water (or scrubbing liquid) exiting the scrubber every 15 minutes during the entire period of the performance test. Determine and record the hourly average pH level from the recorded values. (2) If you use the alternative method in § 63.1573, measure and record the pH of the water (or scrubbing liquid) exiting the scrubber during coke burn-off and catalyst rejuvenation using pH strips at least three times during each run. Determine and record the average pH level.
	c. Establish operating limit for liquid-to-gas ratio.	Data from the continuous parameter monitoring systems.	Measure and record the gas flow rate to the scrubber and the total water (or scrubbing liquid) flow rate to the scrubber every 15 minutes during the entire period of the performance test. Determine and record the hourly average gas flow rate and total water (or scrubbing liquid) flow rate. Determine and record the minimum liquid-to-gas ratio.
2. Internal scrubbing system (i.e., no add-on control device).	a. Measure the concentration of HCl in the catalyst regenerator exhaust gas.	Method 26 (40 CFR part 60, appendix A).	Sampling rate must be at least 0.014 dscm/min (0.5 dscf/min). You must do the test during the coke burn-off and catalyst rejuvenation cycle, but don't make any test runs during the first hour or the last 6 hours of the cycle.

[As stated in § 63.1567(b)(2) and (3), you must meet each requirement in the following table that applies to you]

If you use this type of control device or system * * *	You must * * *	Using * * *	According to these requirements * * *
	b. Establish operating limit for HCl concentration.	Measure and record the HCl concentration in the catalyst regenerator exhaust gas using the colorimetric tube sampling system at least three times during each test run. Determine and record the average HCl concentration.	

TABLE 26 TO SUBPART UUU OF PART 63.—INITIAL COMPLIANCE WITH INORGANIC HAP EMISSION LIMITS FOR CATALYTIC REFORMING UNITS

[As stated in § 63.1567(b)(4), you must meet each requirement in the following table that applies to you]

For* * *	For the following emission limit * * *	You have demonstrated initial compliance if * * *
1. Each existing semi-regenerative catalytic reforming unit.	Reduce uncontrolled emissions of HCl by 92 percent by weight using a control device or to a concentration of 30 ppmv, (dry basis), corrected to 3 percent oxygen.	Average emissions of HCl measured using Method 26 or 26A, as applicable over the period of the performance test, are reduced by 92 percent or to a concentration less than or equal to 30 ppmv (dry basis) corrected to 3 percent oxygen.
2. Each existing cyclic or continuous catalytic reforming unit and each new semi-regenerative, cyclic, or continuous catalytic reforming unit.	Reduce uncontrolled emissions of HCl by 97 percent by weight using a control device, or to a concentration of 10 ppmv (dry basis), corrected to 3 percent oxygen.	Average emissions of HCl measured using Method 26 or 26A, as applicable over the period of the performance test, are reduced by 97 percent or to a concentration less than or equal to 10 ppmv (dry basis) corrected to 3 percent oxygen.

TABLE 27 TO SUBPART UUU OF PART 63.—CONTINUOUS COMPLIANCE WITH INORGANIC HAP EMISSION LIMITS FOR CATALYTIC REFORMING UNITS

[As stated in § 63.1567(c)(1), you must meet each requirement in the following table that applies to you]

For * * *	For this emission limit * * *	You must demonstrate continuous compliance during coke burn-off and catalyst rejuvenation by * * *
1. Each existing semi-regenerative catalytic reforming unit.	Reduce uncontrolled emissions of HCl by 92 percent by weight using a control device or to a concentration of 30 ppmv (dry basis), corrected to 3 percent oxygen.	Maintaining a 92 percent HCl emission reduction or an HCl concentration no more than 30 ppmv (dry basis), corrected to 3 percent oxygen.
2. Each existing cyclic or continuous catalytic reforming unit.	Reduce uncontrolled emissions of HCl by 97 percent by weight using a control device, or to a concentration of 10 ppmv (dry basis), corrected to 3 percent oxygen.	Maintaining a 97 percent HCl control efficiency or an HCl concentration no more than 10 ppmv (dry basis), corrected to 3 percent oxygen.
3. Each new semi-regenerative, cyclic, or continuous catalytic reforming unit.	Reduce uncontrolled emissions of HCl by 97 percent by weight using a control device, or to a concentration of 10 ppmv (dry basis), corrected to 3 percent oxygen.	Maintaining a 97 percent HCl control efficiency or an HCl concentration no more than 10 ppmv (dry basis), corrected to 3 percent oxygen.

TABLE 28 TO SUBPART UUU OF PART 63.—CONTINUOUS COMPLIANCE WITH OPERATING LIMITS FOR INORGANIC HAP EMISSIONS FROM CATALYTIC REFORMING UNITS

[As stated in § 63.1567(c)(1), you must meet each requirement in the following table that applies to you]

For * * *	For this operating limit * * *	If you use this type of control device * * *	You must demonstrate continuous compliance during coke burn-off and catalyst rejuvenation by * * *
1. Each new or existing catalytic reforming unit.	a. The daily average pH of the water (or scrubbing and liquid) exiting the scrubber must not fall below the level established during the performance test.	i. Wet scrubber	(1) Collecting the hourly and daily average pH monitoring data according to § 63.1572; and maintaining the daily average the pH above the operating limit established during the performance test. (2) If you use the alternative in § 63.1573, measuring and recording the pH of the water (or scrubbing liquid) exiting the scrubber every hour according to § 63.1572; determining and recording the daily average pH; and maintaining the daily average pH above the operating limit established during the performance test.
	b. The daily average liquid-to-gas ratio must not fall below the level established during the performance test.	Wet scrubber	Collecting the hourly average gas flow rate and total water (or scrubbing liquid) flow rate monitoring data; determining and recording the hourly average liquid-to-gas ratio; determining and recording the daily average liquid-to-gas ratio; and maintaining the daily average liquid-to-gas ratio above the limit established during the performance test.
	c. The HCl concentration in the catalyst regenerator exhaust gas must not exceed the applicable operating limit established during the performance test.	Internal scrubbing system (e.g., no add-on control device).	Measuring and recording the concentration of HCl every 4 hours using a colormetric tube sampling system; and maintaining the HCl concentration below the applicable operating limit.

TABLE 29 TO SUBPART UUU OF PART 63.—HAP EMISSION LIMITS FOR SULFUR RECOVERY UNITS

[As stated in § 63.1568(a)(1), you must meet each emission limitation in the following table that applies to you]

For * * *	You must meet this emission limit for each process vent * * *
1. Each new or existing Claus sulfur recovery unit part of a sulfur recovery plant of 20 long tons per day or more and subject to the NSPS for sulfur oxides in 40 CFR 60.104(a)(2).	a. 250 ppmv (dry basis) of sulfur dioxide (SO_2) at zero percent excess air if you use an oxidation or reduction control system followed by incineration. b. 300 ppmv of reduced sulfur compounds calculated as ppmv SO_2 (dry basis) at zero percent excess air if you use a reduction control system without incineration.
2. Each new or existing sulfur recovery unit (Claus or other type, regardless of size) not subject to the NSPS for sulfur oxides in 40 CFR 60.104(a)(2): Option 1 (Elect NSPS).	a. 250 ppmv (dry basis) of SO_2 at zero percent excess air if you use an oxidation or reduction control system followed by incineration. b. 300 ppmv of reduced sulfur compounds calculated as ppmv SO_2 (dry basis) at zero percent excess air if you use a reduction control system without incineration.
3. Each new or existing sulfur recovery unit (Claus or other type, regardless of size) not subject to the NSPS for sulfur oxides in paragraph (a)(2) of 40 CFR 60.104: Option 2 (TRS limit).	300 ppmv of total reduced sulfur (TRS) compounds, expressed as an equivalent SO_2 concentration (dry basis) at zero percent oxygen.

TABLE 30 TO SUBPART UUU OF PART 63.—OPERATING LIMITS FOR HAP EMISSIONS FROM SULFUR RECOVERY UNITS

[As stated in § 63.1568(a)(2), you must meet each operating limit in the following table that applies to you]

For * * *	If use this type of control device	You must meet this operating limit* * *
1. Each new or existing Claus sulfur recovery unit part of a sulfur recovery plant of 20 long tons per day or more and subject to the NSPS for sulfur oxides in 40 CFR 60.104(a)(2).	Not applicable	Not applicable.
2. Each new or existing sulfur recovery unit (Claus or other type, regardless of size) not subject to the NSPS for sulfur oxides in 40 CFR 60.104(a)(2): Option 1 (Elect NSPS).	Not applicable	Not applicable.
3. Each new or existing sulfur recovery unit (Claus or other type, regardless of size) not subject to the NSPS for sulfur oxides in 40 CFR 60.104(a)(2): Option 2 (TRS limit).	Thermal incinerator	Maintain the daily average combustion zone temperature above the limit established during the performance test; and maintain the daily average oxygen concentration in the vent stream (percent, dry basis) above the limit established during the performance test.

TABLE 31 TO SUBPART UUU OF PART 63.—CONTINUOUS MONITORING SYSTEMS FOR HAP EMISSIONS FROM SULFUR RECOVERY UNITS

[As stated in § 63.1568(b)(1), you must meet each requirement in the following table that applies to you]

For * * *	For this limit * * *	You must install and operate this continuous monitoring system * * *
1. Each new or existing Claus sulfur recovery unit part to a sulfur recovery plant of 20 long tons per day and subject to the NSPS for sulfur oxides in 40 CFR 60.104 (1) (2).	a. 250 ppmv (dry basis) of SO_2 at zero percent excess air if you use an oxidation or reduction control system followed by incineration.	Continuous emission monitoring system to measure and record the hourly average concentration of SO_2 (dry basis) at zero percent excess air for each exhaust stack. This system must include an oxygen monitor for correcting the data for excess air.

[As stated in § 63.1568(b)(1), you must meet each requirement in the following table that applies to you]

For * * *	For this limit * * *	You must install and operate this continuous monitoring system * * *
	b. 300 ppmv of reduced sulfur compounds calculated as ppmv SO_2 (dry basis) at zero percent excess air if you use a reduction control system without incineration.	Continuous emission monitoring system to measure and record the hourly average concentration of reduced sulfur and oxygen (O_2) emissions. Calculate the reduced sulfur emissions as SO_2 (dry basis) at zero percent excess air. *Exception:* You can use an instrument having an air or SO_2 dilution and oxidation system to convert the reduced sulfur to SO_2 for continuously monitoring and recording the concentration (dry basis) at zero percent excess air of the resultant SO_2 instead of the reduced sulfur monitor. The monitor must include an oxygen monitor for correcting the data for excess oxygen.
2. Option 1: Elect NSPS. Each new or existing sulfur recovery unit (Claus or other type, regardless of size) not subject to the NSPS for sulfur oxides in paragraph (a) (2) of 40 CFR 60.104.	a. 250 ppmv (dry basis) of SO_2 at zero percent excess air if you use an oxidation or reduction control system followed by incineration.	Continuous emission monitoring system to measure and record the hourly average concentration of SO_2 (dry basis), at zero percent excess air for each exhaust stack. This system must include an oxygen monitor for correcting the data for excess air.
	b. 300 ppmv of reduced sulfur compounds calculated as ppmv SO_2 (dry basis) at zero percent excess air if you use a reduction control system without incineration.	Continuous emission monitoring system to measure and record the hourly average concentration of reduced sulfur and O_2 emissions for each exhaust stack. Calculate the reduced sulfur emissions as SO_2 (dry basis), at zero percent excess air. *Exception:* You can use an instrument having an air or O_2 dilution and oxidation system to convert the reduced sulfur to SO_2 for continuously monitoring and recording the concentration (dry basis) at zero percent excess air of the resultant SO_2 instead of the reduced sulfur monitor. The monitor must include an oxygen monitor for correcting the data for excess oxygen.
3. Option 2: TRS limit Each new or existing sulfur recovery unit (Claus or Other type, regardless or size) not subject to the NSPS for sulfur oxides in 40 CFR 60.104 (a) (2).	300 ppmv of total reduced sulfur (TRS) compounds, expressed as an equivalent SO_2 concentration (dry basis) at zero percent oxygen.	Continuous emission monitoring system to measure and record the hourly average concentration of TRS for each exhaust stack. This monitor must include an oxygen monitor for correcting the data for excess oxygen; or continuous parameter monitoring systems to measure and record the combustion zone temperature of each thermal incinerator and the oxygen content (percent, dry basis) in the vent stream of the incinerator.

TABLE 32 TO SUBPART UUU OF PART 63.—REQUIREMENTS FOR PERFORMANCE TESTS FOR HAP EMISSIONS FROM SULFUR RECOVERY UNITS NOT SUBJECT TO THE NEW SOURCE PERFORMANCE STANDARDS FOR SULFUR OXIDES

[As stated in § 63.1568(b)(2) and (3), you must meet each requirement in the following table that applies to you]

For * * *	You must * * *	Using * * *	According to these requirements * * *
1. Each new and existing sulfur recovery unit: Option 1 (Elect NSPS).	Measure SO_2 concentration (for an oxidation or reduction system followed by incineration) or the concentration of reduced sulfur (or SO_2 if you use an instrument to convert the reduced sulfur to SO_2) for a reduction control system without incineration.	Data from continuous emission monitoring system.	Collect SO_2 monitoring data every 15 minutes for 24 consecutive operating hours. Reduce the data to 1-hour averages computed from four or more data points equally spaced over each 1-hour period.
2. Each new and existing sulfur recovery unit: Option 2 (TRS limit).	a. Select sampling port's location and the number of traverse ports.	Method 1 or 1A appendix A to part 60 of this chapter.	Sampling sites must be located at the outlet of the control device and prior to any releases to the atmosphere.
	b. Determine velocity and volumetric flow rate.	Method 2, 2A, 2C, 2D, 2F, or 2G in appendix A to part 60 of this chapter, as applicable.	
	c. Conduct gas molecular weight analysis; obtain the oxygen concentration needed to correct the emission rate for excess air.	Method 3, 3A, or 3B in appendix A to part 60 of this chapter, as applicable.	Take the samples simultaneously with reduced sulfur or moisture samples.
	d. Measure moisture content of the stack gas.	Method 4 in appendix A to part 60 of this chapter.	Make your sampling time for each Method 4 sample equal to that for 4 Method 15 samples.
	e. Measure the concentration of TRS.	Method 15 or 15A in appendix A to part 60 of this chapter, as applicable.	If the cross-sectional area of the duct is less than 5 square meters (m^2) or 54 square feet, you must use the centroid of the cross section as the sampling point. If the cross-sectional area is 5 m^2 or more and the centroid is more than 1 meter (m) from the wall, your sampling point may be at a point no closer to the walls than 1 m or 39 inches. Your sampling rate must be at least 3 liters per minute or 0.10 cubic feet per minute to ensure minimum residence time for the sample inside the sample lines.
	f. Calculate the SO_2 equivalent for each run after correcting for moisture and oxygen.	The arithmetic average of the SO_2 equivalent for each sample during the run.	
	g. Correct the reduced sulfur samples to zero percent excess air.sa	Equation 1 of § 63.1568.	
	h. Establish each operating limit in Table 30 of this subpart that applies to you.	Data from the continuous parameter monitoring system.	
	i. Measure thermal incinerator: combustion zone temperature.	Data from the continuous parameter monitoring system.	Collect temperature monitoring data every 15 minutes during the entire period of the performance test; and determine and record the minimum hourly average temperature from all the readings.

[As stated in § 63.1568(b)(2) and (3), you must meet each requirement in the following table that applies to you]

For * * *	You must * * *	Using * * *	According to these requirements * * *
	j. Measure thermal incinerator: oxygen concentration (percent, dry basis) in the vent stream.	Data from the continuous parameter monitoring system.	Collect oxygen concentration (percent, dry basis) data every 15 minutes during the entire period of the performance test; and determine and record the minimum hourly average percent excess oxygen concentration.
	k. If you use a continuous emission monitoring system, measure TRS concentration.	Data from continuous emission monitoring system.	Collect TRS data every 15 minutes for 24 consecutive operating hours. Reduce the data to 1-hour averages computed from four or more data points equally spaced over each 1-hour period.

TABLE 33 TO SUBPART UUU OF PART 63.—INITIAL COMPLIANCE WITH HAP EMISSION LIMITS FOR SULFUR RECOVERY UNITS

[As stated in § 63.1568(b)(5), you must meet each requirement in the following table that applies to you]

For * * *	For the following emission limit * * *	You have demonstrated initial compliance if * * *
1. Each new or existing Clause sulfur recovery unit part of a sulfur recovery plant of 20 long tons per day and subject to the NSPS for sulfur oxides in 40 CFR 60.104(a)(2).	a. 250 ppmv (dry basis) SO_2 at zero percent excess air if you use an oxidation or reduction control system followed by incineration.	You have already conducted a performance test to demonstrate initial compliance with the NSPS and the hourly average SO_2 emissions measured by the continuous emission monitoring system are less than or equal to 250 ppmv (dry basis) at zero percent excess air. As part of the Notification of Compliance Status, you must certify that your vent meets the SO_2 limit. You are not required to do another performance test to demonstrate initial compliance. You have already conducted a performance evaluation to demonstrate initial compliance with the applicable performance specification. As part of your Notification of Compliance Status, you must certify that your continuous emission monitoring system meets the applicable requirements in § 63.1572. You are not required to do another performance evaluation to demonstrate initial compliance.
	b. 300 ppmv of reduced sulfur compounds calculated as ppmv SO_2 (dry basis) at zero percent excess air if you use a reduction control system without incineration.	You have already conducted a performance test to demonstrate initial compliance with the NSPS and the hourly average SO_2 emissions measured by your continuous emission monitoring system are less than or equal to 250 ppmv (dry basis) at zero percent excess air. As part of the Notification of Compliance Status, you must certify that your vent meets the SO_2 limit. You are not required to do another performance test do demonstrate initial compliance.
		You have already conducted a performance evaluation to demonstrate initial compliance with the applicable performance specification. As part of your Notification of Compliance Status, you must certify that your continuous emission monitoring system meets the applicable requirements in § 63.1572. You are not required to do another performance evaluation to demonstrate initial compliance.
2. Option 1: Elect NSPS. Each new or existing sulfur recovery unit (Claus or other type, regardless of size) not subject to the NSPS for sulfur oxides in 40 CFR 60.104(a)(2).	a. 250 ppmv (dry basis) of SO_2 at zero percent excess air if you use an oxidation control system followed by incineration.	The hourly average SO_2 emissions measured by the continuous emission monitoring system over the 24-hour period of the initial performance test are not more than 250 ppvm (dry basis) at zero percent excess air; and your performance evaluation shows the monitoring system meets the applicable requirements in § 63.1572.
	b. 300 ppmv of reduced sulfur compounds calculated as ppmv SO_2 (dry basis) at zero percent excess air if you use a reduction control system without incineration.	The hourly average reduced sulfur emissions measured by the continuous emission monitoring system over the 24-hour period of the performance test no more than 300 ppmv, calculated as ppmv SO_2 (dry basis) at zero percent excess air; and your performance evaluation shows the continuous emission monitoring system meets the applicable requirements in § 63.1572.

[As stated in § 63.1568(b)(5), you must meet each requirement in the following table that applies to you]

For * * *	For the following emission limit * * *	You have demonstrated initial compliance if * * *
3. Option 2: TRS limit. Each new or existing sulfur recovery unit (Claus or other type, regardless of size) not subject to the NSPS for sulfur oxides in 40 CFR 60.104(a)(2).	300 ppmv of TRS compounds expressed as an equivalent SO_2 concentration (dry basis) at zero percent oxygen.	If you do not use a continuous emission monitoring system, the average TRS emissions measured using Method 15 over the period of the initial performance test are less than or equal to 300 ppmv expressed as equivalent SO_2 concentration (dry basis) at zero percent oxygen. If you use a continuous emission monitoring system the hourly average TRS emissions measured by the continuous emission monitoring system over the 24-hour period of the performance test are no more than 300 ppmv expressed as an equivalent SO_2 concentration (dry basis) at zero percent oxygen; and your performance evaluation shows the continuous emission monitoring system meets the applicable requirements in § 63.1572.

TABLE 34 TO SUBPART UUU OF PART 63.—CONTINUOUS COMPLIANCE WITH HAP EMISSION LIMITS FOR SULFUR RECOVERY UNITS

[As stated in § 63.1568(c)(1), you must meet each requirement in the following table that applies to you.]

For * * *	For this emission limit * * *	You must demonstrate continuous compliance by * * *
1. Each new or existing Claus sulfur recovery unit part of a sulfur recovery plant of 20 long tons per or more and subject to the NSPS for sulfur oxides in 40 CFR 60.104(a)(2).	a. 250 ppmv (dry basis) SO_2 at zero percent excess air if you use an oxidation or reduction control system followed by incineration.	Collecting the hourly average SO_2 monitoring data (dry basis, percent excess air) according to § 63.1572; maintaining the hourly average SO_2 concentration at or below the applicable limit; determining and recording each 12-hour average SO_2 day concentration; and reporting any 12-hour average SO_2 concentration greater than the applicable emission limitation in the compliance report required in § 63.1575.
	b. 300 ppmv of reduced sulfur compounds calculated as ppmv (dry basis) SO_2 at zero percent excess air if you use a reduction control system without incineration.	Collecting the hourly average reduced sulfur and O_2 data according to § 63.1572; and maintaining the hourly average concentration of reduced sulfur at or below the applicable limit; and determining and recording each 12-hour average concentration of reduced sulfur; and reporting any 12-hour average concentration of reduced sulfur greater than the applicable emission limitation in the compliance report required in § 63.1575.
2. Option 1: Elect NSPS Each new or existing sulfur recovery unit (Claus or other type, regardless of size) not subject to the NSPS for sulfur oxides in 40 CFR 60.104(a)(2).	a. 250 ppmv (dry basis) of SO_2 at zero percent excess air (for oxidation or reduction system followed by incineration).	Collecting the hourly average SO_2 monitoring data (dry basis, percent excess air) according to § 63.1572; maintaining the hourly average SO_2 concentration at or below the applicable limit; determining and recording each 12-hour average SO_2 concentration; and reporting any 12-hour average SO_2 concentration greater than the applicable emission limitation in the compliance report required in § 63.1575.

[As stated in § 63.1568(c)(1), you must meet each requirement in the following table that applies to you.]

For * * *	For this emission limit * * *	You must demonstrate continuous compliance by * * *
	b. 300 ppmv of reduced sulfur compounds calculated as ppmv SO_2 (dry basis) at zero percent excess air (for reduction control system without incineration).	Collecting the hourly average reduced sulfur (and air or O_2 dilution and oxidation data) according to § 63.1572; maintaining the hourly average SO_2 concentration at or below the applicable limit; reducing the monitoring data to 12-hour averages; and reporting any 12-hour average SO_2 concentration greater than the applicable limit in the compliance report required by § 63.1575.
3. Option 2: TRS limit Each new or existing sulfur recovery unit (Claus or other type, regardless of size) not subject to the NSPS for sulfur oxides in 40 CFR 60.104(a)(2).	300 ppmv of TRS compounds, expressed as an SO_2 concentration (dry basis) at zero percent oxygen or reduced sulfur compounds calculated as ppmv SO_2 (dry basis) at zero percent excess air.	Collecting the hourly average TRS monitoring data according to § 63.1572, if you use a continuous emission monitoring system; maintaining the hourly average concentration of TRS at or below the applicable limit; reducing the TRS monitoring data to 12-hour averages; reporting any 12-hour average TRS greater than the applicable limit in the compliance report required by § 63.1575; and maintaining the hourly average concentration of TRS below the applicable limit if you use continuous parameter monitoring systems.

Table 35 to Subpart UUU of Part 63.—Continuous Compliance With Operating Limits for HAP Emissions From Sulfur Recovery Units

[As stated in § 63.1568(c)(1), you must meet each requirement in the following table that applies to you]

For * * *	For this operating limit * * *	You must demonstrate continuous compliance by * * *
1. Each new or existing Claus sulfur recovery unit part of a sulfur recovery plant of 20 long tons per day or more and subject to the NSPS for sulfur oxides in paragraph 40 CFR 60.104(a)(2).	Not applicable	Meeting the requirements of Table 34 of this subpart.
2. Option 1: Elect NSPS Each new or existing sulfur recovery unit (Claus or other type, regardless of size) not subject to the NSPS for sulfur oxides in 40 CFR 60.104(a)(2).	Not applicable	Meeting the requirements of Table 34 of this subpart.
3. Option 2: TRS limit Each new or existing sulfur recovery unit (Claus or other type, regardless of size) not subject to the NSPS for sulfur oxides in 40 CFR 60.104(a)(2)	a. Maintain the daily average combustion zone temperature above the level established during the performance test.	Collecting the hourly and daily average temperature monitoring data according to § 63.1572; and maintaining the daily average combustion zone temperature at or above the limit established during the performance test.
	b. The daily average oxygen concentration in the vent stream (percent, dry basis) must not fall below the level established during the performance test.	Collecting the hourly and daily average O_2 monitoring data according to § 63.1572; and maintaining the average O_2 concentration above the level established during the performance test.

TABLE 36 TO SUBPART UUU OF PART 63.—WORK PRACTICE STANDARDS FOR HAP EMISSIONS FROM BYPASS LINES

[As stated in § 63.1569(a)(1), you must meet each work practice standard in the following table that applies to you]

Option	You must meet one of these equipment standards * * *
1. Option 1	Install and operate a device (including a flow indicator, level recorder, or electronic valve position monitor) to continuously detect, at least every hour, whether flow is present in the bypass line. Install the device at or as near as practical to the entrance to any bypass line that could divert the vent stream away from the control device to the atmosphere.
2. Option 2	Install a car-seal or lock-and-key device placed on the mechanism by which the bypass device flow position is controlled (e.g., valve handle, damper level) when the bypass device is in the closed position such that the bypass line valve cannot be opened without breaking the seal or removing the device.
3. Option 3	Seal the bypass line by installing a solid blind between piping flanges.
4. Option 4	Vent the bypass line to a control device that meets the appropriate requirements in this subpart.

TABLE 37 TO SUBPART UUU OF PART 63.—REQUIREMENTS FOR PERFORMANCE TESTS FOR BYPASS LINES

[As stated in § 63.1569(b)(1), you must meet each requirement in the following table that applies to you]

For this standard . . .	You must . . .
1. Option 1: Install and operate a flow indicator, level recorder, or electronic valve position monitor.	Record during the performance test for each type of control device whether the flow indicator, level recorder, or electronic valve position monitor was operating and whether flow was detected at any time during each hour of level the three runs comprising the performance test.

TABLE 38 TO SUBPART UUU OF PART 63.—INITIAL COMPLIANCE WITH WORK PRACTICE STANDARDS FOR HAP EMISSIONS FROM BYPASS LINES

[As stated in § 63.1569(b)(2), you must meet each requirement in the following table that applies to you]

For * * *	For this work practice standard * * *	You have demonstrated initial compliance if * * *
1. Each new or existing bypass line associated with a catalytic cracking unit, catalylic reforming unit, or sulfur recovery unit.	a. Option 1: Install and operate a device (including a flow indicator, level recorder, or electronic valve position monitor) to continuously detect, at least every hour, whether flow is present in the bypass line. Install the device at or as near as practical to the entrance to any bypass line that could divert the vent stream away from the control device to the atmosphere.	The installed equipment operates properly during each run of the performance test and no flow is present in the line during the test.
	b. Option 2: Install a car-seal or lock-and-key device placed on the mechanism by which the bypass device flow position is controlled (e.g., valve handle, damper level) when the bypass device is in the closed position such that the bypass line valve cannot be opened without breaking the seal or removing the device.	As part of the notification of compliance status, you certify that you installed the equipment, the equipment was operational by your compliance date, and you identify what equipment was installed.
	c. Option 3: Seal the bypass line by installing a solid blind between piping flanges.	See item 1.b. of this table.
	d. Option 4: Vent the bypass line to a control device that meets the appropriate requirements in this subpart.	See item 1.b. of this table.

TABLE 39 TO SUBPART UUU OF PART 63.—CONTINUOUS COMPLIANCE WITH WORK PRACTICE STANDARDS FOR HAP EMISSIONS FROM BYPASS LINES

[As stated in § 63.1569(c)(1), you must meet each requirement in the following table that applies to you]

If you elect this standard * * *	You must demonstrate continuous compliance by * * *
1. Option 1: Flow indicator, level recorder, or electronic valve position monitor.	Continuously monitoring and recording whether flow is present in the bypass line; visually inspecting the device at least once every hour if the device is not equipped with a recording system that provides a continuous record; and recording whether the device is operating properly and whether flow is present in the bypass line.
2. Option 2: Car-seal or lock-and-key device	Visually inspecting the seal or closure mechanism at least once every month; and recording whether the bypass line valve is maintained in the closed position and whether flow is present in the line.
3. Option 3: Solid blind flange	Visually inspecting the blind at least once a month; and recording whether the blind is maintained in the correct position such that the vent stream cannot be diverted through the bypass line.
4. Option 4: Vent to control device	Monitoring the control device according to appropriate subpart requirements.
5. Option 1, 2, 3, or 4	Recording and reporting the time and duration of any bypass.

TABLE 40 TO SUBPART UUU OF PART 63.—REQUIREMENTS FOR INSTALLATION, OPERATION, AND MAINTENANCE OF CONTINUOUS OPACITY MONITORING SYSTEMS AND CONTINUOUS EMISSION MONITORING SYSTEMS

[As stated in § 63.1572(a)(1) and (b)(1), you must meet each requirement in the following table that applies to you]

This type of continuous opacity or emission monitoring system * * *	Must meet these requirements * * *
1. Continuous opacity monitoring system	Performance specification 1 (40 CFR part 60, appendix B).
2. CO continuous emission monitoring system	Performance specification 4 (40 CFR part 60, appendix B); span value of 1,000 ppm; and procedure 1 (40 CFR part 60, appendix F) except relative accuracy test audits are required annually instead of quarterly.
3. CO continuous emission monitoring system used to demonstrate emissions average under 50 ppm (dry basis).	Performance specification 4 (40 CFR part 60, appendix B); and span value of 100 ppm.
4. SO_2 continuous emission monitoring for sulfur recovery unit with oxidation control system or reduction control system; this monitor must include an O_2 monitor for correcting the data for excess air.	Performance specification 2 (40 CFR part 60, appendix B); span values of 500 ppm SO_2 and 10 percent O_2; use Methods 6 or 6C and 3A or 3B (40 CFR part 60, appendix A) for certifying O_2 monitor; and procedure 1 (40 CFR part 60, appendix F) except relative accuracy test audits are required annually instead of quarterly.
5. Reduced sulfur and O_2 continuous emission monitoring system for sulfur recovery unit with reduction control system not followed by incineration; this monitor must include an O_2 monitor for correcting the data for excess air unless exempted.	Performance specification 5 (40 CFR part 60, appendix B), except calibration drift specification is 2.5 percent of the span value instead of 5 percent; 450 ppm reduced sulfur and 10 percent O_2; use Methods 15 or 15A and 3A or 3B (40 CFR part 60, appendix A) for certifying O_2 monitor; if Method 3A or 3B yields O_2 concentrations below 0.25 percent during the performance evaluation, the O_2 concentration can be assumed to be zero and the O_2 monitor is not required; and procedure 1 (40 CFR part 60, appendix F), except relative accuracy test audits, are required annually instead of quarterly.
6. Instrument with an air or O2 dilution and oxidation system to convert reduced sulfur to SO_2 for continuously monitoring the concentration of SO_2 instead of reduced sulfur monitor and O_2 monitor.	Performance specification 5 (40 CFR part 60, appendix B); span value of 375 ppm SO_2 and 10 percent O_2; use Methods 15 or 15A and 3A or 3B for certifying O_2 monitor; and procedure 1 (40 CFR part 60, appendix F), except relative accuracy test audits, are required annually instead of quarterly.
7. TRS continuous emission monitoring system for sulfur recovery unit; this monitor must include an O_2 monitor for correcting the data for excess air.	Performance specification 5 (40 CFR part 60, appendix B).
8. O_2 monitor for oxygen concentration	If necessary due to interferences, locate the oxygen sensor prior to the introduction of any outside gas stream; performance specification 3 (40 CFR part 60, appendix B; span value for O_2 sensor is 10 percent; and procedure 1 (40 CFR part 60, appendix F), except relative accuracy test audits, are required annually instead of quarterly.

TABLE 41 TO SUBPART UUU OF PART 63.—REQUIREMENTS FOR INSTALLATION, OPERATION, AND MAINTENANCE OF CONTINUOUS PARAMETER MONITORING SYSTEMS

[As stated in § 63.1572(c)(1), you must meet each requirement in the following table that applies to you]

If you use a continuous parameter monitoring system to measure and record * * *	You must * * *
1. Voltage and secondary current or total power input.	At least monthly, inspect all components of the continuous parameter monitoring system for integrity and all electrical connections for continuity; and record the results of each inspection.
2. Pressure drop [1]	Locate the pressure sensor(s) in a position that provides a representative measurement of the pressure; minimize or eliminate pulsating pressure, vibration, and internal and external corrosion; use a gauge with an accuracy ± 2 percent over the operating range; check pressure tap for plugs at least once a week; using a manometer, check gauge calibration quarterly and transducer calibration monthly; for a semi-regenerative catalytic reforming unit, you can check the calibration quarterly and monthly or prior to regeneration, whichever is longer; record the results of each calibration; conduct calibration checks any time the sensor exceeds the manufacturer's specified maximum operating pressure range, or install a new pressure sensor; at least monthly, inspect all components for integrity, all electrical connections for continuity, and all mechanical connections for leakage; and record the results of each inspection.
3. Air flow rate, gas flow rate, or total water (or scrubbing liquid) flow rate.	Locate the flow sensor(s) and other necessary equipment such as straightening vanes in a position that provides representative flow; use a flow rate sensor with an accuracy within ±5 percent; reduce swirling flow or abnormal velocity distributions due to upstream and downstream disturbances; conduct a flow sensor calibration check at least semiannually; for a semi-regenerative catalytic reforming unit, you can check the calibration at least semiannually or prior to regeneration, whichever is longer; record the results of each calibration; if you elect to comply with Option 3 (Ni lb/hr) or Option 4 (Ni lb/1,000 lbs of coke burn-off) for the HAP metal emission limitations in § 63.1564, install the continuous parameter monitoring system for gas flow rate as close as practical to the continuous opacity monitoring system; and if you don't use a continuous opacity monitoring system, install the continuous parameter monitoring system for gas flow rate as close as practical to the control device.
4. Combustion zone temperature	Install the temperature sensor in the combustion zone or in the ductwork immediately downstream of the combustion zone before any substantial heat exchange occurs; locate the temperature sensor in a position that provides a representative temperature; use a temperature sensor with an accuracy of ±1 percent of the temperature being measured, expressed in degrees Celsius (C) or ±0.5 degrees C, whichever is greater; shield the temperature sensor system from electromagnetic interference and chemical contaminants; if you use a chart recorder, it must have a sensitivity in the minor division of at least 20 degrees Fahrenheit; perform an electronic calibration at least semiannually according to the procedures in the manufacturer's owners manual; following the electronic calibration, conduct a temperature sensor validation check, in which a second or redundant temperature sensor placed nearby the process temperature sensor must yield a reading within 16.7 degrees C of the process temperature sensor's reading; record the results of each calibration and validation check; conduct calibration and validation checks any time the sensor exceeds the manufacturer's specified maximum operating temperature range, or install a new temperature sensor; and at least monthly, inspect all components for integrity and all electrical connections for continuity, oxidation, and galvanic corrosion.
5. pH	Locate the pH sensor in a position that provides a representative measurement of pH; ensure the sample is properly mixed and representative of the fluid to be measured; check the pH meter's calibration on at least two points every 8 hours of process operation; at least monthly, inspect all components for integrity and all electrical components for continuity; record the results of each inspection; and if you use pH strips to measure the pH of the water exiting a wet scrubber as an alternative to a continuous parameter monitoring system, you must use pH strips with an accuracy of ±10 percent.
6. HCl concentration	Use a colormetric tube sampling system with a printed numerical scale in ppmv, a standard measurement range of 1 to 10 ppmv (or 1 to 30 ppmv if applicable), and a standard deviation for measured values of no more than ±15 percent. System must include a gas detection pump and hot air probe if needed for the measurement range.

[1] Not applicable to non-venturi wet scrubbers of the jet-ejector design.

TABLE 42 TO SUBPART UUU OF PART 63.—ADDITIONAL INFORMATION FOR INITIAL NOTIFICATION OF COMPLIANCE STATUS

[As stated in § 63.1574(d), you must meet each requirement in the following table that applies to you]

For * * *	You must provide this additional information * * *
1. Identification of affected sources and emission points.	Nature, size, design, method of operation, operating design capacity of each affected source; identify each emission point for each HAP; identify any affected source or vent associated with an affected source not subject to the requirements of subpart UUU.
2. Initial compliance	Identification of each emission limitation you will meet for each affected source, including any option you select (i.e., NSPS, PM or Ni, flare, percent reduction, concentration, options for bypass lines); if applicable, certification that you have already conducted a performance test to demonstrate initial compliance with the NSPS for an affected source; certification that the vents meet the applicable emission limit and the continuous opacity or that the emission monitoring system meets the applicable performance specification; if applicable, certification that you have installed and verified the operational status of equipment by your compliance date for each bypass line that meets the requirements of Option 2, 3, or 4 in § 63.1569 and what equipment you installed; identification of the operating limit for each affected source, including supporting documentation; if your affected source is subject to the NSPS, certification of compliance with NSPS emission limitations and performance specifications; a brief description of performance test conditions (capacity, feed quality, catalyst, etc.); an engineering assessment (if applicable); and if applicable, the flare design (e.g., steam-assisted, air-assisted, or non-assisted), all visible emission readings, heat content determinations, flow rate measurements, and exit velocity determinations made during the Method 22 test.
3. Continuous compliance	Each monitoring option you elect; and identification of any unit or vent for which monitoring is not required; and the definition of ''operating day.'' (This definition, subject to approval by the applicable permitting authority, must specify the times at which a 24-hr operating day begins and ends.)

TABLE 43 TO SUBPART UUU OF PART 63.—REQUIREMENTS FOR REPORTS

[As stated in § 63.1575(a), you must meet each requirement in the following table that applies to you]

You must submit a(n) * * *	The report must contain * * *	You must submit the report * * *
1. Compliance report	If there are not deviations from any emission limitation or work practice standard that applies to you, a statement that there were no deviations from the standards during the reporting period and that no continuous opacity monitoring system or continuous emission monitoring system was inoperative, inactive, out-of-control, repaired, or adjusted; and if you have a deviation from any emission limitation or work practice standard during the reporting period, the report must contain the information in § 63.1575(d) or (e)	Semiannually according to the requirements in § 63.1575(b).

TABLE 44 TO SUBPART UUU OF PART 63.—APPLICABILITY OF NESHAP GENERAL PROVISIONS TO SUBPART UUU

[As stated in § 63.1577, you must meet each requirement in the following table that applies to you]

Citation	Subject	Applies to subpart UUU	Explanation
§ 63.1	Applicability	Yes.	Except that subpart UUU specifies calendar or operating day.
§ 63.2	Definitions	Yes.	
§ 63.3	Units and Abbreviations	Yes.	
§ 63.4	Prohibited Activities	Yes.	
§ 63.5(a)–(c)	Construction and Reconstruction.	Yes	In § 63.5(b)(4), replace the reference to § 63.9 with § 63.9(b)(4) and (5).

[As stated in § 63.1577, you must meet each requirement in the following table that applies to you]

Citation	Subject	Applies to subpart UUU	Explanation
§ 63.5(d)(1)(i)	Application for Approval of Construction or Reconstruction—General Application Requirements.	Yes	Except, subpart UUU specifies the application is submitted as soon as practicable before startup but no later than 90 days (rather than 60) after the promulgation date where construction or reconstruction had commenced and initial startup had not occurred before promulgation.
§ 63.5(d)(1)(ii)		Yes	Except that emission estimates specified in § 63.5(d)(1)(ii)(H) are not required.
§ 63.5(d)(1)(iii)		No	Subpart UUU specifies submission of notification of compliance status.
§ 63.5(d)(2)		No.	
§ 63.5(d)(3)		Yes	Except that § 63.5(d)(3)(ii) does not apply.
§ 63.5(d)(4)		Yes.	
§ 63.5(e)	Approval of Construction or Reconstruction.		
§ 63.5(f)(1)	Approval of Construction or Reconstruction Based on State Review.	Yes.	
§ 63.5(f)(2)		Yes	Except that 60 days is changed to 90 days and cross-reference to § 63.9(b)(2) does not apply.
§ 63.6(a)	Compliance with Standards and Maintenance—Applicability.	Yes.	
§ 63.6(b)(1)–(4)	Compliance Dates for New and Reconstructed Sources.	Yes.	
§ 63.6(b)(5)		Yes	Except that subpart UUU specifies different compliance dates for sources.
§ 63.6(b)(6)	[Reserved]	Not applicable.	
§ 63.6(b)(7)	Compliance Dates for New and Reconstructed Area Sources That Become Major.	Yes.	
§ 63.6(c)(1)–(2)	Compliance Dates for Existing Sources.	Yes	Except that for subpart UUU specifies different compliance dates for sources subject to Tier II gasoline sulfur control requirements.
§ 63.6(c)(3)–(4)	[Reserved]	Not applicable.	
§ 63.6(c)(5)	Compliance Dates for Existing Area Sources That Become Major.	Yes.	
§ 63.6(d)	[Reserved]	Not applicable.	
§ 63.6(e)(1)–(2)	Operation and Maintenance Requirements.	Yes.	
§ 63.6(e)(3)(i)–(iii)	Startup, Shutdown, and Malfunction Plan.	Yes.	
§ 63.6(e)(3)(iv)		Yes	Except that reports of actions not consistent with plan are not required within 2 and 7 days of action but rather must be included in next periodic report.
§ 63.6(e)(3)(v)–(viii)		Yes	The owner or operator is only required to keep the latest version of the plan.
§ 63.6(f)(1)–(2)(iii)(C)	Compliance with Emission Standards.	Yes.	
§ 63.6(f)(2)–(iii)(D)		No.	
§ 63.6(f)(2)(iv)–(v)		Yes.	
§ 63.6(f)(3)		Yes.	

[As stated in §63.1577, you must meet each requirement in the following table that applies to you]

Citation	Subject	Applies to subpart UUU	Explanation
§63.6(g)	Alternative Standard	Yes.	
§63.6(h)	Opacity/VE Standards	Yes.	
§63.6(h)(2)(i)	Determining Compliance with Opacity/VE Standards.	No	Subpart UUU specifies methods.
§63.6(h)(2)(ii)	[Reserved]	Not applicable.	
§63.6(h)(2)(iii)		Yes.	
§63.6(h)(3)	[Reserved]	Not applicable.	
§63.6(h)(4)	Notification of Opacity/VE Observation Date.	Yes	Applies to Method 22 tests.
§63.6(h)(5)	Conducting Opacity/VE Observations.	No.	
§63.6(h)(6)	Records of Conditions During Opacity/VE Observations.	Yes	Applies to Method 22 observations.
§63.6(h)(7)(i)	Report COM Monitoring Data from Performance Test.	Yes.	
§63.6(h)(7)(ii)	Using COM Instead of Method 9.	No.	
§63.6(h)(7)(iii)	Averaging Time for COM during Performance Test.	Yes.	
§63.6(h)(7)(iv)	COM Requirements	Yes.	
§63.6(h)(8)	Determining Compliance with Opacity/VE Standards.	Yes.	
§63.6(h)(9)	Adjusted Opacity Standard	Yes.	
§63.6(i)(1)–(14)	Extension of Compliance	Yes	Not applicable to an affected source with Tier II compliance date. May be applicable to an affected source exempt from Tier II rule.
§63.6(i)(15)	[Reserved]	Not applicable.	
§63.6(i)(16)		Yes.	

Subpart VVV—National Emission Standards for Hazardous Air Pollutants: Publicly Owned Treatment Works

SOURCE: 64 FR 57579, Oct. 26, 1999, unless otherwise noted.

APPLICABILITY

§63.1580 Am I subject to this subpart?

(a) You are subject to this subpart if the following are all true:

(1) You own or operate a publicly owned treatment works (POTW) that includes an affected source (§63.1595);

(2) The affected source is located at a major source of hazardous air pollutant (HAP) emissions; and

(3) Your POTW is required to develop and implement a pretreatment program as defined by 40 CFR 403.8 (for a POTW owned or operated by a municipality, state, or intermunicipal or interstate agency), or your POTW would meet the general criteria for development and implementation of a pretreatment program (for a POTW owned or operated by a department, agency, or instrumentality of the Federal government).

NOTE TO PARAGRAPH (a)(2): See §63.2 of the national emission standards for hazardous air pollutants (NESHAP) general provisions in subpart A of this part for a definition of major source.

(b) If your existing POTW treatment plant is not located at a major source as of October 26, 1999, but thereafter becomes a major source for any reason other than reconstruction, then, for the purpose of this subpart, your POTW treatment plant would be considered an existing source.

(c) If an industrial major source complies with applicable NESHAP requirements by using the treatment and controls located at your POTW, your POTW is considered to be a major source regardless of whether you otherwise meet the applicable criteria.

(d) If you reconstruct your POTW treatment plant, then the requirements for a new or reconstructed POTW treatment plant, as defined in §63.1595, apply.

§ 63.1581 Does the subpart distinguish between different types of POTW treatment plants?

Yes, POTW treatment plants are divided into two subcategories. A POTW treatment plant which does not meet the characteristics of an industrial POTW treatment plant belongs in the non-industrial POTW treatment plant subcategory as defined in § 63.1595.

INDUSTRIAL POTW TREATMENT PLANT DESCRIPTION AND REQUIREMENTS

§ 63.1582 What are the characteristics of an industrial POTW treatment plant?

(a) Your POTW is an industrial POTW treatment plant if an industrial discharger complies with its NESHAP by using the treatment and controls located at your POTW. Your POTW accepts the regulated waste stream and provides treatment and controls as an agent for the industrial discharger. Industrial POTW treatment plant is defined in § 63.1595.

(b) If, in the future, an industrial discharger begins complying with its NESHAP by using the treatment and controls at your POTW, then on the date that the industrial discharger certifies compliance, your POTW treatment plant will be considered an industrial POTW treatment plant.

(c) If your POTW treatment plant accepts one or more specific regulated industrial waste streams as part of compliance with one or more other NESHAP, then you are subject to all the requirements of each appropriate NESHAP for each waste stream, as described in the following section. In the case of overlapping NESHAP requirements, the more stringent of the requirements will apply.

§ 63.1583 What are the emission points and control requirements for an industrial POTW treatment plant?

(a) The emission points and control requirements for an existing industrial POTW treatment plant are specified in the appropriate NESHAP(s) for the industrial user(s) (see § 63.1582). For example, an existing industrial POTW treatment plant that provides treatment for a facility subject to subpart FF of this part, the National Emission Standard for Benzene Waste Operations, must meet the treatment and control requirements specified in § 61.348(d)(4) of this chapter.

(b) The emission points and control requirements for a new or reconstructed industrial POTW treatment plant are either those specified by the particular NESHAP(s) which apply to the industrial user(s) who discharge their waste for treatment to the POTW, or those emission points and control requirements set forth in § 63.1586. The set of control requirements which applies to a particular new or reconstructed POTW is that set which requires the most stringent overall control of HAP emissions. If you are uncertain which set of requirements is more stringent, this determination should be made in consultation with the permitting authority. Reconstruction is defined in § 63.1595.

§ 63.1584 When do I have to comply?

(a) *Existing industrial POTW treatment plant*. If you have an existing industrial POTW treatment plant, the appropriate NESHAP(s) for the industrial user(s) sets the compliance date, or the compliance date is 60 days after October 26, 1999, whichever is later.

(b) *New industrial POTW treatment plant*. If you have a new industrial POTW treatment plant, you must be in compliance as soon as you begin accepting the waste stream(s) for treatment. If you begin accepting a specific regulated industrial waste stream(s) for treatment, you must be in compliance by the time specified in the appropriate NESHAP(s) for the industrial user(s).

§ 63.1585 How does an industrial POTW treatment plant demonstrate compliance?

(a) An existing industrial POTW treatment plant demonstrates compliance by operating treatment and control devices which meet all requirements specified in the appropriate industrial NESHAP(s). Requirements may include performance tests, routine monitoring, recordkeeping, and reporting.

(b) If you have a new or reconstructed industrial POTW plant, you

must first determine whether the control requirements set forth in the applicable industrial NESHAP(s) or the control requirements applicable to a new or reconstructed nonindustrial POTW under §63.1586 would require more stringent overall control of HAP emissions. You must then meet whichever set of requirements is more stringent. If you determine that the controls required by the applicable industrial NESHAP(s) are more stringent, you demonstrate compliance by operating treatment and control devices which meet all requirements specified in those industrial NESHAP(s). If you determine that the controls required for a new or reconstructed nonindustrial POTW are more stringent, you demonstrate compliance by meeting all requirements in §§63.1586 through 63.1590.

NON-INDUSTRIAL POTW TREATMENT PLANT REQUIREMENTS

§63.1586 What are the emission points and control requirements for a non-industrial POTW treatment plant?

There are no control requirements for an existing non-industrial POTW treatment plant. The control requirements for a new or reconstructed non-industrial POTW treatment plant are as follows:

(a) Covers on the emission points up to, but not including, the secondary influent pumping station or the secondary treatment units. These emission points are treatment units that include, but are not limited to, influent waste stream conveyance channels, bar screens, grit chambers, grinders, pump stations, aerated feeder channels, primary clarifiers, primary effluent channels, and primary screening stations. In addition, all covered units, except primary clarifiers, must have the air in the headspace ducted to a control device in accordance with the standards for closed-vent systems and control devices in §63.693 of subpart DD of this part, except you may substitute visual inspections for leak checks rather than Method 21 of Appendix A of part 60 of this chapter. Reconstruction is defined in §63.1595.

(1) Covers must be tightly fitted and designed and operated to minimize exposure of the wastewater to the atmosphere. This includes, but is not limited to, the absence of visible cracks, holes, or gaps in the roof sections or between the roof and the supporting wall; broken, cracked, or otherwise damaged seals or gaskets on closure devices; and broken or missing hatches, access covers, caps, or other closure devices.

(2) If wastewater is in a treatment unit, each opening must be maintained in a closed, sealed position, unless plant personnel are present and conducting wastewater or sludge sampling, or equipment inspection, maintenance, or repair.

(b) As an alternative to the requirements in paragraph (a) of this section, you may comply by demonstrating, for all units up to the secondary influent pumping station or the secondary treatment units, that the fraction emitted does not exceed 0.014. You must demonstrate that for your POTW, the sum of all HAP emissions from those units divided by the sum of all HAP mass loadings results in a annual rolling average of the fraction emitted no greater than 0.014. You may use any combination of pretreatment, wastewater treatment plant modifications, and control devices to achieve this performance standard; however, you must demonstrate, to the Administrator's satisfaction that:

(1) You have accurately determined your POTW's annual HAP mass loadings and your POTW's annual HAP emissions as of the date of start-up;

(2) Your POTW meets the fraction emitted standard of 0.014 or less; and

(3) Your POTW has established procedures to demonstrate continuous compliance which are consistent with the criteria set forth in §63.1588(c)(4).

[64 FR 57579, Oct. 26, 1999, as amended at 66 FR 16142, Mar. 23, 2001]

§63.1587 When do I have to comply?

If your POTW treatment plant began construction on or after December 1, 1998, you must comply with all provisions of this subpart either immediately upon startup, or by six months after October 26, 1999, whichever date is later.

§ 63.1588 What inspections must I conduct?

(a) If your treatment units are required to have covers, you must conduct the following inspections:

(1) You must visually check the cover and its closure devices for defects that could result in air emissions. Defects include, but are not limited to, visible cracks, holes, or gaps in the roof sections or between the roof and the supporting wall; broken, cracked, or otherwise damaged seals or gaskets on closure devices; and broken or missing hatches, access covers, caps, or other closure devices.

(2) You must perform an initial visual inspection with follow-up inspections at least once per year.

(3) In the event that you find a defect on a treatment unit in use, you must repair the defect within 45 days. If you cannot repair within 45 days, you must notify the EPA or the designated State authority immediately and report the reason for the delay and the date you expect to complete the repair. If you find a defect on a treatment unit that is not in service, you must repair the defect prior to putting the treatment unit back in wastewater service.

(b) If you own or operate a control device used to meet the requirements for § 63.1586, you must comply with the inspection and monitoring requirements of § 63.695(c) of subpart DD of this part.

(c) To comply with the performance standard specified in § 63.1586(b), you must develop an inspection and monitoring plan. This inspection and monitoring plan must include, at a minimum, the following:

(1) A method to determine, to the satisfaction of the Administrator, the influent HAP mass loading, *i.e.*, the annual mass quantity for each HAP entering the wastewater treatment plant.

(2) A method to determine, to the satisfaction of the Administrator, your POTW's annual HAP emissions for all units up to and including the secondary influent pumping station or up to and not including the secondary treatment units as of October 26, 1999. The method you use to determine your HAP emissions, such as modeling or direct source measurement, must:

(i) Be approved by your EPA Regional Office, State, or local regulatory agency for use at your POTW;

(ii) Account for all factors affecting emissions from your plant including, but not limited to, emissions from wastewater treatment units; emissions resulting from inspection, maintenance, and repair activities; fluctuations (*e.g.*, daily, monthly, annual, seasonal) in your influent wastewater HAP concentrations; annual industrial loading; performance of control devices; or any other factors that could affect your annual HAP emissions; and

(iii) Include documentation that the values and sources of all data, operating conditions, assumptions, etc., used in your method result in an accurate estimation of annual emissions from your plant.

(3) Documentation, to the satisfaction of the Administrator, that your POTW meets the fraction emitted standard of 0.014 or less, *i.e.*, the sum of all HAP emissions from paragraph (c)(2) of this section divided by the sum of all HAP mass loadings from paragraph (c)(1) of this section results in a fraction emitted of 0.014 or less as described in paragraph (c)(4) of this section.

(4) A method to demonstrate, to the satisfaction of the Administrator, that your POTW is in continuous compliance with the requirements of § 63.1586(b). Continuous compliance means that your emissions, when averaged over the course of a year, do not exceed the level of emissions that allows your POTW to comply with § 63.1586(b). For example, you may identify a parameter(s) that you can monitor that assures your emissions, when averaged over the entire year, will meet the requirements in § 63.1586(b). Some example parameters that may be considered for monitoring include your wastewater influent HAP concentration and flow, industrial loading from your permitted industrial dischargers, and your control device performance criteria. Where emission reductions are due to proper operation of equipment, work practices, or other operational procedures, your demonstration must specify the frequency of inspections and the number of days to completion of repairs. You must, at a minimum,

perform the following each month to demonstrate that your annual rolling average of the fraction emitted is 0.014 or less:

(i) Determine the average daily flow of the wastewater entering your POTW treatment plant for the month;

(ii) Determine the flow-weighted monthly concentration of each HAP in your influent listed in Table 1 to subpart DD of this part;

(iii) Using the current month's information in paragraphs (c)(4)(i) and (ii) of this section, determine a total annual loading (Mg/year) of each HAP entering your POTW treatment plant;

(iv) Sum up the values in paragraph (c)(4)(iii) of this section and determine a total annual loading value (Mg/year) for all HAP entering your POTW treatment plant for the current month;

(v) Based on the current month's information in paragraph (c)(4)(iii) of this section along with source testing and emission modeling, for each HAP, determine annual emissions (Mg/year) from all wastewater units up to, but not including, secondary treatment units;

(vi) Sum up the values in paragraph (c)(4)(v) of this section and determine the total annual emissions value for the month for all HAP from all wastewater units up to, but not including, secondary treatment units;

(vii) Calculate the fraction emitted value for the month by dividing the total annual HAP emissions value from paragraph (c)(4)(vi) of this section by the total annual loading from paragraph (c)(4)(iv) of this section; and

(viii) Average the fraction emitted value for the month determined in paragraph (c)(4)(vii) of this section, with the values determined for the previous 11 months, to calculate an annual rolling average of the fraction HAP emitted.

§ 63.1589 What records must I keep?

(a) To comply with the equipment standard specified in § 63.1586(a), you must prepare and maintain the records required in paragraphs (a)(1) through (4) of this section:

(1) A record for each treatment unit inspection required by § 63.1588(a). You must include a treatment unit identification number (or other unique identification description as selected by you) and the date of inspection.

(2) For each defect detected during inspections required by § 63.1588(a), you must record the location of the defect, a description of the defect, the date of detection, the corrective action taken to repair the defect, and the date the repair to correct the defect is completed.

(3) In the event that repair of the defect is delayed, in accordance with the provisions of § 63.1588(a)(3), you must also record the reason for the delay and the date you expect to complete the repair.

(4) If you own or operate a control device used to meet the requirements for § 63.1586, you must comply with the recordkeeping requirements of § 63.696(a), (b), (g), and (h).

(b) To comply with the performance standard specified in § 63.1586(b), you must prepare and maintain the records required in paragraphs (b)(1) through (3) of this section:

(1) A record of the methods and data used to determine your POTW's annual HAP emissions as determined in § 63.1588(c)(2);

(2) A record of the methods and data used to determine that your POTW meets the fraction emitted standard of 0.014 or less, as determined in § 63.1588(c)(3); and

(3) A record of the methods and data that demonstrates that your POTW is in continuous compliance with the requirements of § 63.1588(c)(4).

[64 FR 57579, Oct. 26, 1999, as amended at 66 FR 16142, Mar. 23, 2001]

§ 63.1590 What reports must I submit?

(a)(1) If you have an existing nonindustrial POTW treatment plant, you are not required to submit a notification of compliance status. If you have a new or reconstructed nonindustrial POTW treatment plant, you must submit to the Administrator a notification of compliance status, signed by the responsible official who must certify its accuracy, attesting to whether your POTW treatment plant has complied with this subpart. This notification must be submitted initially, and each time a notification of compliance status is required under this subpart. At a minimum, the notification must list—

(i) The methods that were used to determine compliance;

(ii) The results of any monitoring procedures or methods that were conducted;

(iii) The methods that will be used for determining continuing compliance;

(iv) The type and quantity of HAP emitted by your POTW treatment plant;

(v) A description of the air pollution control equipment (or method) for each emission point; and

(vi) Your statement that your POTW treatment plant has complied with this subpart.

(2) You must send this notification before the close of business on the 60th day following the completion of the relevant compliance demonstration activity specified in this subpart.

(b) After you have been issued a title V permit, you must comply with all requirements for compliance status reports contained in your title V permit, including reports required under this subpart. After you have been issued a title V permit, and each time a notification of compliance status is required under this subpart, you must submit the notification of compliance status to the appropriate permitting authority, as described in paragraph (d) of this section, following completion of the relevant compliance demonstration activity specified in this subpart.

(c) You must comply with the delay of repair reporting required in § 63.1588(a)(3).

(d) If your State has not been delegated authority, you must submit reports to your EPA Regional Office. If your State has been delegated authority, you must submit reports to your delegated State authority, and you must send a copy of each report submitted to the State to your EPA Regional Office. Your EPA Regional Office, at its discretion, may waive this requirement for any reports.

(e) You may apply to the Administrator for a waiver of recordkeeping and reporting requirements by complying with the requirements of § 63.10(f) of subpart A of this part.

(f) If you own or operate a control device used to meet the requirements of § 63.1586(a), you must submit the reports required by § 63.697(b) of subpart DD of this part, including a notification of performance tests; a performance test report; a startup, shutdown, and malfunction report; and a summary report.

(g) To comply with the performance standard specified in § 63.1586(b), you must submit, for approval by the Administrator, an initial report explaining your compliance approach 90 days prior to beginning operation of your new or reconstructed POTW. You must also submit a startup, shutdown, and malfunction report.

[64 FR 57579, Oct. 26, 1999, as amended at 66 FR 16142, Mar. 23, 2001]

GENERAL REQUIREMENTS

§ 63.1591 What are my notification requirements?

(a) If you are subject to this subpart, and your State has not been delegated authority, you must submit notifications to the appropriate EPA Regional Office. If your State has been delegated authority you must submit notifications to your State and a copy of each notification to the appropriate EPA Regional Office. The Regional Office may waive this requirement for any notifications at its discretion.

(b) You must notify the Administrator in writing no later than 120 calendar days after the effective date of this subpart (or within 120 calendar days after your POTW treatment plant becomes subject to the relevant standard), and you must provide the following information:

(1) Your name and address;

(2) The address (*i.e.*, physical location) of your POTW treatment plant;

(3) An identification of these standards as the basis of the notification and your POTW treatment plant's compliance date; and

(4) A brief description of the nature, size, design, and method of operation of your POTW treatment plant, including its operating design capacity and an identification of each point of emission for each HAP, or if a definitive identification is not yet possible, a preliminary identification of each point of emission for each HAP.

(c) You must notify the Administrator if your data show that you are no longer in continuous compliance.

§63.1592 Which General Provisions apply to my POTW treatment plant?

Table 1 to this subpart lists the General Provisions (40 CFR part 63, subpart A) which apply to POTW treatment plants.

§63.1593 How will the EPA determine if I am in compliance with this subpart?

(a) The Administrator will determine compliance with this subpart by reviewing your reports and records or by inspecting your POTW treatment plant.

(b) If you fail to comply with any or all of the provisions of this subpart, you will be considered in violation of this subpart. For example, failure to perform any or all of the following, specified in §63.1588, would be a violation: failure to visually inspect the cover on your treatment unit, failure to repair a defect on a treatment unit in use within the specified time period, failure to report a delay in repair, failure to determine your POTW's annual HAP emissions when your new or reconstructed POTW becomes subject to this subpart, failure to demonstrate that your POTW achieves an HAP fraction emitted of 0.014, or failure to demonstrate that your POTW is in continuous compliance with the requirements of §63.1586(b).

(c) Your POTW treatment plant may be exempted from compliance with this subpart if the President determines that the technology to implement these standards is not available, and that it is in the national security interests of the United States to do so. This exemption may last for up to 2 years at a time and may be extended for additional periods of up to 2 years each.

§63.1594 Who enforces this subpart?

If the Administrator has delegated authority to your State, then the State enforces this subpart. If the Administrator has not delegated authority to your State, then the EPA Regional Office enforces this subpart.

§63.1595 List of definitions.

Affected source means the group of all equipment that comprise the POTW treatment plant.

Area source means any stationary source of HAP that is not a major source.

Cover means a device that prevents or reduces air pollutant emissions to the atmosphere by forming a continuous barrier over the waste material managed in a treatment unit. A cover may have openings (such as access hatches, sampling ports, gauge wells) that are necessary for operation, inspection, maintenance, and repair of the treatment unit on which the cover is used. A cover may be a separate piece of equipment which can be detached and removed from the treatment unit, or a cover may be formed by structural features permanently integrated into the design of the treatment unit. The cover and its closure devices must be made of suitable materials that will minimize exposure of the waste material to the atmosphere, to the extent practical, and will maintain the integrity of the cover and its closure devices throughout its intended service life.

Fraction emitted means the fraction of the mass of HAP entering the POTW wastewater treatment plant which is emitted prior to secondary treatment. The value is calculated using the following steps:

(1) Determine mass emissions from all equipment up to, but not including, secondary treatment for each HAP listed in Table 1 to subpart DD of this part;

(2) Sum the HAP emissions (ΣE);

(3) Sum the HAP mass loadings (ΣL) in the influent to the POTW wastewater treatment plant; and

(4) Calculate the fraction emitted (f_e monthly) using f_e monthly = $\Sigma E/\Sigma L$.

HAP means hazardous air pollutant(s).

Industrial POTW means a POTW that accepts a waste stream regulated by an industrial NESHAP and provides treatment and controls as an agent for the industrial discharger. The industrial discharger complies with its NESHAP by using the treatment and controls located at the POTW. For example, an industry discharges its benzene-containing waste stream to the POTW for

treatment to comply with 40 CFR part 61, Subpart FF—National Emission Standard for Benzene Waste Operations. This definition does not include POTW treating waste streams not specifically regulated under another NESHAP.

Industrial user means a nondomestic source introducing any pollutant or combination of pollutants into a POTW. Industrial users can be commercial or industrial facilities whose wastes enter local sewers.

Non-industrial POTW means a POTW that does not meet the definition of an industrial POTW as defined above.

Publicly owned treatment works (POTW) means a treatment works, as that term is defined by section 112(e)(5) of the Clean Air Act, which is owned by a municipality (as defined by section 502(4) of the Clean Water Act), a State, an intermunicipal or interstate agency, or any department, agency, or instrumentality of the Federal Government. This definition includes any intercepting sewers, outfall sewers, sewage collection systems, pumping, power, and other equipment. The wastewater treated by these facilities is generated by industrial, commercial, and domestic sources. As used in this regulation, the term POTW refers to both any publicly owned treatment works which is owned by a State, municipality, or intermunicipal or interstate agency and therefore eligible to receive grant assistance under the Subchapter II of the Clean Water Act, and any federally owned treatment works as that term is described in section 3023 of the Solid Waste Disposal Act.

POTW treatment plant means that portion of the POTW which is designed to provide treatment (including recycling and reclamation) of municipal sewage and industrial waste.

Reconstruction means the replacement of components of an affected or a previously unaffected stationary source such that:

(1) The fixed capital cost of the new components exceeds 50 percent of the fixed capital cost that would be required to construct a comparable new source; and

(2) It is technologically and economically feasible for the reconstructed source to meet the relevant standard(s) established by the Administrator (or a State) pursuant to section 112 of the Act. Upon reconstruction, an affected source, or a stationary source that becomes an affected source, is subject to relevant standards for new sources, including compliance dates, irrespective of any change in emissions of HAP from that source.

Secondary treatment means treatment processes, typically biological, designed to reduce the concentrations of dissolved and colloidal organic matter in wastewater.

Waste and wastewater means a material, or spent or used water or waste, generated from residential, industrial, commercial, mining, or agricultural operations or from community activities that contain dissolved or suspended matter, and that is discarded, discharged, or is being accumulated, stored, or physically, chemically, thermally, or biologically treated in a publicly owned treatment works.

[64 FR 57579, Oct. 26, 1999 as amended at 66 FR 16142, Mar. 23, 2001]

TABLE 1 TO SUBPART VVV OF PART 63—APPLICABILITY OF 40 CFR PART 63 GENERAL PROVISIONS TO SUBPART VVV

General provisions reference	Applicable to subpart VVV	Explanation
§ 63.1		APPLICABILITY.
§ 63.1(a)(1)	Yes	Terms defined in the Clean Air Act.
§ 63.1(a)(2)	Yes	General applicability explanation.
§ 63.1(a)(3)	Yes	Cannot diminish a stricter NESHAP.
§ 63.1(a)(4)	Yes	Not repetitive. Doesn't apply to section 112(r).
§ 63.1(a)(5)	Yes	Section reserved.
§ 63.1(a)(6)–(8)	Yes	Contacts and authorities.
§ 63.1(a)(9)	Yes	Section reserved.
§ 63.1(a)(10)	Yes	Time period definition.
§ 63.1(a)(11)	Yes	Postmark explanation.
§ 63.1(a)(12)–(14)	Yes	Time period changes. Regulation conflict. Force and effect of subpart A.
§ 63.1(b)(1)	Yes	Initial applicability determination of subpart A.

General provisions reference	Applicable to subpart VVV	Explanation
§ 63.1(b)(2)	Yes	Operating permits by States.
§ 63.1(b)(3)	No	Subpart VVV specifies recordkeeping of records of applicability determination.
§ 63.1(c)(1)	Yes	Requires compliance with both subpart A and subpart VVV.
§ 63.1(c)(2)(i)	Yes	State options regarding title V permit.
§ 63.1(c)(2)(ii)–(iii)	No	State options regarding title V permit.
§ 63.1(c)(3)	Yes	Section reserved.
§ 63.1(c)(4)	Yes	Extension of compliance.
§ 63.1(c)(5)	No	Subpart VVV addresses area sources becoming major due to increase in emissions.
§ 63.1(d)	Yes	Section reserved.
§ 63.1(e)	Yes	Title V permit before a relevant standard is established.
§ 63.2	Yes	DEFINITIONS.
§ 63.3	Yes	UNITS AND ABBREVIATIONS.
§ 63.4		PROHIBITED ACTIVITIES AND CIRCUMVENTION.
§ 63.4(a)(1)–(3)	Yes	Prohibits operation in violation of subpart A.
§ 63.4(a)(4)	Yes	Section reserved.
§ 63.4(a)(5)	Yes	Compliance dates.
§ 63.4(b)	Yes	Circumvention.
§ 63.4(c)	Yes	Severability.
§ 63.5		CONSTRUCTION AND RECONSTRUCTION.
§ 63.5(a)(1)	Yes	Construction and reconstruction.
§ 63.5(a)(2)	Yes	New source—effective dates.
§ 63.5(b)(1)	Yes	New sources subject to relevant standards.
§ 63.5(b)(2)	Yes	Section reserved.
§ 63.5(b)(3)	Yes	No new major sources without Administrator approval.
§ 63.5(b)(4)	Yes	New major source notification.
§ 63.5(b)(5)	Yes	New major sources must comply.
§ 63.5(b)(6)	Yes	New equipment added considered part of major source.
§ 63.5(c)	Yes	Section reserved.
§ 63.5(d)(1)	Yes	Implementation of section 112(l)(2)—application of approval of new source construction.
§ 63.5(d)(2)	Yes	Application for approval of construction for new sources listing and describing planned air pollution control system.
§ 63.5(d)(3)	Yes	Application for reconstruction.
§ 63.5(d)(4)	Yes	Administrator may request additional information.
§ 63.5(e)	Yes	Approval of reconstruction.
§ 63.5(f)(1)	Yes	Approval based on State review.
§ 63.5(f)(2)	Yes	Application deadline.
§ 63.6		COMPLIANCE WITH STANDARDS AND MAINTENANCE REQUIREMENTS.
§ 63.6(a)	Yes	Applicability of compliance with standards and maintenance requirements.
§ 63.6(b)	Yes	Compliance dates for new and reconstructed sources.
§ 63.6(c)	Yes	Compliance dates for existing sources apply to existing industrial POTW treatment plants.
§ 63.6(d)	Yes	Section reserved.
§ 63.6(e)	Yes	Operation and maintenance requirements apply to new sources.
§ 63.6(f)	Yes	Compliance with non-opacity emission standards applies to new sources.
§ 63.6(g)	Yes	Use of alternative non-opacity emission standards applies to new sources.
§ 63.6(h)	No	POTW treatment plants do not typically have visible emissions.
§ 63.6(i)	Yes	Extension of compliance with emission standards applies to new sources.
§ 63.6(j)	Yes	Presidential exemption from compliance with emission standards.
§ 63.7		PERFORMANCE TESTING REQUIREMENTS.
§ 63.7(a)	Yes	Performance testing is required for new sources.
§ 63.7(b)	Yes	New sources must notify the Administrator of intention to conduct performance testing.
§ 63.7(c)	Yes	New sources must comply with quality assurance program requirements.
§ 63.7(d)	Yes	New sources must provide performance testing facilities at the request of the Administrator.
§ 63.7(e)	Yes	Requirements for conducting performance tests apply to new sources.
§ 63.7(f)	Yes	New sources may use an alternative test method.

General provisions reference	Applicable to subpart VVV	Explanation
§ 63.7(g)	Yes	Requirements for data analysis, recordkeeping, and reporting associated with performance testing apply to new sources.
§ 63.7(h)	Yes	New sources may request a waiver of performance tests.
§ 63.8		MONITORING REQUIREMENTS.
§ 63.8(a)	Yes	Applicability of monitoring requirements.
§ 63.8(b)	Yes	Monitoring shall be conducted by new sources.
§ 63.8(c)	Yes	New sources shall operate and maintain continuous monitoring systems (CMS).
§ 63.8(d)	Yes	New sources must develop and implement a CMS quality control program.
§ 63.8(e)	Yes	New sources may be required to conduct a performance evaluation of CMS.
§ 63.8(f)	Yes	New sources may use an alternative monitoring method.
§ 63.8(g)	Yes	Requirements for reduction of monitoring data.
§ 63.9		NOTIFICATION REQUIREMENTS.
§ 63.9(a)	Yes	Applicability of notification requirements.
§ 63.9(b)	Yes	Initial notification requirements.
§ 63.9(c)	Yes	Request for extension of compliance with subpart VVV.
§ 63.9(d)	Yes	Notification that source is subject to special compliance requirements as specified in § 63.6(b)(3) and (4).
§ 63.9(e)	Yes	Notification of performance test.
§ 63.9(f)	No	POTW treatment plants do not typically have visible emissions.
§ 63.9(g)	Yes	Additional notification requirements for sources with continuous emission monitoring systems.
§ 63.9(h)	Yes	Notification of compliance status when the source becomes subject to subpart VVV.
§ 63.9(i)	Yes	Adjustments to time periods or postmark deadlines or submittal and review of required communications.
§ 63.9(j)	Yes	Change of information already provided to the Administrator.
§ 63.10		RECORDKEEPING AND REPORTING REQUIREMENTS.
§ 63.10(a)	Yes	Applicability of notification and reporting requirements.
§ 63.10(b)(1)–(2)	Yes	General recordkeeping requirements.
§ 63.10(b)(3)	No	Recording requirement for applicability determination.
§ 63.10(c)	Yes	Additional recordkeeping requirements for sources with continuous monitoring systems.
§ 63.10(d)	Yes	General reporting requirements.
§ 63.10(e)	Yes	Additional reporting requirements for sources with continuous monitoring systems.
§ 63.10(f)	Yes	Waiver of recordkeeping and reporting requirements.
§ 63.11		FLARES AS A CONTROL DEVICE.
§ 63.11(a) and (b)	Yes	If a new source uses flares to comply with the requirements of subpart VVV, the requirements of § 63.11 apply.
§ 63.12	Yes	STATE AUTHORITY AND DESIGNATION.
§ 63.13	Yes	ADDRESSES OF STATE AIR POLLUTION CONTROL AGENCIES AND EPA REGIONAL OFFICES.
§ 63.14	Yes	INCORPORATION BY REFERENCE.
§ 63.15	Yes	AVAILABILITY OF INFORMATION AND CONFIDENTIALITY.

[64 FR 57579, Oct. 26, 1999 as amended at 66 FR 16142, Mar. 23, 2001]

Subpart WWW [Reserved]

Subpart XXX—National Emission Standards for Hazardous Air Pollutants for Ferroalloys Production: Ferromanganese and Silicomanganese

SOURCE: 64 FR 27458, May 20, 1999, unless otherwise noted.

§§ 63.1620–63.1649 [Reserved]

§ 63.1650 Applicability and compliance dates.

(a) This subpart applies to all new and existing ferromanganese and silicomanganese production facilities that manufacture ferromanganese or silicomanganese and are major sources or are co-located at major sources of hazardous air pollutant emissions.

(b) The following sources at a ferromanganese and silicomanganese

production facility are subject to this subpart:

(1) Open submerged arc furnaces with a furnace power input of 22 MW or less when producing ferromanganese.

(2) Open submerged arc furnaces with a furnace power input greater than 22 MW when producing ferromanganese.

(3) Open submerged arc furnaces with a furnace power input greater than 25 MW when producing silicomanganese.

(4) Open submerged arc furnaces with a furnace power input of 25 MW or less when producing silicomanganese.

(5) Semi-sealed submerged arc furnaces when producing ferromanganese.

(6) Metal oxygen refining (MOR) process.

(7) Crushing and screening operations.

(8) Fugitive dust sources.

(c) A new affected source is one for which construction or reconstruction commenced after August 4, 1998.

(d) The following table specifies which provisions of subpart A of this part apply to owners and operators of ferromanganese and silicomanganese production facilities subject to this subpart:

GENERAL PROVISIONS APPLICABILITY TO SUBPART XXX

Reference, Subpart A General Provisions	Applies to Subpart XXX, §§ 63.1620–63.1679	Comment
63.1–63.5	Yes.	
63.6(a)–(g), (i)–(j)	Yes.	
63.6(h)(1)–(h)(6), (h)(8)–(h)(9)	Yes.	
63.7(h)(7)	No	§ 63.6(h)(7), use of continuous opacity monitoring system, not applicable.
63.7	Yes.	
63.8	Yes.	
63.9	Yes	Notification of performance test results changed to a 30-day notification period.
63.10	Yes	Allow changes in dates by which periodic reports are submitted by mutual agreement between the owner or operator and the State to occur any time after the source's compliance date.
63.11	No	Flares will not be used to comply with the emission limits.
63.12–63.15	Yes.	

(e) *Compliance dates.* (1) Each owner or operator of an existing affected source must comply with the requirements of this subpart no later than November 21, 2001.

(2) Each owner or operator of a new or reconstructed affected source that commences construction or reconstruction after August 4, 1998, must comply with the requirements of this subpart by May 20, 1999 or upon startup of operations, whichever is later.

[64 FR 27458, May 20, 1999, as amended at 66 FR 16012, Mar. 22, 2001]

§ 63.1651 Definitions.

Terms in this subpart are defined in the Clean Air Act (Act), in subpart A of this part, or in this section as follows:

Bag leak detection system means a system that is capable of continuously monitoring particulate matter (dust) loadings in the exhaust of a baghouse in order to detect bag leaks and other upset conditions. A bag leak detection system includes, but is not limited to, an instrument that operates on triboelectric, light scattering, light transmittance, or other effect to continuously monitor relative particulate matter loadings.

Capture system means the equipment (including hoods, ducts, fans, dampers, etc.) used to capture or transport particulate matter generated by an affected submerged arc furnace.

Casting means the period of time from when molten ferroalloy falls from the furnace tapping runner into the ladle until pouring into molds is completed. This includes the following operations: ladle filling, pouring alloy from one ladle to another, slag separation, slag removal, and ladle transfer by crane, truck, or other conveyance.

Crushing and screening equipment means the crushers, grinders, mills,

screens and conveying systems used to crush, size, and prepare for packing manganese-containing materials, including raw materials, intermediate products, and final products.

Fugitive dust source means a stationary source from which manganese-bearing particles are discharged to the atmosphere due to wind or mechanical inducement such as vehicle traffic. Fugitive dust sources include plant roadways, yard areas, and outdoor material storage and transfer operations.

Furnace power input means the resistive electrical power consumption of a submerged arc furnace, expressed as megawatts (MW).

Malfunction means any sudden, infrequent, and not reasonably preventable failure of air pollution control equipment, process equipment, or a process to operate in a normal or usual manner. Failures caused in part by poor maintenance or careless operation are not malfunctions.

Metal oxygen refining (MOR) process means the reduction of the carbon content of ferromanganese through the use of oxygen.

Open submerged arc furnace means an electric submerged arc furnace that is equipped with a canopy hood above the furnace to collect primary emissions.

Operating time means the period of time in hours that the affected source is in operation beginning at a startup and ending at the next shutdown.

Plant roadway means any area at a ferromanganese and silicomanganese production facility that is subject to plant mobile equipment, such as fork lifts, front end loaders, or trucks, carrying manganese-bearing materials. Excluded from this definition are employee and visitor parking areas, provided they are not subject to traffic by plant mobile equipment.

Primary emissions means gases and emissions collected by hoods and ductwork located above an open furnace or under the cover of a semi-closed or sealed furnace.

Sealed submerged arc furnace means an electric submerged arc furnace equipped with a total enclosure or cover from which primary emissions are evacuated directly.

Semi-closed submerged arc furnace means an electric submerged arc furnace equipped with a partially sealed cover over the furnace. This cover is equipped with openings to allow penetration of the electrodes into the furnace. Mix is introduced into the furnace around the electrode holes forming a partial seal between the electrodes and the cover. Furnace emissions generated under the cover are ducted to an emission control device. Emissions that escape the cover are collected and vented through stacks directly to the atmosphere.

Shop means the building which houses one or more submerged arc furnaces.

Shutdown means the cessation of operation of an affected source for any purpose.

Startup means the setting in operation of an affected source for any purpose.

Submerged arc furnace means any furnace wherein electrical energy is converted to heat energy by transmission of current between electrodes partially submerged in the furnace charge. The furnace may be of an open, semi-sealed, or sealed design.

Tapping emissions means a source of air pollutant emissions that occur during the process of removing the molten product from the furnace.

Tapping period means the time from when a tap hole is opened until the time a tap hole is closed.

§ 63.1652 Emission standards.

(a) *New and reconstructed submerged arc furnaces.* No owner or operator shall cause to be discharged into the atmosphere from any new or reconstructed submerged arc furnace exhaust gases (including primary and tapping) containing particulate matter in excess of one of the following:

(1) 0.23 kilograms per hour per megawatt (kg/hr/MW) (0.51 pounds per hour per megawatt [lb/hr/MW]), or

(2) 35 milligrams per dry standard cubic meter (mg/dscm) (0.015 grains per dry standard cubic foot [gr/dscf]).

(b) *Existing open submerged arc furnaces.* No owner or operator shall cause to be discharged into the atmosphere from any existing open submerged arc

furnace exhaust gases (including primary and tapping) containing particulate matter in excess of one of the following:

(1) 9.8 kilograms per hour (kg/hr) (21.7 pounds per hour (lb/hr)) when producing ferromanganese in an open furnace operating at a furnace power input of 22 MW or less; or

(2) 13.5 kg/hr (29.8 lb/hr) when producing ferromanganese in an open furnace operating at a furnace power input greater than 22 MW; or

(3) 16.3 kg/hr (35.9 lb/hr) when producing silicomanganese in an open furnace operating at a furnace power input greater than 25 MW; or

(4) 12.3 kg/hr (27.2 lb/hr) when producing silicomanganese in an open furnace operating at a furnace power input of 25 MW or less.

(c) *Existing semi-sealed submerged arc furnaces.* No owner or operator shall cause to be discharged into the atmosphere from any existing semi-sealed submerged arc furnace exhaust gases (including primary, tapping, and vent stacks) containing particulate matter in excess of 11.2 kg/hr (24.7 lb/hr) when producing ferromanganese.

(d) *MOR process.* No owner or operator shall cause to be discharged into the atmosphere from any new, reconstructed, or existing MOR process exhaust gases containing particulate matter in excess of 69 mg/dscm (0.03 gr/dscf).

(e) *Crushing and screening equipment.* (1) *New and reconstructed equipment.* No owner or operator shall cause to be discharged into the atmosphere from any new or reconstructed piece of equipment associated with crushing and screening exhaust gases containing particulate matter in excess of 50 mg/dscm (0.022 gr/dscf).

(2) *Existing equipment.* No owner or operator shall cause to be discharged into the atmosphere from any existing piece of equipment associated with crushing and screening exhaust gases containing particulate matter in excess of 69 (mg/dscm) (0.03 gr/dscf).

[64 FR 27458, May 20, 1999, as amended at 66 FR 16013, Mar. 22, 2001]

§ 63.1653 Opacity standards.

No owner or operator shall cause emissions exiting from a shop due solely to operations of any affected submerged arc furnace, to exceed 20 percent opacity for more than one 6-minute period during any performance test, with the following exceptions:

(a) Visible particulate emissions from a shop due solely to operation of a semi-closed submerged arc furnace, may exceed 20 percent opacity, measured as a 6-minute average, one time during any performance test, so long as the emissions never exceed 60 percent opacity, measured as a 6-minute average.

(b) Blowing taps, poling and oxygen lancing of the tap hole; burndowns associated with electrode measurements; and maintenance activities associated with submerged arc furnaces and casting operations are exempt from the opacity standards specified in this section.

§ 63.1654 Operational and work practice standards.

(a) *Fugitive dust sources.* (1) Each owner or operator of an affected ferromanganese and silicomanganese production facility must prepare, and at all times operate according to, a fugitive dust control plan that describes in detail the measures that will be put in place to control fugitive dust emissions from the individual fugitive dust sources at the facility.

(2) The owner or operator must submit a copy of the fugitive dust control plan to the designated permitting authority on or before the applicable compliance date for the affected source as specified in § 63.1650(e). The requirement for the owner or operator to operate the facility according to a written fugitive dust control plan must be incorporated in the operating permit for the facility that is issued by the designated permitting authority under part 70 of this chapter.

(3) The owner or operator may use existing manuals that describe the measures in place to control fugitive dust sources required as part of a State implementation plan or other federally enforceable requirement for particulate matter to satisfy the requirements of paragraph (a)(1) of this section.

(b) *Baghouses equipped with bag leak detection systems.* The owner or operator of a new or reconstructed submerged

arc furnace must install and continuously operate a bag leak detection system if the furnace's primary and/or tapping emissions are ducted to a negative pressure baghouse or to a positive pressure baghouse equipped with a stack. The owner or operator must maintain and operate each baghouse such that the following conditions are met:

(1) The alarm on the system does not sound for more than 5 percent of the total operating time in a 6-month reporting period.

(2) A record is made of the date and time of each alarm and procedures to determine the cause of the alarm are initiated within 1 hour of the alarm according to the plan for corrective action required under § 63.1657(a)(7).

§ 63.1655 Maintenance requirements.

(a) The owner or operator of an affected source must comply with the requirements of § 63.6(e) of subpart A.

(b)(1) The owner or operator must develop and implement a written maintenance plan for each air pollution control device associated with submerged arc furnaces, metal oxygen refining processes, and crushing and screening operations subject to the provisions of this part. The owner or operator must keep the maintenance plan on record and available for the Administrator's inspection for the life of the air pollution control device or until the affected source is no longer subject to the provisions of this part.

(2) To satisfy the requirement to develop maintenance plans, the owner or operator may use the affected source's standard operating procedures (SOP) manual or other plan, provided the alternative plan meets the requirements of this paragraph and is made available for inspection when requested by the Administrator.

(c) The procedures specified in the maintenance plan must include a preventive maintenance schedule that is consistent with good air pollution control practices for minimizing emissions and, for baghouses, ensure that the requirements specified in § 63.1657(a) are met.

(d) The owner or operator must perform monthly inspections of the equipment that is important to the performance of the furnace capture system. This inspection must include an examination of the physical condition of the equipment, suitable for detecting holes in ductwork or hoods, flow constrictions in ductwork due to dents or accumulated dust, and operational status of flow rate controllers (pressure sensors, dampers, damper switches, etc.). Any deficiencies must be recorded and proper maintenance and repairs performed.

§ 63.1656 Performance testing, test methods, and compliance demonstrations.

(a) *Performance testing.* (1) All performance tests must be conducted according to the requirements in § 63.7 of subpart A.

(2) Each performance test must consist of three separate and complete runs using the applicable test methods.

(3) Each run must be conducted under conditions that are representative of normal process operations.

(4) Performance tests conducted on air pollution control devices serving submerged arc furnaces must be conducted such that at least one tapping period, or at least 20 minutes of a tapping period, whichever is less, is included in at least two of the three runs. The sampling time for each run must be at least as long as three times the average tapping period of the tested furnace, but no less than 60 minutes.

(5) The sample volume for each run must be at least 0.9 dscm (30 dscf).

(b) *Test methods.* The following test methods in Appendix A of part 60 of this chapter must be used to determine compliance with the emission standards.

(1) Method 1 to select the sampling port location and the number of traverse points.

(2) Method 2 to determine the volumetric flow rate of the stack gas.

(3) Method 3 to determine the dry molecular weight of the stack gas.

(4) Method 4 to determine the moisture content of the stack gas.

(5) Method 5 to determine the particulate matter concentration of the stack gas for negative pressure baghouses and positive pressure baghouses with stacks.

(6) Method 5D to determine particulate matter concentration and volumetric flow rate of the stack gas for positive pressure baghouses without stacks.

(7) Method 9 to determine opacity.

(8) The owner or operator may use equivalent alternative measurement methods approved by the Administrator following the procedures described in §63.7(f) of subpart A.

(c) *Compliance demonstration with the emission standards.* (1) The owner or operator must conduct an initial performance test for air pollution control devices or vent stacks subject to §63.1652(a) through (e) to demonstrate compliance with the applicable emission standards.

(2) The owner or operator must conduct annual performance tests for the air pollution control devices and vent stacks associated with the submerged arc furnaces, with the exception of any air pollution control devices that serve tapping emissions combined with non-furnace emissions, such as the MOR process or equipment associated with crushing and screening. Also excluded are air pollution control devices that serve dedicated non-furnace emissions, such as the MOR process or equipment associated with crushing and screening. The results of these annual tests will be used to demonstrate compliance with the emission standards in §63.1652(a) through (e), as applicable.

(3) Following development, and approval, if required, of the site-specific test plan, the owner or operator must conduct a performance test for each air pollution control device or vent stack to measure particulate matter and determine compliance with the applicable standard.

(i) An owner or operator of sources subject to the particulate matter concentration standards in §63.1652(a)(2), (d), or (e), must determine compliance as follows:

(A) Determine the particulate matter concentration using Method 5 or 5D, as applicable.

(B) Compliance is demonstrated if the average concentration for the three runs comprising the performance test does not exceed the standard.

(ii) An owner or operator of sources subject to the particulate mass rate standards in §63.1652(b) or (c) must determine compliance as follows:

(A) Determine the particulate matter concentration and volumetric flow rate using Method 5 or 5D, as applicable.

(B) Compute the mass rate (E_M) of particulate matter for each run using the following equation:

$$E_M = \left[\sum_{i=1}^{N} C_{si} Q_{sdi} \right] / K$$

Where:

E_M = mass rate of particulate matter, kg/hr (lb/hr).

N = total number of exhaust streams at which emissions are quantified.

C_{si} = concentration of particulate matter from exhaust stream ''i'', mg/dscm (gr/dscf).

Q_{sdi} = volumetric flow rate of effluent gas from exhaust stream ''i'', dscm/hr (dscf/hr)

K = conversion factor, 1×10^6 mg/kg (7,000 gr/lb).

(C) Compliance is demonstrated if the average of the mass rates for the three runs comprising the performance test does not exceed the standard.

(iii) An owner or operator of sources subject to the particulate matter process-weighted rate standard in §63.1652(a)(1) must determine compliance as follows:

(A) Determine particulate matter concentration and volumetric flow rate using Method 5 or 5D, as applicable.

(B) Compute the process-weighted mass rate (E_P) of particulate matter for each run using the following equation:

$$E_P = \left[\sum_{i=1}^{N} C_{si} Q_{sdi} \right] / PK$$

Where:

E_P = process-weighted mass rate of particulate matter, kg/hr/MW (lb/hr/MW).

N = total number of exhaust streams at which emissions are quantified.

C_{si} = concentration of particulate matter from exhaust stream ''i'', mg/dscm (gr/dscf)

Q_{sdi} = volumetric flow rate of effluent gas from exhaust stream ''i'', dscm/hr (dscf/hr)

P = Average furnace power input, MW

K = conversion factor, 1×10^6 mg/kg (7,000 gr/lb).

(C) Compliance is demonstrated if the average process-weighted mass rate

for the three runs comprising the performance test does not exceed the standard.

(4) If a venturi scrubber is used to comply with the emission standards, the owner or operator must establish as a site-specific operating parameter the lowest average pressure drop on any individual complying run in the three runs constituting any compliant test. The pressure drop must be monitored at least every 5 minutes during the test and hourly averages recorded.

(i) [Reserved]

(ii) The owner or operator may augment the data obtained under paragraph (a)(4) of this section by conducting multiple performance tests to establish a range of compliant operating parameter values. The lowest value of this range would be selected as the operating parameter monitoring value. The use of historic compliance data may be used to establish the compliant operating parameter value if the previous values were recorded during performance tests using the same test methods specified in this subpart and established as required in paragraph (a)(4) of this section.

(d) *Compliance demonstration with opacity standards.* (1)(i) The owner or operator subject to § 63.1653 must conduct initial opacity observations of the shop building to demonstrate compliance with the applicable opacity standards according to § 63.6(h)(5), which addresses the conduct of opacity or visible emission observations.

(ii) In conducting the opacity observations of the shop building, the observer must limit his or her field of view to the area of the shop building roof monitor that corresponds to the placement of the affected submerged arc furnaces.

(iii) The owner or operator must conduct the opacity observations according to EPA Method 9 of 40 CFR part 60, appendix A, for a minimum of 60 minutes.

(2)(i) When demonstrating initial compliance with the shop building opacity standard, as required by paragraph (d)(1) of this section, the owner or operator must simultaneously establish parameter values for one of the following: the control system fan motor amperes and all capture system damper positions, the total volumetric flow rate to the air pollution control device and all capture system damper positions, or volumetric flow rate through each separately ducted hood that comprises the capture system.

(ii) The owner or operator may petition the Administrator to reestablish these parameters whenever he or she can demonstrate to the Administrator's satisfaction that the submerged arc furnace operating conditions upon which the parameters were previously established are no longer applicable. The values of these parameters determined during the most recent demonstration of compliance must be maintained at the appropriate level for each applicable period.

(3) The owner or operator must demonstrate continuing compliance with the opacity standards by following the monitoring requirements specified in § 63.1657(c) and the reporting and recordkeeping requirements specified in §§ 63.1659(b)(4) and 63.1660(b).

(e) *Compliance demonstration with the operational and work practice standards.* (1) *Fugitive dust sources.* Failure to have a fugitive dust control plan or failure to report deviations from the plan and take necessary corrective action would be a violation of the general duty to ensure that fugitive dust sources are operated and maintained in a manner consistent with good air pollution control practices for minimizing emissions per § 63.6(e)(1)(i) of subpart A.

(2) *Baghouses equipped with bag leak detection systems.* The owner or operator demonstrates compliance with the bag leak detection system requirements by submitting reports as required by § 63.1659(b)(5) showing that the alarm on the system does not sound for more than 5 percent of the total operating time in a 6-month period. Calculate the percentage of total operating time the alarm on the bag leak detection system sounds as follows:

(i) Do not include alarms that occur due solely to a malfunction of the bag leak detection system in the calculation.

(ii) Do not include alarms that occur during startup, shutdown, and malfunction in the calculation if the condition is described in the startup, shutdown, and malfunction plan and the

owner or operator follows all the procedures in the plan defined for this condition.

(iii) Count 1 hour of alarm time for each alarm where the owner or operator initiates procedures to determine the cause within 1 hour of the alarm.

(iv) Count the actual time it takes the owner or operator to initiate procedures to determine the cause of the alarm for each alarm where the owner or operator does not initiate procedures to determine the cause within 1 hour of the alarm.

(v) Calculate the percentage of time the alarm on the bag leak detection system sounds as the ratio of the sum of alarm times to the total operating time multiplied by 100.

§63.1657 Monitoring requirements.

(a) *Baghouses*. (1) For the baghouses serving the submerged arc furnaces, the metal oxygen refining process, and crushing and screening operations, the owner or operator must observe on a daily basis for the presence of any visible emissions.

(2) In addition to the daily visible emissions observation, the owner or operator must conduct the following activities:

(i) Daily monitoring of pressure drop across each baghouse cell, or across the baghouse if it is not possible to monitor each cell individually, to ensure the pressure drop is within the normal operating range identified in the baghouse maintenance plan.

(ii) Weekly confirmation that dust is being removed from hoppers through visual inspection, or equivalent means of ensuring the proper functioning of removal mechanisms.

(iii) Daily check of compressed air supply for pulse-jet baghouses.

(iv) An appropriate methodology for monitoring cleaning cycles to ensure proper operation.

(v) Monthly check of bag cleaning mechanisms for proper functioning through visual inspection or equivalent means.

(vi) Quarterly visual check of bag tension on reverse air and shaker-type baghouses to ensure that the bags are not kinked (kneed or bent) or laying on their sides. Such checks are not required for shaker-type baghouses using self-tensioning (spring loaded) devices.

(vii) Quarterly confirmation of the physical integrity of the baghouse structure through visual inspection of the baghouse interior for air leaks.

(viii) Semiannual inspection of fans for wear, material buildup, and corrosion through visual inspection, vibration detectors, or equivalent means.

(3) In addition to meeting the requirements of paragraphs (a)(1) and (a)(2) of this section, the owner or operator of a new or reconstructed submerged arc furnace must install and continuously operate a bag leak detection system if the furnace primary and/or tapping emissions are ducted to a negative pressure baghouse or to a positive pressure baghouse equipped with a stack. The bag leak detection system must meet the following requirements:

(i) The bag leak detection system must be certified by the manufacturer to be capable of detecting particulate matter emissions at concentrations of 10 milligrams per actual cubic meter (0.0044 grains per actual cubic foot) or less.

(ii) The bag leak detection system sensor must provide output of relative particulate matter loadings, and the owner or operator must continuously record the output from the bag leak detection system.

(iii) The bag leak detection system must be equipped with an alarm system that will sound when an increase in relative particulate loadings is detected over a preset level. The alarm must be located where it can be heard by the appropriate plant personnel.

(iv) Each bag leak detection system that works based on the triboelectric effect must be installed, calibrated, operated, and maintained consistent with the U.S. Environmental Protection Agency guidance document ''Fabric Filter Bag Leak Detection Guidance'' (EPA–454/R–98–015). Other bag leak detection systems must be installed, calibrated, and maintained consistent with the manufacturer's written specifications and recommendations.

(v) The initial adjustment of the system must, at a minimum, consist of establishing the baseline output by adjusting the sensitivity (range) and the

averaging period of the device, and establishing the alarm set points and the alarm delay time.

(vi) Following initial adjustment, the owner or operator must not adjust the sensitivity or range, averaging period, alarm set points, or alarm delay time, except as detailed in the maintenance plan required under § 63.1655(b). In no event must the sensitivity be increased by more than 100 percent or decreased more than 50 percent over a 365-day period unless a responsible official certifies the baghouse has been inspected and found to be in good operating condition.

(vii) Where multiple detectors are required, the system's instrumentation and alarm may be shared among detectors.

(4) As part of the maintenance plan required by § 63.1655(b), the owner or operator must develop and implement corrective action procedures to be followed in the case of a bag leak detection system alarm (for baghouses equipped with such a system), the observation of visible emissions from the baghouse, or the indication through the periodic baghouse system inspections that the system is not operating properly. The owner or operator must initiate corrective action as soon as practicable after the occurrence of the observation or event indicating a problem.

(5) The corrective action plan must include procedures used to determine the cause of an alarm or other indications of problems as well as actions to minimize emissions. These actions may include the following:

(i) Inspecting the baghouse for air leaks, torn or broken bags or filter media, or any other condition that may cause an increase in emissions.

(ii) Sealing off defective bags or filter media.

(iii) Replacing defective bags or filter media, or otherwise repairing the control device.

(iv) Sealing off a defective baghouse compartment.

(v) Cleaning the bag leak detection system probe, or otherwise repairing the bag leak detection system.

(vi) Shutting down the process producing the particulate matter emissions.

(6) Failure to monitor or failure to take corrective action under the requirements of paragraph (a) of this section would be a violation of the general duty to operate in a manner consistent with good air pollution control practices that minimizes emissions per § 63.6(e)(1)(i) of subpart A.

(b) *Venturi scrubbers*. (1) The owner or operator must monitor the pressure drop across the venturi at least every 5 minutes and record the average hourly pressure drop. Measurement of an average hourly pressure drop less than the pressure drop operating parameter limit established during a successful compliance demonstration would be a violation of the applicable emission standard, unless the excursion in the pressure drop is due to a malfunction.

(2) As part of the maintenance plan required by § 63.1655(b), the owner or operator must develop and implement corrective action procedures to be followed in the case of a violation of the pressure drop requirement. The owner or operator must initiate corrective action as soon as practicable after the excursion.

(3) Failure to monitor or failure to take corrective action under the requirements of paragraph (b) of this section is a violation of the general duty to operate in a manner consistent with good air pollution control practices that minimizes emissions per § 63.6(e)(1)(i).

(c) *Shop opacity*. The owner or operator subject to the opacity standards in § 63.1653 must comply with one of the monitoring options in paragraphs (c)(1), (c)(2) or (c)(3) of this section. The selected option must be consistent with that selected during the initial performance test described in § 63.1656(d)(2). Alternatively, the owner or operator may use the provisions of § 63.8(f) to request approval to use an alternative monitoring method.

(1) The owner or operator must check and record the control system fan motor amperes and capture system damper positions once per shift.

(2) The owner or operator must install, calibrate, and maintain a monitoring device that continuously records the volumetric flow rate through each separately ducted hood.

(3) The owner or operator must install, calibrate, and maintain a monitoring device that continuously records the volumetric flow rate at the inlet of the air pollution control device and must check and record the capture system damper positions once per shift.

(4) The flow rate monitoring devices must meet the following requirements:

(i) Be installed in an appropriate location in the exhaust duct such that reproducible flow rate monitoring will result.

(ii) Have an accuracy ±10 percent over its normal operating range and be calibrated according to the manufacturer's instructions.

(5) The Administrator may require the owner or operator to demonstrate the accuracy of the monitoring device(s) relative to Methods 1 and 2 of appendix A of part 60 of this chapter.

(6) Failure to maintain the appropriate capture system parameters (fan motor amperes, flow rate, and/or damper positions) establishes the need to initiate corrective action as soon as practicable after the monitoring excursion in order to minimize excess emissions.

(7) Failure to monitor or failure to take corrective action under the requirements of paragraph (c) of this section is a violation of the general duty to operate in a manner consistent with good air pollution control practices that minimizes emissions per §63.6(e)(1)(i).

§63.1658 Notification requirements.

(a) As required by §63.9(b) of subpart A, unless otherwise specified in this subpart, the owner or operator must submit the following written notifications to the Administrator:

(1) The owner or operator of an area source that subsequently becomes subject to the requirements of the standard must provide notification to the applicable permitting authority as required by §63.9(b)(1).

(2) As required by §63.9(b)(2), the owner or operator of an affected source that has an initial startup before the effective date of the standard must notify the Administrator that the source is subject to the requirements of the standard. The notification must be submitted no later than 120 calendar days after May 20, 1999 (or within 120 calendar days after the source becomes subject to this standard) and must contain the information specified in §63.9(b)(2)(i) through (b)(2)(v).

(3) As required by §63.9(b)(3), the owner or operator of a new or reconstructed affected source, or a source that has been reconstructed such that it is an affected source, that has an initial startup after the effective date and for which an application for approval of construction or reconstruction is not required under §63.5(d), must notify the Administrator in writing that the source is subject to the standards no later than 120 days after initial startup. The notification must contain the information specified in §63.9(b)(2)(i) through (b)(2)(v), delivered or postmarked with the notification required in §63.9(b)(5).

(4) As required by §63.9(b)(4), the owner or operator of a new or reconstructed major affected source that has an initial startup after the effective date of this standard and for which an application for approval of construction or reconstruction is required under §63.5(d) must provide the information specified in §63.9(b)(4)(i) through (b)(4)(v).

(5) As required by §63.9(b)(5), the owner or operator who, after the effective date of this standard, intends to construct a new affected source or reconstruct an affected source subject to this standard, or reconstruct a source such that it becomes an affected source subject to this standard, must notify the Administrator, in writing, of the intended construction or reconstruction.

(b) *Request for extension of compliance.* As required by §63.9(c), if the owner or operator of an affected source cannot comply with this standard by the applicable compliance date for that source, or if the owner or operator has installed BACT or technology to meet LAER consistent with §63.6(i)(5), he or she may submit to the Administrator (or the State with an approved permit program) a request for an extension of compliance as specified in §63.6(i)(4) through (i)(6).

(c) *Notification that source is subject to special compliance requirements.* As required by §63.9(d), an owner or operator

of a new source that is subject to special compliance requirements as specified in § 63.6(b)(3) and (b)(4) must notify the Administrator of his or her compliance obligations no later than the notification dates established in § 63.9(b) for new sources that are not subject to the special provisions.

(d) *Notification of performance test.* As required by § 63.9(e), the owner or operator of an affected source must notify the Administrator in writing of his or her intention to conduct a performance test at least 30 calendar days before the performance test is scheduled to begin to allow the Administrator to review and approve the site-specific test plan required under § 63.7(c) and to have an observer present during the test.

(e) *Notification of opacity and visible emission observations.* As required by § 63.9(f), the owner or operator of an affected source must notify the Administrator in writing of the anticipated date for conducting the opacity or visible emission observations specified in § 63.6(h)(5). The notification must be submitted with the notification of the performance test date, as specified in paragraph (d) of this section, or if visibility or other conditions prevent the opacity or visible emission observations from being conducted concurrently with the initial performance test required under § 63.7, the owner or operator must deliver or postmark the notification not less than 30 days before the opacity or visible emission observations are scheduled to take place.

(f) *Notification of compliance status.* The owner or operator of an affected source must submit a notification of compliance status as required by § 63.9(h). The notification must be sent before the close of business on the 60th day following completion of the relevant compliance demonstration.

§ 63.1659 Reporting requirements.

(a) *General reporting requirements.* The owner or operator of a ferromanganese and silicomanganese production facility must comply with all of the reporting requirements under § 63.10 of subpart A, unless otherwise specified in this subpart.

(1) *Frequency of reports.* As provided by § 63.10(a)(5), if the owner or operator is required to submit periodic reports to a State on an established time line, he or she may change the dates by which periodic reports submitted under this part may be submitted (without changing the frequency of reporting) to be consistent with the State's schedule by mutual agreement between the owner or operator and the State. This provision may be applied at any point after the source's compliance date.

(2) *Reporting results of performance tests.* As required by § 63.10(d)(2), the owner or operator of an affected source must report the results of the initial performance test as part of the notification of compliance status required in § 63.1658(f).

(3) [Reserved]

(4) *Periodic startup, shutdown, and malfunction reports.* (i) As required by § 63.10(d)(5)(i), if actions taken by an owner or operator during a startup, shutdown, or malfunction of an affected source (including actions taken to correct a malfunction) are consistent with the procedures specified in the startup, shutdown, and malfunction plan, the owner or operator must state such information in a semiannual report. The report, to be certified by the owner or operator or other responsible official, must be submitted semiannually and delivered or postmarked by the 30th day following the end of each calendar half; and

(ii) Any time an action taken by an owner or operator during a startup, shutdown, or malfunction (including actions taken to correct a malfunction) is not consistent with the procedures in the startup, shutdown, and malfunction plan, the owner or operator must comply with all requirements of § 63.10(d)(5)(ii).

(b) *Specific reporting requirements.* In addition to the information required under § 63.10, reports required under paragraph (a) of this section must include the information specified in paragraphs (b)(1) through (b)(5) of this section. As allowed by § 63.10(a)(3), if any State requires a report that contains all of the information required in a report listed in this section, an owner or operator may send the Administrator a copy of the report sent to the State to satisfy the requirements of this section for that report.

(1) *Air pollution control devices.* The owner or operator must submit reports that summarize the records maintained as part of the practices described in the maintenance plan for air pollution control devices required under §63.1655(b), including an explanation of the periods when the procedures were not followed and the corrective actions taken.

(2) *Venturi scrubbers.* In addition to the information required to be submitted in paragraph (b)(1) of this section, the owner or operator must submit reports that identify the periods when the average hourly pressure drop of venturi scrubbers used to control particulate emissions dropped below the levels established in §63.1656(c)(4), and an explanation of the corrective actions taken.

(3) *Fugitive dust.* The owner or operator must submit reports that explain the periods when the procedures outlined in the fugitive dust control plan pursuant to §63.1654(a) were not followed and the corrective actions taken.

(4) *Capture system.* The owner or operator must submit reports that summarize the monitoring parameter excursions measured pursuant to §63.1657(c) and the corrective actions taken.

(5) *Bag leak detection system.* The owner or operator must submit reports including the following information:

(i) Records of all alarms.

(ii) Description of the actions taken following each bag leak detection system alarm.

(iii) Calculation of the percent of time the alarm on the bag leak detection system sounded during the reporting period.

(6) *Frequency of reports.* (i) The owner or operator must submit reports pursuant to §63.10(e)(3) that are associated with excess emissions events such as the excursion of the scrubber pressure drop limit per paragraph (b)(2) of this section. These reports are to be submitted on a quarterly basis, unless the owner or operator can satisfy the requirements in §63.10(e)(3) to reduce the frequency to a semiannual basis.

(ii) All other reports specified in paragraphs (b)(1) through (b)(5) of this section must be submitted semiannually.

§63.1660 Recordkeeping requirements.

(a) *General recordkeeping requirements.* (1) The owner or operator of a ferromanganese and silicomanganese production facility must comply with all of the recordkeeping requirements under §63.10.

(2) As required by §63.10(b)(2), the owner or operator must maintain records for 5 years from the date of each record of:

(i) The occurrence and duration of each startup, shutdown, or malfunction of operation (i.e., process equipment and control devices);

(ii) The occurrence and duration of each malfunction of the source or air pollution control equipment;

(iii) All maintenance performed on the air pollution control equipment;

(iv) Actions taken during periods of startup, shutdown, and malfunction (including corrective actions to restore malfunctioning process and air pollution control equipment to its normal or usual manner of operation) when such actions are different from the procedures specified in the startup, shutdown, and malfunction plan;

(v) All information necessary to demonstrate conformance with the startup, shutdown, and malfunction plan when all actions taken during periods of startup, shutdown, and malfunction (including corrective actions) are consistent with the procedures specified in such plan. This information can be recorded in a checklist or similar form (see §63.10(b)(2)(v));

(vi) All required measurements needed to demonstrate compliance with the standard and to support data that the source is required to report, including, but not limited to, performance test measurements (including initial and any subsequent performance tests) and measurements as may be necessary to determine the conditions of the initial test or subsequent tests;

(vii) All results of initial or subsequent performance tests;

(viii) If the owner or operator has been granted a waiver from recordkeeping or reporting requirements under §63.10(f), any information demonstrating whether a source is meeting the requirements for a waiver of recordkeeping or reporting requirements;

(ix) If the owner or operator has been granted a waiver from the initial performance test under § 63.7(h), a copy of the full request and the Administrator's approval or disapproval;

(x) All documentation supporting initial notifications and notifications of compliance status required by § 63.9; and

(xi) As required by § 63.10(b)(3), records of any applicability determination, including supporting analyses.

(b) *Specific recordkeeping requirements.* (1) In addition to the general records required by paragraph (a) of this section, the owner or operator must maintain records for 5 years from the date of each record of:

(i) Records of pressure drop across the venturi if a venturi scrubber is used.

(ii) Records of manufacturer certification that monitoring devices are accurate to within 5 percent (unless otherwise specified in this subpart) and of calibrations performed at the manufacturer's recommended frequency, or at a frequency consistent with good engineering practice, or as experience dictates.

(iii) Records of bag leak detection system output.

(iv) An identification of the date and time of all bag leak detection system alarms, the time that procedures to determine the cause of the alarm were initiated, the cause of the alarm, an explanation of the actions taken, and the date and time the alarm was corrected.

(v) Copy of the written maintenance plan for each air pollution control device.

(vi) Copy of the fugitive dust control plan.

(vii) Records of each maintenance inspection and repair, replacement, or other corrective action.

(2) All records for the most recent 2 years of operation must be maintained on site. Records for the previous 3 years may be maintained off site.

§ 63.1661 Delegation of authorities.

In delegating implementation and enforcement authority to a State under subpart E of this part, the Administrator retains no authorities.

§§ 63.1662–63.1679 [Reserved]

Subpart CCCC—National Emission Standards for Hazardous Air Pollutants: Manufacturing of Nutritional Yeast

SOURCE: 66 FR 27884, May 21, 2001, unless otherwise noted.

WHAT THIS SUBPART COVERS

§ 63.2130 What is the purpose of this subpart?

This subpart establishes national emission limitations for hazardous air pollutants emitted from manufacturers of nutritional yeast. This subpart also establishes requirements to demonstrate initial and continuous compliance with the emission limitations.

§ 63.2131 Am I subject to this subpart?

(a) You are subject to this subpart if you own or operate a nutritional yeast manufacturing facility that is, is located at, or is part of a major source of hazardous air pollutants (HAP) emissions.

(1) A manufacturer of nutritional yeast is a facility that makes yeast for the purpose of becoming an ingredient in dough for bread or any other yeast-raised baked product, or for becoming a nutritional food additive intended for consumption by humans. A manufacturer of nutritional yeast does not include production of yeast intended for consumption by animals, such as an additive for livestock feed.

(2) A major source of HAP emissions is any stationary source or group of stationary sources located within a contiguous area and under common control that emits or has the potential to emit, considering controls, any single HAP at a rate of 9.07 megagrams (10 tons) or more per year or any combination of HAP at a rate of 22.68 megagrams (25 tons) or more per year.

(b) [Reserved]

§ 63.2132 What parts of my plant does this subpart cover?

(a) This subpart applies to each new, reconstructed, or existing ''affected source'' that produces *Saccharomyces cerevisiae* at a nutritional yeast manufacturing facility.

(b) The affected source is the collection of equipment used in the manufacture of the nutritional yeast species *Saccharomyces cerevisiae*. This collection of equipment includes, but is not limited to, fermentation vessels (fermenters). The collection of equipment used in the manufacture of the nutritional yeast species *Candida utilis* (torula yeast) is not part of the affected source.

(c) The emission limitations in this subpart apply to fermenters in the affected source that meet all of the criteria listed in paragraphs (c)(1) through (2) of this section.

(1) The fermenters are ''fed-batch'' as defined in §63.2192.

(2) The fermenters are used to support one of the last three fermentation stages in a production run, which may be referred to as ''stock, first generation, and trade,'' ''seed, semi-seed, and commercial,'' or ''CB4, CB5, and CB6'' stages.

(d) The emission limitations in this subpart do not apply to flask, pure-culture, yeasting-tank, or any other set-batch fermentation, and they do not apply to any operations after the last dewatering operation, such as filtration.

(e) The emission limitations in this subpart do not apply to the affected source during the production of specialty yeast (defined in §63.2192).

(f) An affected source is a ''new affected source'' if you commenced construction of the affected source after October 19, 1998, and you met the applicability criteria in §63.2131 at the time you commenced construction.

(g) An affected source is ''reconstructed'' if you meet the criteria as defined in §63.2.

(h) An affected source is ''existing'' if it is not new or reconstructed.

§63.2133 When do I have to comply with this subpart?

(a) If you have a new or reconstructed affected source, you must comply with paragraphs (a)(1) through (2) of this section.

(1) If you start up your affected source before May 21, 2001, then you must comply with the emission limitations in this subpart no later than May 21, 2001.

(2) If you start up your affected source after May 21, 2001, then you must comply with the emission limitations in this subpart upon startup of your affected source.

(b) If you have an existing affected source, you must comply with the emission limitations for existing sources no later than May 21, 2004.

(c) If you have an area source that increases its emissions, or its potential to emit, so that it becomes a major source of HAP, paragraphs (c)(1) through (2) of this section apply.

(1) Any portion of the existing facility that is a new affected source or a new reconstructed source must be in compliance with this subpart upon startup.

(2) All other parts of the source must be in compliance with this subpart by not later than 3 years after it becomes a major source.

(d) You must meet the notification requirements in §63.2180 according to the schedule in §63.2180 and in subpart A of this part.

EMISSION LIMITATIONS

§63.2140 What emission limitations must I meet?

You must meet all of the emission limitations in Table 1 to this subpart.

GENERAL COMPLIANCE REQUIREMENTS

§63.2150 What are my general requirements for complying with this subpart?

(a) You must be in compliance with the emission limitations in Table 1 to this subpart at all times, except during periods of malfunction.

(b) You must always operate and maintain your affected source, including monitoring equipment, according to the provisions in §63.6(e)(1)(i). If the date upon which you must demonstrate initial compliance as specified in §63.2160 falls after the compliance date specified for your affected source in §63.2133, then you must maintain a log detailing the operation and maintenance of the continuous monitoring systems and the process and emissions control equipment during the period between those dates.

(c) You must develop and implement a written malfunction plan. It will be

as specified in § 63.6(e)(3), except that the requirements for startup, shutdown, and maintenance plans, records and reports apply only to malfunctions. Under this subpart, a period of malfunction is expressed in whole batches and not in portions of batches.

TESTING AND INITIAL COMPLIANCE REQUIREMENTS

§ 63.2160 By what date must I conduct an initial compliance demonstration?

(a) For each emission limitation in Table 1 to this subpart for which compliance is demonstrated by monitoring fermenter exhaust, you must demonstrate initial compliance for the period ending on the last day of the month that is 12 calendar months (or 11 calendar months, if the compliance date for your source is the first day of the month) after the compliance date that is specified for your source in § 63.2133. (For example, if the compliance date is October 15, 2003, the first 12-month period for which you must demonstrate compliance would be October 15, 2003 through October 31, 2004.)

(b) For each emission limitation in Table 1 to this subpart for which initial compliance is demonstrated by monitoring brew ethanol concentration and calculating volatile organic compound (VOC) concentration in the fermenter exhaust according to the procedures in § 63.2161, you must demonstrate initial compliance within 180 calendar days before the compliance date that is specified for your source in § 63.2133.

§ 63.2161 What performance tests and other procedures must I use if I monitor brew ethanol?

(a) You must conduct each performance test in Table 2 to this subpart that applies to you.

(b) Each performance test must be conducted according to the requirements in § 63.7(e)(1) and under the specific conditions that this subpart specifies in Table 2 to this subpart and in paragraphs (b)(1) through (4) of this section.

(1) Conduct each performance test simultaneously with brew ethanol monitoring to establish a brew-to-exhaust correlation equation as specified in paragraph (f) of this section.

(2) For each fermentation stage, conduct one run of the EPA Test Method 25A of 40 CFR part 60, appendix A, over the entire length of a batch. The three fermentation stages do not have to be from the same production run.

(3) Do the test at a point in the exhaust-gas stream before you inject any dilution air, which is any air not needed to control fermentation.

(4) Record the results of the test for each fermentation stage.

(c) You may not conduct performance tests during periods of startup, shutdown, or malfunction, as specified in § 63.7(e)(1).

(d) You must collect data to correlate the brew ethanol concentration measured by the continuous emission monitoring system (CEMS) to the VOC concentration in the fermenter exhaust according to paragraphs (d)(1) through (3) of this section.

(1) You must collect a separate set of brew ethanol concentration data for each fed-batch fermentation stage while manufacturing the product that comprises the largest percentage (by mass) of average annual production.

(2) Measure brew ethanol as specified in § 63.2164 simultaneously with conducting a performance test for VOC in fermenter exhaust as specified in paragraph (b) of this section. You must measure brew ethanol at least once during each successive 30-minute period over the entire period of the performance test for VOC in fermenter exhaust.

(3) Keep a record of the brew ethanol concentration data for each fermentation stage over the period of EPA Test Method 25A of 40 CFR part 60, appendix A, performance test when the VOC concentration in the fermenter exhaust does not exceed the applicable emission limitation in Table 1 to this subpart.

(e) For each set of data that you collected under paragraph (d) of this section, perform a linear regression of brew ethanol concentration (percent) on VOC fermenter exhaust concentration (parts per million by volume (ppmv) measured as propane). The correlation between the brew ethanol concentration as measured by the CEMS and the VOC fermenter exhaust concentration as measured by EPA Test Method 25A of 40 CFR part 60, appendix

A, must be linear with a correlation coefficient of at least 0.90.

(f) Calculate the VOC concentration in the fermenter exhaust using the brew ethanol concentration data collected under paragraph (d) of this section and according to Equation 1 of this section.

$$BAVOC = BAE * CF + y \quad \text{(Eq. 1)}$$

Where:

BAVOC = batch-average concentration of VOC in fermenter exhaust (ppmv measured as propane), calculated for compliance demonstration

BAE = batch-average concentration of brew ethanol in fermenter liquid (percent), measured by CEMS

CF = constant established at performance test and representing the slope of the regression line

y = constant established at performance test and representing the y-intercept of the regression line

§63.2162 When must I conduct subsequent performance tests?

(a) For each emission limitation in Table 1 to this subpart for which compliance is demonstrated by monitoring brew ethanol concentration and calculating VOC concentration in the fermenter exhaust according to the procedures in §63.2161, you must conduct an EPA Test Method 25A of 40 CFR part 60, appendix A, performance test and establish a brew-to-exhaust correlation according to the procedures in Table 2 to this subpart and in §63.2161, at least once every year.

(b) The first subsequent performance test must be conducted no later than 365 calendar days after the initial performance test conducted according to §63.2160. Each subsequent performance test must be conducted no later than 365 calendar days after the previous performance test. You must conduct a performance test for each 365 calendar day period for the lifetime of the affected source.

§63.2163 If I monitor fermenter exhaust, what are my monitoring installation, operation, and maintenance requirements?

(a) Each CEMS must be installed, operated, and maintained according to the applicable Performance Specification (PS) of 40 CFR part 60, appendix B.

(b) You must conduct a performance evaluation of each CEMS according to the requirements in §63.8, according to the applicable Performance Specification of 40 CFR part 60, appendix B, and according to paragraphs (b)(1) through (4) of this section.

(1) If your CEMS monitor generates a single combined response value for VOC (examples of such detection principles are flame ionization, photoionization, and non-dispersive infrared absorption), but it is not a flame ionization analyzer, you must use PS 8 to show that your CEMS is operating properly.

(i) Use EPA Test Method 25A of 40 CFR part 60, appendix A, to do the relative-accuracy test PS 8 requires.

(ii) Calibrate the reference method with propane.

(iii) Collect a 1-hour sample for each reference-method test.

(2) If you continuously monitor VOC emissions using a flame ionization analyzer, then you must conduct the calibration drift test PS 8 requires, but you are not required to conduct the relative-accuracy test PS 8 requires.

(3) If you continuously monitor VOC emissions using gas chromatography, you must use PS 9 of CFR part 60, appendix B, to show that your CEMS is operating properly.

(4) You must complete the performance evaluation and submit the performance evaluation report before the compliance date that is specified for your source in §63.2133.

(c) Calibrate the CEMS with propane.

(d) Set the CEMS span at not greater than 5 times the relevant emission limit, with 1.5 to 2.5 times the relevant emission limit being the range considered by us to be generally optimum.

(e) You must monitor VOC concentration in fermenter exhaust at any point prior to dilution of the exhaust stream.

(f) Each CEMS must complete a minimum of one cycle of operation (sampling, analyzing, and data recording) for each successive 30-minute period within each batch monitoring period. Except as specified in paragraph (g) of this section, you must have a minimum of two cycles of operation in a 1-hour period to have a valid hour of data.

(g) The CEMS data must be reduced to arithmetic batch averages computed from two or more data points over each 1-hour period, except during periods when calibration, quality assurance, or maintenance activities pursuant to provisions of this part are being performed. During these periods, a valid hour of data shall consist of at least one data point representing a 30-minute period.

(h) You must have valid CEMS data from at least 75 percent of the full hours over the entire batch monitoring period.

(i) For each CEMS, record the results of each inspection, calibration, and validation check.

(j) You must check the zero (low-level) and high-level calibration drifts for each CEMS in accordance with the applicable PS of 40 CFR part 60, appendix B. The zero (low-level) and high-level calibration drifts shall be adjusted, at a minimum, whenever the zero (low-level) drift exceeds 2 times the limits of the applicable PS. The calibration drift checks must be performed at least once daily except that they may be performed less frequently under the conditions of paragraphs (j)(1) through (3) of this section.

(1) If a 24-hour calibration drift check for your CEMS is performed immediately prior to, or at the start of, a batch monitoring period of a duration exceeding 24 hours, you are not required to perform 24-hour-interval calibration drift checks during that batch monitoring period.

(2) If the 24-hour calibration drift exceeds 2.5 percent of the span value (or more than 10 percent of the calibration gas value if your CEMS is a gas chromatograph (GC)) in fewer than 5 percent of the checks over a 1-month period, and the 24-hour calibration drift never exceeds 7.5 percent of the span value, then the frequency of calibration drift checks may be reduced to at least weekly (once every 7 days).

(3) If, during two consecutive weekly checks, the weekly calibration drift exceeds 5 percent of the span value (or more than 20 percent of the calibration gas value, if your CEMS is a GC), then a frequency of at least 24-hour interval calibration checks must be resumed until the 24-hour calibration checks meet the test of paragraph (j)(2) of this section.

(k) If your CEMS is out of control, you must take corrective action according to paragraphs (k)(1) through (3) of this section.

(1) Your CEMS is out of control if the zero (low-level) or high-level calibration drift exceeds 2 times the limits of the applicable PS.

(2) When the CEMS is out of control, take the necessary corrective action and repeat all necessary tests that indicate that the system is out of control. You must take corrective action and conduct retesting until the performance requirements are below the applicable limits.

(3) During the batch monitoring periods in which the CEMS is out of control, recorded data shall not be used in data averages and calculations, or to meet any data availability requirement established under this subpart. The beginning of the out-of-control period is the beginning of the first batch monitoring period that follows the most recent calibration drift check during which the system was within allowable performance limits. The end of the out-of-control period is the end of the last batch monitoring period before you have completed corrective action and successfully demonstrated that the system is within the allowable limits. If your successful demonstration that the system is within the allowable limits occurs during a batch monitoring period, then the out-of-control period ends at the end of that batch monitoring period. If the CEMS is out of control for any part of a particular batch monitoring period, it is out of control for the whole batch monitoring period.

§ 63.2164 If I monitor brew ethanol, what are my monitoring installation, operation, and maintenance requirements?

(a) Each CEMS must be installed, operated, and maintained according to manufacturer's specifications and the plan for malfunctions that you must develop and use according to § 63.6(e).

(b) Each CEMS must complete a minimum of one cycle of operation (sampling, analyzing, and data recording) for each successive 30-minute period

within each batch monitoring period. Except as specified in paragraph (c) of this section, you must have a minimum of two cycles of operation in a 1-hour period to have a valid hour of data.

(c) The CEMS data must be reduced to arithmetic batch averages computed from two or more data points over each 1-hour period, except during periods when calibration, quality assurance, or maintenance activities pursuant to provisions of this part are being performed. During these periods, a valid hour of data shall consist of at least one data point representing a 30-minute period.

(d) You must have valid CEMS data from at least 75 percent of the full hours over the entire batch monitoring period.

(e) Set the CEMS span to correspond to not greater than 5 times the relevant emission limit, with 1.5 to 2.5 times the relevant emission limit being the range considered by us to be generally optimum. Use the brew-to-exhaust correlation equation established under §63.2161(f) to determine the span value for your CEMS that corresponds to the relevant emission limit.

(f) For each CEMS, record the results of each inspection, calibration, and validation check.

(g) The GC that you use to calibrate your CEMS must meet the requirements of paragraphs (g)(1) through (3) of this section.

(1) Calibrate the GC at least daily, by analyzing standard solutions of ethanol in water (0.05 percent, 0.15 percent, and 0.3 percent).

(2) For use in calibrating the GC, prepare the standard solutions of ethanol using the procedures listed in paragraphs (g)(2)(i) through (vi) of this section.

(i) Starting with 100 percent ethanol, dry the ethanol by adding a small amount of anhydrous magnesium sulfate (granular) to 15–20 milliliters (ml) of ethanol.

(ii) Place approximately 50 ml of water into a 100-ml volumetric flask and place the flask on a balance. Tare the balance. Weigh 2.3670 grams of the dry (anhydrous) ethanol into the volumetric flask.

(iii) Add the 100-ml volumetric flask contents to a 1000-ml volumetric flask. Rinse the 100-ml volumetric flask with water into the 1000-ml flask. Bring the volume to 1000 ml with water.

(iv) Place an aliquot into a sample bottle labeled ''0.3% Ethanol.''

(v) Fill a 50-ml volumetric flask from the contents of the 1000-ml flask. Add the contents of the 50-ml volumetric flask to a 100-ml volumetric flask and rinse the 50-ml flask into the 100-ml flask with water. Bring the volume to 100 ml with water. Place the contents into a sample bottle labeled ''0.15% Ethanol.''

(vi) With a 10-ml volumetric pipette, add two 10.0-ml volumes of water to a sample bottle labeled ''0.05% Ethanol.'' With a 10.0-ml volumetric pipette, pipette 10.0 ml of the 0.15 percent ethanol solution into the sample bottle labeled ''0.05% Ethanol.''

(3) For use in calibrating the GC, dispense samples of the standard solutions of ethanol in water in aliquots to appropriately labeled and dated glass sample bottles fitted with caps having a Teflon® seal. Refrigerated samples may be kept unopened for 1 month. Prepare new calibration standards of ethanol in water at least monthly.

(h) Calibrate the CEMS according to paragraphs (h)(1) through (3) of this section.

(1) To calibrate the CEMS, inject a brew sample into a calibrated GC and compare the simultaneous ethanol value given by the CEMS to that given by the GC. Use either the Porapak® Q, 80–100 mesh, 6′ × ⅛′, stainless steel packed column or the DB Wax, 0.53 mm × 30 m capillary column.

(2) If a CEMS ethanol value differs by 20 percent or more from the corresponding GC ethanol value, determine the brew ethanol values throughout the rest of the batch monitoring period by injecting brew samples into the GC not less frequently than every 30 minutes. From the time at which the difference of 20 percent or more is detected until the batch monitoring period ends, the GC data will serve as the CEMS data.

(3) Perform a calibration of the CEMS at least four times per batch.

§ 63.2165 How do I demonstrate initial compliance with the emission limitations if I monitor fermenter exhaust?

(a) You must demonstrate initial compliance with each emission limitation that applies to you according to Table 3 to this subpart.

(b) You must submit the Notification of Compliance Status containing the results of the initial compliance demonstration according to the requirements in § 63.2180(e).

§ 63.2166 How do I demonstrate initial compliance with the emission limitations if I monitor brew ethanol?

(a) You must demonstrate initial compliance with each emission limitation that applies to you according to Table 3 to this subpart.

(b) You must establish the brew-to-exhaust correlation for each fermentation stage according to § 63.2161(e).

(c) You must submit the Notification of Compliance Status containing the results of the initial compliance demonstration according to the requirements in § 63.2180(e).

CONTINUOUS COMPLIANCE REQUIREMENTS

§ 63.2170 How do I monitor and collect data to demonstrate continuous compliance?

(a) You must monitor and collect data according to this section.

(b) Except for monitor malfunctions, associated repairs, and required quality assurance or control activities (including, as applicable, calibration checks and required zero and span adjustments), you must monitor continuously during each batch monitoring period.

(c) You may not use data recorded during monitoring malfunctions, associated repairs, and required quality assurance or quality control activities in data averages and calculations used to report emission or operating levels, or to fulfill a minimum data availability requirement. You must use all the data collected during all other periods in assessing the operation of the control system.

§ 63.2171 How do I demonstrate continuous compliance with the emission limitations?

(a) You must demonstrate continuous compliance with each emission limitation in Table 1 to this subpart that applies to you according to methods specified in Table 4 to this subpart.

(b) You must calculate the percentage of within-concentration batches (defined in § 63.2192) for each 12-month period according to paragraphs (b)(1) through (4) of this section.

(1) Determine the percentage of batches over a 12-month calculation period that were in compliance with the applicable maximum concentration. The total number of batches in the calculation period is the sum of the numbers of batches of each fermentation stage for which emission limits apply. To calculate the 12-month percentage, do not include batches in production during periods of malfunction. In counting the number of batches in the 12-month calculation period, include those batches for which the batch monitoring period ended on or after 12 a.m. on the first day of the period and exclude those batches for which the batch monitoring period did not end on or before 11:59 p.m. on the last day of the period.

(2) You must determine the 12-month percentage at the end of each calendar month.

(3) The first 12-month calculation period begins on the compliance date that is specified for your source in § 63.2133 and ends on the last day of the month that includes the date 365 days after your compliance date, unless the compliance date for your source is the first day of the month, in which case the first 12-month calculation period ends on the last day of the month that is 11 calendar months after the compliance date. (For example, if the compliance date for your source is October 15, 2003, the first 12-month calculation period would begin on October 15, 2003, and end on October 31, 2004. If the compliance date for your source is October 1, 2003, the first 12-month calculation period would begin on October 1, 2003, and end on September 30, 2004.)

(4) The second 12-month calculation period and each subsequent 12-month calculation period begin on the first

day of the month following the first full month of the previous 12-month averaging period and end on the last day of the month 11 calendar months later. (For example, if the compliance date for your source is October 15, 2003, the second calculation period would begin on December 1, 2003 and end on November 30, 2004.)

(c) You must report each instance (that is, each 12-month calculation period) in which you did not meet each emission requirement in Table 4 to this subpart that applies to you. (Failure of a single batch to meet a concentration limit does not in and of itself constitute a failure to meet the emission limitation.) Each instance in which you failed to meet each applicable emission limitation is reported as part of the requirements in §63.2181.

(d) During periods of malfunction, you must operate in accordance with the malfunction plan.

NOTIFICATION, REPORTS, AND RECORDS

§63.2180 What notifications must I submit and when?

(a) You must submit all of the notifications in §§63.7(b) and (c), 63.8(e), (f)(4) and (6), and 63.9(b) through (h) that apply to you by the dates specified.

(b) If you start up your affected source before May 21, 2001, you are not subject to the initial notification requirements of §63.9(b)(2).

(c) If you are required to conduct a performance test as specified in Table 2 to this subpart, you must submit a notification of intent to conduct a performance test at least 60 calendar days before the performance test is scheduled to begin as required in §63.7(b)(1).

(d) If you are required to conduct a performance evaluation as specified in §63.2163(b), you must submit a notification of the date of the performance evaluation at least 60 days prior to the date the performance evaluation is scheduled to begin as required in §63.8(e)(2).

(e) If you are required to conduct a performance test or other initial compliance demonstration as specified in Table 2 or 3 to this subpart, you must submit a Notification of Compliance Status according to §63.9(h)(2)(ii) and according to paragraphs (e)(1) through (2) of this section.

(1) For each initial compliance demonstration required in Table 3 to this subpart that does not include a performance test, you must submit the Notification of Compliance Status no later than July 31 or January 31, whichever date follows the end of the first 12 calendar months after the compliance date that is specified for your source in §63.2133. If your initial compliance demonstration does not include a performance test, the first compliance report, described in §63.2181(b)(1), serves as the Notice of Compliance Status.

(2) For each initial compliance demonstration required in Table 2 or 3 to this subpart that includes a performance test conducted according to the requirements in Table 2, you must submit the Notification of Compliance Status, including the performance test results, before the close of business on the 60th calendar day following the completion of the performance test according to §63.10(d)(2).

§63.2181 What reports must I submit and when?

(a) You must submit each report in Table 5 to this subpart that applies to you.

(b) Unless the Administrator has approved a different schedule for submission of reports under §63.10(a), you must submit each report by the date in Table 5 to this subpart and according to paragraphs (b)(1) through (5) of this section.

(1) The first compliance report must cover the period beginning on the compliance date that is specified for your affected source in §63.2133 and ending on either June 30 or December 31 (use whichever date is the first date following the end of the first 12 calendar months after the compliance date that is specified for your source in §63.2133). The first compliance report must include the percentage of within-concentration batches, as described in §63.2171(b), for the first 12-month calculation period described in §63.2171(b)(3). It must also include a percentage for each subsequent 12-month calculation period, as described in §63.2171(b)(4), ending on a calendar

month that falls within the first compliance period. (For example, if the compliance date for your source is October 15, 2003, the first compliance report would cover the period from October 15, 2003 to December 31, 2004. It would contain percentages for the 12-month periods ending October 31, 2004; November 30, 2004; and December 31, 2004.)

(2) The first compliance report must be postmarked or delivered no later than July 31 or January 31, whichever date follows the end of the first 12 calendar months after the compliance date that is specified for your affected source in § 63.2133.

(3) Each subsequent compliance report must cover the semiannual reporting period from January 1 through June 30 or the semiannual reporting period from July 1 through December 31. Each subsequent compliance report must include the percentage of within-concentration batches for each 12-month calculation period ending on a calendar month that falls within the reporting period. (For example, if the compliance date for your source is October 15, 2003, the second compliance report would cover the period from January 1, 2005 through June 30, 2005. It would contain percentages for the 12-month periods ending January 31, 2005; February 28, 2005; March 31, 2005; April 30, 2005; May 31, 2005; and June 30, 2005.)

(4) Each subsequent compliance report must be postmarked or delivered no later than July 31 or January 31, whichever date is the first date following the end of the semiannual reporting period.

(5) For each affected source that is subject to permitting regulations pursuant to 40 CFR part 70 or part 71, and if the permitting authority has established dates for submitting semiannual reports pursuant to 40 CFR 70.6(a)(3)(a)(iii)(A) or 40 CFR 71.6(a)(3)(a)(iii)(A), you may submit the first and subsequent compliance reports according to the dates the permitting authority has established instead of according to the dates in paragraphs (b)(1) through (4) of this section.

(c) The compliance report must contain the information listed in paragraphs (c)(1) through (5) of this section.

(1) Company name and address.

(2) Statement by a responsible official with that official's name, title, and signature, certifying the accuracy of the content of the report.

(3) Date of report and beginning and ending dates of the reporting period.

(4) Percentage of batches that are within-concentration batches for each 12-month period ending on a calendar month that falls within the reporting period.

(5) If you had a malfunction during the reporting period and you took actions consistent with your malfunction plan, the compliance report must include the information in § 63.10(d)(5)(i) for each malfunction.

§ 63.2182 What records must I keep?

(a) You must keep the records listed in paragraphs (a)(1) through (4) of this section. These include:

(1) A copy of each notification and report that you submitted to comply with this subpart, including all documentation supporting any Notification of Compliance Status and compliance report that you submitted, according to the requirements in § 63.10(b)(2)(xiv).

(2) The records in § 63.6(e)(3)(iii) through (v) related to malfunction;

(3) Records of performance tests and performance evaluations as required in § 63.10(b)(2)(viii); and

(4) Records of results of brew-to-exhaust correlation tests specified in § 63.2161.

(b) For each CEMS, you must keep the records listed in paragraphs (b)(1) through (9) of this section. These include:

(1) Records described in § 63.10(b)(2)(vi);

(2) All required measurements needed to demonstrate compliance with a relevant standard (including, but not limited to, 30-minute averages of CEMS data, raw performance testing measurements, and raw performance evaluation measurements, that support data that the source is required to report);

(3) Records described in § 63.10(b)(2)(viii) through (xi). The CEMS system must allow the amount of excess zero (low-level) and high-level calibration drift measured at the interval checks to be quantified and recorded;

(4) All required CEMS measurements (including monitoring data recorded during unavoidable CEMS breakdowns and out-of-control periods);

(5) Identification of each batch during which the CEMS was inoperative, except for zero (low-level) and high-level checks;

(6) Identification of each batch during which the CEMS was out of control, as defined in § 63.2163(k);

(7) Previous (i.e., superseded) versions of the performance evaluation plan as required in § 63.8(d)(3);

(8) Request for alternatives to relative accuracy test for CEMS as required in § 63.8(f)(6)(i); and

(9) Records of each batch for which the batch-average VOC concentration exceeded the applicable maximum VOC concentration in Table 1 to this subpart and whether the batch was in production during a period of malfunction or during another period.

(c) You must keep the records required in Table 4 to this subpart to show continuous compliance with each emission limitation that applies to you.

(d) You must also keep the records listed in paragraphs (d)(1) through (3) of this section for each batch in your affected source.

(1) Unique batch identification number.

(2) Fermentation stage for which you are using the fermenter.

(3) Unique CEMS equipment identification number.

§ 63.2183 In what form and how long must I keep my records?

(a) Your records must be in a form suitable and readily available for expeditious review, according to § 63.10(b)(1).

(b) As specified in § 63.10(b)(1), you must keep each record for 5 years following the date of each occurrence, measurement, maintenance, corrective action, report, or record.

(c) You must keep each record on site for at least 2 years after the date of each occurrence, measurement, maintenance, corrective action, report, or record, according to § 63.10(b)(1). You can keep the records offsite for the remaining 3 years.

OTHER REQUIREMENTS AND INFORMATION

§ 63.2190 What parts of the General Provisions apply to me?

Table 6 to this subpart shows which parts of the General Provisions in §§ 63.1 through 63.13 apply to you.

§ 63.2191 Who implements and enforces this subpart?

(a) This subpart can be implemented and enforced by us, the U.S. EPA, or a delegated authority such as your State, local, or tribal agency. If the U.S. EPA Administrator has delegated authority to your State, local, or tribal agency, then that agency has the authority to implement and enforce this subpart. You should contact your U.S. EPA Regional Office to find out if this subpart is delegated to your State, local, or tribal agency.

(b) In delegating implementation and enforcement authority of this subpart to a State, local, or tribal agency under 40 CFR part 63, subpart E, the authorities contained in paragraph (c) of this section are retained by the Administrator of the U.S. EPA and are not transferred to the State, local, or tribal agency.

(c) The authorities that will not be delegated to State, local, or tribal agencies are as listed in paragraphs (c)(1) through (4) of this section.

(1) Approval of alternatives to the non-opacity emission limitations in § 63.2140 under § 63.6(g).

(2) Approval of major alternatives to test methods under § 63.7(e)(2)(ii) and (f) and as defined in § 63.90.

(3) Approval of major alternatives to monitoring under § 63.8(f) and as defined in § 63.90.

(4) Approval of major alternatives to recordkeeping and reporting under § 63.10(f) and as defined in § 63.90.

§ 63.2192 What definitions apply to this subpart?

Terms used in this subpart are defined in the Clean Air Act, in 40 CFR 63.2, the General Provisions of this part, and in this section as follows:

Batch means a single fermentation cycle in a single fermentation vessel (fermenter).

Batch monitoring period means the period that begins at the later of either

the start of aeration or the addition of yeast to the fermenter; the period ends at the earlier of either the end of aeration or the point at which the yeast has begun being emptied from the fermenter.

Brew means the mixture of yeast and additives in the fermenter.

Brew ethanol means the ethanol in fermenter liquid.

Brew ethanol monitor means the monitoring system that you use to measure brew ethanol to demonstrate compliance with this subpart. The monitoring system includes a resistance element used as an ethanol sensor, with the measured resistance proportional to the concentration of ethanol in the brew.

Brew-to-exhaust correlation means the correlation between the concentration of ethanol in the brew and the concentration of VOC in the fermenter exhaust. This correlation is specific to each fed-batch fermentation stage and is established while manufacturing the product that comprises the largest percentage (by mass) of average annual production.

Emission limitation means any emission limit or operating limit.

Fed-batch means the yeast is fed carbohydrates and additives during fermentation in the vessel. In contrast, carbohydrates and additives are added to ''set-batch'' fermenters only at the start of the batch.

1-hour period means any 60-minute period commencing on the minute at which the batch monitoring period begins.

Product means the yeast resulting from the final stage in a production run. Products are distinguished by yeast species, strain, and variety.

Responsible official means responsible official as defined in 40 CFR 70.2.

Specialty yeast includes but is not limited to yeast produced for use in wine, champagne, whiskey, and beer.

Within-concentration batch means a batch for which the average VOC concentration is not higher than the maximum concentration that is allowed as part of the applicable emission limitation.

TABLES

As stated in § 63.2140, you must comply with the emission limitations in the following table:

TABLE 1 TO SUBPART CCCC.—EMISSION LIMITATIONS

For each fed-batch fermenter producing yeast in the following fermentation stage . . .	You must meet the following emission limitation . . .
Last stage (Trade); or Second-to-last stage (First Generation); or Third-to-last stage (Stock).	a. For at least 98 percent of all batches (sum of batches from last, second-to-last, and third-to-last stages) in each 12-month calculation period described in § 63.2171(b), the VOC concentration in the fermenter exhaust does not exceed the applicable maximum concentration (100 ppmv for last stage, 200 ppmv for second-to-last stage, or 300 ppmv for third-to-last stage), measured as propane, and averaged over the duration of a batch. b. The emission limitation does not apply during the production of specialty yeast.

As stated in § 63.2161, if you demonstrate compliance by monitoring brew ethanol, you must comply with the requirements for performance tests in the following table:

TABLE 2 TO SUBPART CCCC.—REQUIREMENTS FOR PERFORMANCE TESTS

[Brew Ethanol Monitoring Only]

For each fed-batch fermenter for which compliance is determined by monitoring brew ethanol concentration and calculating VOC concentration in the fermenter exhaust according to the procedures in §63.2161, you must . . .	Using . . .	According to the following requirements . . .
1. Measure VOC as propane	Method 25A*, or an alternative validated by EPA Method in the 301* and approved by the Administrator.	You must measure the VOC concentration in the fermenter exhaust at any point prior to dilution of the exhaust stream.
2. Select the sampling port's location and the number of traverse points.	Method 1*	
3. Measure volumetric flow rate.	Method 2*	
4. Perform gas analysis to determine the dry molecular weight of the stack gas.	Method 3*	
5. Determine moisture content of the stack gas.	Method 4*	

*EPA Test Methods found in appendix A of 40 CFR part 60.

As stated in §63.2165 (if you monitor fermenter exhaust) and §63.2166 (if you monitor brew ethanol), you must comply with the requirements to demonstrate initial compliance with the applicable emission limitations in the following table:

TABLE 3 TO SUBPART CCCC.—INITIAL COMPLIANCE WITH EMISSION LIMITATIONS

For . . .	For the following emission limitation . . .	You have demonstrated initial compliance if . . .
1. Each fed-batch fermenter producing yeast in a fermentation stage (last Trade), second-to-last (First Generation), or third-to-last (Stock)) for which compliance is determined by monitoring VOC concentration in the fermenter exhaust.	The VOC concentration in the fermenter exhaust, averaged over the duration of the batch, does not exceed the applicable maximum concentration (100 ppmv for last stage, 200 ppmv for second-to-last stage, or 300 ppmv for third-to-last stage), measured as propane..	a. You reduce the CEMS data batch averages according to §63.2163(g). b. The average VOC concentration in the fermenter exhaust for at least 98 percent of the batches (sum of batches from last, second-to-last, and third-to-last stages) during the initial compliance period described in §63.2160(a) does not exceed the applicable maximum concentration.
2. Each fed-batch fermenter producing yeast in a fermentation stage (last (Trade), second-to-last (First Generation), or third-to-last (Stock)) for which compliance is determined by monitoring brew ethanol concentration and calculating VOC concentration in the fermenter exhaust according to the procedures in §63.2161.	The VOC concentration in the fermenter exhaust, averaged over the duration of the batch, does not exceed the applicable maximum concentration (100 ppmv for last stage, 2000 ppmv for second-to-last stage, or 300 ppmv for third-to-last stage), measured as propane.	a. The VOC fermenter exhaust concentration over the period of the Method 25A* performance test does not exceed the applicable maximum concentration. b. You have a record of the brew-to-exhaust correlation during the Method 25A* performance test during which the VOC fermenter exhaust concentration did not exceed the applicable maximum concentration.

*EPA Test Method in appendix A of 40 CFR part 60.

As stated in §63.2171, you must comply with the requirements to demonstrate continuous compliance with the applicable emission limitations in the following table:

TABLE 4 TO SUBPART CCCC.—CONTINUOUS COMPLIANCE WITH EMISSION LIMITATIONS

For . . .	For the following emission limitation . . .	You must demonstrate continuous compliance by . . .
1. Each fed-batch fermenter producing yeast in a fermentation stage (last (Trade), second-to-last (First Generation), or third-to-last (Stock)) for which compliance is determined by monitoring VOC concentration in the fermenter exhaust.	For at least 98 percent of all batches (sum of batches from last, second-to-last, and third-to-last stages) in each 12-month calculation period described in § 63.2171(b), the VOC concentration in the fermenter exhaust, averaged over the duration of the batch, does not exceed the applicable maximum concentration (100 ppmv for last stage, 200 ppmv for second-to-last stage, or 300 ppmv for third-to-last stage), measured as propane.	a. Collecting the monitoring data according to § 63.2163(f). b. Reducing the data according to § 63.2163(g). c. For at least 98 percent of the batches (sum of batches from last, second-to-last, and third-to-last stages) for each 12-month period ending within a semi-annual reporting period described in § 63.2181(b)(3), the batch average VOC concentration in the fermenter exhaust does not exceed the applicable maximum concentration.
2. Each fed-batch fermenter producing yeast in a fermentation stage (last (Trade), second-to-last (First Generation), or third-to-last (Stock)) for which compliance is determined by monitoring brew ethanol concentration and calculating VOC concentration in the fermenter exhaust according to the procedures in § 63.2161.	.For at least 98 percent of all batches (sum of batches from last, second-to-last, and third-to-last stages) in each 12-month calculation period described in § 63.2171(b), the VOC concentration in the fermenter exhaust, averaged over the duration of the batch, does not exceed the applicable maximum concentration (100 ppmvc for last stage, 200 ppmv for second-to-last stage, or 300 ppmv for third-to-last stage), measured as propane.	a. Collecting the monitoring data according to § 63.2164(b). b. Reducing the data according to § 63.2164(c). c. For at least 98 percent of the batches (sum of batches from last, second-to-last, and third-to-last stages) for each 12-month period ending within a semi-annual reporting period described in § 63.2181(b)(3), the batch average VOC concentration in the fermenter exhaust does not exceed the applicable maximum concentration.

As stated in § 63.2181, you must submit a compliance report that contains the information in § 63.2181(c) as well as the information in the following table; you must also submit malfunction reports according to the requirements in the following table:

TABLE 5 TO SUBPART CCCC.—REQUIREMENTS FOR REPORTS

You must submit a(n)	The report must contain . . .	You must submit the report . . .
1. Compliance report	a. Your calculated percentage of within-concentration batches, as described in § 63.2171(b), for 12-month calculation periods ending on each calendar month that falls within the reporting period.	Semiannually according to the requirements in § 63.2181(b).
	b. If you had a malfunction during the reporting period and you took actions consistent with your malfunction plan, the compliance report must include the information in § 63.10(d)(5)(i).	Semiannually according to the requirements in § 63.2181(b).
2. Immediate malfunction report if you had a malfunction during the reporting period that is not consistent with your malfunction plan.	a. Actions taken for the event	By fax or telephone within 2 working days after starting actions inconsistent with the plan.
	b. The information in § 63.10(d)(5)(ii)	By letter within 7 working days after the end of the event unless you have made alternative arrangements with the permitting authority (§ 63.10(d)(5)(ii)).

As stated in § 63.2190, you must comply with the applicable General Provisions requirements according to the following table:

TABLE 6 TO SUBPART CCCC.—APPLICABILITY OF GENERAL PROVISIONS TO SUBPART CCCC

Citation	Subject	Applicable to subpart CCCC?
§ 63.1	Applicability	Yes.

TABLE 6 TO SUBPART CCCC.—APPLICABILITY OF GENERAL PROVISIONS TO SUBPART CCCC—Continued

Citation	Subject	Applicable to subpart CCCC?
§63.2	Definitions	Yes.
§63.3	Units and Abbreviations	Yes.
§63.4	Prohibited Activities and Circumvention	Yes.
§63.5	Construction and Reconstruction	Yes.
§63.6	Compliance With Standards and Maintenance Requirements.	1. For §63.6(e) and (f), requirements for startup, shutdown, and malfunctions apply only to malfunctions. 2. §63.6(h) does not apply. 3. Otherwise, all apply.
§63.7	Performance Testing Requirements	1. §63.7(a)(1)–(2) and (e)(3) do not apply, instead specified in this subpart. 2. Otherwise, all apply.
§63.8	Monitoring Requirements	1. §63.8(a)(2) is modified by §63.2163. 2. §63.8(a)(4) does not apply. 3. For §63.8(c)(1), requirements for startup, shutdown, and malfunctions apply only to malfunctions, and no report pursuant to §63.10(d)(5)(i) is required. 4. For §63.8(d), requirements for startup, shutdown, and malfunctions apply only to malfunctions. 5. §63.8(c)(4)(i), (c)(5), (e)(5)(ii), and (g)(5), do not apply. 6. §63.8(c)(4)(ii), (c)(6)–(8), (e)(4), and (g)(1)–(4) do not apply, instead specified in this subpart. 7. Otherwise, all apply.
§63.9	Notification Requirements	1. §63.9(b)(2) does not apply because rule omits requirements for initial notification for sources that start up prior to May 21, 2001 2. §63.9(f) does not apply. 3. Otherwise, all apply.
§63.10	Recordkeeping and Reporting Requirements	1. For §63.10(b)(2)(i)–(v), (c)(9)–(15), and (d)(5), requirements for startup, shutdown, and malfunctions apply only to malfunctions. 2. §63.10(b)(2)(vii) and (c)(1)–(6) do not apply, instead specified in this subpart. 3. §63.10(c)(7)–(8), (d)(3), (e)(2)(ii)–(4), (e)(3)–(4) do not apply. 4. Otherwise, all apply.
§63.11	Flares	No.
§63.12	Delegation	Yes.
§63.13	Addresses	Yes.
§63.14	Incorporation by Reference	Yes.
§63.15	Availability of Information	Yes.

Subpart GGGG—National Emission Standards for Hazardous Air Pollutants: Solvent Extraction for Vegetable Oil Production

SOURCE: 66 FR 19011, Apr. 12, 2001, unless otherwise noted.

WHAT THIS SUBPART COVERS

§63.2830 What is the purpose of this subpart?

This subpart establishes national emission standards for hazardous air pollutants (NESHAP) for emissions during vegetable oil production. This subpart limits hazardous air pollutant (HAP) emissions from specified vegetable oil production processes. This subpart also establishes requirements to demonstrate initial and continuous compliance with the emission standards.

§63.2831 Where can I find definitions of key words used in this subpart?

You can find definitions of key words used in this subpart in §63.2872.

§63.2832 Am I subject to this subpart?

(a) You are an affected source subject to this subpart if you meet all of the criteria listed in paragraphs (a)(1) and (2) of this section:

(1) You own or operate a vegetable oil production process that is a major source of HAP emissions or is collocated within a plant site with other sources that are individually or collectively a major source of HAP emissions.

(i) A *vegetable oil production process* is defined in § 63.2872. In general, it is the collection of continuous process equipment and activities that produce crude vegetable oil and meal products by removing oil from oilseeds listed in Table 1 to § 63.2840 through direct contact with an organic solvent, such as a hexane isomer blend.

(ii) A major source of HAP emissions is a plant site that emits or has the potential to emit any single HAP at a rate of 10 tons (9.07 megagrams) or more per year or any combination of HAP at a rate of 25 tons (22.68 megagrams) or more per year.

(2) Your vegetable oil production process processes any combination of eight types of oilseeds listed in paragraphs (a)(2)(i) through (viii) of this section:

(i) Corn germ;

(ii) Cottonseed;

(iii) Flax;

(iv) Peanut;

(v) Rapeseed (for example, canola);

(vi) Safflower;

(vii) Soybean; and

(viii) Sunflower.

(b) You are not subject to this subpart if your vegetable oil production process meets any of the criteria listed in paragraphs (b)(1) through (4) of this section:

(1) It uses only mechanical extraction techniques that use no organic solvent to remove oil from a listed oilseed.

(2) It uses only batch solvent extraction and batch desolventizing equipment.

(3) It processes only agricultural products that are not listed oilseeds as defined in § 63.2872.

(4) It functions only as a research and development facility and is not a major source.

(c) As listed in § 63.1(c)(5) of the General Provisions, if your HAP emissions increase such that you become a major source, then you are subject to all of the requirements of this subpart.

§ 63.2833 Is my source categorized as existing or new?

(a) This subpart applies to each existing and new affected source. You must categorize your vegetable oil production process as either an existing or a new source in accordance with the criteria in Table 1 of this section, as follows:

TABLE 1 TO § 63.2833.—CATEGORIZING YOUR SOURCE AS EXISTING OR NEW

If your affected source...	And if...	Then your affected source...
(1) was constructed or began construction before May 26, 2000.	reconstruction has not occurred	is an existing source.
(2) began reconstruction, as defined in § 63.2, on or after May 26, 2000.	(i) reconstruction was part of a scheduled plan to comply with the existing source requirements of this subpart; and. (ii) reconstruction was completed no later than 3 years after the effective date of this subpart.	remains an existing source.
(3) began a significant modification, as defined in § 63.2872, at any time on an existing source.	the modification does not constitute reconstruction.	remains an existing source.
(4) began a significant modification, as defined in § 63.2872, at any time on a new source.	the modification does not constitute reconstruction.	remains a new source.
(5) began reconstruction on or after May 26, 2000.	reconstruction was completed later than 3 years after the effective date of this subpart.	is a new source
(6) began construction on or after May 26, 2000.	.....	is a new source.

(b) *Reconstruction of a source*. Any affected source is reconstructed if components are replaced so that the criteria in the definition of *reconstruction*

in § 63.2 are satisfied. In general, a vegetable oil production process is reconstructed if the fixed capital cost of the new components exceeds 50 percent of the fixed capital cost for constructing a new vegetable oil production process, and it is technically and economically feasible for the reconstructed source to meet the relevant new source requirements of this subpart. The effect of reconstruction on the categorization of your existing and new affected source is described in paragraphs (b)(1) and (2) of this section:

(1) After reconstruction of an existing source, the affected source is recategorized as a new source and becomes subject to the new source requirements of this subpart.

(2) After reconstruction of a new source, the affected source remains categorized as a new source and remains subject to the new source requirements of this subpart.

(c) *Significant modification of a source.* A significant modification to an affected source is a term specific to this subpart and is defined in § 63.2872.

(1) In general, a significant modification to your source consists of adding new equipment or the modification of existing equipment within the affected source that significantly affects solvent losses from the affected source. Examples include adding or replacing extractors, desolventizer-toasters (conventional and specialty), and meal dryer-coolers. All other significant modifications must meet the criteria listed in paragraphs (c)(1)(i) and (ii) of this section:

(i) The fixed capital cost of the modification represents a significant percentage of the fixed capital cost of building a comparable new vegetable oil production process.

(ii) It does not constitute reconstruction as defined in § 63.2.

(2) A significant modification has no effect on the categorization of your source as existing and new. An existing source remains categorized as an existing source and subject to the existing source requirements of this subpart. A new source remains categorized as a new source and subject to the new source requirements of this subpart.

(d) Changes in the type of oilseed processed by your affected source does not affect the categorization of your source as new or existing. Recategorizing an affected source from existing to new occurs only when you add or modify process equipment within the source which meets the definition of *reconstruction*.

§ 63.2834 When do I have to comply with the standards in this subpart?

You must comply with this subpart in accordance with one of the schedules in Table 1 of this section, as follows:

TABLE 1 OF § 63.2834.—COMPLIANCE DATES FOR EXISTING AND NEW SOURCES

If your affected source is categorized as...	And if...	Then your compliance date is...
(a) an existing source		3 years after the effective date of this subpart.
(b) a new source	you startup your affected source before the effective date of this subpart.	the effective date of this subpart.
(c) a new source	you startup your affected source on or after the effective date of this subpart.	your startup date.

STANDARDS

§ 63.2840 What emission requirements must I meet?

(a)(1) The emission requirements limit the number of gallons of HAP lost per ton of listed oilseeds processed. For each operating month, you must calculate a compliance ratio which compares your actual HAP loss to your allowable HAP loss for the previous 12 operating months as shown in Equation 1 of this section. An operating month, as defined in § 63.2872, is any calendar month in which a source processes a listed oilseed, excluding any entire calendar month in which the source operated under an initial startup period subject to § 63.2850(c)(2) or (d)(2) or a malfunction period subject to § 63.2850(e)(2). Equation 1 of this section follows:

$$\text{Compliance Ratio} = \frac{\text{Actual Hap Loss}}{\text{Allowable Hap Loss}} \qquad \text{(Eq. 1)}$$

(2) Equation 1 of this section can also be expressed as a function of total solvent loss as shown in Equation 2 of this section. Equation 2 of this section follows:

$$\text{Compliance Ratio} = \frac{f * \text{Actual Solvent Loss}}{0.64 * \sum_{i=1}^{n}\left((\text{Oilseed})_i * (\text{SLF})_i\right)} \qquad \text{(Eq. 2)}$$

Where:

f = The weighted average volume fraction of HAP in solvent received during the previous 12 operating months, as determined in § 63.2854, dimensionless.

0.64 = The average volume fraction of HAP in solvent in the baseline performance data, dimensionless.

Actual Solvent Loss = Gallons of actual solvent loss during previous 12 operating months, as determined in § 63.2853.

Oilseed = Tons of each oilseed type ''i'' processed during the previous 12 operating months, as shown in § 63.2855.

SLF = The corresponding solvent loss factor (gal/ton) for oilseed ''i'' listed in Table 1 of this section, as follows:

TABLE 1 OF § 63.2840.—OILSEED SOLVENT LOSS FACTORS FOR DETERMINING ALLOWABLE HAP LOSS

Type of oilseed process	A source that...	Oilseed solvent loss factor (gal/ton)	
		Existing sources	New sources
(i) Corn Germ, Wet Milling	processes corn germ that has been separated from other corn components using a ''wet'' process of centrifuging a slurry steeped in a dilute sulfurous acid solution.	0.4	0.3
(ii) Corn Germ, Dry Milling	processes corn germ that has been separated from the other corn components using a ''dry'' process of mechanical chafing and air sifting.	0.7	0.7
(iii) Cottonseed, Large	processes 120,000 tons or more of a combination of cottonseed and other listed oilseeds during all normal operating periods in a 12 operating month period.	0.5	0.4
(iv) Cottonseed, Small	processes less than 120,000 tons of a combination of cottonseed and other listed oilseeds during all normal operating periods in a 12 operating month period.	0.7	0.4
(v) Flax	processes flax	0.6	0.6
(vi) Peanuts	processes peanuts	1.2	0.7
(vii) Rapeseed	processes rapeseed	0.7	0.3
(viii) Safflower	processes safflower	0.7	0.7
(ix) Soybean, Conventional	uses a conventional style desolventizer to produce crude soybean oil products and soybean animal feed products.	0.2	0.2
(x) Soybean, Specialty	uses a special style desolventizer to produce soybean meal products for human and animal consumption.	1.7	1.5

TABLE 1 OF §63.2840.—OILSEED SOLVENT LOSS FACTORS FOR DETERMINING ALLOWABLE HAP LOSS—Continued

Type of oilseed process	A source that...	Oilseed solvent loss factor (gal/ton)	
		Existing sources	New sources
(xi) Soybean, Combination Plant with Low Specialty Production.	processes soybeans in both specialty and conventional desolventizers and the quantity of soybeans processed in specialty desolventizers during normal operating periods is less than 3.3 percent of total soybeans processed during all normal operating periods in a 12 operating month period. The corresponding solvent loss factor is an overall value and applies to the total quantity of soybeans processed..	0.25	0.25
(xii) Sunflower	processes sunflower	0.4	0.3

(b) When your source has processed listed oilseed for 12 operating months, calculate the compliance ratio by the end of each calendar month following an operating month using Equation 2 of this section. When calculating your compliance ratio, consider the conditions and exclusions in paragraphs (b)(1) through (6) of this section:

(1) If your source processes any quantity of listed oilseeds in a calendar month and the source is not operating under an initial startup period or malfunction period subject to §63.2850, then you must categorize the month as an operating month, as defined in §63.2872.

(2) The 12-month compliance ratio may include operating months occurring prior to a source shutdown and operating months that follow after the source resumes operation.

(3) If your source shuts down and processes no listed oilseed for an entire calendar month, then you must categorize the month as a nonoperating month, as defined in §63.2872. Exclude any nonoperating months from the compliance ratio determination.

(4) If your source is subject to an initial startup period as defined in §63.2872, exclude from the compliance ratio determination any solvent and oilseed information recorded for the initial startup period.

(5) If your source is subject to a malfunction period as defined in §63.2872, exclude from the compliance ratio determination any solvent and oilseed information recorded for the malfunction period.

(6) For sources processing cottonseed or specialty soybean, the solvent loss factor you use to determine the compliance ratio may change each operating month depending on the tons of oilseed processed during all normal operating periods in a 12 operating month period.

(c) If the compliance ratio is less than or equal to 1.00, your source was in compliance with the HAP emission requirements for the previous operating month.

(d) To determine the compliance ratio in Equation 2 of this section, you must select the appropriate oilseed solvent loss factor from Table 1 of this section. First, determine whether your source is new or existing using Table 1 of §63.2833. Then, under the appropriate existing or new source column, select the oilseed solvent loss factor that corresponds to each type oilseed or process operation for each operating month.

COMPLIANCE REQUIREMENTS

§63.2850 How do I comply with the hazardous air pollutant emission standards?

(a) *General requirements*. The requirements in paragraphs (a)(1)(i) through (iv) of this section apply to all affected sources:

(1) Submit the necessary notifications in accordance with §63.2860, which include:

(i) Initial notifications for existing sources.

(ii) Initial notifications for new and reconstructed sources.

(iii) Initial notifications for significant modifications to existing or new sources.

(iv) Notification of compliance status.

(2) Develop and implement a plan for demonstrating compliance in accordance with § 63.2851.

(3) Develop a written startup, shutdown and malfunction (SSM) plan in accordance with the provisions in § 63.2852.

(4) Maintain all the necessary records you have used to demonstrate compliance with this subpart in accordance with § 63.2862.

(5) Submit the reports in paragraphs (a)(5)(i) through (iii) of this section:

(i) Annual compliance certifications in accordance with § 63.2861(a).

(ii) Periodic SSM reports in accordance with § 63.2861(c).

(iii) Immediate SSM reports in accordance with § 63.2861(d).

(6) Submit all notifications and reports and maintain all records required by the General Provisions for performance testing if you add a control device that destroys solvent.

(b) *Existing sources under normal operation.* You must meet all of the requirements listed in paragraph (a) of this section and Table 1 of this section for sources under normal operation, and the schedules for demonstrating compliance for existing sources under normal operation in Table 2 of this section.

(c) *New sources.* Your new source, including a source that is categorized as new due to reconstruction, must meet the requirements associated with one of two compliance options. Within 15 days of the startup date, you must choose to comply with one of the options listed in paragraph (c)(1) or (2) of this section:

(1) *Normal operation.* Upon startup of your new source, you must meet all of the requirements listed in § 63.2850(a) and Table 1 of this section for sources under normal operation, and the schedules for demonstrating compliance for new sources under normal operation in Table 2 of this section.

(2) *Initial startup period.* For up to 6 calendar months after the startup date of your new source, you must meet all of the requirements listed in paragraph (a) of this section and Table 1 of this section for sources operating under an initial startup period, and the schedules for demonstrating compliance for new sources operating under an initial startup period in Table 2 of this section. After a maximum of 6 calendar months, your new source must then meet all of the requirements listed in Table 1 of this section for sources under normal operation.

(d) *Existing or new sources that have been significantly modified.* Your existing or new source that has been significantly modified must meet the requirements associated with one of two compliance options. Within 15 days of the modified source startup date, you must choose to comply with one of the options listed in paragraph (d)(1) or (2) of this section:

(1) *Normal operation.* Upon startup of your significantly modified existing or new source, you must meet all of the requirements listed in paragraph (a) of this section and Table 1 of this section for sources under normal operation, and the schedules for demonstrating compliance for an existing or new source that has been significantly modified in Table 2 of this section.

(2) *Initial startup period.* For up to 3 calendar months after the startup date of your significantly modified existing or new source, you must meet all of the requirements listed in paragraph (a) of this section and Table 1 of this section for sources operating under an initial startup period, and the schedules for demonstrating compliance for a significantly modified existing or new source operating under an initial startup period in Table 2 of this section. After a maximum of 3 calendar months, your new or existing source must meet all of the requirements listed in Table 1 of this section for sources under normal operation.

(e) *Existing or new sources experiencing a malfunction.* A *malfunction* is defined in § 63.2. In general, it means any sudden, infrequent, and not reasonably preventable failure of air pollution control equipment or process equipment to function in a usual manner. If your existing or new source experiences an unscheduled shutdown as a result of a malfunction, continues to operate during a malfunction (including

the period reasonably necessary to correct the malfunction), or starts up after a shutdown resulting from a malfunction, then you must meet the requirements associated with one of two compliance options. Routine or scheduled process startups and shutdowns resulting from, but not limited to, market demands, maintenance activities, and switching types of oilseed processed, are not startups or shutdowns resulting from a malfunction and, therefore, do not qualify for this provision. Within 15 days of the beginning date of the malfunction, you must choose to comply with one of the options listed in paragraphs (e)(1) through (2) of this section:

(1) *Normal operation*. Your source must meet all of the requirements listed in paragraph (a) of this section and one of the options listed in paragraphs (e)(1)(i) through (iii) of this section:

(i) Existing source normal operation requirements in paragraph (b) of this section.

(ii) New source normal operation requirements in paragraph (c)(1) of this section.

(iii) Normal operation requirements for sources that have been significantly modified in paragraph (d)(1) of this section.

(2) *Malfunction period*. Throughout the malfunction period, you must meet all of the requirements listed in paragraph (a) of this section and Table 1 of this section for sources operating during a malfunction period. At the end of the malfunction period, your source must then meet all of the requirements listed in Table 1 of this section for sources under normal operation. Table 1 of this section follows:

TABLE 1 OF § 63.2850.—REQUIREMENTS FOR COMPLIANCE WITH HAP EMISSION STANDARDS

Are you required to . . .	For periods of normal operation?	For initial startup periods subject to § 63.2850(c)(2) or (d)(2)?	For malfunction periods subject to § 63.2850(e)(2)?
(a) Operate and maintain your source in accordance with your SSM plan as described in § 63.2852?.	No, your source is not subject to the SSM plan, but rather the HAP emission limits of this standard.	Yes, throughout the entire initial startup period.	Yes, throughout the entire malfunction period.
(b) Determine and record the extraction solvent loss in gallons from your source?.	Yes, as described in § 63.2853.	Yes, as described in § 63.2862(e).	Yes, as described in § 63.2862(e).
(c) Record the volume fraction of HAP present at greater than 1 percent by volume and gallons of extraction solvent in shipment received?.	Yes	Yes	Yes.
(d) Determine and record the tons of each oilseed type processed by your source?.	Yes, as described in § 63.2855.	No	No.
(e) Determine the weighted average volume fraction of HAP in extraction solvent received as described in § 63.2854 by the end of the following calendar month?.	Yes	No. Except for solvent received by a new or reconstructed source commencing operation under an initial startup period, the HAP volume fraction in any solvent received during an initial startup period is included in the weighted average HAP determination for the next operating month.	No, the HAP volume fraction in any solvent received during a malfunction period is included in the weighted average HAP determination for the next operating month.
(f) Determine and record the actual solvent loss, weighted average volume fraction HAP, oilseed processed and compliance ratio for each 12 operating month period as described in § 63.2840 by the end of the following calendar month?.	Yes,	No, these requirements are not applicable because your source is not required to determine the compliance ratio with data recorded for an initial startup period.	No, these requirements are not applicable because your source is not required to determine the compliance ratio with data recorded for a malfunction period.

TABLE 1 OF § 63.2850.—REQUIREMENTS FOR COMPLIANCE WITH HAP EMISSION STANDARDS—Continued

Are you required to . . .	For periods of normal operation?	For initial startup periods subject to § 63.2850(c)(2) or (d)(2)?	For malfunction periods subject to § 63.2850(e)(2)?
(g) Submit a Notification of Compliance Status or Annual Compliance Certification as appropriate?.	Yes, as described in §§ 63.2860(d) and 63.2861(a).	No. However, you may be required to submit an annual compliance certification for previous operating months, if the deadline for the annual compliance certification happens to occur during the initial startup period.	No. However, you may be required to submit an annual compliance certification for previous operating months, if the deadline for the annual compliance certification happens to occur during the malfunction period.
(h) Submit a Deviation Notification Report by the end of the calendar month following the month in which you determined that the compliance ratio exceeds 1.00 as described in § 63.2861(b)?.	Yes	No, these requirements are not applicable because your source is not required to determine the compliance ratio with data recorded for an initial startup period.	No, these requirements are not applicable because your source is not required to determine the compliance ratio with data recorded for a malfunction period.
(i) Submit a Periodic SSM Report as described in § 63.2861(c)?.	No, a SSM activity is not categorized as normal operation.	Yes	Yes.
(j) Submit an Immediate SSM Report as described in § 63.2861(d)?.	No, a SSM activity is not categorized as normal operation.	Yes, only if your source does not follow the SSM plan.	Yes, only if your source does not follow the SSM plan.

TABLE 2 OF § 63.2850.—SCHEDULES FOR DEMONSTRATING COMPLIANCE UNDER VARIOUS SOURCE OPERATING MODES

If your source is . . .	and is operating under. . .	then your recordkeeping schedule. . .	You must determine your first compliance ratio by the end of the calendar month following. . .	Base your first compliance ratio on information recorded. . .
(a) Existing	Normal operation	Begins on the compliance date.	The first 12 operating months after the compliance date.	During the first 12 operating months after the compliance date.
(b) New	(1) Normal operation	Begins on the startup date of your new source.	The first 12 operating months after the startup date of the new source.	During the first 12 operating months after the startup date of the new source.
	(2) An initial startup period.	Begins on the startup date of your new source.	The first 12 operating months after termination of the initial startup period, which can last for up to 6 months.	During the first 12 operating months after the initial startup period, which can last for up to 6 months.
(c) Existing or new that has been significantly modified.	(1) Normal operation	Resumes on the startup date of the modified source.	The first operating month after the startup date of the modified source.	During the previous 11 operating months prior to the significant modification and the first operating month following the initial startup date of the source.
	(2) An initial startup period.	Resumes on the startup date of the modified source.	The first operating month after termination of the initial startup period, which can last up to 3 months.	During the 11 operating months before the significant modification and the first operating month after the initial startup period.

§ 63.2851 What is a plan for demonstrating compliance?

(a) You must develop and implement a written plan for demonstrating compliance that provides the detailed procedures you will follow to monitor and record data necessary for demonstrating compliance with this subpart. Procedures followed for quantifying solvent loss from the source and amount of oilseed processed vary from source to source because of site-specific factors such as equipment design characteristics and operating conditions. Typical procedures include one or more accurate measurement methods such as weigh scales, volumetric displacement, and material mass balances. Because the industry does not have a uniform set of procedures, you must develop and implement your own site-specific plan for demonstrating compliance before the compliance date for your source. You must also incorporate the plan for demonstrating compliance by reference in the source's title V permit and keep the plan on-site and readily available as long as the source is operational. If you make any changes to the plan for demonstrating compliance, then you must keep all previous versions of the plan and make them readily available for inspection for at least 5 years after each revision. The plan for demonstrating compliance must include the items in paragraphs (a)(1) through (7) of this section:

(1) The name and address of the owner or operator.

(2) The physical address of the vegetable oil production process.

(3) A detailed description of all methods of measurement your source will use to determine your solvent losses, HAP content of solvent, and the tons of each type of oilseed processed.

(4) When each measurement will be made.

(5) Examples of each calculation you will use to determine your compliance status. Include examples of how you will convert data measured with one parameter to other terms for use in compliance determination.

(6) Example logs of how data will be recorded.

(7) A plan to ensure that the data continue to meet compliance demonstration needs.

(b) The responsible agency of these NESHAP may require you to revise your plan for demonstrating compliance. The responsible agency may require reasonable revisions if the procedures lack detail, are inconsistent or do not accurately determine solvent loss, HAP content of the solvent, or the tons of oilseed processed.

§ 63.2852 What is a startup, shutdown, and malfunction plan?

You must develop a written SSM plan in accordance with § 63.6(e)(3) and implement the plan, when applicable. You must complete the SSM plan before the compliance date for your source. You must also keep the SSM plan on-site and readily available as long as the source is operational.The SSM plan provides detailed procedures for operating and maintaining your source to minimize emissions during a qualifying SSM event for which the source chooses the § 63.2850(e)(2) malfunction period, or the § 63.2850(c)(2) or (d)(2) initial startup period. The SSM plan must specify a program of corrective action for malfunctioning process and air pollution control equipment and reflect the best practices now in use by the industry to minimize emissions. Some or all of the procedures may come from plans you developed for other purposes such as a Standard Operating Procedure manual or an Occupational Safety and Health Administration Process Safety Management plan. To qualify as a SSM plan, other such plans must meet all the applicable requirements of these NESHAP.

[66 FR 19011, Apr. 12, 2001, as amended at 67 FR 16321, Apr. 5, 2002]

§ 63.2853 How do I determine the actual solvent loss?

By the end of each calendar month following an operating month, you must determine the total solvent loss in gallons for the previous operating month. The total solvent loss for an operating month includes all solvent losses that occur during normal operating periods within the operating month. If you have determined solvent losses for 12 or more operating months, then you must also determine the 12 operating months rolling sum of actual solvent loss in gallons by summing the

monthly actual solvent loss for the previous 12 operating months. The 12 operating months rolling sum of solvent loss is the ''actual solvent loss,'' which is used to calculate your compliance ratio as described in § 63.2840.

(a) To determine the actual solvent loss from your source, follow the procedures in your plan for demonstrating compliance to determine the items in paragraphs (a)(1) through (7) of this section:

(1) *The dates that define each operating status period during a calendar month.* The dates that define each operating status period include the beginning date of each calendar month and the date of any change in the source operating status. If the source maintains the same operating status during an entire calendar month, these dates are the beginning and ending dates of the calendar month. If, prior to the effective date of this rule, your source determines the solvent loss on an *accounting month,* as defined in § 63.2872, rather than a calendar month basis, and you have 12 complete accounting months of approximately equal duration in a calendar year, you may substitute the accounting month time interval for the calendar month time interval. If you choose to use an accounting month rather than a calendar month, you must document this measurement frequency selection in your plan for demonstrating compliance, and you must remain on this schedule unless you request and receive written approval from the agency responsible for these NESHAP.

(2) *Source operating status.* You must categorize the operating status of your source for each recorded time interval in accordance with criteria in Table 1 of this section, as follows:

TABLE 1 OF § 63.2853.—CATEGORIZING YOUR SOURCE OPERATING STATUS

If during a recorded time interval . . .	then your source operating status is . . .
(i) Your source processes any amount of listed oilseed and source is not operating under an initial startup operating period or a malfunction period subject to § 63.2850(c)(2), (d)(2), or (e)(2).	A normal operating period.
(ii) Your source processes no agricultural product and your source is not operating under an initial startup period or malfunction period subject to § 63.2850(c)(2), (d)(2), or (e)(2).	A nonoperating period.
(iii) You choose to operate your source under an initial startup period subject to § 63.2850(c)(2) or (d)(2).	An initial startup period.
(iv) You choose to operate your source under a malfunction period subject to § 63.2850(e)(2).	A malfunction period.
(v) Your source processes agricultural products not defined as listed oilseed.	An exempt period.

(3) *Measuring the beginning and ending solvent inventory.* You are required to measure and record the solvent inventory on the beginning and ending dates of each normal operating period that occurs during an operating month. An operating month is any calendar month with at least one normal operating period. You must consistently follow the procedures described in your plan for demonstrating compliance, as specified in § 63.2851, to determine the extraction solvent inventory, and maintain readily available records of the actual solvent loss inventory, as described in § 63.2862(c)(1). In general, you must measure and record the solvent inventory only when the source is actively processing any type of agricultural product. When the source is not active, some or all of the solvent working capacity is transferred to solvent storage tanks which can artificially inflate the solvent inventory.

(4) *Gallons of extraction solvent received.* Record the total gallons of extraction solvent received in each shipment. For most processes, the gallons of solvent received represents purchases of delivered solvent added to the solvent storage inventory. However, if your process refines additional vegetable oil from off-site sources, recovers solvent from the off-site oil, and adds it to the on-site solvent inventory, then you must determine the quantity of recovered solvent and include it in

the gallons of extraction solvent received.

(5) *Solvent inventory adjustments.* In some situations, solvent losses determined directly from the measured solvent inventory and quantity of solvent received is not an accurate estimate of the ''actual solvent loss'' for use in determining compliance ratios. In such cases, you may adjust the total solvent loss for each normal operating period as long as you provide a reasonable justification for the adjustment. Situations that may require adjustments of the total solvent loss include, but are not limited to, situations in paragraphs (a)(5)(i) and (ii) of this section:

(i) *Solvent destroyed in a control device.* You may use a control device to reduce solvent emissions to meet the emission standard. The use of a control device does not alter the emission limit for the source. If you use a control device that reduces solvent emissions through destruction of the solvent instead of recovery, then determine the gallons of solvent that enter the control device and are destroyed there during each normal operating period. All solvent destroyed in a control device during a normal operating period can be subtracted from the total solvent loss. Examples of destructive emission control devices include catalytic incinerators, boilers, or flares. Identify and describe, in your plan for demonstrating compliance, each type of reasonable and sound measurement method that you use to quantify the gallons of solvent entering and exiting the control device and to determine the destruction efficiency of the control device. You may use design evaluations to document the gallons of solvent destroyed or removed by the control device instead of performance testing under § 63.7. The design evaluations must be based on the procedures and options described in § 63.985(b)(1)(i)(A) through (C) or § 63.11, as appropriate. All data, assumptions, and procedures used in such evaluations must be documented and available for inspection. If you use performance testing to determine solvent flow rate to the control device or destruction efficiency of the device, follow the procedures as outlined in § 63.997(e)(1) and (2). Instead of periodic performance testing to demonstrate continued good operation of the control device, you may develop a monitoring plan, following the procedures outlined in § 63.988(c) and using operational parametric measurement devices such as fan parameters, percent measurements of lower explosive limits, and combustion temperature.

(ii) Changes in solvent working capacity. In records you keep on-site, document any process modifications resulting in changes to the solvent working capacity in your vegetable oil production process. *Solvent working capacity* is defined in § 63.2872. In general, solvent working capacity is the volume of solvent normally retained in solvent recovery equipment such as the extractor, desolventizer-toaster, solvent storage, working tanks, mineral oil absorber, condensers, and oil/solvent distillation system. If the change occurs during a normal operating period, you must determine the difference in working solvent volume and make a one-time documented adjustment to the solvent inventory.

(b) Use Equation 1 of this section to determine the actual solvent loss occurring from your affected source for all normal operating periods recorded within a calendar month. Equation 1 of this section follows:

$$\text{Monthly Actual Solvent (gal)} = \sum_{i=1}^{n} \left(SOLV_B - SOLV_E + SOLV_R \pm SOLV_A\right)_i \qquad \text{(Eq. 1)}$$

Where:

$SOLV_B$ = Gallons of solvent in the inventory at the beginning of normal operating period ''i'' as determined in paragraph (a)(3) of this section.

$SOLV_E$ = Gallons of solvent in the inventory at the end of normal operating period ''i'' as determined in paragraph (a)(3) of this section.

$SOLV_R$ = Gallons of solvent received between the beginning and ending inventory dates of normal operating period ''i'' as determined in paragraph (a)(4) of this section.

$SOLV_A$ = Gallons of solvent added or removed from the extraction solvent inventory during normal operating period ''i'' as determined in paragraph (a)(5) of this section.

n = Number of normal operating periods in a calendar month.

(c) The actual solvent loss is the total solvent losses during normal operating periods for the previous 12 operating months. You determine your actual solvent loss by summing the monthly actual solvent losses for the previous 12 operating months. You must record the actual solvent loss by the end of each calendar month following an operating month. Use the actual solvent loss in Equation 2 of § 63.2840 to determine the compliance ratio. Actual solvent loss does not include losses that occur during operating status periods listed in paragraphs (c)(1) through (4) of this section. If any one of these four operating status periods span an entire month, then the month is treated as nonoperating and there is no compliance ratio determination.

(1) Nonoperating periods as described in paragraph (a)(2)(ii) of this section.

(2) Initial startup periods as described in § 63.2850(c)(2) or (d)(2).

(3) Malfunction periods as described in § 63.2850(e)(2).

(4) Exempt operation periods as described in paragraph (a)(2)(v) of this section.

§ 63.2854 How do I determine the weighted average volume fraction of HAP in the actual solvent loss?

(a) This section describes the information and procedures you must use to determine the weighted average volume fraction of HAP in extraction solvent received for use in your vegetable oil production process. By the end of each calendar month following an operating month, determine the weighted average volume fraction of HAP in extraction solvent received since the end of the previous operating month. If you have determined the monthly weighted average volume fraction of HAP in solvent received for 12 or more operating months, then also determine an overall weighted average volume fraction of HAP in solvent received for the previous 12 operating months. Use the volume fraction of HAP determined as a 12 operating months weighted average in Equation 2 of § 63.2840 to determine the compliance ratio.

(b) To determine the volume fraction of HAP in the extraction solvent determined as a 12 operating months weighted average, you must comply with paragraphs (b)(1) through (3) of this section:

(1) Record the volume fraction of each HAP comprising more than 1 percent by volume of the solvent in each delivery of solvent, including solvent recovered from off-site oil. To determine the HAP content of the material in each delivery of solvent, the reference method is EPA Method 311 of appendix A of this part. You may use EPA Method 311, an approved alternative method, or any other reasonable means for determining the HAP content. Other reasonable means of determining HAP content include, but are not limited to, a material safety data sheet or a manufacturer's certificate of analysis. A certificate of analysis is a legal and binding document provided by a solvent manufacturer. The purpose of a certificate of analysis is to list the test methods and analytical results that determine chemical properties of the solvent and the volume percentage of all HAP components present in the solvent at quantities greater than 1 percent by volume. You are not required to test the materials that you use, but the Administrator may require a test using EPA Method 311 (or an approved alternative method) to confirm the reported HAP content. However, if the results of an analysis by EPA Method 311 are different from the HAP content determined by another means, the EPA Method 311 results will govern compliance determinations.

(2) Determine the weighted average volume fraction of HAP in the extraction solvent each operating month. The

weighted average volume fraction of HAP for an operating month includes all solvent received since the end of the last operating month, regardless of the operating status at the time of the delivery. Determine the monthly weighted average volume fraction of HAP by summing the products of the HAP volume fraction of each delivery and the volume of each delivery and dividing the sum by the total volume of all deliveries as expressed in Equation 1 of this section. Record the result by the end of each calendar month following an operating month. Equation 1 of this section follows:

$$\text{Monthly Weighted Average HAP Content of Extraction Solvent (volume fraction)} = \frac{\sum_{i=1}^{n}\left(\text{Received}_i * \text{Content}_i\right)}{\text{Total Received}} \qquad \text{(Eq. 1)}$$

Where:

Received_i = Gallons of extraction solvent received in delivery ''i.''

Content_i = The volume fraction of HAP in extraction solvent delivery ''i.''

Total Received = Total gallons of extraction solvent received since the end of the previous operating month.

n = Number of extraction solvent deliveries since the end of the previous operating month.

(3) Determine the volume fraction of HAP in your extraction solvent as a 12 operating months weighted average. When your source has processed oilseed for 12 operating months, sum the products of the monthly weighted average HAP volume fraction and corresponding volume of solvent received, and divide the sum by the total volume of solvent received for the 12 operating months, as expressed by Equation 2 of this section. Record the result by the end of each calendar month following an operating month and use it in Equation 2 of §63.2840 to determine the compliance ratio. Equation 2 of this section follows:

$$\text{12-Month Weighted Average of HAP Content in Solvent Received (volume fraction)} = \frac{\sum_{i=1}^{12}\left(\text{Received}_i * \text{Content}_i\right)}{\text{Total Received}} \qquad \text{(Eq. 2)}$$

Where:

Received_i = Gallons of extraction solvent received in operating month ''i'' as determined in accordance with §63.2853(a)(4).

Content_i = Average volume fraction of HAP in extraction solvent received in operating month ''i'' as determined in accordance with paragraph (b)(1) of this section.

Total Received = Total gallons of extraction solvent received during the previous 12 operating months.

§63.2855 How do I determine the quantity of oilseed processed?

All oilseed measurements must be determined on an *as received* basis, as defined in §63.2872. The as received basis refers to the oilseed chemical and physical characteristics as initially received by the source and prior to any oilseed handling and processing. By the end of each calendar month following an operating month, you must determine the tons as received of each listed oilseed processed for the operating month. The total oilseed processed for an operating month includes the total

of each oilseed processed during all normal operating periods that occur within the operating month. If you have determined the tons of oilseed processed for 12 or more operating months, then you must also determine the 12 operating months rolling sum of each type oilseed processed by summing the tons of each type of oilseed processed for the previous 12 operating months. The 12 operating months rolling sum of each type of oilseed processed is used to calculate the compliance ratio as described in § 63.2840.

(a) To determine the tons as received of each type of oilseed processed at your source, follow the procedures in your plan for demonstrating compliance to determine the items in paragraphs (a)(1) through (5) of this section:

(1) *The dates that define each operating status period.* The dates that define each operating status period include the beginning date of each calendar month and the date of any change in the source operating status. If, prior to the effective date of this rule, your source determines the oilseed inventory on an accounting month rather than a calendar month basis, and you have 12 complete accounting months of approximately equal duration in a calendar year, you may substitute the accounting month time interval for the calendar month time interval. If you choose to use an accounting month rather than a calendar month, you must document this measurement frequency selection in your plan for demonstrating compliance, and you must remain on this schedule unless you request and receive written approval from the agency responsible for these NESHAP. The dates on each oilseed inventory log must be consistent with the dates recorded for the solvent inventory.

(2) *Source operating status.* You must categorize the source operation for each recorded time interval. The source operating status for each time interval recorded on the oilseed inventory for each type of oilseed must be consistent with the operating status recorded on the solvent inventory logs as described in § 63.2853(a)(2).

(3) *Measuring the beginning and ending inventory for each oilseed.* You are required to measure and record the oilseed inventory on the beginning and ending dates of each normal operating period that occurs during an operating month. An operating month is any calendar month with at least one normal operating period. You must consistently follow the procedures described in your plan for demonstrating compliance, as specified in § 63.2851, to determine the oilseed inventory on an as received basis and maintain readily available records of the oilseed inventory as described by § 63.2862(c)(3).

(4) *Tons of each oilseed received.* Record the type of oilseed and tons of each shipment of oilseed received and added to your on-site storage.

(5) *Oilseed inventory adjustments.* In some situations, determining the quantity of oilseed processed directly from the measured oilseed inventory and quantity of oilseed received is not an accurate estimate of the tons of oilseed processed for use in determining compliance ratios. For example, spoiled and molded oilseed removed from storage but not processed by your source will result in an overestimate of the quantity of oilseed processed. In such cases, you must adjust the oilseed inventory and provide a justification for the adjustment. Situations that may require oilseed inventory adjustments include, but are not limited to, the situations listed in paragraphs (a)(5)(i) through (v) of this section:

(i) Oilseed that mold or otherwise become unsuitable for processing.

(ii) Oilseed you sell before it enters the processing operation.

(iii) Oilseed destroyed by an event such as a process malfunction, fire, or natural disaster.

(iv) Oilseed processed through operations prior to solvent extraction such as screening, dehulling, cracking, drying, and conditioning; but that are not routed to the solvent extractor for further processing.

(v) Periodic physical measurements of inventory. For example, some sources periodically empty oilseed storage silos to physically measure the current oilseed inventory. This periodic measurement procedure typically results in a small inventory correction. The correction factor, usually less than

1 percent, may be used to make an adjustment to the source's oilseed inventory that was estimated previously with indirect measurement techniques. To make this adjustment, your plan for demonstrating compliance must provide for such an adjustment.

(b) Use Equation 1 of this section to determine the quantity of each oilseed type processed at your affected source during normal operating periods recorded within a calendar month. Equation 1 of this section follows:

$$\text{Monthly Quantity of Each Oilseed Processed (tons)} = \sum_{n=1}^{n}\left(SEED_B - SEED_E + SEED_R \pm SEED_A\right) \qquad \text{(Eq. 1)}$$

Where:

$SEED_B$ = Tons of oilseed in the inventory at the beginning of normal operating period ''i'' as determined in accordance with paragraph (a)(3) of this section.

$SEED_E$ = Tons of oilseed in the inventory at the end of normal operating period ''i'' as determined in accordance with paragraph (a)(3) of this section.

$SEED_R$ = Tons of oilseed received during normal operating period ''i'' as determined in accordance with paragraph (a)(4) of this section.

$SEED_A$ = Tons of oilseed added or removed from the oilseed inventory during normal operating period ''i'' as determined in accordance with paragraph (a)(5) of this section.

n = Number of normal operating periods in the calendar month during which this type oilseed was processed.

(c) The quantity of each oilseed processed is the total tons of each type of listed oilseed processed during normal operating periods in the previous 12 operating months. You determine the tons of each oilseed processed by summing the monthly quantity of each oilseed processed for the previous 12 operating months. You must record the 12 operating months quantity of each type of oilseed processed by the end of each calendar month following an operating month. Use the 12 operating months quantity of each type of oilseed processed to determine the compliance ratio as described in §63.2840. The quantity of oilseed processed does not include oilseed processed during the operating status periods in paragraphs (c)(1) through (4) of this section:

(1) Nonoperating periods as described in §63.2853 (a)(2)(ii).

(2) Initial startup periods as described in §63.2850(c)(2) or (d)(2).

(3) Malfunction periods as described in §63.2850(e)(2).

(4) Exempt operation periods as described in §63.2853 (a)(2)(v).

(5) If any one of these four operating status periods span an entire calendar month, then the calendar month is treated as a nonoperating month and there is no compliance ratio determination.

NOTIFICATIONS, REPORTS, AND RECORDS

§63.2860 What notifications must I submit and when?

You must submit the one-time notifications listed in paragraphs (a) through (d) of this section to the responsible agency:

(a) *Initial notification for existing sources.* For an existing source, submit an initial notification to the agency responsible for these NESHAP no later than 120 days after the effective date of this subpart. In the notification, include the items in paragraphs (a)(1) through (5) of this section:

(1) The name and address of the owner or operator.

(2) The physical address of the vegetable oil production process.

(3) Identification of the relevant standard, such as the vegetable oil production NESHAP, and compliance date.

(4) A brief description of the source including the types of listed oilseeds processed, nominal operating capacity, and type of desolventizer(s) used.

(5) A statement designating the source as a major source of HAP or a

demonstration that the source meets the definition of an area source. An area source is a source that is not a major source and is not collocated within a plant site with other sources that are individually or collectively a major source.

(b) *Initial notifications for new and reconstructed sources.* New or reconstructed sources must submit a series of notifications before, during, and after source construction per the schedule listed in § 63.9. The information requirements for the notifications are the same as those listed in the General Provisions with the exceptions listed in paragraphs (b)(1) and (2) of this section:

(1) The application for approval of construction does not require the specific HAP emission data required in § 63.5(d)(1)(ii)(H) and (iii), (d)(2) and (d)(3)(ii). The application for approval of construction would include, instead, a brief description of the source including the types of listed oilseeds processed, nominal operating capacity, and type of desolventizer(s) used.

(2) The notification of actual startup date must also include whether you have elected to operate under an initial startup period subject to § 63.2850(c)(2) and provide an estimate and justification for the anticipated duration of the initial startup period.

(c) *Significant modification notifications.* Any existing or new source that plans to undergo a significant modification as defined in § 63.2872 must submit two reports as described in paragraphs (c)(1) and (2) of this section:

(1) Initial notification. You must submit an initial notification to the agency responsible for these NESHAP 30 days prior to initial startup of the significantly modified source. The initial notification must demonstrate that the proposed changes qualify as a significant modification. The initial notification must include the items in paragraphs (c)(1)(i) and (ii) of this section:

(i) The expected startup date of the modified source.

(ii) A description of the significant modification including a list of the equipment that will be replaced or modified. If the significant modification involves changes other than adding or replacing extractors, desolventizer-toasters (conventional and specialty), and meal dryer-coolers, then you must also include the fixed capital cost of the new components, expressed as a percentage of the fixed capital cost to build a comparable new vegetable oil production process; supporting documentation for the cost estimate; and documentation that the proposed changes will significantly affect solvent losses.

(2) Notification of actual startup. You must submit a notification of actual startup date within 15 days after initial startup of the modified source. The notification must include the items in paragraphs (c)(2)(i) through (iv) of this section:

(i) The initial startup date of the modified source.

(ii) An indication whether you have elected to operate under an initial startup period subject to § 63.2850(d)(2).

(iii) The anticipated duration of any initial startup period.

(iv) A justification for the anticipated duration of any initial startup period.

(d) *Notification of compliance status.* As an existing, new, or reconstructed source, you must submit a notification of compliance status report to the responsible agency no later than 60 days after determining your initial 12 operating months compliance ratio. If you are an existing source, you generally must submit this notification no later than 50 calendar months after the effective date of these NESHAP (36 calendar months for compliance, 12 operating months to record data, and 2 calendar months to complete the report). If you are a new or reconstructed source, the notification of compliance status is generally due no later than 20 calendar months after initial startup (6 calendar months for the initial startup period, 12 operating months to record data, and 2 calendar months to complete the report). The notification of compliance status must contain the items in paragraphs (d)(1) through (6) of this section:

(1) The name and address of the owner or operator.

(2) The physical address of the vegetable oil production process.

(3) Each listed oilseed type processed during the previous 12 operating months.

(4) Each HAP identified under §63.2854(a) as being present in concentrations greater than 1 percent by volume in each delivery of solvent received during the 12 operating months period used for the initial compliance determination.

(5) A statement designating the source as a major source of HAP or a demonstration that the source qualifies as an area source. An area source is a source that is not a major source and is not collocated within a plant site with other sources that are individually or collectively a major source.

(6) A compliance certification indicating whether the source complied with all of the requirements of this subpart throughout the 12 operating months used for the initial source compliance determination. This certification must include a certification of the items in paragraphs (d)(6)(i) through (iii) of this section:

(i) The plan for demonstrating compliance (as described in §63.2851) and SSM plan (as described in §63.2852) are complete and available on-site for inspection.

(ii) You are following the procedures described in the plan for demonstrating compliance.

(iii) The compliance ratio is less than or equal to 1.00.

§63.2861 What reports must I submit and when?

After the initial notifications, you must submit the reports in paragraphs (a) through (d) of this section to the agency responsible for these NESHAP at the appropriate time intervals:

(a) *Annual compliance certifications.* The first annual compliance certification is due 12 calendar months after you submit the notification of compliance status. Each subsequent annual compliance certification is due 12 calendar months after the previous annual compliance certification. The annual compliance certification provides the compliance status for each operating month during the 12 calendar months period ending 60 days prior to the date on which the report is due. Include the information in paragraphs (a)(1) through (6) of this section in the annual certification:

(1) The name and address of the owner or operator.

(2) The physical address of the vegetable oil production process.

(3) Each listed oilseed type processed during the 12 calendar months period covered by the report.

(4) Each HAP identified under §63.2854(a) as being present in concentrations greater than 1 percent by volume in each delivery of solvent received during the 12 calendar months period covered by the report.

(5) A statement designating the source as a major source of HAP or a demonstration that the source qualifies as an area source. An area source is a source that is not a major source and is not collocated within a plant site with other sources that are individually or collectively a major source.

(6) A compliance certification to indicate whether the source was in compliance for each compliance determination made during the 12 calendar months period covered by the report. For each such compliance determination, you must include a certification of the items in paragraphs (a)(6)(i) through (ii) of this section:

(i) You are following the procedures described in the plan for demonstrating compliance.

(ii) The compliance ratio is less than or equal to 1.00.

(b) *Deviation notification report.* Submit a deviation report for each compliance determination you make in which the compliance ratio exceeds 1.00 as determined under §63.2840(c). Submit the deviation report by the end of the month following the calendar month in which you determined the deviation. The deviation notification report must include the items in paragraphs (b)(1) through (4) of this section:

(1) The name and address of the owner or operator.

(2) The physical address of the vegetable oil production process.

(3) Each listed oilseed type processed during the 12 operating months period for which you determined the deviation.

(4) The compliance ratio comprising the deviation. You may reduce the frequency of submittal of the deviation

notification report if the agency responsible for these NESHAP does not object as provided in § 63.10(e)(3)(iii).

(c) *Periodic startup, shutdown, and malfunction report.* If you choose to operate your source under an initial startup period subject to § 63.2850(c)(2) or (d)(2) or a malfunction period subject to § 63.2850(e)(2), you must submit a periodic SSM report by the end of the calendar month following each month in which the initial startup period or malfunction period occurred. The periodic SSM report must include the items in paragraphs (c)(1) through (3) of this section:

(1) The name, title, and signature of a source's responsible official who is certifying that the report accurately states that all actions taken during the initial startup or malfunction period were consistent with the SSM plan.

(2) A description of events occurring during the time period, the date and duration of the events, and reason the time interval qualifies as an initial startup period or malfunction period.

(3) An estimate of the solvent loss during the initial startup or malfunction period with supporting documentation.

(d) *Immediate SSM reports.* If you handle a SSM during an initial startup period subject to § 63.2850(c)(2) or (d)(2) or a malfunction period subject to § 63.2850(e)(2) differently from procedures in the SSM plan and the relevant emission requirements in § 63.2840 are exceeded, then you must submit an immediate SSM report. Immediate SSM reports consist of a telephone call or facsimile transmission to the responsible agency within 2 working days after starting actions inconsistent with the SSM plan, followed by a letter within 7 working days after the end of the event. The letter must include the items in paragraphs (d)(1) through (3) of this section:

(1) The name, title, and signature of a source's responsible official who is certifying the accuracy of the report, an explanation of the event, and the reasons for not following the SSM plan.

(2) A description and date of the SSM event, its duration, and reason it qualifies as a SSM.

(3) An estimate of the solvent loss for the duration of the SSM event with supporting documentation.

[66 FR 19011, Apr. 12, 2001, as amended at 67 FR 16321, Apr. 5, 2002]

§ 63.2862 What records must I keep?

(a) You must satisfy the recordkeeping requirements of this section by the compliance date for your source specified in Table 1 of § 63.2834.

(b) Prepare a plan for demonstrating compliance (as described in § 63.2851) and a SSM plan (as described in § 63.2852). In these two plans, describe the procedures you will follow in obtaining and recording data, and determining compliance under normal operations or a SSM subject to the § 63.2850(c)(2) or (d)(2) initial startup period or the § 63.2850(e)(2) malfunction period. Complete both plans before the compliance date for your source and keep them on-site and readily available as long as the source is operational.

(c) If your source processes any listed oilseed, record the items in paragraphs (c)(1) through (5) of this section:

(1) For the solvent inventory, record the information in paragraphs (c)(1)(i) through (vii) of this section in accordance with your plan for demonstrating compliance:

(i) Dates that define each operating status period during a calendar month.

(ii) The operating status of your source such as normal operation, nonoperating, initial startup period, malfunction period, or exempt operation for each recorded time interval.

(iii) Record the gallons of extraction solvent in the inventory on the beginning and ending dates of each normal operating period.

(iv) The gallons of all extraction solvent received, purchased, and recovered during each calendar month.

(v) All extraction solvent inventory adjustments, additions or subtractions. You must document the reason for the adjustment and justify the quantity of the adjustment.

(vi) The total solvent loss for each calendar month, regardless of the source operating status.

(vii) The actual solvent loss in gallons for each operating month.

(2) For the weighted average volume fraction of HAP in the extraction solvent, you must record the items in paragraphs (c)(2)(i) through (iii) of this section:

(i) The gallons of extraction solvent received in each delivery.

(ii) The volume fraction of each HAP exceeding 1 percent by volume in each delivery of extraction solvent.

(iii) The weighted average volume fraction of HAP in extraction solvent received since the end of the last operating month as determined in accordance with § 63.2854(b)(2).

(3) For each type of listed oilseed processed, record the items in paragraphs (c)(3)(i) through (vi) of this section, in accordance with your plan for demonstrating compliance:

(i) The dates that define each operating status period. These dates must be the same as the dates entered for the extraction solvent inventory.

(ii) The operating status of your source such as normal operation, nonoperating, initial startup period, malfunction period, or exempt operation for each recorded time interval. On the log for each type of listed oilseed that is not being processed during a normal operating period, you must record which type of listed oilseed is being processed in addition to the source operating status.

(iii) The oilseed inventory for the type of listed oilseed being processed on the beginning and ending dates of each normal operating period.

(iv) The tons of each type of listed oilseed received at the affected source each normal operating period.

(v) All listed oilseed inventory adjustments, additions or subtractions for normal operating periods. You must document the reason for the adjustment and justify the quantity of the adjustment.

(vi) The tons of each type of listed oilseed processed during each operating month.

(d) After your source has processed listed oilseed for 12 operating months, and you are not operating during an initial startup period as described in § 63.2850(c)(2) or (d)(2), or a malfunction period as described in § 63.2850(e)(2), record the items in paragraphs (d)(1) through (5) of this section by the end of the calendar month following each operating month:

(1) The 12 operating months rolling sum of the actual solvent loss in gallons as described in § 63.2853(c).

(2) The weighted average volume fraction of HAP in extraction solvent received for the previous 12 operating months as described in § 63.2854(b)(3).

(3) The 12 operating months rolling sum of each type of listed oilseed processed at the affected source in tons as described in § 63.2855(c).

(4) A determination of the compliance ratio. Using the values from §§ 63.2853, 63.2854, 63.2855, and Table 1 of § 63.2840, calculate the compliance ratio using Equation 2 of § 63.2840.

(5) A statement of whether the source is in compliance with all of the requirements of this subpart. This includes a determination of whether you have met all of the applicable requirements in § 63.2850.

(e) For each SSM event subject to an initial startup period as described in § 63.2850(c)(2) or (d)(2), or a malfunction period as described in § 63.2850(e)(2), record the items in paragraphs (e)(1) through (3) of this section by the end of the calendar month following each month in which the initial startup period or malfunction period occurred:

(1) A description and date of the SSM event, its duration, and reason it qualifies as an initial startup or malfunction.

(2) An estimate of the solvent loss in gallons for the duration of the initial startup or malfunction period with supporting documentation.

(3) A checklist or other mechanism to indicate whether the SSM plan was followed during the initial startup or malfunction period.

§ 63.2863 In what form and how long must I keep my records?

(a) Your records must be in a form suitable and readily available for review in accordance with § 63.10(b)(1).

(b) As specified in § 63.10(b)(1), you must keep each record for 5 years following the date of each occurrence, measurement, maintenance, corrective action, report, or record.

(c) You must keep each record on-site for at least 2 years after the date of

each occurrence, measurement, maintenance, corrective action, report, or record, in accordance with §3.10(b)(1). You can keep the records off-site for the remaining 3 years.

OTHER REQUIREMENTS AND INFORMATION

§ 63.2870 What parts of the General Provisions apply to me?

Table 1 of this section shows which parts of the General Provisions in §§ 63.1 through 63.15 apply to you. Table 1 of § 63.2870 follows:

TABLE 1 OF § 63.2870.—APPLICABILITY OF 40 CFR PART 63, SUBPART A, TO 40 CFR, PART 63, SUBPART GGGG

General provisions citation	Subject of citation	Brief description of requirement	Applies to subpart	Explanation
§ 63.1	Applicability	Initial applicability determination; applicability after standard established; permit requirements; extensions; notifications.	Yes	
§ 63.2	Definitions	Definitions for part 63 standards	Yes	Except as specifically provided in this subpart.
§ 63.3	Units and abbreviations	Units and abbreviations for part 63 standards.	Yes.	
§ 63.4	Prohibited activities and circumvention.	Prohibited activities; compliance date; circumvention; severability.	Yes	
§ 63.5	Construction/reconstruction	Applicability; applications; approvals	Yes	Except for subsections of § 63.5 as listed below.
§ 63.5(c)	[Reserved]			
§ 63.5(d)(1)(ii)(H)	Application for approval	Type and quantity of HAP, operating parameters.	No	All sources emit HAP. Subpart GGGG does not require control from specific emission points.
§ 63.5(d)(1)(ii)(I)	[Reserved]			
§ 63.5(d)(1)(iii), (d)(2), (d)(3)(ii).		Application for approval	No	The requirements of the application for approval for new, reconstructed and significantly modified sources are described in § 63.2860(b) and (c) of subpart GGGG. General provision requirements for identification of HAP emission points or estimates of actual emissions are not required. Descriptions of control and methods, and the estimated and actual control efficiency of such do not apply. Requirements for describing control equipment and the estimated and actual control efficiency of such equipment apply only to control equipment to which the subpart GGGG requirements for quantifying.
§ 63.6	Applicability of General Provisions	Applicability	Yes	Except for subsections of § 63.6 as listed below.
§ 63.6(b)(1)–(3)	Compliance dates, new and reconstructed sources.		No	Section 63.2834 of subpart GGGG specifies the compliance dates for new and reconstructed sources.
§ 63.6(b)(6)	[Reserved]			
§ 63.6(c)(3)–(4)	[Reserved]			
§ 63.6(d)	[Reserved]			
§ 63.6(e)(1) through (e)(3)(ii) and § 63.6(e)(3)(v) through (vii).	Operation and maintanance requirements.		Yes	Implement your SSM plan, as specified in § 63.2852.
§ 63.6(e)(3)(v)(iii)	Operation and maintenance requirements.		No	Implement your plan, as specified in § 63.2852.
§ 63.6(e)(3)(iv)	Operation and maintenance requirements.		No	Report SSM and in accordance with § 63.2861(c) and (d).
§ 63.6(e)(3)(viii)	Operation and maintenance requirements.		Yes	Except, report each revision to your SSM plan in accordance with § 63.2861(c) rather than § 63.10(d)(5) as required under § 63.6(e)(3)(viii).

TABLE 1 OF § 63.2870.—APPLICABILITY OF 40 CFR PART 63, SUBPART A, TO 40 CFR, PART 63, SUBPART GGGG—Continued

General provisions citation	Subject of citation	Brief description of requirement	Applies to subpart	Explanation
§ 63.6(f)–(g)	Compliance with nonopacity emission standards except during SSM.	Comply with emission standards at all times except during SSM.	No	Subpart GGGG does not have nonopacity requirements.
§ 63.6(h)	Opacity/Visible emission (VE) standards.		No	Subpart GGGG has no opacity or VE standards.
§ 63.6(i)	Compliance extension	Procedures and criteria for responsible agency to grant compliance extension.	Yes	
§ 63.6(j)	Presidential compliance exemption	President may exempt source category from requirement to comply with subpart.	Yes	
§ 63.7	Performance testing requirements	Schedule, conditions, notifications and procedures.	Yes	Subpart GGGG requires performance testing only if the source applies additional control that destroys solvent. Section 63.2850(a)(6) requires sources to follow the performance testing guidelines of the General Provisions if a control is added.
§ 63.8	Monitoring requirements		No	Subpart GGGG does not require monitoring other than as specified therein.
§ 63.9	Notification requirements	Applicability and state delegation	Yes	Except for subsections of § 63.9 as listed below.
§ 63.9(b)(2)	Notification requirements	Initial notification requirements for existing sources.	No	Section 63.2860(a) of subpart GGGG specifies the requirements of the initial notification for existing sources.
§ 63.9(b)(3)–(5)	Notification requirements	Notification requirement for certain new/reconstructed sources.	Yes	Except the information requirements differ as described in § 63.2860(b) of subpart GGGG.
§ 63.9(e)	Notification of performance test	Notify responsible agency 60 days ahead.	Yes	Applies only if performance testing is performed.
§ 63.9(f)	Notification of VE/opacity observations.	Notify responsible agency 30 days ahead.	No	Subpart GGGG has no opacity or VE standards.
§ 63.9(g)	Additional notifications when using a continuous monitoring system (CMS).	Notification of performance evaluation; Notification using COMS data; notification that exceeded criterion for relative accuracy.	No	Subpart GGGG has no CMS requirements.
§ 63.9(h)	Notification of compliance status	Contents	No	Section 63.2860(d) of subpart GGGG specifies requirements for the notification of compliance status.
§ 63.10	Recordkeeping/reporting	Schedule for reporting, record storage	Yes	Except for subsections of § 63.10 as listed below.
§ 63.10(b)(2)(i)	Recordkeeping	Record SSM event	Yes	Applicable to periods when sources must implement their SSM plan as specified in subpart GGGG.
§ 63.10(b)(2)(ii)–(iii)	Recordkeeping	Malfunction of air pollution equipment	No	Applies only if air pollution control equipment has been added to the process and is necessary for the source to meet the emission limit.
§ 63.10(b)(2)(vi)	Recordkeeping	CMS recordkeeping	No	Subpart GGGG has no CMS requirements.
§ 63.10(b)(2)(viii)–(ix)	Recordkeeping	Conditions of performance test	Yes	Applies only if performance tests are performed. Subpart GGGG does not have any CMS opacity or VE observation requirements.

§ 63.10(b)(2)(x)–(xii)	Recordkeeping	CMS, performance testing, and opacity and VE observations recordkeeping.	No	Subpart GGGG does not require CMS.
§ 63.10(c)	Recordkeeping	Additional CMS recordkeeping	No	Subpart GGGG does not require CMS.
§ 63.10(d)(2)	Reporting	Reporting performance test results	Yes	Applies only if performance testing is performed.
§ 63.10(d)(3)	Reporting	Reporting opacity or VE observations	No	Subpart GGGG has no opacity or VE standards.
§ 63.10(d)(4)	Reporting	Progress reports	Yes	Applies only if a condition of compliance extension exists.
§ 63.10(d)(5)	Reporting	SSM reporting	No	Section 63.2861(c) and (d) specify SSM reporting requirements.
§ 63.10(e)	Reporting	Additional CMS reports	No	Subpart GGGG does not require CMS.
§ 63.11	Control device requirements	Requirements for flares	Yes	Applies only if your source uses a flare to control solvent emissions. Subpart GGGG does not require flares.
§ 63.12	State authority and delegations	State authority to enforce standards	Yes	
§ 63.13	State/regional addresses	Addresses where reports, notifications, and requests are sent.	Yes	
§ 63.14	Incorporation by reference	Test methods incorporated by reference.	Yes	
§ 63.15	Availability of information and confidentiality.	Public and confidential information	Yes	

[66 FR 19011, Apr. 12, 2001, as amended at 67 FR 16321, Apr. 5, 2002]

§ 63.2871 Who implements and enforces this subpart?

(a) This subpart can be implemented by us, the U.S. EPA, or a delegated authority such as your State, local, or tribal agency. If the U.S. EPA Administrator has delegated authority to your State, local, or tribal agency, then that agency, as well as the U.S. EPA, has the authority to implement and enforce this subpart. You should contact your U.S. EPA Regional Office to find out if this subpart is delegated to your State, local, or tribal agency.

(b) In delegating implementation and enforcement authority of this subpart to a State, local, or tribal agency under section 40 CFR part 63, subpart E, the authorities contained in paragraph (c) of this section are retained by the Administrator of the U.S. EPA and are not transferred to the State, local, or tribal agency.

(c) The authorities that will not be delegated to State, local, or tribal agencies are as follows:

(1) Approval of alternative nonopacity emissions standards under § 63.6(g).

(2) Approval of alternative opacity standards under § 63.6(h)(9).

(3) Approval of major alternatives to test methods under § 63.7(e)(2)(ii) and (f) and as defined in § 63.90.

(4) Approval of major alternatives to monitoring under § 63.8(f) and as defined in § 63.90.

(5) Approval of major alternatives to recordkeeping and reporting under § 63.10(f) and as defined in § 63.90.

§ 63.2872 What definitions apply to this subpart?

Terms used in this subpart are defined in the sources listed:

(a) The Clean Air Act, section 112(a).

(b) In 40 CFR 63.2, the NESHAP General Provisions.

(c) In this section as follows:

Accounting month means a time interval defined by a business firm during which corporate economic and financial factors are determined on a consistent and regular basis. An accounting month will consist of approximately 4 to 5 calendar weeks and each accounting month will be of approximate equal duration. An accounting month may not correspond exactly to a calendar month, but 12 accounting months will correspond exactly to a calendar year.

Actual solvent loss means the gallons of solvent lost from a source during 12 operating months as determined in accordance with § 63.2853.

Agricultural product means any commercially grown plant or plant product.

Allowable HAP loss means the gallons of HAP that would have been lost from a source if the source was operating at the solvent loss factor for each listed oilseed type. The allowable HAP loss in gallons is determined by multiplying the tons of each oilseed type processed during the previous 12 operating months, as determined in accordance with § 63.2855, by the corresponding oilseed solvent loss factor (gal/ton) listed in Table 1 of § 63.2840, and by the dimensionless constant 0.64, and summing the result for all oilseed types processed.

Area source means any source that does not meet the major source definition.

As received is the basis upon which all oilseed measurements must be determined and refers to the oilseed chemical and physical characteristics as initially received by the source and prior to any oilseed handling and processing.

Batch operation means any process that operates in a manner where the addition of raw material and withdrawal of product do not occur simultaneously. Typically, raw material is added to a process, operational steps occur, and a product is removed from the process. More raw material is then added to the process and the cycle repeats.

Calendar month means 1 month as specified in a calendar.

Compliance date means the date on which monthly compliance recordkeeping begins. For existing sources, recordkeeping typically begins 3 years after the effective date of the subpart. For new and reconstructed sources, recordkeeping typically begins upon initial startup, except as noted in § 63.2834.

Compliance ratio means a ratio of the actual HAP loss in gallons from the

previous 12 operating months to an allowable HAP loss in gallons, which is determined by using oilseed solvent loss factors in Table 1 of §63.2840, the weighted average volume fraction of HAP in solvent received for the previous 12 operating months, and the tons of each type of listed oilseed processed in the previous 12 operating months. Months during which no listed oilseed is processed, or months during which the §63.2850(c)(2) or (d)(2) initial startup period or the §63.2850(e)(2) malfunction period applies, are excluded from this calculation. Equation 2 of §63.2840 is used to calculate this value. If the value is less than or equal to 1.00, the source is in compliance. If the value is greater than 1.00, the source is deviating from compliance.

Continuous operation means any process that adds raw material and withdraws product simultaneously. Mass, temperature, concentration and other properties typically approach steady-state conditions.

Conventional desolventizer means a desolventizer toaster that operates with indirect and direct-contact steam to remove solvent from the extracted meal. Oilseeds processed in a conventional desolventizer produce crude vegetable oil and crude meal products, such as animal feed.

Corn germ dry milling means a source that processes corn germ that has been separated from the other corn components using a ''dry'' process of mechanical chafing and air sifting.

Corn germ wet milling means a source that processes corn germ that has been separated from other corn components using a ''wet'' process of centrifuging a slurry steeped in a dilute sulfurous acid solution.

Exempt period means a period of time during which a source processes agricultural products not defined as listed oilseed.

Extraction solvent means an organic chemical medium used to remove oil from an oilseed. Typically, the extraction solvent is a commercial grade of hexane isomers which have an approximate HAP content of 64 percent by volume.

Hazardous air pollutant (HAP) means any substance or mixture of substances listed as a hazardous air pollutant under section 112(b) of the Clean Air Act, as of April 12, 2001.

Initial startup date means the first calendar day that a new, reconstructed or significantly modified source processes any listed oilseed.

Initial startup period means a period of time from the initial startup date of a new, reconstructed or significantly modified source, for which you choose to operate the source under an initial startup period subject to §63.2850(c)(2) or (d)(2). During an initial startup period, a source is in compliance with the standards by following the operating and maintenance procedures listed for minimizing HAP emissions in the source's SSM plan rather than being subject to a HAP emission limit. The initial startup period following initial startup of a new or reconstructed source may not exceed 6 calendar months. The initial startup period following a significant modification may not exceed 3 calendar months. Solvent and oilseed inventory information recorded during the initial startup period is excluded from use in any compliance ratio determinations.

Large cottonseed plant means a vegetable oil production process that processes 120,000 tons or more of cottonseed and other listed oilseed during all normal operating periods in a 12 operating months period used to determine compliance.

Malfunction period means a period of time between the beginning and end of a process malfunction and the time reasonably necessary for a source to correct the malfunction for which you choose to operate the source under a malfunction period subject to §63.2850(e)(2). This period may include the duration of an unscheduled process shutdown, continued operation during a malfunction, or the subsequent process startup after a shutdown resulting from a malfunction. During a malfunction period, a source complies with the standards by following the operating and maintenance procedures described for minimizing HAP emissions in the source's SSM plan rather than being subject to a HAP emission limit. Therefore, solvent and oilseed inventory information recorded during a malfunction period is excluded from

use in any compliance ratio determinations.

Mechanical extraction means removing vegetable oil from oilseeds using only mechanical devices such as presses or screws that physically force the oil from the oilseed. Mechanical extraction techniques use no organic solvents to remove oil from an oilseed.

Nonoperating period means any period of time in which a source processes no agricultural product. This operating status does not apply during any period in which the source operates under an initial startup period as described in § 63.2850(c)(2) or (d)(2), or a malfunction period, as described in § 63.2850(e)(2).

Normal operating period means any period of time in which a source processes a listed oilseed that is not categorized as an initial startup period as described in § 63.2850(c)(2) or (d)(2), or a malfunction period, as described in § 63.2850(e)(2). At the beginning and ending dates of a normal operating period, solvent and oilseed inventory information is recorded and included in the compliance ratio determination.

Oilseed or listed oilseed means the following agricultural products: corn germ, cottonseed, flax, peanut, rapeseed (for example, canola), safflower, soybean, and sunflower.

Oilseed solvent loss factor means a ratio expressed as gallons of solvent loss per ton of oilseed processed. The solvent loss factors are presented in Table 1 of § 63.2840 and are used to determine the allowable HAP loss.

Operating month means any calendar or accounting month in which a source processes any quantity of listed oilseed, excluding any entire calendar or accounting month in which the source operated under an initial startup period as described in § 63.2850(c)(2) or (d)(2), or a malfunction period as described in § 63.2850(e)(2). An operating month may include time intervals characterized by several types of operating status. However, an operating month must have at least one normal operating period.

Significant modification means the addition of new equipment or the modification of existing equipment that:

(1) Significantly affects solvent losses from your vegetable oil production process;

(2) The fixed capital cost of the new components represents a significant percentage of the fixed capital cost of building a comparable new vegetable oil production process;

(3) The fixed capital cost of the new equipment does not constitute reconstruction as defined in § 63.2; and

(4) Examples of significant modifications include replacement of or major changes to solvent recovery equipment such as extractors, desolventizer-toasters/dryer-coolers, flash desolventizers, and distillation equipment associated with the mineral oil system, and equipment affecting desolventizing efficiency and steady-state operation of your vegetable oil production process such as flaking mills, oilseed heating and conditioning equipment, and cracking mills.

Small cottonseed plant means a vegetable oil production process that processes less than 120,000 tons of cottonseed and other listed oilseed during all normal operating periods in a 12 operating months period used to determine compliance.

Solvent extraction means removing vegetable oil from listed oilseed using an organic solvent in a direct-contact system.

Solvent working capacity means the volume of extraction solvent normally retained in solvent recovery equipment. Examples include components such as the solvent extractor, desolventizer-toaster, solvent storage and working tanks, mineral oil absorption system, condensers, and oil/solvent distillation system.

Specialty desolventizer means a desolventizer that removes excess solvent from soybean meal using vacuum conditions, energy from superheated solvent vapors, or reduced operating conditions (e.g., temperature) as compared to the typical operation of a conventional desolventizer. Soybeans processed in a specialty desolventizer result in high-protein vegetable meal products for human and animal consumption, such as calf milk replacement products and meat extender products.

Vegetable oil production process means the equipment comprising a continuous process for producing crude vegetable

oil and meal products, including specialty soybean products, in which oil is removed from listed oilseeds through direct contact with an organic solvent. Process equipment typically includes the following components: oilseed preparation operations (including conditioning, drying, dehulling, and cracking), solvent extractors, desolventizer-toasters, meal dryers, meal coolers, meal conveyor systems, oil distillation units, solvent evaporators and condensers, solvent recovery system (also referred to as a mineral oil absorption system), vessels storing solvent-laden materials, and crude meal packaging and storage vessels. A vegetable oil production process does not include vegetable oil refining operations (including operations such as bleaching, hydrogenation, and deodorizing) and operations that engage in additional chemical treatment of crude soybean meals produced in specialty desolventizer units (including operations such as soybean isolate production).

Subpart HHHH—National Emission Standards for Hazardous Air Pollutants for Wet-Formed Fiberglass Mat Production

SOURCE: 67 FR 17835, Apr. 11, 2002, unless otherwise noted.

WHAT THIS SUBPART COVERS

§63.2980 What is the purpose of this subpart?

This subpart establishes national emission standards for hazardous air pollutants (NESHAP) for emissions from facilities that produce wet-formed fiberglass mat. This subpart also establishes requirements to demonstrate initial and continuous compliance with the emission limitations.

§63.2981 Does this subpart apply to me?

You must comply with this subpart if you meet the criteria in paragraphs (a) and (b) of this section:

(a) You own or operate a drying and curing oven at a wet-formed fiberglass mat production facility.

(b) Your drying and curing oven or the facility at which your drying and curing oven is located is a major source of hazardous air pollutants (HAP). A major source is any stationary source or group of stationary sources located within a contiguous area and under common control that emits or can potentially emit, considering controls, in the aggregate, 9.07 megagrams (10 tons) or more per year of a single HAP or 22.68 megagrams (25 tons) or more per year of any combination of HAP.

§63.2982 What parts of my plant does this subpart cover?

(a) This subpart applies to each new, reconstructed, or existing affected source. The affected source (the portion of your plant covered by this subpart) is each wet-formed fiberglass mat drying and curing oven.

(b) An affected source is a new affected source if you commenced construction of the affected source after May 26, 2000, and you meet the applicability criteria in §63.2981 at start-up.

(c) An affected source is reconstructed if you meet the criteria as defined in §63.2.

(d) An affected source is existing if it is not new or reconstructed.

EMISSION LIMITATIONS

§63.2983 What emission limits must I meet?

(a) You must limit the formaldehyde emissions from each drying and curing oven by either:

(1) Limiting emissions of formaldehyde to 0.03 kilograms or less per megagram (0.05 pounds per ton) of fiberglass mat produced; or

(2) Reducing uncontrolled formaldehyde emissions by 96 percent or more.

(b) [Reserved]

§63.2984 What operating limits must I meet?

(a) You must maintain operating parameters within established limits or ranges specified in your operation, maintenance, and monitoring (OMM) plan described in §63.2987. If there is a deviation of any of the specified parameters from the limit or range specified in the OMM plan, you must address the deviation according to paragraph (b) of this section. You must

comply with the operating limits specified in paragraphs (a)(1) through (4) of this section:

(1) You must operate the thermal oxidizer so that the average operating temperature in any 3-hour block period does not fall below the temperature established during your performance test and specified in your OMM plan.

(2) You must not use a resin with a free-formaldehyde content greater than that of the resin used during your performance test and specified in your OMM plan.

(3) You must operate the wet-formed fiberglass mat production process so that the average urea formaldehyde resin solids application rate in any 3-hour block period does not exceed the average application rate achieved during your performance test and specified in your OMM plan.

(4) If you use an add-on control device other than a thermal oxidizer or wish to monitor an alternative parameter and comply with a different operating limit, you must obtain approval for the alternative monitoring under § 63.8(f). You must include the approved alternative monitoring and operating limits in the OMM plan specified in § 63.2987.

(b) When during a period of normal operations you detect that an operating parameter deviates from the limit or range established in paragraph (a) of this section, you must initiate corrective actions within 1 hour according to the provisions of your OMM plan. During periods of start up, shut down, or malfunction you must follow your start up, shut down and malfunction plan (SSMP). The corrective action actions must be completed in an expeditious manner as specified in the OMM plan or SSMP.

(c) You must maintain and inspect control devices according to the procedures specified in the OMM plan.

(d) You must include the operating limits specified in paragraphs (a)(1) through (4) of this section and their allowable ranges or levels in your OMM plan. Your 40 CFR part 70 operating permit for the drying and curing oven must contain a requirement that you develop and operate according to an OMM plan at all times.

(e) If you use a thermal oxidizer or other control device to achieve the emission limits in § 63.2983, you must capture and convey the formaldehyde emissions from each drying and curing oven according to the procedures in chapters 3 and 5 of ''Industrial Ventilation: A Manual of Recommended Practice'' (23rd Edition). This publication is incorporated by reference in § 63.3003.

§ 63.2985 When do I have to comply with these standards?

(a) Existing drying and curing ovens must be in compliance with this subpart no later than April 11, 2005.

(b) New or reconstructed drying and curing ovens must be in compliance with this subpart at startup or by April 11, 2002, whichever is later.

(c) If your facility is an area source that increases its emissions or its potential to emit such that it becomes a major source of hazardous air pollutants, the following apply:

(1) Any portion of the existing facility that is a new affected source or a new reconstructed affected source must be in compliance upon startup.

(2) All other parts of the source must be in compliance with this subpart 1 year after becoming a major source or by April 11, 2005, whichever is later.

§ 63.2986 How do I comply with the standards?

(a) You must install, maintain, and operate a thermal oxidizer or other control device or implement a process modification that reduces formaldehyde emissions from each drying and curing oven to the emission limits specified in § 63.2983.

(b) You must comply with the operating limits specified in § 63.2984. The operating limits prescribe the requirements for demonstrating continuous compliance based on the OMM plan. You must begin complying with the operating limits on the date by which you must complete the initial performance test.

(c) You must conduct a performance test according to §§ 63.2991, 63.2992, and 63.2993 to demonstrate compliance for each drying and curing oven subject to the emission limits in § 63.2983, and to

establish or modify the operating limits or ranges for process or control device parameters that will be monitored to demonstrate continuous compliance.

(d) You must install, calibrate, maintain, and operate devices that monitor the parameters specified in your OMM plan at the frequency specified in the plan. All continuous parameter monitoring systems must be installed and operating no later than the applicable compliance date specified in § 63.2985.

(e) You must prepare and follow a written OMM plan as specified in § 63.2987.

(f) You must comply with the monitoring, recordkeeping, notification, and reporting requirements of this subpart as required by §§ 63.2996 through 63.3000.

(g) You must comply with the requirements in paragraphs (g)(1) through (3) of this section.

(1) You must be in compliance with the emission limits in § 63.2983 and the operating limits in § 63.2984 at all times, except during periods of startup, shutdown, or malfunction.

(2) You must always operate and maintain your affected source, including air pollution control and monitoring equipment, according to the provisions in § 63.6(e)(1).

(3) You must develop and implement a written SSMP according to the provisions in § 63.6(e)(3). The SSMP must address the startup, shutdown, and corrective actions taken for malfunctioning process and air pollution control equipment.

OPERATION, MAINTENANCE, AND MONITORING PLAN

§ 63.2987 What must my operation, maintenance, and monitoring (OMM) plan include?

(a) You must prescribe the monitoring that will be performed to ensure compliance with these emission limitations. Minimum monitoring requirements are listed in table 1 of this subpart. Your plan must specify the items listed in paragraphs (a)(1) through (3) of this section:

(1) Each process and control device to be monitored, the type of monitoring device that will be used, and the operating parameters that will be monitored.

(2) A monitoring schedule that specifies the frequency that the parameter values will be determined and recorded.

(3) The operating limits or ranges for each parameter that represent continuous compliance with the emission limits in § 63.2983. Operating limits and ranges must be based on values of the monitored parameters recorded during performance tests.

(b) You must establish routine and long-term maintenance and inspection schedules for each control device. You must incorporate in the schedules the control device manufacturer's recommendations for maintenance and inspections or equivalent procedures. If you use a thermal oxidizer, the maintenance schedule must include procedures for annual or more frequent inspection of the thermal oxidizer to ensure that the structural and design integrity of the combustion chamber is maintained. At a minimum, you must meet the requirements of paragraphs (b)(1) through (10) of this section:

(1) Inspect all burners, pilot assemblies, and pilot sensing devices for proper operation. Clean pilot sensor if necessary.

(2) Ensure proper adjustment of combustion air and adjust if necessary.

(3) Inspect, when possible, all internal structures (such as baffles) to ensure structural integrity per the design specifications.

(4) Inspect dampers, fans, and blowers for proper operation.

(5) Inspect motors for proper operation.

(6) Inspect, when possible, combustion chamber refractory lining. Clean and repair or replace lining if necessary.

(7) Inspect the thermal oxidizer shell for proper sealing, corrosion, and hot spots.

(8) For the burn cycle that follows the inspection, document that the thermal oxidizer is operating properly and make any necessary adjustments.

(9) Generally observe whether the equipment is maintained in good operating condition.

(10) Complete all necessary repairs as soon as practicable.

(c) You must establish procedures for responding to operating parameter deviations. At a minimum, the procedures must include the information in paragraphs (c)(1) through (3) of this section.

(1) Procedures for determining the cause of the operating parameter deviation.

(2) Actions for correcting the deviation and returning the operating parameters to the allowable ranges or limits.

(3) Procedures for recording the date and time that the deviation began and ended, and the times corrective actions were initiated and completed.

(d) Your plan must specify the recordkeeping procedures to document compliance with the emissions and operating limits. Table 1 of this subpart establishes the minimum recordkeeping requirements.

§ 63.2988 [Reserved]

§ 63.2989 How do I change my OMM plan?

Changes to the operating limits or ranges in your OMM plan require a new performance test.

(a) In order to revise the ranges or levels established for your operating limits in § 63.2984, you must meet the requirements in paragraphs (a)(1) and (2) of this section:

(1) Submit a notification of performance test to the Administrator as specified in § 63.7(b) to revise your operating ranges or limits.

(2) After completing the performance test to demonstrate that compliance with the emissions limits can be achieved at the revised levels of the operating limits, you must submit the performance test results and the revised operating limits as part of the notification of compliance status required under § 63.9(h).

(b) If you are revising the inspection and maintenance procedures in your plan that are specified in § 63.2987(b), you do not need to conduct a new performance test.

(c) If you plan to operate your process or control device under alternative operating conditions and do not wish to revise your OMM plan when you change operating conditions, you can perform a separate compliance test to establish operating limits for each condition. You can then include the operating limits for each condition in your OMM plan. After completing the performance tests, you must record the date and time when you change operations from one condition to another, the condition under which you are operating, and the operating limits that apply under that condition. If you can perform a single performance test that establishes the most stringent operating limits that cover all alternative operating conditions, then you do not need to comply with the provisions of this paragraph.

§ 63.2990 Can I conduct short-term experimental production runs that cause parameters to deviate from operating limits?

With the approval of the Administrator, you may conduct short-term experimental production runs during which your operating parameters deviate from the operating limits. Experimental runs may include, but are not limited to, runs using resin with a higher free-formaldehyde content than specified in the OMM plan, or using experimental pollution prevention techniques. To conduct a short-term experimental production run, you must complete the requirements in paragraphs (a) and (b) of this section.

(a) Prepare an application to the Administrator for approval to conduct the experimental production runs. Your application must include the items listed in paragraphs (a)(1) through (6) of this section.

(1) The purpose of the experimental production run.

(2) Identification of the affected line.

(3) An explanation of how the operating parameters will deviate from the previously approved ranges and limits.

(4) The duration of the experimental production run.

(5) The date and time of the experimental production run.

(6) A description of any emission testing to be performed during the experimental production run.

(b) Submit the application to the Administrator for approval at least 30 days before you conduct the experimental production run.

(c) If you conduct such experimental production runs without first receiving approval from the Administrator, then you must conduct a performance test under those same experimental production run conditions to show that you were in compliance with the formaldehyde emission limits in § 63.2983.

TESTING AND INITIAL COMPLIANCE REQUIREMENTS

§ 63.2991 When must I conduct performance tests?

You must conduct a performance test for each drying and curing oven subject to this subpart according to the provisions in paragraphs (a) through (c) of this section:

(a) *Initially*. You must conduct an initial performance test no later than 180 days after the applicable compliance date specified in § 63.2985. The initial performance test is used to demonstrate initial compliance and establish operating parameter limits and ranges to be used to demonstrate continuous compliance with the emission standards.

(b) *Every 5 years*. You must conduct a performance test every 5 years as part of renewing your 40 CFR part 70 operating permit.

(c) *To change your OMM plan*. You must conduct a performance test according to the requirements specified in § 63.2992 to change the limit or range for any operating limit specified in your OMM plan established during a previous compliance test.

§ 63.2992 How do I conduct a performance test?

(a) You must verify the performance of monitoring equipment as specified in § 63.2994 before performing the test.

(b) You must conduct the performance test according to the procedures in § 63.7.

(c) You must conduct the performance test under the conditions specified in paragraphs (c)(1) and (2) of this section.

(1) The resin must have the highest specified free-formaldehyde content that will be used.

(2) You must operate at the maximum feasible urea-formaldehyde resin solids application rate (pounds urea-formaldehyde resin solids applied per hour) that will be used.

(d) During the performance test, you must monitor and record the operating parameters that you will use to demonstrate continuous compliance after the test. These parameters are listed in table 1 of this subpart.

(e) You may not conduct performance tests during periods of startup, shutdown, or malfunction as specified in § 63.7(e)(1).

(f) You must conduct three separate test runs for each performance test as specified in § 63.7(e)(3), and each test run must last at least 1 hour.

§ 63.2993 What test methods must I use in conducting performance tests?

(a) Use EPA Method 1 (40 CFR part 60, appendix A) for selecting the sampling port location and the number of sampling ports.

(b) Use EPA Method 2 (40 CFR part 60, appendix A) for measuring the volumetric flow rate.

(c) Use EPA Method 316 or 318 (40 CFR part 63, appendix A) for measuring the concentration of formaldehyde.

(d) Use the method contained in appendix A of this subpart or the resin purchase specification and the vendor specification sheet for each resin lot for determining the free-formaldehyde content in the urea-formaldehyde resin.

(e) Use the method in appendix B of this subpart for determining product loss-on-ignition.

§ 63.2994 How do I verify the performance of monitoring equipment?

(a) Before conducting the performance test, you must take the steps listed in paragraphs (a)(1) and (2) of this section:

(1) Install and calibrate all process equipment, control devices, and monitoring equipment.

(2) Conduct a performance evaluation of the continuous monitoring system (CMS) according to § 63.8(e) which specifies the general requirements and requirements for notifications, the site-specific performance evaluation plan, conduct of the performance evaluation, and reporting of performance evaluation results.

(b) If you use a thermal oxidizer, the temperature monitoring device must meet the performance and equipment specifications listed in paragraphs (b)(1) through (3) of this section:

(1) The temperature monitoring device must be installed either at the exit of the combustion zone of each thermal oxidizer, or at the location specified by the manufacturer. The temperature monitoring device must also be installed in a location before any heat recovery or heat exchange equipment, and it must remain in the same location for both the performance test and the continuous monitoring of temperature.

(2) The recorder response range must include zero and 1.5 times the average temperature required in § 63.2984(a)(1).

(3) The measurement method or reference method for calibration must be a National Institute of Standards and Technology calibrated reference thermocouple-potentiometer system or an alternate reference subject to the approval of the Administrator.

§ 63.2995 What equations must I use to determine compliance?

(a) *Percent reduction for formaldehyde.* To determine compliance with the percent reduction formaldehyde emission standard, use equation 1 of this section as follows:

$$E_f = \frac{M_i - M_o}{M_i} \times 100 \qquad \text{(Eq. 1)}$$

Where:

E_f = Formaldehyde control efficiency, percent.

M_i = Mass flow rate of formaldehyde entering the control device, kilograms (pounds) per hour.

M_o = Mass flow rate of formaldehyde exiting the control device, kilograms (pounds) per hour.

(b) *Formaldehyde mass emissions rate.* To determine compliance with the kilogram per megagram (pound per ton) formaldehyde emission standard, use equation 2 of this section as follows:

$$E = \frac{M}{P} \qquad \text{(Eq. 2)}$$

Where:

E = Formaldehyde mass emissions rate, kilograms (pounds) of formaldehyde per megagram (ton) of fiberglass mat produced.

M = Formaldehyde mass emissions rate, kilograms (pounds) per hour.

P = The wet-formed fiberglass mat production rate during the emissions sampling period, including any material trimmed from the final product, megagrams (tons) per hour.

(c) *Urea-formaldehyde (UF) resin solids application rate.* To determine the UF resin solids application rate, use equation 3 of this section as follows:

$$\frac{\text{UF Solids}}{\text{Hour}} = LOI \times UFL \times MW \times SQ \qquad \text{(Eq. 3)}$$

Where:

UF solids/hour = UF resin solids application rate (pounds per hour).

LOI = loss on ignition (weight faction), or pound of organic binder per pound of mat.

UFL = UF-to-latex ratio in the binder (mass fraction of UF resin solids in total combined resin solids for UF and latex), or pound of UF solids per pound of total resin solids (UF and latex).

MW = weight of the final mat per square (pounds per roofing square).

SQ = roofing squares produced per hour.

MONITORING REQUIREMENTS

§ 63.2996 What must I monitor?

You must monitor the parameters listed in table 1 of this subpart and any other parameters specified in your OMM plan. The parameters must be

monitored, at a minimum, at the corresponding frequencies listed in table 1 of this subpart.

§ 63.2997 What are the requirements for monitoring devices?

(a) If formaldehyde emissions are controlled using a thermal oxidizer, you must meet the requirements in paragraphs (a)(1) and (2) of this section:

(1) Install, calibrate, maintain, and operate a device to monitor and record continuously the thermal oxidizer temperature at the exit of the combustion zone before any substantial heat exchange occurs or at the location consistent with the manufacturer's recommendations.

(2) Continuously monitor the thermal oxidizer temperature and determine and record the average temperature in 15-minute and 3-hour block averages. You may determine the average temperature more frequently than every 15 minutes and every 3 hours, but not less frequently.

(b) If formaldehyde emissions are controlled by process modifications or a control device other than a thermal oxidizer, you must install, calibrate, maintain, and operate devices to monitor the parameters established in your OMM plan at the frequency established in the plan.

NOTIFICATIONS, REPORTS, AND RECORDS

§ 63.2998 What records must I maintain?

You must maintain records according to the procedures of § 63.10. You must maintain the records listed in paragraphs (a) through (g) of this section.

(a) All records required by § 63.10. Table 2 of this subpart presents the applicable requirements of the general provisions.

(b) The OMM plan.

(c) Records of values of monitored parameters listed in table 1 of this subpart to show continuous compliance with each operating limit specified in table 1 of this subpart.

(d) Records of maintenance and inspections performed on the control devices.

(e) If an operating parameter deviation occurs, you must record:

(1) The date, time, and duration of the operating parameter deviation;

(2) A brief description of the cause of the operating parameter deviation;

(3) The dates and times at which corrective actions were initiated and completed;

(4) A brief description of the corrective actions taken to return the parameter to the limit or to within the range specified in the OMM plan; and

(5) A record of whether the deviation occurred during a period of startup, shutdown, or malfunction.

(f) Keep all records specified in § 63.6(e)(3)(iii) through (v) related to startup, shutdown, and malfunction.

(g) If you operate your process or control device under alternative operating condition and have established operating limits for each condition as specified in § 63.2989(c), then you must keep records of the date and time you changed operations from one condition to another, the condition under which you are operating, and the applicable operating limits for that condition.

§ 63.2999 In what form and for how long must I maintain records?

(a) You must maintain each record required by this subpart for 5 years. You must maintain the most recent 2 years of records at the facility. The remaining 3 years of records may be retained offsite.

(b) Your records must be readily available and in a form so they can be easily inspected and reviewed. You can keep the records on paper or an alternative media, such as microfilm, computer, computer disks, magnetic tape, or on microfiche.

§ 63.3000 What notifications and reports must I submit?

(a) You must submit all notifications and reports required by the applicable general provisions and this section. Table 2 of this subpart presents the applicable requirements of the general provisions.

(b) *Notification of compliance status.* You must submit the notification of compliance status, including the performance test results, the operating limits or ranges as determined during the performance test, and other information specified in § 63.9(h), before the close of business on the 60th calendar

day after you complete the performance test according to § 63.10(d)(2).

(c) *Semiannual compliance reports.* You must submit semiannual compliance reports according to the requirements of paragraphs (c)(1) through (5) of this section.

(1) *Dates for submitting reports.* Unless the Administrator has agreed to a different schedule for submitting reports under § 63.10(a), you must deliver or postmark each semiannual compliance report no later than 30 days following the end of each semiannual reporting period. The first semiannual reporting period begins on the compliance date for your affected source and ends on June 30 or December 31, whichever date immediately follows your compliance date. Each subsequent semiannual reporting period for which you must submit a semiannual compliance report begins on July 1 or January 1 and ends 6 calendar months later. As required by § 63.10(e)(3), you must begin submitting quarterly compliance reports if you deviate from the emission limits in § 63.2983 or the operating limits in § 63.2984.

(2) *Inclusion with title V report.* For each affected source that is subject to permitting regulations pursuant to 40 CFR part 70 or 71, and for which the permitting authority has established dates for submitting semiannual reports pursuant to 40 CFR 70.6(a)(3)(iii)(A) or 71.6 (a)(3)(iii)(A), you may submit the first and subsequent compliance reports according to the dates the permitting authority has established instead of according to the dates in paragraph (c)(1) of this section.

(3) *Contents of reports.* The semiannual compliance report must contain the information in paragraphs (c)(3)(i) through (vi) of this section:

(i) Company name and address.

(ii) Statement by a responsible official with that official's name, title, and signature, certifying the truth, accuracy, and completeness of the content of the report.

(iii) Date of report and beginning and ending dates of the reporting period.

(iv) A summary of the total duration of continuous parameter monitoring system downtime during the semiannual reporting period and the total duration of continuous parameter monitoring system downtime as a percent of the total source operating time during that semiannual reporting period.

(v) The date of the latest continuous parameter monitoring system certification or audit.

(vi) A description of any changes in the wet-formed fiberglass mat manufacturing process, continuous parameter monitoring system, or add-on control device since the last semiannual reporting period.

(4) *No deviations.* If there were no deviations from the emission limit in § 63.2983 or the operating limits in § 63.2984, the semiannual compliance report must include a statement to that effect. If there were no periods during which the continuous parameter monitoring systems were out-of-control as specified in § 63.8(c)(7), the semiannual compliance report must include a statement to that effect.

(5) *Deviations.* If there was a deviation from the emission limit in § 63.2983 or an operating limit in § 63.2984, the semiannual compliance report must contain the information in paragraphs (c)(5)(i) through (ix) of this section:

(i) The date and time that each malfunction started and stopped.

(ii) The date and time that each continuous parameter monitoring system was inoperative, except for zero (low-level) and high-level checks.

(iii) The date, time, and duration that each continuous parameter monitoring system was out-of-control, including the information in § 63.8(c)(8).

(iv) The date and time that each deviation started and stopped, and whether each deviation occurred during a period of startup, shutdown, or malfunction or during another period.

(v) The date and time that corrective actions were taken, a description of the cause of the deviation, and a description of the corrective actions taken.

(vi) A summary of the total duration of each deviation during the semiannual reporting period and the total duration as a percent of the total source operating time during that semiannual reporting period.

(vii) A breakdown of the total duration of the deviations during the semiannual reporting period into those that

were due to startup, shutdown, control equipment problems, process problems, other known causes, and other unknown causes.

(viii) A brief description of the process units.

(ix) A brief description of the continuous parameter monitoring system.

(d) *Performance test reports*. You must submit reports of performance test results for add-on control devices no later than 60 days after completing the tests as specified in § 63.10(d)(2). You must include in the performance test reports the values measured during the performance test for the parameters listed in table 1 of this subpart and the operating limits or ranges to be included in your OMM plan. For the thermal oxidizer temperature, you must include 15-minute averages and the average for the three 1-hour test runs.

(e) *Startup, shutdown, malfunction reports*. If you have a startup, shutdown, or malfunction during the semiannual reporting period, you must submit the reports specified § ;63.10(d)(5).

OTHER REQUIREMENTS AND INFORMATION

§ 63.3001 What sections of the general provisions apply to me?

You must comply with the requirements of the general provisions of 40 CFR part 63, subpart A, as specified in table 2 of this subpart.

§ 63.3002 Who implements and enforces this subpart?

(a) This subpart can be implemented and enforced by the U.S. EPA or a delegated authority, such as your State, local, or tribal agency. If the Administrator has delegated authority to your State, local, or tribal agency, then that agency is the primary enforcement authority. If the Administrator has not delegated authority to your State, only EPA enforces this subpart. You should contact your U.S. EPA Regional Office to find out if implementation and enforcement of this subpart is delegated to your State, local, or tribal agency.

(b) In delegating implementation and enforcement authority of this subpart to a State, local, or tribal agency under section 40 CFR part 63, subpart E, the authorities contained in paragraphs (b)(1) through (4) of this section are retained by the Administrator of U.S. EPA and are not transferred to the State, local, or tribal agency.

(1) The authority under § 63.6(g) to approve alternatives to the emission limits in § 63.2983 and operating limits in § 63.2984 is not delegated.

(2) The authority under § 63.7(e)(2)(ii) and (f) to approve of major alternatives (as defined in § 63.90) to the test methods in § 63.2993 is not delegated.

(3) The authority under § 63.8(f) to approve major alternatives (as defined in § 63.90) to the monitoring requirements in §§ 63.2996 and 63.2997 is not delegated.

(4) The authority under § 63.10(f) to approve major alternatives (as defined in § 63.90) to recordkeeping, notification, and reporting requirements in §§ 63.2998 through 63.3000 is not delegated.

§ 63.3003 Incorporation by reference.

(a) The following material is incorporated by reference and referred to at § 63.2984: chapters 3 and 5 of ''Industrial Ventilation: A Manual of Recommended Practice,'' American Conference of Governmental Industrial Hygienists, (23rd edition, 1998). The incorporation by reference of this material is approved by the Director of the Office of the Federal Register as of the date of publication of the final rule according to 5 U.S.C. 552(a) and 1 CFR part 51. This material is incorporated as it exists on the date of approval and notice of any change in the material will be published in the FEDERAL REGISTER.

(b) The materials referenced in this section are incorporated by reference and are available for inspection at the Office of the Federal Register, 800 North Capitol Street NW, Suite 700, 7th Floor, Washington, DC; and at the Air and Radiation Docket and Information Center, U.S. EPA, 401 M Street SW, Washington, DC. The material is also available for purchase from the following address: Customer Service Department, American Conference of Governmental Industrial Hygienists (ACGIH), 1330 Kemper Meadow Drive, Cincinnati, OH 45240, telephone number (513) 742–2020.

§ 63.3004 What definitions apply to this subpart?

Terms used in this subpart are defined the Clean Air Act, in § 63.2, and in this section as follows:

Administrator means the Administrator of the United States Environmental Protection Agency or his or her authorized representative (e.g., a State that has been delegated the authority to implement the provisions of this part).

Binder application vacuum exhaust means the exhaust from the vacuum system used to remove excess resin solution from the wet-formed fiberglass mat before it enters the drying and curing oven.

Deviation means any instance in which an affected source subject to this subpart, or an owner or operator of such a source:

(1) Fails to meet any requirement or obligation established by this subpart, including but not limited to any emission limit, or operating limit, or work practice standard;

(2) Fails to meet any term or condition that is adopted to implement an applicable requirement in this subpart and that is included in the operating permit for any affected source required to obtain such a permit; or

(3) Fails to meet any emission limit, or operating limit, or work practice standard in this subpart during start-up, shutdown, or malfunction, regardless of whether or not such failure is permitted by this subpart.

Drying and curing oven means the process section that evaporates excess moisture from a fiberglass mat and cures the resin that binds the fibers.

Emission limitation means an emission limit, operating limit, or work practice standard.

Fiberglass mat production rate means the weight of finished fiberglass mat produced per hour of production including any trim removed after the binder is applied and before final packaging.

Loss-on-ignition means the percentage decrease in weight of fiberglass mat measured before and after it has been ignited to burn off the applied binder. The loss-on-ignition is used to monitor the weight percent of binder in fiberglass mat.

Nonwoven wet-formed fiberglass mat manufacturing means the production of a fiberglass mat by bonding glass fibers to each other using a resin solution. Nonwoven wet-formed fiberglass mat manufacturing is also referred to as wet-formed fiberglass mat manufacturing.

Roofing square means the amount of finished product needed to cover an area 10 feet by 10 feet (100 square feet) of finished roof.

Thermal oxidizer means an air pollution control device that uses controlled flame combustion inside a combustion chamber to convert combustible materials to noncombustible gases.

Urea-formaldehyde content in binder formulation means the mass-based percent of urea-formaldehyde resin in the total binder mix as it is applied to the glass fibers to form the mat.

§§ 63.3005–63.3079 [Reserved]

TABLE 1 TO SUBPART HHHH.—MINIMUM REQUIREMENTS FOR MONITORING AND RECORDKEEPING

[As stated in § 63.2998(c), you must comply with the minimum requirements for monitoring and recordkeeping in the following table]

You must monitor these parameters:	At this frequency:	And record for the monitored perameter:
1. Thermal oxidizer temperature [a]	Continuously	15-minute and 3-hour block averages.
2. Other process or control device parameters specified in your OMM [b] plan.	As specified in your OMM plan	As specified in your OMM plan.
3. Urea-formaldehyde resin solids application rate.	On each operating day, calculate the average lb/hr application rate for each product manufactured during that day.	The average lb/hr value for each product manufactured during the day.
4. Resin free-formaldehyde content	For each lot of resin purchased	The value for each lot used during the operating day.
5. Loss-on-ignition [c]	Measured at least once per day, for each product manufactured during that day.	The value for each product manufactured during the operating day.
6. UF-to-latex ratio in the binder [c]	For each batch of binder prepared the operating day.	The value for each batch of binder prepared during the operating day.
7. Weight of the final mat product per square (lb/roofing square)[c].	Each product manufactured during the operating day.	The value for each product manufactured during the operating day.

[As stated in § 63.2998(c), you must comply with the minimum requirements for monitoring and recordkeeping in the following table]

You must monitor these parameters:	At this frequency:	And record for the monitored perameter:
8. Average nonwoven wet-formed fiberglass mat production rate (roofing squares per the hour) [c].	For each product manufactured during the operating day.	The average value for each product manufactured during operating day.

[a] Required if a thermal oxidizer is used to control formaldehyde emissions.
[b] Required if process modifications or a control device other than a thermal oxidizer is used to control emissions.
[c] These parameters must be monitored and values recorded, but no operating limits apply.

TABLE 2 TO SUBPART HHHH.—APPLICABILITY OF GENERAL PROVISIONS (40 CFR PART 63, SUBPART A) TO SUBPART HHHH

[As stated in § 63.3001, you must comply with the applicable General Provisions requirements according to the following table]

Citation	Requirement	Applies to subpart HHHH	Explanation
§ 63.1(a)(1)–(4)	General Applicability	Yes	
§ 63.1(a)(5)		No	[Reserved].
§ 63.1(a)(6)–(8)		Yes	
§ 63.1(a)(9)		No	[Reserved].
§ 63.1(a)(10)–(14)		Yes	
§ 63.1(b)	Initial Applicability Determination	Yes	
§ 63.1(c)(1)	Applicability After Standard Established	Yes	
§ 63.1(c)(2)		Yes	Some plants may be area sources.
§ 63.1(c)(3)		No	[Reserved].
§ 63.1(c)(4)–(5)		Yes	
§ 63.1(d)		No	[Reserved].
§ 63.1(e)	Applicability of Permit Program	Yes	
§ 63.2	Definitions	Yes	Additional definitions in § 63.3004.
§ 63.3	Units and Abbreviations	Yes	
§ 63.4(a)(1)–(3)	Prohibited Activities	Yes	
§ 63.4(a)(4)		No	[Reserved].
§ 63.4(a)(5)		Yes	
§ 63.4(b)–(c)	Circumvention/Severability	Yes	
§ 63.5(a)	Construction/Reconstruction	Yes	
§ 63.5(b)(1)	Existing/Constructed/Reconstruction	Yes	
§ 63.5(b)(2)		No	[Reserved].
§ 63.5(b)(3)–(6)		Yes	
§ 63.5(c)		No	[Reserved].
§ 63.5(d)	Application for Approval of Construction/Reconstruction.	Yes	
§ 63.5(e)	Approval of Construction/Reconstruction	Yes	
§ 63.5(f)	Approval of Construction/Reconstruction Based on State Review.	Yes	
§ 63.6(a)	Compliance with Standards and Maintenance—Applicability.	Yes	
§ 63.6(b)(1)–(5)	New and Reconstructed Sources-Dates	Yes	
§ 63.6(b)(6)		No	[Reserved].
§ 63.6(b)(7)		Yes	
§ 63.6(c)(1)–(2)	Existing Sources Dates	Yes	§ 63.2985 specifies dates.
§ 63.6(c)(3)–(4)		No	[Reserved].
§ 63.6(c)(5)		Yes	
§ 63.6(d)		No	[Reserved].
§ 63.6(e)	Operation and Maintenance Requirements.	Yes	§§ 63.2984 and 63.2987 specify additional requirements.
§ 63.6(f)	Compliance with Emission Standards	Yes	
§ 63.6(g)	Alternative Standard	Yes	EPA retains approval authority.
§ 63.6(h)	Compliance with Opacity/Visible Emissions Standards.	No	Subpart HHHH does not specify opacity or visible emission standards.
§ 63.6(i)(1)–(14)	Extension of Compliance	Yes	

§ 63.6(i)(15)		No	[Reserved].
§ 63.6(i)(16)		Yes	
§ 63.6(j)	Exemption from Compliance	Yes	
§ 63.7(a)	Performance Test Requirements—Applicability and Dates.	Yes	
§ 63.7(b)	Notification of Performance Test	Yes	
§ 63.7(c)	Quality Assurance Program/Test Plan	Yes	
§ 63.7(d)	Testing Facilities	Yes	
§ 63.7(e)	Conduct of Tests	Yes	§ 63.2991–63.2994 specify additional requirements.
§ 63.7(f)	Alternative Test Method	Yes	EPA retains approval authority
§ 63.7(g)	Data Analysis	Yes	
§ 63.7(h)	Waiver of Tests	Yes	
§ 63.8(a)(1)–(2)	Monitoring Requirements—Applicability	Yes	
§ 63.8(a)(3)		No	[Reserved].
§ 63.8(a)(4)		Yes	
§ 63.8(b)	Conduct of Monitoring	Yes	
§ 63.8(c)(1)–(3)	Continuous Monitoring System (CMS) Operation and Maintenance.	Yes	
§ 63.8(c)(4)		Yes	
§ 63.8(c)(5)		No	Subpart HHHH does not specify opacity or visible emission standards
§ 63.8(c)(6)–(8)		Yes	
§ 63.8(d)	Quality Control	Yes	
§ 63.8(e)	CMS Performance Evaluation	Yes	
§ 63.8(f)(1)–(5)	Alternative Monitoring Method	Yes	EPA retains approval authority
§ 63.8(f)(6)	Alternative to Relative Accuracy Test	No	Subpart HHHH does not require the use of continuous emissions monitoring systems (CEMS)
§ 63.8(g)(1)	Data Reduction	Yes	
§ 63.8(g)(2)	Data Reduction	No	Subpart HHHH does not require the use of CEMS or continuous opacity monitoring systems (COMS).
§ 63.8(g)(3)–(5)	Data Reduction	Yes	
§ 63.9(a)	Notification Requirements—Applicability	Yes	
§ 63.9(b)	Initial Notifications	Yes	
§ 63.9(c)	Request for Compliance Extension	Yes	
§ 63.9(d)	New Source Notification for Special Compliance Requirements.	Yes	
§ 63.9(e)	Notification of Performance Test.	Yes	
§ 63.9(f)	Notification of Visible Emissions/Opacity Test	No	Subpart HHHH does not specify opacity or visible emission standards.
§ 63.9(g)(1)	Additional CMS Notifications	Yes	
§ 63.9(g)(2)–(3)		No	Subpart HHHH does not require the use of COMS or CEMS.
§ 63.9(h)(1)–(3)	Notification of Compliance Status	Yes	§ 63.3000(b) specifies additional requirements.
§ 63.9(h)(4)		No	[Reserved].
§ 63.9(h)(5)–(6)		Yes	
§ 63.9(i)	Adjustment of Deadlines	Yes	
§ 63.9(j)	Change in Previous Information	Yes	
§ 63.10(a)	Recordkeeping/Reporting—Applicability	Yes	
§ 63.10(b)	General Recordkeeping Requirements	Yes	§ 63.2998 includes additional requirements.
§ 63.10(c)(1)	Additional CMS Recordkeeping	Yes	

[As stated in § 63.3001, you must comply with the applicable General Provisions requirements according to the following table]

Citation	Requirement	Applies to subpart HHHH	Explanation
§ 63.10(c)(2)–(4)		No	[Reserved].
§ 63.10(c)(5)–(8)		Yes	
§ 63.10(c)(9)		No	[Reserved].
§ 63.10(c)(10)–(15)		Yes	
§ 63.10(d)(1)	General Reporting Requirements	Yes	§ 63.3000 includes additional requirements.
§ 63.10(d)(2)	Performance Test Results	Yes	§ 63.3000 includes additional requirements
§ 63.10(d)(3)	Opacity or Visible Emissions Observations.	No	Subpart HHHH does not specify opacity or visible emission standards.
§ 63.10(d)(4)–(5)	Progress Reports/Startup, Shutdown, and Malfunction Reports.	Yes	
§ 63.10(e)(1)	Additional CMS Reports—General	No	Subpart HHHH does not require CEMS.
§ 63.10(e)(2)	Reporting results of CMS performance evaluations.	Yes	
§ 63.10(e)(3)	Excess Emission/CMS Performance Reports.	Yes	
§ 63.10(e)(4)	COMS Data Reports	No	Subpart HHHH does not specify opacity or visible emission standards.
§ 63.10(f)	Recordkeeping/Reporting Waiver	Yes	EPA retains approval authority
§ 63.11	Control Device Requirments—Applicability.	No	Facilities subject to subpart HHHH do not use flares as control devices.
§ 63.12	State Authority and Delegations	Yes	
§ 63.13	Addresses	Yes	
§ 63.14	Incorporation by Reference	No	
§ 63.15	Availability of Information/Confidentiality	Yes	

APPENDIX A TO SUBPART HHHH—METHOD FOR DETERMINING FREE-FORMALDEHYDE IN UREA-FORMALDEHYDE RESINS BY SODIUM SULFITE (ICED & COOLED)

1.0 Scope

This procedure corresponds to the Housing and Urban Development method of determining free-formaldehyde in urea-formaldehyde resins. This method applies to samples that decompose to yield formaldehyde under the conditions of other free-formaldehyde methods. The primary use is for urea-formaldehyde resins.

2.0 Part A—Testing Resins

Formaldehyde will react with sodium sulfite to form the sulfite addition products and liberate sodium hydroxide (NaOH); however, at room temperature, the methanol groups present will also react to liberate NaOH. Titrate at 0 degrees Celsius (°C) to minimize the reaction of the methanol groups.

2.1 Apparatus Required.

2.1.1 Ice crusher.

2.1.2 One 100-milliliter (mL) graduated cylinder.

2.1.3 Three 400-mL beakers.

2.1.4 One 50-mL burette.

2.1.5 Analytical balance accurate to 0.1 milligrams (mg).

2.1.6 Magnetic stirrer.

2.1.7 Magnetic stirring bars.

2.1.8 Disposable pipettes.

2.1.9 Several 5-ounce (oz.) plastic cups.

2.1.10 Ice cube trays (small cubes).

2.2 Materials Required.

2.2.1 Ice cubes (made with distilled water).

2.2.2 A solution of 1 molar (M) sodium sulfite (Na_2SO_3) (63 grams (g) Na_2SO_3/500 mL water (H_2O) neutralized to thymolphthalein endpoint).

2.2.3 Standardized 0.1 normal (N) hydrochloric acid (HCl).

2.2.4 Thymolphthalein indicator (1.0 g thymolphthalein/199 g methanol).

2.2.5 Sodium chloride (NaCl) (reagent grade).

2.2.6 Sodium hydroxide (NaOH).

2.3 Procedure.

2.3.1 Prepare sufficient quantity of crushed ice for three determinations (two trays of cubes).

2.3.2 Put 70 cubic centimeters (cc) of 1 M Na_2SO_3 solution into a 400-mL beaker. Begin stirring and add approximately 100 g of crushed ice and 2 g of NaCl. Maintain 0 °C during test, adding ice as necessary.

2.3.3 Add 10–15 drops of thymolphthalein indicator to the chilled solution. If the solution remains clear, add 0.1 N NaOH until the solution turns blue; then add 0.1 N HCl back to the colorless endpoint. If the solution turns blue upon adding the indicator, add 0.1 N HCl to the colorless endpoint.

2.3.4 On the analytical balance, accurately weigh the amount of resin indicated under the ''*Resin Sample Size*'' chart (see below) as follows.

RESIN SAMPLE SIZE

Approximate free HCHO (percent)	Sample weight (gram(s))
<0.5	10
0.5–1.0	5
1.0–3.0	2
3.0	1

2.3.4.1 Pour about 1 inch of resin into a 5 oz. plastic cup.

2.3.4.2 Determine the gross weight of the cup, resin, and disposable pipette (with the narrow tip broken off) fitted with a small rubber bulb.

2.3.4.3 Pipette out the desired amount of resin into the stirring, chilled solution (approximately 1.5 to 2 g per pipette-full).

2.3.4.4 Quickly reweigh the cup, resin, and pipette with the bulb.

2.3.4.5 The resultant weight loss equals the grams of resin being tested.

2.3.5 Rapidly titrate the solution with 0.1 N HCl to the colorless endpoint described in Step 3 (2.3.3).

2.3.6 Repeat the test in triplicate.

2.4 Calculation.

2.4.1 The percent free-formaldehyde (%HCHO) is calculated as follows:

$$\%\text{HCHO} = \frac{(\text{mL 0.1 N HCl})\ (\text{N of Acid})\ (3.003)}{\text{Weight of Sample}}$$

2.4.2 Compute the average percent free-formaldehyde of the three tests.

(NOTE: If the results of the three tests are not within a range of ±0.5 percent or if the average of the three tests does not meet expected limits, carry out Part B and then repeat Part A.)

3.0 Part B—Standard Check

Part B ensures that test reagents used in determining percent free-formaldehyde in urea-formaldehyde resins are of proper concentration and that operator technique is correct. Should any doubts arise in either of

these areas, the formaldehyde standard solution test should be carried out.

3.1 Preparation and Standardization of a 1 Percent Formalin Solution.

Prepare a solution containing approximately 1 percent formaldehyde from a stock 37 percent formalin solution. Standardize the prepared solution by titrating the hydroxyl ions resulting from the formation of the formaldehyde bisulfite complex.

3.2 Apparatus Required.

NOTE: All reagents must be American Chemical Society analytical reagent grade or better.

3.2.1 One 1-liter (L) volumetric flask (class A).

3.2.2 One 250-mL volumetric flask (class A).

3.2.3 One 250-mL beaker.

3.2.4 One 100-mL pipette (class A).

3.2.5 One 10-mL pipette (class A).

3.2.6 One 50-mL graduated cylinder (class A).

3.2.7 A pH meter, standardized using pH 7 and pH 10 buffers.

3.2.8 Magnetic stirrer.

3.2.9 Magnetic stirring bars.

3.2.10 Several 5-oz. plastic cups.

3.2.11 Disposal pipettes.

3.2.12 Ice cube trays (small cubes).

3.3 Materials Required.

3.3.1 A solution of 37 percent formalin.

3.3.2 Anhydrous Na_2SO_3.

3.3.3 Distilled water.

3.3.4 Standardized 0.100 N HCl.

3.3.5 Thymolphthalein indicator (1.0 g thymolphthalein/199 g methanol).

3.4 Preparation of Solutions and Reagents.

3.4.1 Formaldehyde Standard Solution (approximately 1 percent). Measure, using a graduated cylinder, 27.0 mL of analytical reagent 37 percent formalin solution into a 1-L volumetric flask. Fill the flask to volume with distilled water.

(NOTE: You must standardize this solution as described in section 3.5. This solution is stable for 3 months.)

3.4.2 Sodium Sulfite Solution 1.0 M (used for standardization of Formaldehyde Standard Solution). Quantitatively transfer, using distilled water as the transfer solvent, 31.50 g of anhydrous Na_2SO_3 into a 250-mL volumetric flask. Dissolve in approximately 100 mL of distilled water and fill to volume.

(NOTE: You must prepare this solution daily, but the calibration of the Formaldehyde Standard Solution needs to be done only once.)

3.4.3 Hydrochloric Acid Standard Solution 0.100 M. This reagent should be readily available as a primary standard that only needs to be diluted.

3.5 Standardization.

3.5.1 Standardization of Formaldehyde Standard Solution.

3.5.1.1 Pipette 100.0 mL of 1 M sodium sulfite into a stirred 250-mL beaker.

3.5.1.2 Using a standardized pH meter, measure and record the pH. The pH should be around 10. It is not essential the pH be 10; however, it is essential that the value be accurately recorded.

3.5.1.3 To the stirring Na_2SO_3 solution, pipette in 10.0 mL of Formaldehyde Standard Solution. The pH should rise sharply to about 12.

3.5.1.4 Using the pH meter as a continuous monitor, titrate the solution back to the original exact pH using 0.100 N HCl. Record the milliliters of HCl used as titrant. (NOTE: Approximately 30 to 35 mL of HCl will be required.)

3.5.1.5 Calculate the concentration of the Formaldehyde Standard Solution using the equation as follows:

$$\%\text{HCHO} = \frac{(\text{mL HCl})\ (\text{N HCl})\ (3.003)}{\text{mL sample}}$$

3.6 Procedure.

3.6.1 Prepare a sufficient quantity of crushed ice for three determinations (two trays of cubes).

3.6.2 Put 70 cc of 1 M Na_2SO_3 solution into a 400-mL beaker. Begin stirring and add approximately 100 g of crushed ice and 2 g NaCl. Maintain 0 °C during the test, adding ice as necessary.

3.6.3 Add 10–15 drops of thymolphthalein indicator to the chilled solution. If the solution remains clear, add 0.1 N NaOH until the solution turns blue; then add 0.1 N HCl back to the colorless endpoint. If the solution turns blue upon adding the indicator, add 0.1 N HCl to the colorless endpoint.

3.6.4 On the analytical balance, accurately weigh a sample of Formaldehyde Standard Solution as follows.

3.6.4.1 Pour about 0.5 inches of Formaldehyde Standard Solution into a 5-oz. plastic cup.

3.6.4.2 Determine the gross weight of the cup, Formaldehyde Standard Solution, and a disposable pipette fitted with a small rubber bulb.

3.6.4.3 Pipette approximately 5 g of the Formaldehyde Standard Solution into the stirring, chilled Na_2SO_3 solution.

3.6.4.4 Quickly reweigh the cup, Formaldehyde Standard Solution, and pipette with the bulb.

3.6.4.5 The resultant weight loss equals the grams of Formaldehyde Standard Solution being tested.

3.6.5 Rapidly titrate the solution with 0.1 N HCl to the colorless endpoint in Step 3 (3.6.3).

3.6.6 Repeat the test in triplicate.

3.7 Calculation for Formaldehyde Standard Solution.

3.7.1 The percent free-formaldehyde (% HCHO) is calculated as follows:

$$\%HCHO = \frac{(\text{mL 0.1 N HCl})(\text{N Acid})(3.003)}{\text{Weight of Formaldehyde Standard Solution}}$$

3.7.2 The range of the results of three tests should be no more than ±5 percent of the actual Formaldehyde Standard Solution concentration. Report results to two decimal places.

3.8 Reference.

West Coast Adhesive Manufacturers Trade Association Test 10.1.

APPENDIX B TO SUBPART HHHH—METHOD FOR THE DETERMINATION OF LOSS-ON-IGNITION

1.0 Purpose

The purpose of this test is to determine the loss-on-ignition (LOI) of wet-formed fiberglass mat.

2.0 Equipment

2.1 Scale sensitive to 0.001 gram (g).

2.2 Drying oven equipped with a means of constant temperature regulation and mechanical air convection.

2.3 Furnace designed to heat to at least 625 °C (1,157 °F) and controllable to ±25 °C (±45 °F).

2.4 Crucible, high form, 250 milliliter (mL).

2.5 Desiccator.

2.6 Pan balance (see Note 2 in 4.9)

3.0 Sample Collection Procedure

3.1 Obtain a sample of mat in accordance with Technical Association of the Pulp and Paper Industry (TAPPI) method 1007 ''Sample Location.''

3.2 Use a 5- to 10-g sample cut into pieces small enough to fit into the crucible.

3.3 Place the sample in the crucible. (NOTE 1: To test without the use of a crucible, see Note 2 after Section 4.8.)

3.4 Condition the sample in the furnace set at 105 ± 3 °C (221 ± 9 °F) for 5 minutes ± 30 seconds.

4.0 Procedure

4.1 Condition each sample by drying for 5 minutes ± 30 seconds at 105 ± 3 °C (22 ± 5 °F).

4.2 Remove the test sample from the furnace and cool in the desiccator for 30 minutes in the standard atmosphere for testing glass textiles.

4.3 Place the empty crucible in the furnace at 625 ± 25 °C (1,157 ± 45 °F). After 30 minutes, remove and cool the crucible in the standard atmosphere (TAPPI method 1008) for 30 minutes.

4.4 Identify each crucible with respect to each test sample of mat.

4.5 Weigh the empty crucible to the nearest 0.001 g. Record this weight as the tare mass, T.

4.6 Place the test sample in the crucible and weigh to the nearest 0.001 g. Record this weight as the initial mass, A.

4.7 Place the test sample and crucible in the furnace and ignite at 625 ± 25 °C (1,157 ± 45 °F).

4.8 After ignition for at least 30 minutes, remove the test sample and crucible from the furnace and cool in the desiccator for 30 minutes in the standard atmosphere (TAPPI method 1008).

4.9 Remove each crucible, and test each sample separately from the desiccator, and immediately weigh each sample to the nearest 0.001 g. Record this weight as the ignited mass, B. (NOTE 2: When it is known that no ash residue separates from the test sample during the weighing and igniting processes, you may weigh the sample separately without the crucible. When this occurs, the tare mass (T) equals zero. With appropriate care, you can dry and weigh a single piece of mat and place with tongs into the ignition oven on appropriate refractory supports. When the ignition time is over, remove the sample as an intact fragile web and weigh it directly on a pan balance.)

5.0 Calculation

5.1 Calculate the LOI for each sample as follows:

$$\%\ \text{LOI} = 100 \times (\text{A} - \text{B})/(\text{A} - \text{T})$$

Where:

A = initial mass of crucible and sample before ignition (g);

B = mass of crucible and glass residue after ignition (g); and

T = tare mass of crucible, (g) (see Note 2).

5.2 Report the percent LOI of the glass mat to the nearest 0.1 percent.

6.0 Precision

The repeatability of this test method for measurements on adjacent specimens from the same sample of mat is better than 1 percent.

Subpart SSSS—National Emission Standards for Hazardous Air Pollutants: Surface Coating of Metal Coil

SOURCE: 67 FR 39812, June 10, 2002, unless otherwise noted.

WHAT THIS SUBPART COVERS

§ 63.5080 What is in this subpart?

This subpart describes the actions you must take to reduce emissions of hazardous air pollutants (HAP) if you own or operate a facility that performs metal coil surface coating operations and is a major source of HAP. This subpart establishes emission standards and states what you must do to comply. Certain requirements apply to all who must comply with the subpart; others depend on the means you use to comply with an emission standard.

§ 63.5090 Does this subpart apply to me?

(a) The provisions of this subpart apply to each facility that is a major source of HAP, as defined in § 63.2, at which a coil coating line is operated, except as provided in paragraph (b) of this section.

(b) This subpart does not apply to any coil coating line that meets the criteria of paragraph (b)(1) or (2) of this section.

(1) A coil coating line that is part of research or laboratory equipment.

(2) A coil coating line on which at least 85 percent of the metal coil coated, based on surface area, is less than 0.15 millimeter (0.006 inch) thick, except as provided in paragraph (c) of this section.

(c) If you operate a coating line subject to subpart JJJJ of this part that also meets the criteria in either paragraph (c)(1) or (2) of this section, and you choose to comply with the requirements of this subpart, then such compliance constitutes compliance with subpart JJJJ. The coating line for which you choose this option is, therefore, included in the affected source for this subpart as defined in § 63.5110 and shall not be included in the affected source for subpart JJJJ as defined in § 63.3300.

(1) The coating line is used to coat metal coil of thicknesses both less than and greater than or equal to 0.15 millimeter (0.006 inch) thick, regardless of the percentage of surface area of each thickness coated.

(2) The coating line is used to coat only metal coil that is less than 0.15 millimeter (0.006 inch) thick and the coating line is controlled by a common control device that also receives organic HAP emissions from a coil coating line that is subject to the requirements of this subpart.

(d) Each coil coating line that does not comply with the provisions of this subpart because it meets the criteria in paragraph (b)(2) of this section, that for any rolling 12-month period fails to meet the criteria in paragraph (b)(2) would from that point forward become subject to the provisions of this subpart. After becoming subject to the provisions of this subpart, the coil coating line would no longer be eligible to use the criteria of paragraph (b)(2) of this section, even if in subsequent 12-month periods at least 85 percent of the metal coil coated, based on surface area, is less than 0.15 millimeter (0.006 inch) thick.

§ 63.5100 Which of my emissions sources are affected by this subpart?

The affected source subject to this subpart is the collection of all of the coil coating lines at your facility.

§ 63.5110 What special definitions are used in this subpart?

All terms used in this subpart that are not defined in this section have the meaning given to them in the Clean Air Act (CAA) and in subpart A of this part.

Always-controlled work station means a work station associated with a curing oven from which the curing oven exhaust is delivered to a control device with no provision for the oven exhaust to bypass the control device. Sampling lines for analyzers and relief valves needed for safety purposes are not considered bypass lines.

Capture efficiency means the fraction of all organic HAP emissions generated by a process that is delivered to a control device, expressed as a percentage.

Capture system means a hood, enclosed room, or other means of collecting organic HAP emissions and conveying them to a control device.

Car-seal means a seal that is placed on a device that is used to change the position of a valve or damper (e.g., from open to closed) in such a way that the position of the valve or damper cannot be changed without breaking the seal.

Coating means material applied onto or impregnated into a substrate for decorative, protective, or functional purposes. Such materials include, but are not limited to, paints, varnishes, sealants, inks, adhesives, maskants, and temporary coatings. Decorative, protective, or functional materials that consist only of solvents, protective oils, acids, bases, or any combination of these substances are not considered coatings for the purposes of this subpart.

Coating material means the coating and other products (e.g., a catalyst and resin in multi-component coatings) combined to make a single material at the coating facility that is applied to metal coil. For the purposes of this subpart, an organic solvent that is used to thin a coating prior to application to the metal coil is considered a coating material.

Coil coating line means a process and the collection of equipment used to apply an organic coating to the surface of metal coil. A coil coating line includes a web unwind or feed section, a series of one or more work stations, any associated curing oven, wet section, and quench station. A coil coating line does not include ancillary operations such as mixing/thinning, cleaning, wastewater treatment, and storage of coating material.

Control device means a device such as a solvent recovery device or oxidizer which reduces the organic HAP in an exhaust gas by recovery or by destruction.

Control device efficiency means the ratio of organic HAP emissions recovered or destroyed by a control device to the total organic HAP emissions that are introduced into the control device, expressed as a percentage.

Curing oven means the device that uses heat or radiation to dry or cure the coating material applied to the metal coil.

Day means a 24-consecutive-hour period.

Deviation means any instance in which an affected source, subject to this subpart, or an owner or operator of such a source:

(1) Fails to meet any requirement or obligation established by this subpart including, but not limited to, any emission limitation (including any operating limit) or work practice standard;

(2) Fails to meet any term or condition that is adopted to implement an applicable requirement in this subpart and that is included in the operating permit for any affected source required to obtain such a permit; or

(3) Fails to meet any emission limitation (including any operating limit) or work practice standard in this subpart during start-up, shutdown, or malfunction, regardless of whether or not such failure is permitted by this subpart.

Existing affected source means an affected source the construction of which commenced on or before July 18, 2000, and it has not subsequently undergone reconstruction as defined in §63.2.

Facility means all contiguous or adjoining property that is under common ownership or control, including properties that are separated only by a road or other public right-of-way.

Flexible packaging means any package or part of a package the shape of which can be readily changed. Flexible packaging includes but is not limited to bags, pouches, labels, liners and wraps utilizing paper, plastic, film, aluminum foil, metalized or coated paper or film, or any combination of these materials.

HAP applied means the organic HAP content of all coating materials applied to a substrate by a coil coating line.

Intermittently-controllable work station means a work station associated with a curing oven with provisions for the curing oven exhaust to be delivered to a control device or diverted from a control device through a bypass line, depending on the position of a valve or damper. Sampling lines for analyzers and relief valves needed for safety purposes are not considered bypass lines.

Metal coil means a continuous metal strip that is at least 0.15 millimeter (0.006 inch) thick, which is packaged in a roll or coil prior to coating. After coating, it may or may not be rewound into a roll or coil. Metal coil does not include metal webs that are coated for use in flexible packaging.

Month means a calendar month or a pre-specified period of 28 days to 35 days to allow for flexibility in recordkeeping when data are based on a business accounting period.

Never-controlled work station means a work station which is not equipped with provisions by which any emissions, including those in the exhaust from any associated curing oven, may be delivered to a control device.

New affected source means an affected source the construction or reconstruction of which commenced after July 18, 2000.

Overall organic HAP control efficiency means the total efficiency of a control system, determined either by:

(1) The product of the capture efficiency as determined in accordance with the requirements of § 63.5160(e) and the control device efficiency as determined in accordance with the requirements of § 63.5160(a)(1)(i) and (ii) or § 63.5160(d); or

(2) A liquid-liquid material balance in accordance with the requirements of § 63.5170(e)(1).

Permanent total enclosure (PTE) means a permanently installed enclosure that meets the criteria of Method 204 of appendix M, 40 CFR part 51 for a PTE, and that directs all the exhaust gases from the enclosure to a control device.

Protective oil means an organic material that is applied to metal for the purpose of providing lubrication or protection from corrosion without forming a solid film. This definition of protective oil includes but is not limited to lubricating oils, evaporative oils (including those that evaporate completely), and extrusion oils.

Research or laboratory equipment means any equipment for which the primary purpose is to conduct research and development into new processes and products, where such equipment is operated under the close supervision of technically trained personnel and is not engaged in the manufacture of products for commercial sale in commerce, except in a de minimis manner.

Temporary total enclosure (TTE) means an enclosure constructed for the purpose of measuring the capture efficiency of pollutants emitted from a given source, as defined in Method 204 of 40 CFR part 51, appendix M.

Work station means a unit on a coil coating line where coating material is deposited onto the metal coil substrate.

EMISSION STANDARDS AND COMPLIANCE DATES

§ 63.5120 What emission standards must I meet?

(a) Each coil coating affected source must limit organic HAP emissions to the level specified in paragraph (a)(1), (2), or (3) of this section:

(1) No more than 2 percent of the organic HAP applied for each month during each 12-month compliance period (98 percent reduction); or

(2) No more than 0.046 kilogram (kg) of organic HAP per liter of solids applied during each 12-month compliance period; or

(3) If you use an oxidizer to control organic HAP emissions, operate the oxidizer such that an outlet organic HAP concentration of no greater than 20 parts per million by volume (ppmv) on a dry basis is achieved and the efficiency of the capture system is 100 percent.

(b) You must demonstrate compliance with one of these standards by following the applicable procedures in § 63.5170.

§ 63.5121 What operating limits must I meet?

(a) Except as provided in paragraph (b) of this section, for any coil coating line for which you use an add-on control device, unless you use a solvent recovery system and conduct a liquid-liquid material balance according to § 63.5170(e)(1), you must meet the applicable operating limits specified in Table 1 to this subpart. You must establish the operating limits during the performance test according to the requirements in § 63.5160(d)(3). You must meet the operating limits at all times after you establish them.

(b) If you use an add-on control device other than those listed in Table 1 to this subpart, or wish to monitor an alternative parameter and comply with a different operating limit, you must apply to the Administrator for approval of alternative monitoring under § 63.8(f).

§ 63.5130 When must I comply?

(a) For an existing affected source, the compliance date is 3 years after June 10, 2002.

(b) If you own or operate a new affected source subject to the provisions of this subpart, you must comply immediately upon start-up of the affected source, or by June 10, 2002, whichever is later.

(c) Affected sources which have undergone reconstruction are subject to the requirements for new affected sources.

(d) The initial compliance period begins on the applicable compliance date specified in paragraph (a) or (b) of this section and ends on the last day of the 12th month following the compliance date. If the compliance date falls on any day other than the first day of a month, then the initial compliance period extends through that month plus the next 12 months.

(e) For the purpose of demonstrating continuous compliance, a compliance period consists of 12 months. Each month after the end of the initial compliance period described in paragraph (d) of this section is the end of a compliance period consisting of that month and the preceding 11 months.

General Requirements for Compliance with the Emission Standards and for Monitoring and Performance Tests

§ 63.5140 What general requirements must I meet to comply with the standards?

(a) You must be in compliance with the standards in this subpart at all times, except during periods of start-up, shutdown, and malfunction of any capture system and control device used to comply with this subpart. If you are complying with the emission standards of this subpart without the use of a capture system and control device, you must be in compliance with the standards at all times, including periods of start-up, shutdown, and malfunction.

(b) Table 2 of this subpart provides cross references to subpart A of this part, indicating the applicability of the General Provisions requirements to this subpart.

§ 63.5150 If I use a control device to comply with the emission standards, what monitoring must I do?

Table 1 to § 63.5150.—Control Device Monitoring Requirements Index

If you operate a coil coating line and have the following:	Then you must:
1. Control device	Monitor control device operating parameters (§ 63.5150(a)(3)).
2. Capture system	Monitor capture system operating parameters (§ 63.5150(a)(4)).
3. Intermittently controllable work station	Monitor parameters related to possible exhaust flow through any bypass to a control device (§ 63.5150(a)(1)).
4. Continuous emission monitors	Operate continuous emission monitors and perform a quarterly audit (§ 63.5150(a)(2)).

(a) To demonstrate continuing compliance with the standards, you must monitor and inspect each capture system and each control device required to comply with § 63.5120 following the date on which the initial performance test of the capture system and control device is completed. You must install and operate the monitoring equipment as specified in paragraphs (a)(1) through (4) of this section.

(1) *Bypass monitoring*. If you operate coil coating lines with intermittently-controllable work stations, you must follow at least one of the procedures in paragraphs (a)(1)(i) through (iv) of this section for each curing oven associated with these work stations to monitor for potential bypass of the control device:

(i) *Flow control position indicator*. Install, calibrate, maintain, and operate

according to the manufacturer's specifications a flow control position indicator that provides a record indicating whether the exhaust stream from the curing oven is directed to the control device or is diverted from the control device. The time and flow control position must be recorded at least once per hour, as well as every time the flow direction is changed. The flow control position indicator must be installed at the entrance to any bypass line that could divert the exhaust stream away from the control device to the atmosphere.

(ii) *Car-seal or lock-and-key valve closures.* Secure any bypass line valve in the closed position with a car-seal or a lock-and-key type configuration when the control device is in operation; a visual inspection of the seal or closure mechanism will be performed at least once every month to ensure that the valve or damper is maintained in the closed position, and the exhaust stream is not diverted through the bypass line.

(iii) *Valve closure continuous monitoring.* Ensure that any bypass line valve or damper is in the closed position through continuous monitoring of valve position when the control device is in operation. The monitoring system must be inspected at least once every month to verify that the monitor will indicate valve position.

(iv) *Automatic shutdown system.* Use an automatic shutdown system in which the coil coating line is stopped when flow is diverted away from the control device to any bypass line when the control device is in operation. The automatic shutdown system must be inspected at least once every month to verify that it will detect diversions of flow and shut down operations.

(2) *Continuous emission monitoring system (CEMS).* If you are demonstrating continuous compliance with the standards in § 63.5120(a)(1) or (2) through continuous emission monitoring of a control device, you must install, calibrate, operate, and maintain continuous emission monitors to measure the total organic volatile matter concentration at both the control device inlet and outlet, and you must continuously monitor flow rate. If you are demonstrating continuous compliance with the outlet organic HAP concentration limit in § 63.5120(a)(3), you must install, calibrate, operate, and maintain a continuous emission monitor to measure the total organic volatile matter concentration at the control device outlet.

(i) All CEMS must comply with performance specification 8 or 9 of 40 CFR part 60, appendix B, as appropriate for the detection principle you choose. The requirements of 40 CFR part 60, procedure 1, appendix F must also be followed. In conducting the quarterly audits of the monitors as required by procedure 1, appendix F, you must use compounds representative of the gaseous emission stream being controlled.

(ii) As specified in § 63.8(c)(4)(ii), each CEMS and each flow rate monitor must complete a minimum of one cycle of operation (sampling, analyzing, and data recording) for each successive 15-minute period. Information which must be determined for recordkeeping purposes, as required by § 63.5190(a)(1)(i) includes:

(A) The hourly average of all recorded readings;

(B) The daily average of all recorded readings for each operating day; and

(C) The monthly average for each month during the semiannual reporting period.

(3) *Temperature monitoring of oxidizers.* If you are complying with the requirements of the standards in § 63.5120 through the use of an oxidizer and demonstrating continuous compliance through monitoring of an oxidizer operating parameter, you must comply with paragraphs (a)(3)(i) through (iii) of this section.

(i) Install, calibrate, maintain, and operate temperature monitoring equipment according to manufacturer's specifications. The calibration of the chart recorder, data logger, or temperature indicator must be verified every 3 months; or the chart recorder, data logger, or temperature indicator must be replaced. You must replace the equipment either if you choose not to perform the calibration, or if the equipment cannot be calibrated properly. Each temperature monitoring device must be equipped with a continuous recorder. The device must have an

accuracy of ±1 percent of the temperature being monitored in degrees Celsius, or ±1 °Celsius, whichever is greater.

(ii) For an oxidizer other than a catalytic oxidizer, to demonstrate continuous compliance with the operating limit established according to §63.5160(d)(3)(i), you must install the thermocouple or temperature sensor in the combustion chamber at a location in the combustion zone.

(iii) For a catalytic oxidizer, if you are demonstrating continuous compliance with the operating limit established according to §63.5160(d)(3)(ii)(A) and (B), then you must install the thermocouples or temperature sensors in the vent stream at the nearest feasible point to the inlet and outlet of the catalyst bed. Calculate the temperature difference across the catalyst. If you are demonstrating continuous compliance with the operating limit established according to §63.5160(d)(3)(ii)(C) and (D), then you must install the thermocouple or temperature sensor in the vent stream at the nearest feasible point to the inlet of the catalyst bed.

(4) *Capture system monitoring.* If you are complying with the requirements of the standards in §63.5120 through the use of a capture system and control device, you must develop a capture system monitoring plan containing the information specified in paragraphs (a)(4)(i) and (ii) of this section. You must monitor the capture system in accordance with paragraph (a)(4)(iii) of this section. You must make the monitoring plan available for inspection by the permitting authority upon request.

(i) The monitoring plan must identify the operating parameter to be monitored to ensure that the capture efficiency measured during the initial compliance test is maintained, explain why this parameter is appropriate for demonstrating ongoing compliance, and identify the specific monitoring procedures.

(ii) The plan also must specify operating limits at the capture system operating parameter value, or range of values, that demonstrates compliance with the standards in §63.5120. The operating limits must represent the conditions indicative of proper operation and maintenance of the capture system.

(iii) You must conduct monitoring in accordance with the plan.

(b) Any deviation from the required operating parameters which are monitored in accordance with paragraphs (a)(3) and (4) of this section, unless otherwise excused, will be considered a deviation from the operating limit.

§63.5160 What performance tests must I complete?

TABLE 1 TO §63.5160.—REQUIRED PERFORMANCE TESTING SUMMARY

If you control HAP on your coil coating line by:	You must:
1. Limiting HAP or Volatile matter content of coatings	Determine the HAP or volatile matter and solids content of coating materials according to the procedures in §63.5160(b) and (c).
2. Using a capture system and add-on control device	Conduct a performance test for each capture and control system to determine: (1) the destruction or removal efficiency of each control device according to §63.5160(d), and (2) the capture efficiency of each capture system according to §63.5160(e).

(a) If you use a control device to comply with the requirements of §63.5120, you are not required to conduct a performance test to demonstrate compliance if one or more of the criteria in paragraphs (a)(1) through (3) of this section are met:

(1) The control device is equipped with continuous emission monitors for determining total organic volatile matter concentration, and capture efficiency has been determined in accordance with the requirements of this subpart; and the continuous emission monitors are used to demonstrate continuous compliance in accordance with §63.5150(a)(2); or

(2) You have received a waiver of performance testing under §63.7(h); or

(3) The control device is a solvent recovery system and you choose to comply by means of a monthly liquid-liquid material balance.

(b) *Organic HAP content.* You must determine the organic HAP weight fraction of each coating material applied by following one of the procedures in paragraphs (b)(1) through (4) of this section:

(1) *Method 311.* You may test the material in accordance with Method 311 of appendix A of this part. The Method 311 determination may be performed by the manufacturer of the material and the results provided to you. The organic HAP content must be calculated according to the criteria and procedures in paragraphs (b)(1)(i) through (iii) of this section.

(i) Count only those organic HAP that are measured to be present at greater than or equal to 0.1 weight percent for Occupational Safety and Health Administration (OSHA)-defined carcinogens as specified in 29 CFR 1910.1200(d)(4) and greater than or equal to 1.0 weight percent for other organic HAP compounds.

(ii) Express the weight fraction of each organic HAP you count according to paragraph (b)(1)(i) of this section as a value truncated to four places after the decimal point (for example, 0.3791).

(iii) Calculate the total weight fraction of organic HAP in the tested material by summing the counted individual organic HAP weight fractions and truncating the result to three places after the decimal point (for example, 0.763).

(2) *Method 24.* For coatings, you may determine the total volatile matter content as weight fraction of nonaqueous volatile matter and use it as a substitute for organic HAP, using Method 24 of 40 CFR part 60, appendix A. The Method 24 determination may be performed by the manufacturer of the coating and the results provided to you.

(3) *Alternative method.* You may use an alternative test method for determining the organic HAP weight fraction once the Administrator has approved it. You must follow the procedure in § 63.7(f) to submit an alternative test method for approval.

(4) *Formulation data.* You may use formulation data provided that the information represents each organic HAP present at a level equal to or greater than 0.1 percent for OSHA-defined carcinogens as specified in 29 CFR 1910.1200(d)(4) and equal to or greater than 1.0 percent for other organic HAP compounds in any raw material used, weighted by the mass fraction of each raw material used in the material. Formulation data may be provided to you by the manufacturer of the coating material. In the event of any inconsistency between test data obtained with the test methods specified in paragraphs (b)(1) through (3) of this section and formulation data, the test data will govern.

(c) *Solids content.* You must determine the solids content of each coating material applied. You may determine the volume solids content using ASTM D2697–86 (Reapproved 1998) or ASTM D6093–97 (incorporated by reference, see § 63.14), or an EPA approved alternative method. The ASTM D2697–86 (Reapproved 1998) or ASTM D6093–97 determination may be performed by the manufacturer of the material and the results provided to you. Alternatively, you may rely on formulation data provided by material providers to determine the volume solids.

(d) *Control device destruction or removal efficiency.* If you are using an add-on control device, such as an oxidizer, to comply with the standard in § 63.5120, you must conduct a performance test to establish the destruction or removal efficiency of the control device or the outlet HAP concentration achieved by the oxidizer, according to the methods and procedures in paragraphs (d)(1) and (2) of this section. During the performance test, you must establish the operating limits required by § 63.5121 according to paragraph (d)(3) of this section.

(1) An initial performance test to establish the destruction or removal efficiency of the control device must be conducted such that control device inlet and outlet testing is conducted simultaneously. To establish the outlet organic HAP concentration achieved by the oxidizer, only oxidizer outlet testing must be conducted. The data must be reduced in accordance with the

test methods and procedures in paragraphs (d)(1)(i) through (ix).

(i) Method 1 or 1A of 40 CFR part 60, appendix A, is used for sample and velocity traverses to determine sampling locations.

(ii) Method 2, 2A, 2C, 2D, 2F, or 2G of 40 CFR part 60, appendix A, is used to determine gas volumetric flow rate.

(iii) Method 3, 3A, or 3B of 40 CFR part 60, appendix A, used for gas analysis to determine dry molecular weight. You may also use as an alternative to Method 3B, the manual method for measuring the oxygen, carbon dioxide, and carbon monoxide content of exhaust gas, ANSI/ASME PTC 19.10–1981, ''Flue and Exhaust Gas Analyses'' (incorporated by reference, see §63.14).

(iv) Method 4 of 40 CFR part 60, appendix A, is used to determine stack gas moisture.

(v) Methods for determining gas volumetric flow rate, dry molecular weight, and stack gas moisture must be performed, as applicable, during each test run, as specified in paragraph (d)(1)(vii) of this section.

(vi) Method 25 or 25A of 40 CFR part 60, appendix A, is used to determine total gaseous non-methane organic matter concentration. Use the same test method for both the inlet and outlet measurements, which must be conducted simultaneously. You must submit notification of the intended test method to the Administrator for approval along with notification of the performance test required under §63.7(b). You must use Method 25A if any of the conditions described in paragraphs (d)(1)(vi)(A) through (D) of this section apply to the control device.

(A) The control device is not an oxidizer.

(B) The control device is an oxidizer, but an exhaust gas volatile organic matter concentration of 50 ppmv or less is required to comply with the standards in §63.5120; or

(C) The control device is an oxidizer, but the volatile organic matter concentration at the inlet to the control system and the required level of control are such that they result in exhaust gas volatile organic matter concentrations of 50 ppmv or less; or

(D) The control device is an oxidizer, but because of the high efficiency of the control device, the anticipated volatile organic matter concentration at the control device exhaust is 50 ppmv or less, regardless of inlet concentration.

(vii) Each performance test must consist of three separate runs, except as provided by §63.7(e)(3); each run must be conducted for at least 1 hour under the conditions that exist when the affected source is operating under normal operating conditions. For the purpose of determining volatile organic matter concentrations and mass flow rates, the average of the results of all runs will apply. If you are demonstrating initial compliance with the outlet organic HAP concentration limit in §63.5120(a)(3), only the average outlet volatile organic matter concentration must be determined.

(viii) If you are determining the control device destruction or removal efficiency, for each run, determine the volatile organic matter mass flow rates using Equation 1 of this section:

$$M_f = Q_{sd} C_C (12)(0.0416)\left(10^{-6}\right) \quad \text{(Eq. 1)}$$

Where:

M_f=total organic volatile matter mass flow rate, kg/per hour (h).

C_c=concentration of organic compounds as carbon in the vent gas, as determined by Method 25 or Method 25A, ppmv, dry basis.

Q_{sd}=volumetric flow rate of gases entering or exiting the control device, as determined by Method 2, 2A, 2C, 2D, 2F, or 2G, dry standard cubic meters (dscm)/h.

0.0416=conversion factor for molar volume, kg-moles per cubic meter (mol/m^3) (@ 293 Kelvin (K) and 760 millimeters of mercury (mmHg)).

(ix) For each run, determine the control device destruction or removal efficiency, DRE, using Equation 2 of this section:

$$DRE = \frac{M_{fi} - M_{fo}}{M_{fi}} \times 100 \quad \text{(Eq. 2)}$$

Where:

DRE=organic emissions destruction or removal efficiency of the add-on control device, percent.

M_{fi}=organic volatile matter mass flow rate at the inlet to the control device, kg/h.

M_{fo}=organic volatile matter mass flow rate at the outlet of the control device, kg/h.

(x) The control device destruction or removal efficiency is determined as the average of the efficiencies determined in the three test runs and calculated in Equation 2 of this section.

(2) You must record such process information as may be necessary to determine the conditions in existence at the time of the performance test. Operations during periods of start-up, shutdown, and malfunction will not constitute representative conditions for the purpose of a performance test.

(3) Operating limits. If you are using a capture system and add-on control device other than a solvent recovery system for which you conduct a liquid-liquid material balance to comply with the requirements in § 63.5120, you must establish the applicable operating limits required by § 63.5121. These operating limits apply to each capture system and to each add-on emission control device that is not monitored by CEMS, and you must establish the operating limits during the performance test required by paragraph (d) of this section according to the requirements in paragraphs (d)(3)(i) through (iii) of this section.

(i) *Thermal oxidizer*. If your add-on control device is a thermal oxidizer, establish the operating limits according to paragraphs (d)(3)(i)(A) and (B) of this section.

(A) During the performance test, you must monitor and record the combustion temperature at least once every 15 minutes during each of the three test runs. You must monitor the temperature in the firebox of the thermal oxidizer or immediately downstream of the firebox before any substantial heat exchange occurs.

(B) Use the data collected during the performance test to calculate and record the average combustion temperature maintained during the performance test. This average combustion temperature is the minimum operating limit for your thermal oxidizer.

(ii) *Catalytic oxidizer*. If your add-on control device is a catalytic oxidizer, establish the operating limits according to either paragraphs (d)(3)(ii)(A) and (B) or paragraphs (d)(3)(ii)(C) and (D) of this section.

(A) During the performance test, you must monitor and record the temperature just before the catalyst bed and the temperature difference across the catalyst bed at least once every 15 minutes during each of the three test runs.

(B) Use the data collected during the performance test to calculate and record the average temperature just before the catalyst bed and the average temperature difference across the catalyst bed maintained during the performance test. These are the minimum operating limits for your catalytic oxidizer.

(C) As an alternative to monitoring the temperature difference across the catalyst bed, you may monitor the temperature at the inlet to the catalyst bed and implement a site-specific inspection and maintenance plan for your catalytic oxidizer as specified in paragraph (d)(3)(ii)(D) of this section. During the performance test, you must monitor and record the temperature just before the catalyst bed at least once every 15 minutes during each of the three test runs. Use the data collected during the performance test to calculate and record the average temperature just before the catalyst bed during the performance test. This is the minimum operating limit for your catalytic oxidizer.

(D) You must develop and implement an inspection and maintenance plan for your catalytic oxidizer(s) for which you elect to monitor according to paragraph (d)(3)(ii)(C) of this section. The plan must address, at a minimum, the elements specified in paragraphs (d)(3)(ii)(D)(*1* (*3*) of this section.

(*1*) Annual sampling and analysis of the catalyst activity (*i.e.*, conversion efficiency) following the manufacturer's or catalyst supplier's recommended procedures.

(*2*) Monthly inspection of the oxidizer system including the burner assembly and fuel supply lines for problems and,

(*3*) Annual internal and monthly external visual inspection of the catalyst bed to check for channeling, abrasion, and settling. If problems are found, you must take corrective action consistent with the manufacturer's recommendations and conduct a new performance test to determine destruction efficiency according to § 63.5160.

(iii) *Other types of control devices*. If you use a control device other than an

oxidizer or a solvent recovery system for which you choose to comply by means of a monthly liquid-liquid material balance, or wish to monitor an alternative parameter and comply with a different operating limit, you must apply to the Administrator for approval of alternative monitoring under § 63.8(f).

(e) *Capture efficiency*. If you are required to determine capture efficiency to meet the requirements of § 63.5170(e)(2), (f)(1) through (2), (h)(2) through (4), or (i)(2) through (3), you must determine capture efficiency using the procedures in paragraph (e)(1), (2), or (3) of this section, as applicable.

(1) For an enclosure that meets the criteria for a PTE, you may assume it achieves 100 percent capture efficiency. You must confirm that your capture system is a PTE by demonstrating that it meets the requirements of section 6 of EPA Method 204 of 40 CFR part 51, appendix M (or an EPA approved alternative method), and that all exhaust gases from the enclosure are delivered to a control device.

(2) You may determine capture efficiency, CE, according to the protocols for testing with temporary total enclosures that are specified in Method 204A through F of 40 CFR part 51, appendix M. You may exclude never-controlled work stations from such capture efficiency determinations.

(3) As an alternative to the procedures specified in paragraphs (e)(1) and (2) of this section, if you are required to conduct a capture efficiency test, you may use any capture efficiency protocol and test methods that satisfy the criteria of either the Data Quality Objective or the Lower Confidence Limit approach as described in appendix A to subpart KK of this part. You may exclude never-controlled work stations from such capture efficiency determinations.

REQUIREMENTS FOR SHOWING COMPLIANCE

§ 63.5170 How do I demonstrate compliance with the standards?

You must include all coating materials (as defined in § 63.5110) used in the affected source when determining compliance with the applicable emission limit in § 63.5120. To make this determination, you must use at least one of the four compliance options listed in Table 1 of this section. You may apply any of the compliance options to an individual coil coating line, or to multiple lines as a group, or to the entire affected source. You may use different compliance options for different coil coating lines, or at different times on the same line. However, you may not use different compliance options at the same time on the same coil coating line. If you switch between compliance options for any coil coating line or group of lines, you must document this switch as required by § 63.5190(a), and you must report it in the next semiannual compliance report required in § 63.5180.

TABLE 1 TO § 63.5170.—COMPLIANCE DEMONSTRATION REQUIREMENTS INDEX

If you choose to demonstrate compliance by:	Then you must demonstrate that:
1. Use of ''as purchased'' compliant coatings.	a. Each coating material used during the 12-month compliance period does not exceed 0.046 kg HAP per liter solids, as purchased. Paragraph (a) of this section.
2. Use of ''as applied'' compliant coatings	a. Each coating material used does not exceed 0.046 kg HAP per liter solids on a rolling 12-month average as applied basis, determined monthly. Paragraphs (b)(1) of this section; or
	b. Average of all coating materials used does not exceed 0.046 kg HAP per liter solids on a rolling 12-month average as applied basis, determined monthly. Paragraph (b)(2) of this section.
3. Use of a capture system and control device.	Overall organic HAP control efficiency is at least 98 percent on a monthly basis for individual or groups of coil coating lines; or overall organic HAP control efficiency is at least 98 percent during initial performance test and operating limits are achieved continuously for individual coil coating lines; or oxidizer outlet HAP concentration is no greater than 20 ppmv and there is 100 percent capture efficiency during initial performance test and operating limits are achieved continuously for individual coil coating lines. Paragraph (c) of this section.

TABLE 1 TO § 63.5170.—COMPLIANCE DEMONSTRATION REQUIREMENTS INDEX—Continued

If you choose to demonstrate compliance by:	Then you must demonstrate that:
4. Use of a combination of compliant coatings and control devices and maintaining an acceptable equivalent emission rate.	Average equivalent emission rate does not exceed 0.046 kg HAP per liter solids on a rolling 12-month average as applied basis, determined monthly. Paragraph (d) of this section.

(a) *As-purchased compliant coatings.* If you elect to use coatings that individually meet the organic HAP emission limit in § 63.5120(a)(2) as-purchased, to which you will not add HAP during distribution or application, you must demonstrate that each coating material applied during the 12-month compliance period contains no more than 0.046 kg HAP per liter of solids on an as-purchased basis.

(1) Determine the organic HAP content for each coating material in accordance with § 63.5160(b) and the volume solids content in accordance with § 63.5160(c).

(2) Combine these results using Equation 1 of this section and compare the result to the organic HAP emission limit in § 63.5120(a)(2) to demonstrate that each coating material contains no more organic HAP than the limit.

$$H_{siap} = \frac{C_{hi} D_i}{V_{si}} \qquad \text{(Eq. 1)}$$

Where:

H_{siap} = as-purchased, organic HAP to solids ratio of coating material, i, kg organic HAP/liter solids applied.

C_{hi} = organic HAP content of coating material, i, expressed as a weight-fraction, kg/kg.

D_i = density of coating material, i, kg/l.

Vsi = volume fraction of solids in coating, i, l/l.

(b) *As-applied compliant coatings.* If you choose to use ''as-applied'' compliant coatings, you must demonstrate that the average of each coating material applied during the 12-month compliance period contains no more than 0.046 kg of organic HAP per liter of solids applied in accordance with (b)(1) of this section, or demonstrate that the average of all coating materials applied during the 12-month compliance period contain no more than 0.046 kg of organic HAP per liter of solids applied in accordance with paragraph (b)(2) of this section.

(1) To demonstrate that the average organic HAP content on the basis of solids applied for each coating material applied, $H_{Si\ yr}$, is less than 0.046 kg HAP per liter solids applied for the 12-month compliance period, use Equation 2 of this section:

$$H_{Si\ yr} = \frac{\sum_{y=1}^{12}\left[V_i D_i C_{ahi} + \sum_{i=1}^{q} V_j D_j C_{hij}\right]}{\sum_{y=1}^{12} V_i V_{si}} \qquad \text{(Eq. 2)}$$

Where:

$H_{si\ yr}$ = average for the 12-month compliance period, as-applied, organic HAP to solids ratio of material, i, kg organic HAP/liter solids applied.

V_i = volume of coating material, i, l.

D_i = density of coating material, i, kg/l.

C_{ahi} = monthly average, as-applied, organic HAP content of solids-containing coating material, i, expressed as a weight fraction, kilogram (kg)/kg.

V_j = volume of solvent, j, l.

D_j = density of solvent, j, kg/l.

C_{hij} = organic HAP content of solvent, j, added to coating material, i, expressed as a weight fraction, kg/kg.

V_{si} = volume fraction of solids in coating, i, l/l.

y = identifier for months.
q = number of different solvents, thinners, reducers, diluents, or other non-solids-containing coating materials applied in a month.

(2) To demonstrte that the average organic HAP content on the basis of solids applied, $H_{S\ yr}$, of all coating materials applied is less than 0.046 kg HAP per liter solids applied for the 12-month compliance period, use Equation 3 of this section:

$$H_{S\,yr} = \frac{\sum_{y=1}^{12}\left[\sum_{i=1}^{p} V_i D_i C_{ahi} + \sum_{j=1}^{q} V_j D_j C_{hij}\right]}{\sum_{y=1}^{12}\left[\sum_{i=1}^{p} V_i V_{si}\right]} \qquad \text{(Eq. 3)}$$

Where:

$H_{S\ yr}$ = average for the 12-month compliance period, as-applied, organic HAP to solids ratio of all materials applied, kg organic HAP/liter solids applied.
Vi = volume of coating material, i, l.
D_i = density of coating material, i, kg/l.
C_{ahi} = monthly average, as-applied, organic HAP content of solids-containing coating material, i, expressed as a weight fraction, kilogram (kg)/kg.
Vj = volume of solvent, j, l.
D_j = density of solvent, j, kg/l.
C_{hij} = organic HAP content of solvent, j, added to coating material, i, expressed as a weight fraction, kg/kg.
Vsi = volume fraction of solids in coating, i, l/l.
p = number of different coating materials applied in a month.
q = number of different solvents, thinners, reducers, diluents, or other non-solids-containing coating materials applied in a month.
y = identifier for months.

(c) *Capture and control to reduce emissions to no more than the allowable limit.* If you use one or more capture systems and one or more control devices and demonstrate an average overall organic HAP control efficiency of at least 98 percent for each month to comply with § 63.5120(a)(1); or operate a capture system and oxidizer so that the capture efficiency is 100 percent and the oxidizer outlet HAP concentration is no greater than 20 ppmv on a dry basis to comply with § 63.5120(a)(3), you must follow one of the procedures in paragraphs (c)(1) through (4) of this section. Alternatively, you may demonstrate compliance for an individual coil coating line by operating its capture system and control device and continuous parameter monitoring system according to the procedures in paragraph (i) of this section.

(1) If the affected source uses one compliance procedure to limit organic HAP emissions to the level specified in § 63.5120(a)(1) or (2) and has only always-controlled work stations, then you must demonstrate compliance with the provisions of paragraph (e) of this section when emissions from the affected source are controlled by one or more solvent recovery devices.

(2) If the affected source uses one compliance procedure to limit organic HAP emissions to the level specified in § 63.5120(a)(1) or (2) and has only always-controlled work stations, then you must demonstrate compliance with the provisions of paragraph (f) of this section when emissions are controlled by one or more oxidizers.

(3) If the affected source operates both solvent recovery and oxidizer control devices, one or more never-controlled work stations, or one or more intermittently-controllable work stations, or uses more than one compliance procedure, then you must demonstrate compliance with the provisions of paragraph (g) of this section.

(4) The method of limiting organic HAP emissions to the level specified in § 63.5120(a)(3) is the installation and operation of a PTE around each work station and associated curing oven in the coating line and the ventilation of all organic HAP emissions from each PTE

to an oxidizer with an outlet organic HAP concentration of no greater than 20 ppmv on a dry basis. An enclosure that meets the requirements in § 63.5160(e)(1) is considered a PTE. Initial compliance of the oxidizer with the outlet organic HAP concentration limit is demonstrated either through continuous emission monitoring according to paragraph (c)(4)(ii) of this section or through performance tests using the procedure in § 63.5160(d). If this method is selected, you must meet the requirements of paragraph (c)(4)(i) of this section to demonstrate continuing achievement of 100 percent capture of organic HAP emissions and either paragraph (c)(4)(ii) or paragraph (c)(4)(iii) of this section, respectively, to demonstrate continuous compliance with the oxidizer outlet organic HAP concentration limit through continuous emission monitoring or continuous operating parameter monitoring:

(i) Whenever a work station is operated, continuously monitor the capture system operating parameter established in accordance with § 63.5150(a)(4).

(ii) To demonstrate that the value of the exhaust gas organic HAP concentration at the outlet of the oxidizer is no greater than 20 ppmv, on a dry basis, install, calibrate, operate, and maintain CEMS according to the requirements of § 63.5150(a)(2).

(iii) To demonstrate continuous compliance with operating limits established in accordance with § 63.5150(a)(3), whenever a work station is operated, continuously monitor the applicable oxidizer operating parameter.

(d) *Capture and control to achieve the emission rate limit*. If you use one or more capture systems and one or more control devices and limit the organic HAP emission rate to no more than 0.046 kg organic HAP emitted per liter of solids applied on a 12-month average as-applied basis, then you must follow one of the procedures in paragraphs (d)(1) through (3) of this section.

(1) If you use one or more solvent recovery devices, you must demonstrate compliance with the provisions in paragraph (e) of this section.

(2) If you use one or more oxidizers, you must demonstrate compliance with the provisions in paragraph (f) of this section.

(3) If you use both solvent recovery devices and oxidizers, or operate one or more never-controlled work stations or one or more intermittently controllable work stations, you must demonstrate compliance with the provisions in paragraph (g) of this section.

(e) *Use of solvent recovery to demonstrate compliance*. If you use one or more solvent recovery devices to control emissions from always-controlled work stations, you must show compliance by following the procedures in either paragraph (e)(1) or (2) of this section:

(1) *Liquid-liquid material balance*. Perform a liquid-liquid material balance for each month as specified in paragraphs (e)(1)(i) through (vi) of this section and use Equations 4 through 6 of this section to convert the data to units of this standard. All determinations of quantity of coating and composition of coating must be made at a time and location in the process after all ingredients (including any dilution solvent) have been added to the coating, or appropriate adjustments must be made to account for any ingredients added after the amount of coating has been determined.

(i) Measure the mass of each coating material applied on the work station or group of work stations controlled by one or more solvent recovery devices during the month.

(ii) If demonstrating compliance with the organic HAP emission rate based on solids applied, determine the organic HAP content of each coating material applied during the month following the procedure in § 63.5160(b).

(iii) Determine the volatile matter content of each coating material applied during the month following the procedure in § 63.5160(c).

(iv) If demonstrating compliance with the organic HAP emission rate based on solids applied, determine the solids content of each coating material applied during the month following the procedure in § 63.5160(c).

(v) For each solvent recovery device used to comply with § 63.5120(a), install, calibrate, maintain, and operate according to the manufacturer's specifications, a device that indicates the cumulative amount of volatile matter

recovered by the solvent recovery device on a monthly basis. The device must be initially certified by the manufacturer to be accurate to within ± 2.0 percent.

(vi) For each solvent recovery device used to comply with §63.5120(a), measure the amount of volatile matter recovered for the month.

(vii) *Recovery efficiency*, R_v. Calculate the volatile organic matter collection and recovery efficiency, R_v, using Equation 4 of this section:

$$R_v = 100 \frac{\sum_{k=1}^{s} M_{kvr}}{\sum_{i=1}^{p} M_i C_{vi} + \sum_{j=1}^{q} M_j} \qquad \text{(Eq. 4)}$$

Where:

R_v = organic volatile matter collection and recovery efficiency, percent.

M_{kvr} = mass of volatile matter recovered in a month by solvent recovery device, k, kg.

M_i = mass of coating material, i, applied in a month, kg.

C_{vi} = volatile matter content of coating material, i, expressed as a weight fraction, kg/kg.

M_j = mass of solvent, thinner, reducer, diluent, or other non-solids-containing coating material (excluding H_2O), j, applied in a month, kg.

p = number of different coating materials applied in a month.

q = number of different solvents, thinners, reducers, diluents, or other non-solids-containing coating materials applied in a month.

s = number of solvent recovery devices used to comply with the standard of §63.5120 of this subpart, in the facility.

(viii) *Organic HAP emitted*, H_e. Calculate the mass of organic HAP emitted during the month, H_e, using Equation 5 of this section:

$$H_e = \left[1 - \frac{R_v}{100}\right]\left[\sum_{i=1}^{p}\left(C_{hi}M_i + \sum_{j=1}^{q} C_{hij}M_{ij}\right)\right] \qquad \text{(Eq. 5)}$$

Where:

H_e = total monthly organic HAP emitted, kg.

R_v = organic volatile matter collection and recovery efficiency, percent.

C_{hi} = organic HAP content of coating material, i, expressed as a weight-fraction, kg/kg.

M_i = mass of coating material, i, applied in a month, kg.

C_{hij} = organic HAP content of solvent, j, added to coating material, i, expressed as a weight fraction, kg/kg.

M_{ij} = mass of solvent, thinner, reducer, diluent, or other non-solids-containing coating material, j, added to solids-containing coating material, i, in a month, kg.

p = number of different coating materials applied in a month.

q = number of different solvents, thinners, reducers, diluents, or other non-solids-containing coating materials applied in a month.

(ix) *Organic HAP emission rate based on solids applied for the 12-month compliance period*, L_{ANNUAL}. Calculate the organic HAP emission rate based on solids applied for the 12-month compliance period, L_{ANNUAL}, using Equation 6 of this section:

$$L_{ANNUAL} = \frac{\sum_{y=1}^{12} H_e}{\sum_{y=1}^{12}\left[\sum_{i=1}^{p} C_{si}M_i\right]} \qquad \text{(Eq. 6)}$$

Where:

L_{ANNUAL} = mass organic HAP emitted per volume of solids applied for the 12-month compliance period, kg/liter.

H_e = total monthly organic HAP emitted, kg.

C_{si} = solids content of coating material, i, expressed as liter of solids/kg of material.

M_i = mass of coating material, i, applied in a month, kg.

y = identifier for months.

p = number of different coating materials applied in a month.

(x) *Compare actual performance to performance required by compliance option*. The affected source is in compliance

with § 63.5120(a) if it meets the requirement in either paragraph (e)(1)(x)(A) or (B) of this section:

(A) The average volatile organic matter collection and recovery efficiency, R_v, is 98 percent or greater each month of the 12-month compliance period; or

(B) The organic HAP emission rate based on solids applied for the 12-month compliance period, L_{ANNUAL}, is 0.046 kg organic HAP per liter solids applied or less.

(2) *Continuous emission monitoring of control device performance.* Use continuous emission monitors to demonstrate recovery efficiency, conduct an initial performance test of capture efficiency and volumetric flow rate, and continuously monitor a site specific operating parameter to ensure that capture efficiency and volumetric flow rate are maintained following the procedures in paragraphs (e)(2)(i) through (xi) of this section:

(i) *Control device destruction or removal efficiency, DRE.* For each control device used to comply with § 63.5120(a), continuously monitor the gas stream entering and exiting the control device to determine the total volatile organic matter mass flow rate (e.g., by determining the concentration of the vent gas in grams per cubic meter and the volumetric flow rate in cubic meters per second, such that the total volatile organic matter mass flow rate in grams per second can be calculated using Equation 1 of § 63.5160, and the percent destruction or removal efficiency, DRE, of the control device can be calculated for each month using Equation 2 of § 63.5160.

(ii) Determine the percent capture efficiency, CE, for each work station in accordance with § 63.5160(e).

(iii) *Capture efficiency monitoring.* Whenever a work station is operated, continuously monitor the operating parameter established in accordance with § 63.5150(a)(4).

(iv) *Control efficiency, R.* Calculate the overall organic HAP control efficiency, R, achieved for each month using Equation 7 of this section:

$$R = 100\,\frac{\sum_{A=1}^{w}\left[\left(DRE_K CE_A\right)\left(\sum_{i=1}^{p} M_{Ai} C_{vi} + \sum_{j=1}^{q} M_{Aj}\right)\right]}{\sum_{i=1}^{p} M_i C_{vi} + \sum_{j=1}^{q} M_j} \qquad \text{(Eq. 7)}$$

Where:

R=overall organic HAP control efficiency, percent.

DRE_k=organic volatile matter destruction or removal efficiency of control device, k, percent.

CE_A=organic volatile matter capture efficiency of the capture system for work station, A, percent.

M_{Ai}=mass of coating material, i, applied on work station, A, in a month, kg.

C_{vi}=volatile matter content of coating material, i, expressed as a weight fraction, kg/kg.

M_{Aj}=mass of solvent, thinner, reducer, diluent, or other non-solids-containing coating material (including H_2O), j, applied on work station, A, in a month, kg.

M_i=mass of coating material, i, applied in a month, kg.

M_j=mass of solvent, thinner, reducer, diluent, or other non-solids-containing coating material (excluding H_2O), j, applied in a month, kg.

w=number of always-controlled work stations in the facility.

p=number of different coating materials applied in a month.

q=number of different solvents, thinners, reducers, diluents, or other non-solids-containing coating materials applied in a month.

(v) If demonstrating compliance with the organic HAP emission rate based on solids applied, measure the mass of each coating material applied on each work station during the month.

(vi) If demonstrating compliance with the organic HAP emission rate based on solids applied, determine the organic HAP content of each coating material applied during the month in accordance with § 63.5160(b).

(vii) If demonstrating compliance with the organic HAP emission rate based on solids applied, determine the solids content of each coating material applied during the month in accordance with § 63.5160(c).

(viii) If demonstrating compliance with the organic HAP emission rate based on solids applied, calculate the organic HAP emitted during the

month, H_e, for each month using Equation 8 of this section:

$$H_e = \sum_{A=1}^{w}\left[\left(1-\left(DRE_K CE_A\right)\right)\left(\sum_{i=1}^{p}\left(C_{hi}M_{Ai}+\sum_{j=1}^{q}C_{hij}M_{Aij}\right)\right)\right] \qquad \text{(Eq. 8)}$$

Where:

H_e=total monthly organic HAP emitted, kg.

DRE_k=organic volatile matter destruction or removal efficiency of control device, k, percent.

CE_A=organic volatile matter capture efficiency of the capture system for work station, A, percent.

C_{hi}=organic HAP content of coating material, i, expressed as a weight-fraction, kg/kg.

M_{Ai}=mass of coating material, i, applied on work station, A, in a month, kg.

C_{hij}=organic HAP content of solvent, j, added to coating material, i, expressed as a weight fraction, kg/kg.

M_{Aij}=mass of solvent, thinner, reducer, diluent, or other non-solids-containing coating material, j, added to solids-containing coating material, i, applied on work station, A, in a month, kg.

w=number of always-controlled work stations in the facility.

p=number of different coating materials applied in a month.

q=number of different solvents, thinners, reducers, diluents, or other non-solids-containing coating materials applied in a month.

(ix) *Organic HAP emission rate based on solids applied for the 12-month compliance period, L_{ANNUAL}.* Calculate the organic HAP emission rate based on solids applied for the 12-month compliance period, L_{ANNUAL}, using Equation 6 of this section.

(x) *Compare actual performance to performance required by compliance option.* The affected source is in compliance with § 63.5120(a) if each capture system operating parameter is operated at an average value greater than or less than (as appropriate) the operating parameter value established in accordance with § 63.5150 for each 3-hour period; and

(A) The overall organic HAP control efficiency, R, is 98 percent or greater for each; or

(B) The organic HAP emission rate based on solids applied for the 12-month compliance period, L_{ANNUAL}, is 0.046 kg organic HAP per liter solids applied or less.

(f) *Use of oxidation to demonstrate compliance.* If you use one or more oxidizers to control emissions from always controlled work stations, you must follow the procedures in either paragraph (f)(1) or (2) of this section:

(1) *Continuous monitoring of capture system and control device operating parameters.* Demonstrate initial compliance through performance tests of capture efficiency and control device efficiency and continuing compliance through continuous monitoring of capture system and control device operating parameters as specified in paragraphs (f)(1)(i) through (xi) of this section:

(i) For each oxidizer used to comply with § 63.5120(a), determine the oxidizer destruction or removal efficiency, DRE, using the procedure in § 63.5160(d).

(ii) Whenever a work station is operated, continuously monitor the operating parameter established in accordance with § 63.5150(a)(3).

(iii) Determine the capture system capture efficiency, CE, for each work station in accordance with § 63.5160(e).

(iv) Whenever a work station is operated, continuously monitor the operating parameter established in accordance with § 63.5150(a)(4).

(v) Calculate the overall organic HAP control efficiency, R, achieved using Equation 7 of this section.

(vi) If demonstrating compliance with the organic HAP emission rate based on solids applied, measure the mass of each coating material applied on each work station during the month.

(vii) If demonstrating compliance with the organic HAP emission rate based on solids applied, determine the organic HAP content of each coating

material applied during the month following the procedure in § 63.5160(b).

(viii) If demonstrating compliance with the organic HAP emission rate based on solids applied, determine the solids content of each coating material applied during the month following the procedure in § 63.5160(c).

(ix) Calculate the organic HAP emitted during the month, H_e, for each month:

(A) For each work station and its associated oxidizer, use Equation 8 of this section.

(B) For periods when the oxidizer has not operated within its established operating limit, the control device efficiency is determined to be zero.

(x) *Organic HAP emission rate based on solids applied for the 12-month compliance period,* L_{ANNUAL}. If demonstrating compliance with the organic HAP emission rate based on solids applied for the 12-month compliance period, calculate the organic HAP emission rate based on solids applied, L_{ANNUAL}, for the 12-month compliance period using Equation 6 of this section.

(xi) *Compare actual performance to performance required by compliance option.* The affected source is in compliance with § 63.5120(a) if each oxidizer is operated such that the average operating parameter value is greater than the operating parameter value established in § 63.5150(a)(3) for each 3-hour period, and each capture system operating parameter average value is greater than or less than (as appropriate) the operating parameter value established in § 63.5150(a)(4) for each 3-hour period; and the requirement in either paragraph (f)(1)(xi)(A) or (B) of this section is met.

(A) The overall organic HAP control efficiency, R, is 98 percent or greater for each; or

(B) The organic HAP emission rate based on solids applied, L_{ANNUAL}, is 0.046 kg organic HAP per liter solids applied or less for the 12-month compliance period.

(2) *Continuous emission monitoring of control device performance.* Use continuous emission monitors, conduct an initial performance test of capture efficiency, and continuously monitor a site specific operating parameter to ensure that capture efficiency is maintained. Compliance must be demonstrated in accordance with paragraph (e)(2) of this section.

(g) *Combination of capture and control.* You must demonstrate compliance according to the procedures in paragraphs (g)(1) through (8) of this section if both solvent recovery and oxidizer control devices, one or more never controlled coil coating stations, or one or more intermittently controllable coil coating stations are operated; or more than one compliance procedure is used.

(1) *Solvent recovery system using liquid/liquid material balance compliance demonstration.* For each solvent recovery system used to control one or more work stations for which you choose to comply by means of a liquid-liquid material balance, you must determine the organic HAP emissions each month of the 12-month compliance period for those work stations controlled by that solvent recovery system according to either paragraph (g)(1)(i) or (ii) of this section:

(i) In accordance with paragraphs (e)(1)(i) through (iii) and (e)(1)(v) through (viii) of this section if the work stations controlled by that solvent recovery system are only always-controlled work stations; or

(ii) In accordance with paragraphs (e)(1)(ii) through (iii), (e)(1)(v) through (vi), and (h) of this section if the work stations controlled by that solvent recovery system include one or more never-controlled or intermittently-controllable work stations.

(2) *Solvent recovery system using performance test and continuous monitoring compliance demonstration.* For each solvent recovery system used to control one or more coil coating stations for which you choose to comply by means of an initial test of capture efficiency, continuous emission monitoring of the control device, and continuous monitoring of a capture system operating parameter, each month of the 12-month compliance period you must meet the requirements of paragraphs (g)(2)(i) and (ii) of this section:

(i) For each capture system delivering emissions to that solvent recovery system, monitor an operating parameter established in § 63.5150(a)(4) to ensure that capture system efficiency is maintained; and

(ii) Determine the organic HAP emissions for those work stations served by each capture system delivering emissions to that solvent recovery system according to either paragraph (g)(2)(ii)(A) or (B) of this section:

(A) In accordance with paragraphs (e)(2)(i) through (iii) and (e)(2)(v) through (viii) of this section if the work stations served by that capture system are only always-controlled coil coating stations; or

(B) In accordance with paragraphs (e)(2)(i) through (iii), (e)(2)(v) through (vii), and (h) of this section if the work stations served by that capture system include one or more never-controlled or intermittently-controllable work stations.

(3) *Oxidizer using performance test and continuous monitoring of operating parameters compliance demonstration.* For each oxidizer used to control emissions from one or more work stations for which you choose to demonstrate compliance through performance tests of capture efficiency, control device efficiency, and continuing compliance through continuous monitoring of capture system and control device operating parameters, each month of the 12-month compliance period you must meet the requirements of paragraphs (g)(3)(i) through (iii) of this section:

(i) Monitor an operating parameter established in §63.5150(a)(3) to ensure that control device destruction or removal efficiency is maintained; and

(ii) For each capture system delivering emissions to that oxidizer, monitor an operating parameter established in §63.5150(a)(4) to ensure capture efficiency; and

(iii) Determine the organic HAP emissions for those work stations served by each capture system delivering emissions to that oxidizer according to either paragraph (g)(3)(iii)(A) or (B) of this section:

(A) In accordance with paragraphs (f)(1)(i) through (v) and (ix) of this section if the work stations served by that capture system are only always-controlled work stations; or

(B) In accordance with paragraphs (f)(1)(i) through (v), (ix), and (h) of this section if the work stations served by that capture system include one or more never-controlled or intermittently-controllable work stations.

(4) *Oxidizer using continuous emission monitoring compliance demonstration.* For each oxidizer used to control emissions from one or more work stations for which you choose to demonstrate compliance through an initial capture efficiency test, continuous emission monitoring of the control device, and continuous monitoring of a capture system operating parameter, each month of the 12-month compliance period you must meet the requirements in paragraphs (g)(4)(i) and (ii) of this section:

(i) For each capture system delivering emissions to that oxidizer, monitor an operating parameter established in §63.5150(a)(4) to ensure capture efficiency; and

(ii) Determine the organic HAP emissions for those work stations served by each capture system delivering emissions to that oxidizer according to either paragraph (g)(4)(ii)(A) or (B) of this section:

(A) In accordance with paragraphs (e)(2)(i) through (iii) and (e)(2)(v) through (viii) of this section if the work stations served by that capture system are only always-controlled work stations; or

(B) In accordance with paragraphs (e)(2)(i) through (iii), (e)(2)(v) through (vii), and (h) of this section if the work stations served by that capture system include one or more never-controlled or intermittently-controllable work stations.

(5) *Uncontrolled work stations.* For uncontrolled work stations, each month of the 12-month compliance period you must determine the organic HAP applied on those work stations using Equation 9 of this section. The organic HAP emitted from an uncontrolled work station is equal to the organic HAP applied on that work station:

$$H_m = \sum_{A=1}^{x} \left(\sum_{i=1}^{p} C_{hi} M_{Ai} + \sum_{j=1}^{q} C_{hij} M_{Aij} \right) \qquad \text{(Eq. 9)}$$

Where:

H_m=facility total monthly organic HAP applied on uncontrolled coil coating stations, kg.

C_{hi}=organic HAP content of coating material, i, expressed as a weight-fraction, kg/kg.

M_{Ai}=mass of coating material, i, applied on work station, A, in a month, kg.

C_{hij}=organic HAP content of solvent, j, added to coating material, i, expressed as a weight fraction, kg/kg.

M_{Aij}=mass of solvent, thinner, reducer, diluent, or other non-solids-containing coating material, j, added to solids-containing coating material, i, applied on work station, A, in a month, kg.

x=number of uncontrolled work stations in the facility.

p=number of different coating materials applied in a month.

q=number of different solvents, thinners, reducers, diluents, or other non-solids-containing coating materials applied in a month.

(6) If demonstrating compliance with the organic HAP emission rate based on solids applied, each month of the 12-month compliance period you must determine the solids content of each coating material applied during the month following the procedure in § 63.5160(c).

(7) *Organic HAP emitted.* You must determine the organic HAP emissions for the affected source for each 12-month compliance period by summing all monthly organic HAP emissions calculated according to paragraphs (g)(1), (g)(2)(ii), (g)(3)(iii), (g)(4)(ii), and (g)(5) of this section.

(8) *Compare actual performance to performance required by compliance option.* The affected source is in compliance with § 63.5120(a) for the 12-month compliance period if all operating parameters required to be monitored under paragraphs (g)(2) through (4) of this section were maintained at the values established in § 63.5150; and it meets the requirement in either paragraph (g)(8)(i) or (ii) of this section.

(i) The total mass of organic HAP emitted by the affected source was not more than 0.046 kg HAP per liter of solids applied for the 12-month compliance period; or

(ii) The total mass of organic HAP emitted by the affected source was not more than 2 percent of the total mass of organic HAP applied by the affected source each month. You must determine the total mass of organic HAP applied by the affected source in each month of the 12-month compliance period using Equation 9 of this section.

(h) *Organic HAP emissions from intermittently-controllable or never-controlled coil coating stations.* If you have been expressly referenced to this paragraph by paragraphs (g)(1)(ii), (g)(2)(ii)(B), (g)(3)(iii)(B), or (g)(4)(ii)(B) of this section for calculation procedures to determine organic HAP emissions, you must for your intermittently-controllable or never-controlled work stations meet the requirements of paragraphs (h)(1) through (6) of this section:

(1) Determine the sum of the mass of all solids-containing coating materials which are applied on intermittently-controllable work stations in bypass mode, and the mass of all solids-containing coating materials which are applied on never-controlled coil coating stations during each month of the 12-month compliance period, M_{Bi}.

(2) Determine the sum of the mass of all solvents, thinners, reducers, diluents, and other nonsolids-containing coating materials which are applied on intermittently-controllable work stations in bypass mode, and the mass of all solvents, thinners, reducers, diluents and other nonsolids-containing coating materials which are applied on never-controlled work stations during each month of the 12-month compliance period, M_{Bj}.

(3) Determine the sum of the mass of all solids-containing coating materials which are applied on intermittently-controllable work stations in controlled mode, and the mass of all solids-containing coating materials which are applied on always-controlled work stations during each month of the 12-month compliance period, M_{Ci}.

(4) Determine the sum of the mass of all solvents, thinners, reducers, diluents, and other nonsolids-containing coating materials which are applied on intermittently-controllable work stations in controlled mode, and the mass of all solvents, thinners, reducers, diluents, and other nonsolids-containing coating materials which are applied on always-controlled work stations during each month of the 12-month compliance period, M_{Cj}.

(5) *Liquid-liquid material balance calculation of HAP emitted.* For each work station or group of work stations for which you use the provisions of paragraph (g)(1)(ii) of this section, you must calculate the organic HAP emitted during the month using Equation 10 of this section:

$$H_e = \left[\sum_{i=1}^{p} M_{Ci}C_{hi} + \sum_{j=1}^{q} M_{Cj}C_{hj}\right]\left[1 - \frac{\sum_{k=1}^{s} M_{kvr}}{\sum_{i=1}^{p} M_{Ci}C_{vi} + \sum_{j=1}^{q} M_{Cj}}\right] + \left[\sum_{i=1}^{p} M_{Bi}C_{hi} + \sum_{j=1}^{q} M_{Bj}C_{hj}\right] \quad \text{(Eq. 10)}$$

Where:

H_e = total monthly organic HAP emitted, kg.

M_{ci}= sum of the mass of solids-containing coating material, i, applied on intermittently-controllable work stations operating in controlled mode and the mass of solids-containing coating material, i, applied on always-controlled work stations, in a month, kg.

C_{hi} = organic HAP content of coating material, i, expressed as a weight-fraction, kg/kg.

M_{cj} = sum of the mass of solvent, thinner, reducer, diluent, or other non-solids-containing coating material, j, applied on intermittently-controllable work stations operating in controlled mode and the mass of solvent, thinner, reducer, diluent, or other non-solids-containing coating material, j, applied on always-controlled work stations in a month, kg.

C_{hj} = organic HAP content of solvent, j, expressed as a weight fraction, kg/kg.

M_{kvr} = mass of volatile matter recovered in a month by solvent recovery device, k, kg.

C_{vi} = volatile matter content of coating material, i, expressed as a weight fraction, kg/kg.

M_{Bi} = sum of the mass of solids-containing coating material, i, applied on intermittently-controllable work stations operating in bypass mode and the mass of solids-containing coating material, i, applied on never-controlled work stations, in a month, kg.

M_{Bj} = sum of the mass of solvent, thinner, reducer, diluent, or other non-solids-containing coating material, j, applied on intermittently-controllable work stations operating in bypass mode and the mass of solvent, thinner, reducer, diluent, or other non-solids-containing coating material, j, applied on never-controlled work stations, in a month, kg.

p = number of different coating materials applied in a month.

q = number of different solvents, thinners, reducers, diluents, or other non-solids-containing coating materials applied in a month.

s = number of solvent recovery devices used to comply with the standard of § 63.5120 of this subpart, in the facility.

(6) *Control efficiency calculation of HAP emitted.* For each work station or group of work stations for which you use the provisions of paragraphs (g)(2)(ii)(B), (g)(3)(iii)(B), or (g)(4)(ii)(B) of this section, you must calculate the organic HAP emitted during the month, H_e, using Equation 11 of this section:

$$e = \sum_{A=1}^{w_i}\left[\left(\sum_{i=1}^{p} M_{Ci}C_{hi} + \sum_{j=1}^{q} M_{Cj}C_{hj}\right)\left(1 - DRE_K CE_A\right)\right] + \left[\sum_{i=1}^{p} M_{Bi}C_{hi} + \sum_{j=1}^{q} M_{Bj}C_{hj}\right] \quad \text{(Eq. 11)}$$

Where:

H_e = total monthly organic HAP emitted, kg.

M_{ci} = sum of the mass of solids-containing coating material, i, applied on intermittently-controllable work stations operating in controlled mode and the mass of solids-containing coating material, i, applied on always-controlled work stations, in a month, kg.

C_{hi} = organic HAP content of coating material, i, expressed as a weight-fraction, kg/kg.

M_{cj} = sum of the mass of solvent, thinner, reducer, diluent, or other non-solids-containing coating material, j, applied on intermittently-controllable work stations operating in controlled mode and the mass of solvent, thinner, reducer, diluent, or other non-solids-containing coating material, j, applied on always-controlled work stations in a month, kg.

C_{hj} = organic HAP content of solvent, j, expressed as a weight fraction, kg/kg.

DRE_k = organic volatile matter destruction or removal efficiency of control device, k, percent.

CE_A = organic volatile matter capture efficiency of the capture system for work station, A, percent.

M_{Bi} = sum of the mass of solids-containing coating material, i, applied on intermittently-controllable work stations operating in bypass mode and the mass of solids-containing coating material, i, applied on never-controlled work stations, in a month, kg.

M_{Bj} = sum of the mass of solvent, thinner, reducer, diluent, or other non-solids-containing coating material, j, applied on intermittently-controllable work stations operating in bypass mode and the mass of solvent, thinner, reducer, diluent, or other non-solids-containing coating material, j, applied on never-controlled work stations, in a month, kg.

w_i = number of intermittently-controllable work stations in the facility.

p = number of different coating materials applied in a month.

q = number of different solvents, thinners, reducers, diluents, or other non-solids-containing coating materials applied in a month.

(i) *Capture and control system compliance demonstration procedures using a CPMS for a coil coating line.* If you use an add-on control device, to demonstrate initial compliance for each capture system and each control device through performance tests and continuing compliance through continuous monitoring of capture system and control device operating parameters, you must meet the requirements in paragraphs (i)(1) through (3) of this section.

(1) Conduct an initial performance test to determine the control device destruction or removal efficiency, DRE, using the applicable test methods and procedures in § 63.5160(d).

(2) Determine the emission capture efficiency, CE, in accordance with § 63.5160(e).

(3) Whenever a coil coating line is operated, continuously monitor the operating parameters established according to § 63.5150(a)(3) and (4) to ensure capture and control efficiency.

REPORTING AND RECORDKEEPING

§ 63.5180 What reports must I submit?

(a) Submit the reports specified in paragraphs (b) through (i) of this section to the EPA Regional Office that serves the State or territory in which the affected source is located and to the delegated State agency:

(b) You must submit an initial notification required in § 63.9(b).

(1) Submit an initial notification for an existing source no later than 2 years after June 10, 2002.

(2) Submit an initial notification for a new or reconstructed source as required by § 63.9(b).

(3) For the purpose of this subpart, a title V permit application may be used in lieu of the initial notification required under § 63.9(b), provided the same information is contained in the permit application as required by § 63.9(b), and the State to which the permit application has been submitted has an approved operating permit program under part 70 of this chapter and has received delegation of authority from the EPA.

(4) Submit a title V permit application used in lieu of the initial notification required under § 63.9(b) by the same due dates as those specified in paragraphs (b)(1) and (2) of this section for the initial notifications.

(c) You must submit a Notification of Performance Test as specified in §§ 63.7 and 63.9(e) if you are complying with the emission standard using a control device. This notification and the site-specific test plan required under § 63.7(c)(2) must identify the operating parameter to be monitored to ensure that the capture efficiency measured

during the performance test is maintained. You may consider the operating parameter identified in the site-specific test plan to be approved unless explicitly disapproved, or unless comments received from the Administrator require monitoring of an alternate parameter.

(d) You must submit a Notification of Compliance Status as specified in §63.9(h). You must submit the Notification of Compliance Status no later than 30 calendar days following the end of the initial 12-month compliance period described in §63.5130.

(e) You must submit performance test reports as specified in §63.10(d)(2) if you are using a control device to comply with the emission standards and you have not obtained a waiver from the performance test requirement.

(f) You must submit start-up, shutdown, and malfunction reports as specified in §63.10(d)(5) if you use a control device to comply with this subpart.

(1) If your actions during a start-up, shutdown, or malfunction of an affected source (including actions taken to correct a malfunction) are not completely consistent with the procedures specified in the source's start-up, shutdown, and malfunction plan specified in §63.6(e)(3), you must state such information in the report. The start-up, shutdown, or malfunction report will consist of a letter containing the name, title, and signature of the responsible official who is certifying its accuracy, that will be submitted to the Administrator.

(2) Separate start-up, shutdown, or malfunction reports are not required if the information is included in the report specified in paragraph (g) of this section.

(g) You must submit semi-annual compliance reports containing the information specified in paragraphs (g)(1) and (2) of this section.

(1) Compliance report dates.

(i) The first compliance report must cover the period beginning on the compliance date that is specified for your affected source in §63.5130(a) and ending on June 30 or December 31, whichever date is the first date following the end of the first calendar half after the compliance date that is specified for your source in §63.5130(a).

(ii) The first compliance report must be postmarked or delivered no later than July 31 or January 31, whichever date follows the end of the first calendar half after the compliance date that is specified for your affected source in §63.5130(a).

(iii) Each subsequent compliance report must cover the semiannual reporting period from January 1 through June 30 or the semiannual reporting period from July 1 through December 31.

(iv) Each subsequent compliance report must be postmarked or delivered no later than July 31 or January 31, whichever date is the first date following the end of the semiannual reporting period.

(v) For each affected source that is subject to permitting regulations pursuant to 40 CFR part 70 or part 71, and the permitting authority has established dates for submitting semiannual reports pursuant to 40 CFR 70.6(a)(3)(iii)(A) or 40 CFR 71.6(a)(3)(iii)(A), you may submit the first and subsequent compliance reports according to the dates the permitting authority has established instead of according to the dates in paragraphs (g)(1)(i) through (iv) of this section.

(2) The semi-annual compliance report must contain the following information:

(i) Company name and address.

(ii) Statement by a responsible official with that official's name, title, and signature, certifying the accuracy of the content of the report.

(iii) Date of report and beginning and ending dates of the reporting period. The reporting period is the 6-month period ending on June 30 or December 31. Note that the information reported for each of the 6 months in the reporting period will be based on the last 12 months of data prior to the date of each monthly calculation.

(iv) Identification of the compliance option or options specified in Table 1 to §63.5170 that you used on each coating operation during the reporting period. If you switched between compliance options during the reporting period,

you must report the beginning dates you used each option.

(v) A statement that there were no deviations from the standards during the reporting period, and that no CEMS were inoperative, inactive, malfunctioning, out-of-control, repaired, or adjusted.

(h) You must submit, for each deviation occurring at an affected source where you are not using CEMS to comply with the standards in this subpart, the semi-annual compliance report containing the information in paragraphs (g)(2)(i) through (iv) of this section and the information in paragraphs (h)(1) through (3) of this section:

(1) The total operating time of each affected source during the reporting period.

(2) Information on the number, duration, and cause of deviations (including unknown cause, if applicable) as applicable, and the corrective action taken.

(3) Information on the number, duration, and cause for monitor downtime incidents (including unknown cause other than downtime associated with zero and span and other daily calibration checks, if applicable).

(i) You must submit, for each deviation occurring at an affected source where you are using CEMS to comply with the standards in this subpart, the semi-annual compliance report containing the information in paragraphs (g)(2)(i) through (iv) of this section, and the information in paragraphs (i)(1) through (12) of this section:

(1) The date and time that each malfunction started and stopped.

(2) The date and time that each CEMS was inoperative, except for zero (low-level) and high-level checks.

(3) The date and time that each CEMS was out-of-control, including the information in § 63.8(c)(8).

(4) The date and time that each deviation started and stopped, and whether each deviation occurred during a period of start-up, shutdown, or malfunction or during another period.

(5) A summary of the total duration of the deviation during the reporting period, and the total duration as a percent of the total source operating time during that reporting period.

(6) A breakdown of the total duration of the deviations during the reporting period into those that are due to start-up, shutdown, control equipment problems, process problems, other known causes, and other unknown causes.

(7) A summary of the total duration of CEMS downtime during the reporting period, and the total duration of CEMS downtime as a percent of the total source operating time during that reporting period.

(8) A breakdown of the total duration of CEMS downtime during the reporting period into periods that are due to monitoring equipment malfunctions, nonmonitoring equipment malfunctions, quality assurance/quality control calibrations, other known causes, and other unknown causes.

(9) A brief description of the metal coil coating line.

(10) The monitoring equipment manufacturer(s) and model number(s).

(11) The date of the latest CEMS certification or audit.

(12) A description of any changes in CEMS, processes, or controls since the last reporting period.

§ 63.5190 What records must I maintain?

(a) You must maintain the records specified in paragraphs (a) and (b) of this section in accordance with § 63.10(b)(1):

(1) Records of the coating lines on which you used each compliance option and the time periods (beginning and ending dates and times) you used each option.

(2) Records specified in § 63.10(b)(2) of all measurements needed to demonstrate compliance with this subpart, including:

(i) Continuous emission monitor data in accordance with § 63.5150(a)(2);

(ii) Control device and capture system operating parameter data in accordance with § 63.5150(a)(1), (3), and (4);

(iii) Organic HAP content data for the purpose of demonstrating compliance in accordance with § 63.5160(b);

(iv) Volatile matter and solids content data for the purpose of demonstrating compliance in accordance with § 63.5160(c);

(v) Overall control efficiency determination or alternative outlet HAP concentration using capture efficiency tests and control device destruction or

removal efficiency tests in accordance with § 63.5160(d), (e), and (f); and

(vi) Material usage, HAP usage, volatile matter usage, and solids usage and compliance demonstrations using these data in accordance with § 63.5170(a), (b), and (d);

(3) Records specified in § 63.10(b)(3); and

(4) Additional records specified in § 63.10(c) for each continuous monitoring system operated by the owner or operator in accordance with § 63.5150(a)(2).

(b) Maintain records of all liquid-liquid material balances that are performed in accordance with the requirements of § 63.5170.

DELEGATION OF AUTHORITY

§ 63.5200 What authorities may be delegated to the States?

(a) This subpart can be implemented and enforced by us, the EPA, or a delegated authority such as your State, local, or tribal agency. If the EPA Administrator has delegated authority to your State, local, or tribal agency, then that agency has the authority to implement and enforce this subpart. You should contact your EPA Regional Office to find out if this subpart is delegated to your State, local, or tribal agency.

(b) In delegating implementation and enforcement authority of this subpart to a State, local, or tribal agency under section 40 CFR part 63, subpart E, the authorities contained in paragraph (c) of this section are retained by the EPA Administrator and not transferred to the State, local, or tribal agency.

(c) Authority which will not be delegated to States, local, or tribal agencies:

(1) Approval of alternatives to the emission limitations in § 63.5120;

(2) Approval of major alternatives to test methods under § 63.7(e)(2)(ii) and (f) and as defined in § 63.5160;

(3) Approval of major alternatives to monitoring under § 63.8(f) and as defined in § 63.5150; and

(4) Approval of major alternatives to recordkeeping and reporting under § 63.10(f) and as defined in §§ 63.5180 and 63.5190.

§§ 63.5201—63.5209 [Reserved]

TABLES TO SUBPART SSSS OF PART 63

If you are required to comply with operating limits by § 63.5121, you must comply with the applicable operating limits in the following table:

TABLE 1 TO SUBPART SSSS OF PART 63.—OPERATING LIMITS IF USING ADD-ON CONTROL DEVICES AND CAPTURE SYSTEM

For the following device . . .	You must meet the following operating limit . . .	And you must demonstrate continuous compliance with the operating limit by . . .
1. thermal oxidizer	a. the average combustion temperature in any 3-hour period must not fall below the combustion temperature limit established according to § 63.5160(d)(3)(i).	i. collecting the combustion temperature data according to § 63.5150(a)(3); ii. reducing the data to 3-hour block averages; and iii. maintaining the 3-hour average combustion temperature at or above the temperature limit.
2. catalytic oxidizer	a. the average temperature measured just before the catalyst bed in any 3-hour period must not fall below the limit established according to § 63.5160(d)(3)(ii); and either	i. collecting the temperature data according to § 63.5150(a)(3); ii. reducing the data to 3-hour block averages; and iii. maintaining the 3-hour average temperature before the catalyst bed at or above the temperature limit.
	b. ensure that the average temperature difference across the catalyst bed in any 3-hour period does not fall below the temperature difference limit established according to § 63.5160(d)(3)(ii); or	i. collecting the temperature data according to § 63.5150(a)(3); ii. reducing the data to 3-hour block averages; and iii. maintaining the 3-hour average temperature difference at or above the temperature difference limit.

For the following device . . .	You must meet the following operating limit . . .	And you must demonstrate continuous compliance with the operating limit by . . .
	c. develop and implement an inspection and maintenance plan according to § 63.5160(d)(3)(ii).	maintaining an up-to-date inspection and maintenance plan, records of annual catalyst activity checks, records of monthly inspections of the oxidizer system, and records of the annual internal inspections of the catalyst bed. If a problem is discovered during a monthly or annual inspection required by § 63.5160(d)(3)(ii), you must take corrective action as soon as practicable consistent with the manufacturer's recommendations.
3. emission capture system	develop a monitoring plan that identifies operating parameter to be monitored and specifies operating limits according to § 63.5150(a)(4).	conducting monitoring according to the plan § 63.5150(a)(4).

You must comply with the applicable General Provisions requirements according to the following table:

TABLE 2 TO SUBPART SSSS OF PART 63.—APPLICABILITY OF GENERAL PROVISIONS TO SUBPART SSSS

General provisions reference	Applicable to subpart SSSS	Explanation
§ 63.1(a)(1)–(4)	Yes.	
§ 63.1(a)(5)	No	Reserved.
§ 63.1(a)(6)–(8)	Yes.	
§ 63.1(a)(9)	No	Reserved.
§ 63.1(a)(10)–(14)	Yes.	
§ 63.1(b)(1)	No	Subpart SSSS specifies applicability.
§ 63.1(b)(2)–(3)	Yes.	
§ 63.1(c)(1)	Yes.	
§ 63.1(c)(2)	Yes.	
§ 63.1(c)(3)	No	Reserved.
§ 63.1(c)(4)	Yes.	
§ 63.1(c)(5)	Yes.	
§ 63.1(d)	No	Reserved.
§ 63.1(e)	Yes.	
§ 63.2	Yes	Additional definitions in subpart SSSS.
§ 63.3(a)–(c)	Yes.	
§ 63.4(a)(1)–(3)	Yes.	
§ 63.4(a)(4)	No	Reserved.
§ 63.4(a)(5)	Yes.	
§ 63.4(b)–(c)	Yes.	
§ 63.5(a)(1)–(2)	Yes.	
§ 63.5(b)(1)	Yes.	
§ 63.5(b)(2)	No	Reserved.
§ 63.5(b)(3)–(6)	Yes.	
§ 63.5(c)	No	Reserved.
§ 63.5(d)	Yes	Only total HAP emissions in terms of tons per year are required for § 63.5(d)(1)(ii)(H).
§ 63.5(e)	Yes.	
§ 63.5(f)	Yes.	
§ 63.6(a)	Yes.	
§ 63.6(b)(1)–(5)	Yes.	
§ 63.6(b)(6)	No	Reserved.
§ 63.6(b)(7)	Yes.	
§ 63.6(c)(1)–(2)	Yes.	
§ 63.6(c)(3)–(4)	No	Reserved.
§ 63.6(c)(5)	Yes.	
§ 63.6(d)	No	Reserved.
§ 63.6(e)	Yes	Provisions in § 63.6(e)(3) pertaining to startups, shutdowns, malfunctions, and CEMS only apply if an add-on control system is used.
§ 63.6(f)	Yes.	
§ 63.6(g)	Yes.	
§ 63.6(h)	No	Subpart SSSS does not require continuous opacity monitoring systems (COMS).
§ 63.6(i)(1)–(14)	Yes.	
§ 63.6(i)(15)	No	Reserved.
§ 63.6(i)(16)	Yes.	

General provisions reference	Applicable to subpart SSSS	Explanation
§ 63.6(j)	Yes.	
§ 63.7	Yes	With the exception of § 63.7(a)(2)(vii) and (viii), which are reserved.
§ 63.8(a)(1)–(2)	Yes.	
§ 63.8(a)(3)	No	Reserved.
§ 63.8(a)(4)	Yes.	
§ 63.8(b)	Yes.	
§ 63.8(c)(1)–(3)	Yes	Provisions only apply if an add-on control system is used.
§ 63.8(c)(4)	No.	
§ 63.8(c)(5)	No	Subpart SSSS does not require COMS.
§ 63.8(c)(6)	Yes	Provisions only apply if CEMS are used.
§ 63.8(c)(7)–(8)	Yes.	
§ 63.8(d)–(e)	Yes	Provisions only apply if CEMS are used.
§ 63.8(f)(1)–(5)	Yes.	
§ 63.8(f)(6)	No	Section 63.8(f)(6) provisions are not applicable because subpart SSSS does not require CEMS.
§ 63.8(g)(1)–(4)	Yes.	
§ 63.8(g)(5)	No.	
§ 63.9(a)	Yes.	
§ 63.9(b)(1)	Yes.	
§ 63.9(b)(2)	Yes	With the exception that § 63.5180(b)(1) provides 2 years after the proposal date for submittal of the initial notification.
§ 63.9(b)(3)–(5)	Yes.	
§ 63.9(c)–(e)	Yes.	
§ 63.9(f)	No	Subpart SSSS does not require opacity and visible emissions observations.
§ 63.9(g)	No	Provisions for COMS are not applicable.
§ 63.9(h)(1)–(3)	Yes.	
§ 63.9(h)(4)	No	Reserved.
§ 63.9(h)(5)–(6)	Yes.	
§ 63.9(i)	Yes.	
§ 63.9(j)	Yes.	
§ 63.10(a)	Yes.	
§ 63.10(b)(1)–(3)	Yes	Provisions pertaining to startups, shutdowns, malfunctions, and maintenance of air pollution control equipment and to CEMS do not apply unless an add-on control system is used. Also, paragraphs (b)(2)(vi), (x), (xi), and (xiii) do not apply.
§ 63.10(c)(1)	No.	
§ 63.10(c)(2)–(4)	No	Reserved.
§ 63.10(c)(5)–(8)	No.	
§ 63.10(c)(9)	No	Reserved.
§ 63.10(c)(10)–(15)	No.	
§ 63.10(d)(1)–(2)	Yes.	
§ 63.10(d)(3)	No	Subpart SSSS does not require opacity and visible emissions observations.
§ 63.10(d)(4)–(5)	Yes.	
§ 63.10(e)	No.	
§ 63.10(f)	Yes.	
§ 63.11	Yes.	
§ 63.12	Yes.	
§ 63.13	Yes.	
§ 63.14	Yes	Subpart SSSS includes provisions for alternative ASTM and ASME test methods that are incorporated by reference.
§ 63.15	Yes.	

Subpart TTTT—National Emission Standards for Hazardous Air Pollutants for Leather Finishing Operations

SOURCE: 67 FR 9162, Feb. 27, 2002, unless otherwise noted.

WHAT THIS SUBPART COVERS

§ 63.5280 What is the purpose of this subpart?

This subpart establishes national emission standards for hazardous air pollutants (NESHAP) for leather finishing operations. These standards limit HAP emissions from specified

leather finishing operations. This subpart also establishes requirements to demonstrate initial and continuous compliance with the emission standards.

§ 63.5285 Am I subject to this subpart?

(a) You are subject to this subpart if you own or operate a leather finishing operation that is a major source of hazardous air pollutants (HAP) emissions or that is located at, or is part of, a major source of HAP emissions. A leather finishing operation is defined in § 63.5460. In general, a leather finishing operation is a single process or group of processes used to adjust and improve the physical and aesthetic characteristics of the leather surface through multistage application of a coating comprised of dyes, pigments, film-forming materials, and performance modifiers dissolved or suspended in liquid carriers.

(b) You are a major source of HAP emissions if you own or operate a plant site that emits or has the potential to emit any single HAP at a rate of 10 tons (9.07 megagrams) or more per year or any combination of HAP at a rate of 25 tons (22.68 megagrams) or more per year.

(c) You are not subject to this subpart if your source finishes leather solely for the purpose of research and development.

§ 63.5290 What parts of my facility does this subpart cover?

(a) This subpart applies to each new, reconstructed, or existing affected source at leather finishing operations.

(b) The affected source subject to this subpart is the collection of all equipment and activities used for the multistage application of finishing materials to adjust and improve the physical and aesthetic characteristics of the leather surface. This subpart applies to the leather finishing operations listed in paragraphs (b)(1) through (4) of this section and as defined in § 63.5460, whether or not the operations are collocated with leather tanning operations:

(1) Upholstery leather with greater than or equal to 4 grams finish add-on per square foot of leather;

(2) Upholstery leather with less than 4 grams finish add-on per square foot of leather;

(3) Water-resistant/specialty leather; and

(4) Nonwater-resistant leather.

(c) An affected source does not include portions of your leather finishing operation that are listed in paragraphs (c)(1) and (2) of this section:

(1) Equipment used solely with leather tanning operations; and

(2) That portion of your leather finishing operation using a solvent degreasing process, such as in the manufacture of leather chamois, that is already subject to the Halogenated Solvent Cleaning NESHAP (40 CFR part 63, subpart T).

(d) An affected source is a new affected source if you commenced construction of the affected source on or after October 2, 2000, and you meet the applicability criteria at the time you commenced construction.

(e) An affected source is reconstructed if you meet the criteria as defined in § 63.2.

(f) An affected source is existing if it is not new or reconstructed.

§ 63.5295 When do I have to comply with this subpart?

(a) If you have a new or reconstructed affected source, you must comply with this subpart according to paragraphs (a)(1) and (2) of this section:

(1) If you startup your affected source before February 27, 2002, then you must comply with the emission standards for new and reconstructed sources in this subpart no later than February 27, 2002.

(2) If you startup your affected source after February 27, 2002, then you must comply with the emission standards for new and reconstructed sources in this subpart upon startup of your affected source.

(b) If you have an existing affected source, you must comply with the emission standards for existing sources no later than February 28, 2005.

(c) If you have an area source that increases its emissions or its potential to emit such that it becomes a major source of HAP and an affected source subject to this subpart, paragraphs (c)(1) and (2) of this section apply.

(1) An area source that meets the criteria of a new affected source, as specified at § 63.5290(d), or a reconstructed affected source, as specified at § 63.5290(e), must be in compliance with this subpart upon becoming a major source.

(2) An area source that meets the criteria of an existing affected source, as specified at § 63.5290(f), must be in compliance with this subpart no later than 3 years after it becomes a major source.

(d) You must meet the notification requirements in § 63.5415 and in subpart A of this part. Some of the notifications must be submitted before you are required to comply with the emission standards in this subpart.

STANDARDS

§ 63.5305 What emission standards must I meet?

The emission standards limit the number of pounds of HAP lost per square foot of leather processed. You must meet each emission limit in Table 1 of this subpart that applies to you.

COMPLIANCE REQUIREMENTS

§ 63.5320 How does my affected major source comply with the HAP emission standards?

(a) All affected sources must be in compliance with the requirements of this subpart at all times, including periods of startup, shutdown, and malfunction.

(b) You must always operate and maintain your affected source, including air pollution control and monitoring equipment, according to the provisions in § 63.6(e)(1)(i).

(c) You must perform all of the items listed in paragraphs (c)(1) through (10) of this section:

(1) Submit the necessary notifications in accordance with § 63.5415.

(2) Develop and implement a plan for demonstrating compliance in accordance with § 63.5325.

(3) Submit the necessary reports in accordance with § 63.5420.

(4) Keep a finish inventory log, as specified at § 63.5335(b), to record monthly the pounds of each type of finish applied for each leather product process operation and the mass fraction of HAP in each applied finish. You may be required to start recordkeeping prior to the compliance dates specified at § 63.5295.

(5) Keep an inventory log, as specified at § 63.5430(f), to record monthly the surface area of leather processed in 1,000's of square feet for each product process operation. You may be required to start recordkeeping prior to the compliance dates specified at § 63.5295.

(6) Determine the actual HAP loss from your affected source in accordance with § 63.5335.

(7) Determine the allowable HAP loss for your affected source in accordance with § 63.5340.

(8) Determine the compliance ratio for your affected source each month as specified at § 63.5330. The compliance ratio compares your actual HAP loss to your allowable HAP loss for the previous 12 months.

(9) Maintain the compliance ratio for your affected source at or below 1.00 in accordance with § 63.5330.

(10) Maintain all the necessary records you have used to demonstrate compliance with this subpart in accordance with § 63.5430.

§ 63.5325 What is a plan for demonstrating compliance and when must I have one in place?

(a) You must develop and implement a written plan for demonstrating compliance that provides the detailed procedures you will follow to monitor and record data necessary for demonstrating compliance with this subpart. Procedures followed for quantifying HAP loss from the source and amount of leather processed vary from source to source because of site-specific factors such as equipment design characteristics and operating conditions. Typical procedures include one or more accurate measurement methods such as weigh scales and volumetric displacement. Because the industry does not have a uniform set of procedures, you must develop and implement your own site-specific plan for demonstrating compliance not later than the compliance date for your source. You must also incorporate the plan for demonstrating compliance by reference in the source's title V permit.

The plan for demonstrating compliance must include the items listed in paragraphs (a)(1) through (7) of this section:

(1) The name and address of the owner or operator.

(2) The physical address of the leather finishing operation.

(3) Provide a detailed description of all methods of measurement your source will use to determine your finish usage, HAP content of each finish, quantity of leather processed, and leather product process operation type.

(4) Specify when each measurement will be made.

(5) Provide examples of each calculation you will use to determine your compliance status. Include examples of how you will convert data measured with one parameter to other terms for use in compliance determination.

(6) Provide example logs of how data will be recorded.

(7) Provide a quality assurance/quality control plan to ensure that the data continue to meet compliance demonstration needs.

(b) You may be required to revise your plan for demonstrating compliance. We may require reasonable revisions if the procedures lack detail, are inconsistent, or do not accurately determine finish usage, HAP content of each finish, quantity of leather processed, or leather product process operation type.

§ 63.5330 How do I determine the compliance ratio?

(a) When your source has processed leather for 12 months, you must determine the compliance ratio for your affected source by the fifteenth of each month for the previous 12 months.

(b) You must determine the compliance ratio using Equation 1 of this section as follows:

$$\text{Compliance Ratio} = \frac{\text{Actual HAP Loss}}{\text{Allowable HAP Loss}} \qquad \text{(Eq. 1)}$$

Where:

Actual HAP Loss = Pounds of actual HAP loss for the previous 12 months, as determined in § 63.5335.

Allowable HAP Loss = Pounds of allowable HAP loss for the previous 12 months, as determined in § 63.5340.

(1) If the value of the compliance ratio is less than or equal to 1.00, your affected source was in compliance with the applicable HAP emission limits of this subpart for the previous month.

(2) If the value of the compliance ratio is greater than 1.00, your affected source was deviating from compliance with the applicable HAP emission limits of this subpart for the previous month.

§ 63.5335 How do I determine the actual HAP loss?

(a) This section describes the information and procedures you must use to determine the actual HAP loss from your leather finishing operation. By the fifteenth of each month, you must determine the actual HAP loss in pounds from your leather finishing operation for the previous month.

(b) Use a finish inventory log to record the pounds of each type of finish applied for each leather product process operation and the mass fraction of HAP in each applied finish. Figure 1 of this subpart shows an example log for recording the minimum information necessary to determine your finish usage and HAP loss. The finish inventory log must contain, at a minimum, the information for each type of finish applied listed in paragraphs (b)(1) through (7) of this section:

(1) Finish type.

(2) Pounds (or density and volume) of each finish applied to the leather.

(3) Mass fraction of HAP in each applied finish.

(4) Date of the recorded entry.

(5) Time of the recorded entry.

(6) Name of the person recording the entry.

(7) Product process operation type.

(c) To determine the pounds of HAP loss for the previous month, you must first determine the pounds of HAP loss from each finish application according to paragraph (c)(1) or (2) of this section.

(1) For facilities not using add-on emission control devices, the entire HAP content of the finishes are assumed to be released to the environment. Using the finish inventory log, multiply the pounds of each recorded finish usage by the corresponding mass fraction of HAP in the finish. The result is the HAP loss in pounds from each finish application. Sum the pounds of HAP loss from all finish applications recorded during the previous month to determine the total monthly HAP loss in pounds from your finishing operation.

(2) For facilities using add-on emission control devices, the finish inventory log and the emission reduction efficiency of the add-on capture and control devices can be used to determine the net HAP loss in pounds. The emission reduction efficiency for a control device must be determined from a performance test conducted in accordance with §§63.5375 and 63.5380. Using the finish inventory log, multiply the pounds of each recorded finish usage by the corresponding mass fraction of HAP in the finish. The result is the gross HAP loss in pounds from each finish application prior to the add-on control device. Multiply the gross HAP loss by the percent emission reduction achieved by the add-on control device and then subtract this amount from the gross HAP loss. The result is the net HAP loss in pounds from each finish application. Sum the pounds of net HAP loss from all finish applications recorded during the previous month to determine the total monthly net HAP loss in pounds from your finishing operation.

(d) After collecting HAP loss data for 12 months, you must also determine by the fifteenth of each month the annual HAP loss in pounds by summing the monthly HAP losses for the previous 12 months. The annual HAP loss is the ''actual HAP loss,'' which is used in Equation 1 of §63.5330 to calculate your compliance ratio, as described in §63.5330.

§63.5340 How do I determine the allowable HAP loss?

(a) By the fifteenth of each month, you must determine the allowable HAP loss in pounds from your leather finishing operation for the previous month.

(b) To determine the allowable HAP loss for your leather finishing operation, you must select the appropriate HAP emission limit, expressed in pounds of HAP loss per 1,000 square feet of leather processed, from Table 1 of this subpart, for each type of leather product process operation performed during the previous 12 months. Under the appropriate existing or new source column, select the HAP emission limit that corresponds to each type of product process operation performed during the previous 12 months. Next, determine the annual total of leather processed in 1,000's of square feet for each product process operation in accordance with §63.5400. Then, multiply the annual total of leather processed in each product process operation by the corresponding HAP emission limit to determine the allowable HAP loss in pounds for the corresponding leather product process operation. Finally, sum the pounds of HAP loss from all leather product process operations performed in the previous 12 months. Equation 1 of this section illustrates the calculation of allowable HAP loss as follows:

$$\text{Allowable HAP Loss} = \sum_{i=1}^{n} \left(\begin{array}{c} \text{Annual Total} \\ \text{of Leather} \\ \text{Processed}_i \end{array} * \begin{array}{c} \text{HAP} \\ \text{Emission} \\ \text{Limit}_i \end{array} \right) \qquad \text{(Eq. 1)}$$

Where:

Annual Total of Leather Processed = 1,000's of square feet of leather

processed in the previous 12 months in product process operation ''i''.

HAP Emission Limit = From Table 1 of this subpart, the HAP emission limit in pounds of HAP loss per 1,000 square feet of leather processed for product process operation ''i''.

n = Number of leather product process operation types performed during the previous 12 months.

(c) The resulting ''allowable HAP loss'' is used in Equation 1 of § 63.5330 to calculate your compliance ratio, as described in § 63.5330.

§ 63.5345 How do I distinguish between the two upholstery product process operations?

(a) Product process operations that finish leather for use in automobile and furniture seat coverings are categorized as an upholstery product process operation. There are two upholstery product process operations subject to the requirements of this subpart—operations with less than 4 grams of finish add-on per square foot, and operations with 4 grams or more of finish add-on per square foot. You must distinguish between the two upholstery product process operations so that you can determine which HAP emission limit in Table 1 of this subpart applies to your affected source.

(b) You must determine finish add-on by calculating the difference in mass before and after the finishing process. You may use an empirical method to determine the amount of finish add-on applied during the finishing process, as described in paragraphs (b)(1) through (4) of this section:

(1) Weigh a one square foot representative section of polyester film, paper, cardstock, or equivalent material substrate to be finished. This will provide an initial mass and surface area prior to starting the finishing process.

(2) Use a scale with an accuracy of at least 5 percent of the mass in grams of the representative section of substrate.

(3) Upon completion of these measurements, process the representative section of substrate on the finishing line as you would for a typical section of leather.

(4) After the finishing and drying process, weigh the representative section of substrate to determine the final mass. Divide the net mass in grams gained on the representative section by its surface area in square feet to determine grams per square foot of finish add-on. Equation 1 of this section illustrates this calculation, as follows:

$$\text{Finish Add-On} = \frac{\left(\text{Final Mass} - \text{Initial Mass}\right)}{\left(\text{Surface Area}\right)} \qquad \text{(Eq. 1)}$$

Where:

Finish Add-On = Grams per square foot of finish add-on applied to a representative section of polyester film or equivalent material substrate.

Final Mass = Final mass in grams of representative section of polyester film or equivalent material substrate, after finishing and drying.

Initial Mass = Initial mass in grams of representative section of polyester film or equivalent material substrate, prior to finishing.

Surface Area = Surface area in square feet of a representative section of polyester film or equivalent material substrate.

(c) Any appropriate engineering units may be used for determining the finish add-on. However, finish add-on results must be converted to the units of grams of finish add-on per square foot of leather processed. If multiple representative leather sections are analyzed, then use the average of these measurements for selecting the appropriate product process operation.

§ 63.5350 How do I distinguish between the water-resistant/specialty and nonwater-resistant leather product process operations?

(a) Product process operations that finish leather for nonupholstery use are categorized as either water-resistant/specialty or nonwater-resistant product process operations. You must distinguish between the water-resistant/specialty and nonwater-resistant product process operations so that you can determine which HAP emission limit in Table 1 of this subpart applies to your affected source. Water-resistant and nonwater-resistant product process operations for nonupholstery use can be distinguished using the methods described in paragraph (b) of this section. Specialty leather product process operations for nonupholstery use can be distinguished using the criteria described in paragraph (c) of this section.

(b) To determine whether your product process operation produces water-resistant or nonwater-resistant leather, you must conduct the Maeser Flexes test method according to American Society for Testing and Materials (ASTM) Designation D2099–00 (incorporated by reference-see § 63.14) or a method approved by the Administrator.

(1) Statistical analysis of initial water penetration data performed to support ASTM Designation D2099–00 indicates that poor quantitative precision is associated with this testing method. Therefore, at a minimum, 36 leather substrate samples (*i.e.*, three sections of leather substrate from at least 12 sides of leather), must be tested to determine the water-resistant characteristics of the leather. You must average the results of these tests to determine the final number of Maeser Flexes prior to initial water penetration.

(2) Results from leather samples indicating an average of 5,000 Maeser Flexes or more is considered a water-resistant product process operation, and results indicating less than 5,000 Maeser Flexes is considered a nonwater-resistant product process operation. However, leather samples resulting in less than 5,000 Maeser Flexes may be categorized as specialty leather in paragraph (c) of this section.

(c) To determine whether your product process operation produces specialty leather, you must meet the criteria in paragraphs (c)(1) and (2) of this section:

(1) The leather must be a select grade of chrome tanned, bark retanned, or fat liquored leather.

(2) The leather must be retanned through the application of greases, waxes, and oils in quantities greater than 25 percent of the dry leather weight. Specialty leather is also finished with higher solvent-based finishes that provide rich color, luster, or an oily/tacky feel. Specialty leather products may include, but not limited to, specialty shoe leather and top grade football leathers.

§ 63.5355 How do I monitor and collect data to demonstrate continuous compliance?

(a) You must monitor and collect data according to this section.

(b) You must collect data at all required intervals as specified in your plan for demonstrating compliance as specified at § 63.5325.

(c) For emission control devices, except for monitor malfunctions, associated repairs, and required quality assurance or control activities (including, as applicable, calibration checks and required zero and span adjustments), you must monitor continuously (or collect data at all required intervals) at all times that the affected source is operating.

(d) You may not use data recorded during monitoring malfunctions, associated repairs, and required quality assurance or control activities in data averages and calculations used to report emission or operating levels, nor may such data be used in fulfilling a minimum data availability requirement, if applicable. You must use all the data collected during all other periods in assessing the compliance ratio, and, if an emission control device is used, in assessing the operation of the control device.

§ 63.5360 How do I demonstrate continuous compliance with the emission standards?

(a) You must demonstrate continuous compliance with the emission standards in § 63.5305 by following the requirements in paragraphs (a)(1) and (2) of this section:

(1) You must collect and monitor data according to the procedures in your plan for demonstrating compliance as specified in § 63.5325.

(2) If you use an emission control device, you must collect the monitoring data according to 40 CFR part 63, subpart SS.

(3) You must maintain your compliance ratio less than or equal to 1.00, as specified at § 63.5330.

(b) You must report each instance in which you did not meet the emission standards in § 63.5305. This includes periods of startup, shutdown, and malfunction. These deviations must be reported according to the requirements in § 63.5420(b).

(c) You must conduct the initial compliance demonstration before the compliance date that is specified for your source in § 63.5295.

TESTING AND INITIAL COMPLIANCE REQUIREMENTS

§ 63.5375 When must I conduct a performance test or initial compliance demonstration?

You must conduct performance tests after the installation of any emission control device that reduces HAP emissions and can be used to comply with the HAP emission requirements of this subpart. You must complete your performance tests not later than 60 calendar days before the end of the 12-month period used in the initial compliance determination.

§ 63.5380 How do I conduct performance tests?

(a) Each performance test must be conducted according to the requirements in § 63.7(e) and the procedures of § 63.997(e)(1) and (2).

(b) You may not conduct performance tests during periods of startup, shutdown, or malfunction, as specified in § 63.7(e)(1).

(c) You must conduct three separate test runs for each performance test required in this section, as specified in § 63.7(e)(3). Each test run must last at least 1 hour.

§ 63.5385 How do I measure the quantity of finish applied to the leather?

(a) To determine the amount of finish applied to the leather, you must measure the mass, or density, and volume of each applied finish.

(b) Determine the mass of each applied finish with a scale calibrated to an accuracy of at least 5 percent of the amount measured. The quantity of all finishes used for finishing operations must be weighed or have a predetermined weight.

(c) Determine the density and volume of each applied finish according to the criteria listed in paragraphs (c)(1) through (3) of this section:

(1) Determine the density of each applied finish in pounds per gallon in accordance with § 63.5395. The finish density will be used to convert applied finish volumes from gallons into mass units of pounds.

(2) Volume measurements of each applied finish can be obtained with a flow measurement device. For each flow measurement device, you must perform the items listed in paragraphs (c)(2)(i) through (v) of this section:

(i) Locate the flow sensor and other necessary equipment such as straightening vanes in or as close to a position that provides a representative flow.

(ii) Use a flow sensor with a minimum tolerance of 2 percent of the flow rate.

(iii) Reduce swirling flow or abnormal velocity distributions due to upstream and downstream disturbances.

(iv) Conduct a flow sensor calibration check at least semiannually.

(v) At least monthly, inspect all components for integrity, all electrical connections for continuity, and all mechanical connections for leakage.

(3) Volume measurements of each applied finish can be obtained with a calibrated volumetric container with an accuracy of at least 5 percent of the amount measured.

§ 63.5390 How do I measure the HAP content of a finish?

(a) To determine the HAP content of a finish, the reference method is EPA Method 311 of appendix A of 40 CFR part 63. You may use EPA Method 311, an alternative method approved by the Administrator, or any other reasonable means for determining the HAP content. Other reasonable means of determining HAP content include, but are not limited to, a material safety data sheet (MSDS) or a manufacturer's hazardous air pollutant data sheet. If the HAP content is provided on a MSDS or a manufacturer's data sheet as a range of values, then the highest HAP value of the range must be used for the determination of compliance to this standard. This value must be entered on the finish log for each type of finish applied. You are not required to test the materials that you use, but the Administrator may require a test using EPA Method 311 (or another approved method) to confirm the reported HAP content. However, if the results of an analysis by EPA Method 311 are different from the HAP content determined by another means, the EPA Method 311 results will govern compliance determinations.

(b) You may use the weighted average of the HAP content analysis as determined in paragraph (a) of this section for each finish when you perform one of the actions listed in paragraphs (b)(1) and (2) of this section:

(1) Mix your own finishes on site.

(2) Mix new quantities of finish with previous quantities of finish that may have a different HAP content.

§ 63.5395 How do I measure the density of a finish?

(a) To determine the density of a finish, the reference method is EPA Method 24 of appendix A of 40 CFR part 60. You may use EPA Method 24, an alternative method approved by the Administrator, or any other reasonable means for determining the density of a finish. Other reasonable means of determining density include, but are not limited to, an MSDS or a manufacturer's hazardous air pollutant data sheet. If the density is provided on a MSDS or a manufacturer's data sheet as a range of values, then the highest density value of the range must be used for the determination of compliance to this standard. This value must be entered on the finish log for each type of finish applied. You are not required to test the materials that you use, but the Administrator may require a test using EPA Method 24 (or another approved method) to confirm the reported density. However, if the results of an analysis by EPA Method 24 are different from the density determined by another means, the EPA Method 24 results will govern compliance determinations.

(b) You may use the weighted average of finish densities as determined in paragraph (a) of this section for each finish when you perform one of the actions listed in paragraphs (b)(1) and (2) of this section:

(1) Mix your own finishes on site.

(2) Mix new quantities of finish with previous quantities of finish that may have different densities.

(c) Equation 1 of this section may be used to determine the weighted average of finish densities, as follows:

$$\text{Average Weighted Density} = \frac{\sum_{i=1}^{n} \text{Mass}_i * \text{Density}_i}{\sum_{i=1}^{n} \text{Mass}_i} \qquad \text{(Eq. 1)}$$

Where:

Average Weighted Density = The average weighted density of applied finishes in pounds per gallon.

Mass = Pounds of finish ''i'' applied.
Density = The density of finish ''i'' in pounds per gallon.
n = Number of finish types applied.

§ 63.5400 How do I measure the quantity of leather processed?

(a) This section describes the information and procedures you must use to determine the quantity of leather processed at your affected source.

(1) To determine the surface area (i.e., quantity) of leather substrate processed each month at your source for each product process operation, follow the procedures in your plan for demonstrating compliance. You must consistently measure the surface area of processed leather substrate at one of the manufacturing locations listed in paragraph (a)(1)(i) or (ii) of this section:

(i) Measure the surface area of processed leather upon exiting the leather finishing operation.

(ii) Measure the surface area of processed leather upon shipment from the source.

(2) By the fifteenth of each month, you must determine the quantity of leather processed in 1,000's of square feet for each product process operation during the previous month. After collecting data on the amount of leather processed for 12 months, you must also determine by the fifteenth of each month the annual total of leather processed in 1,000's of square feet for each product process operation by summing the monthly quantities of leather processed in each product process operation for the previous 12 months. The ''annual total of leather processed'' in each product process operation is used in Equation 1 of § 63.5340 to calculate your allowable HAP loss as described in § 63.5340. Your allowable HAP loss is then subsequently used to calculate your compliance ratio as described in § 63.5330.

(b) To determine the surface area of leather processed at your source for each product process operation, you must use one of the methods listed in paragraphs (b)(1) and (2) of this section:

(1) Premeasured leather substrate sections being supplied by another manufacturer as an input to your finishing process.

(2) Measure the surface area of each piece of processed or shipped leather with a computer scanning system accurate to 0.1 square feet. The computer scanning system must be initially calibrated for minimum accuracy to the manufacturer's specifications. For similar leather production runs, use an average based on a minimum of 500 pieces of leather in lieu of individual measurements.

(c) Except as provided in paragraph (d) of this section, you must include the surface area of each piece of processed leather only once when determining the monthly quantity of leather processed, regardless of the number of times a piece of leather is reprocessed through a portion of the finishing operations.

(d) If a piece of leather is completely stripped of all applied finishes and reprocessed through the entire finishing operation as if it were a new piece of leather, you may recount the surface area of leather reprocessed when determining the monthly quantity of leather processed.

NOTIFICATIONS, REPORTS, AND RECORDS

§ 63.5415 What notifications must I submit and when?

(a) In accordance with §§ 63.7(b) and (c) and 63.9(b) and (h) of the General Provisions, you must submit the one-time notifications listed in paragraphs (b) through (g) of this section.

(b) As specified in § 63.9(b)(2), if you start up your affected source before February 27, 2002, you must submit an Initial Notification not later than June 27, 2002.

(c) In the Initial Notification, include the items in paragraphs (c)(1) through (4) of this section:

(1) The name and address of the owner or operator.

(2) The physical address of the leather finishing operation.

(3) Identification of the relevant standard, such as the Leather Finishing Operations NESHAP, and compliance date.

(4) A brief description of the source including the types of leather product process operations and nominal operating capacity.

(d) As specified in § 63.9(b)(1) and (2), if you startup your new or reconstructed affected source on or after February 27, 2002, you must submit an Initial Notification not later than 120 calendar days after you become subject to this subpart.

(e) If you are required to conduct a performance test, you must submit a Notification of Intent to Conduct a Performance Test at least 60 calendar days before the performance test is scheduled to begin as required in § 63.7(b)(1).

(f) You must submit a Notification of Compliance Status report not later than 60 calendar days after determining your initial 12-month compliance ratio. The notification of compliance status must contain the items in paragraphs (f)(1) through (5) of this section:

(1) The name and address of the owner or operator.

(2) The physical address of the leather finishing operation.

(3) Each type of leather product process operation performed during the previous 12 months.

(4) Each HAP identified under § 63.5390 in finishes applied during the 12-month period used for the initial compliance determination.

(5) A compliance status certification indicating whether the source complied with all of the requirements of this subpart throughout the 12-month period used for the initial source compliance determination. This certification must include the items in paragraphs (f)(5)(i) through (iii) of this section:

(i) The plan for demonstrating compliance, as described in § 63.5325, is complete and available on site for inspection.

(ii) You are following the procedures described in the plan for demonstrating compliance.

(iii) The compliance ratio value was determined to be less than or equal to 1.00, or the value was determined to be greater than 1.00.

(g) If your source becomes a major source on or after February 27, 2002, you must submit an initial notification not later than 120 days after you become subject to this subpart.

§ 63.5420 What reports must I submit and when?

(a) You must submit the first annual compliance status certification 12 months after you submit the Notification of Compliance Status. Each subsequent annual compliance status certification is due 12 months after the previous annual compliance status certification. The annual compliance status certification provides the compliance status for each month during the 12-month period ending 60 days prior to the date on which the report is due. Include the information in paragraphs (a)(1) through (5) of this section in the annual certification:

(1) The name and address of the owner or operator.

(2) The physical address of the leather finishing operation.

(3) Each type of leather product process operation performed during the 12-month period covered by the report.

(4) Each HAP identified under § 63.5390, in finishes applied during the 12-month period covered by the report.

(5) A compliance status certification indicating whether the source complied with all of the requirements of this subpart throughout the 12-month period covered by the report. This certification must include the items in paragraphs (a)(5)(i) and (ii) of this section:

(i) You are following the procedures described in the plan for demonstrating compliance.

(ii) The compliance ratio value was determined to be less than or equal to 1.00, or the value was determined to be greater than 1.00.

(b) You must submit a Deviation Notification Report for each compliance determination you make in which the compliance ratio exceeds 1.00, as determined under § 63.5330. Submit the deviation report by the fifteenth of the following month in which you determined the deviation from the compliance ratio. The Deviation Notification Report must include the items in paragraphs (b)(1) through (4) of this section:

(1) The name and address of the owner or operator.

(2) The physical address of the leather finishing operation.

(3) Each type of leather product process operation performed during the 12-month period covered by the report.

(4) The compliance ratio comprising the deviation. You may reduce the frequency of submittal of the Deviation Notification Report if the responsible agency of these NESHAP does not object.

§ 63.5425 When must I start recordkeeping to determine my compliance ratio?

(a) If you have a new or reconstructed affected source, you must start recordkeeping to determine your compliance ratio according to one of the schedules listed in paragraphs (a)(1) and (2) of this section:

(1) If the startup of your new or reconstructed affected source is before February 27, 2002, then you must start recordkeeping to determine your compliance ratio no later than February 27, 2002.

(2) If the startup of your new or reconstructed affected source is after February 27, 2002, then you must start recordkeeping to determine your compliance ratio upon startup of your affected source.

(b) If you have an existing affected source, you must start recordkeeping to determine your compliance ratio no later than February 27, 2004.

(c) If you have a source that becomes a major source of HAP emissions after February 27, 2002, then you must start recordkeeping to determine your compliance ratio immediately upon submitting your Initial Notification, as required at § 63.5415(g).

§ 63.5430 What records must I keep?

You must satisfy the recordkeeping requirements in paragraphs (a) through (g) of this section by the compliance date specified in § 63.5295.

(a) You must keep the plan for demonstrating compliance as required at § 63.5325 onsite and readily available as long as the source is operational. If you make any changes to the plan for demonstrating compliance, then you must keep all previous versions of the plan and make them readily available for inspection for at least 5 years after each revision.

(b) You must keep a copy of each notification and report that you are required to submit in accordance with this subpart.

(c) You must keep records of performance tests in accordance with this subpart.

(d) You must record and maintain a continuous log of finish usage as specified at § 63.5335(b).

(e) You must maintain all necessary records to document the methods you used and the results of all HAP content measurements of each applied finish.

(f) For each leather product process operation, you must maintain a monthly log of the items listed in paragraphs (f)(1) and (2) of this section:

(1) Dates for each leather product process operation.

(2) Total surface area of leather processed for each leather product process operation.

(g) If you use an emission control device, you must keep records of monitoring data as specified at subpart SS of this part.

§ 63.5435 In what form and how long must I keep my records?

(a) Your records must be in a form suitable and readily available for expeditious review according to § 63.10(b)(1).

(b) As specified in § 63.10(b)(1), you must keep each record for 5 years following the date of each occurrence, measurement, maintenance, corrective action, report, or record.

(c) You must keep each record onsite for at least 2 years after the date of each occurrence, measurement, maintenance, corrective action, report, or record according to § 63.10(b)(1). You can keep the records offsite for the remaining 3 years.

OTHER REQUIREMENTS AND INFORMATION

§ 63.5450 What parts of the General Provisions apply to me?

Table 2 of this subpart shows which parts of the General Provisions in §§ 63.1 through 63.15 apply to you.

§ 63.5455 Who administers this subpart?

(a) This subpart can be administered by us, the United States Environmental Protection Agency (U.S. EPA), or a delegated authority such as your State, local, or tribal agency. If the U.S. EPA Administrator has delegated authority to your State, local, or tribal

agency, then that agency has the primary authority to administer and enforce this subpart. You should contact your U.S. EPA Regional Office to find out if the authority to implement and enforce this subpart is delegated to your State, local, or tribal agency.

(b) In delegating implementation and enforcement authority of this subpart to a State, local, or tribal agency under subpart E of this part, the authorities contained in paragraph (c) of this section are retained by the Administrator of U.S. EPA and are not transferred to the State, local, or tribal agency.

(c) The authorities that will not be delegated to State, local, or tribal agencies are listed in paragraphs (c)(1) through (4) of this section:

(1) Approval of alternatives to the emission standards in § 63.5305 under § 63.6(g).

(2) Approval of major alternatives to test methods under § 63.7(e)(2)(ii) and (f) and as defined in § 63.90.

(3) Approval of major alternatives to monitoring under § 63.8(f) and as defined in § 63.90.

(4) Approval of major alternatives to recordkeeping and reporting under § 63.10(f) and as defined in § 63.90.

§ 63.5460 What definitions apply to this subpart?

Terms used in this subpart are defined in the Clean Air Act, § 63.2, and in this section as follows:

Area source means any stationary source of hazardous air pollutants that is not a major source as defined in this part.

Compliance ratio means the ratio of the actual HAP loss from the previous 12 months to the allowable HAP loss from the previous 12 months. Equation 1 in § 63.5330 is used to calculate this value. If the value is less than or equal to 1.00, the source is in compliance. If the value is greater than 1.00, the source is deviating from compliance.

Deviation means any instance in which an affected source subject to this subpart, or an owner or operator of such a source:

(1) Fails to meet any requirement or obligation established by this subpart, including but not limited to any emission limits or work practice standards.

(2) Fails to meet any emission limits, operating limits, or work practice standards in this subpart during start-up, shutdown, or malfunction, regardless of whether or not such failure is permitted by this subpart.

Drying means the process of removing all but equilibrium moisture from the leather. Drying methods currently in use include: toggling, hanging, pasting, and vacuum drying.

Finish add-on means the amount of solid material deposited on the leather substrate due to finishing operations. Typically, the solid deposition is a dye or other chemical used to enhance the color and performance of the leather. Finish add-on is quantified as mass per surface area of substrate, such as grams of finish add-on per square foot of leather substrate.

Hazardous air pollutants (HAP) means any substance or mixture of substances listed as a hazardous air pollutant under section 112(b) of the Clean Air Act.

Leather means the pelt or hide of an animal which has been transformed by a tanning process into a nonputrescible and useful material.

Leather finishing means a single process or group of processes used to adjust and improve the physical and aesthetic characteristics of the leather surface through the multistage application of a coating comprised of dyes, pigments, film-forming materials, and performance modifiers dissolved or suspended in liquid carriers.

Leather substrate means a nonputrescible leather surface intended for the application of finishing chemicals and materials. The leather substrate may be a continuous piece of material such as side leather or may be a combination of smaller leather pieces and leather fibers, which when joined together, form a integral composite leather material.

Leather tanning means the processes, commonly referred to as wet operations, used to purify and stabilize the collagen content of the hide. Wet operations are divided into three phases, the beamhouse (includes soaking and

unhairing); the tanyard (includes bating, pickling, tanning, trimming/siding, and splitting); and the coloring department (includes retanning, coloring, and atliquoring operations).

Month means that all references to a month in this subpart refer to a calendar month.

Nonwater-resistant leather means nonupholstery leather that is not treated with any type of waterproof finish and, thus, cannot withstand 5,000 Maeser Flexes with a Maeser Flex Testing Machine or a method approved by the Administrator prior to initial water penetration. This leather is typically used for dress shoes, handbags, and garments.

Product process operation means any one of the four leather production classifications developed for ease of compliance with this subpart. The four leather product process operations are as follows: upholstery leather with greater than or equal to 4 grams finish add-on per square foot, upholstery leather with less than 4 grams finish add-on per square foot, water-resistant/specialty leather, and nonwater-resistant leather.

Specialty leather means a select grade of chrome tanned, bark retanned, or fat liquored leather that is retanned through the application of greases, waxes, and oils in quantities greater than 25 percent of the dry leather weight. Specialty leather is also finished with higher solvent-based finishes that provide rich color, luster, or an oily/tacky feel. Specialty leather products are generally low volume, high-quality leather, such as specialty shoe leather and top grade football leathers.

Upholstery leather (greater than or equal to 4 grams finish add-on per square foot) means an upholstery leather with a final finish add-on to leather ratio of 4 or more grams of finish per square foot of leather. These types of finishes are used primarily for automobile seating covers. These finishes tend to be aqueous-based.

Upholstery leather (less than 4 grams finish add-on per square foot) means an upholstery leather with a final finish add-on to leather ratio of less than 4 grams of finish per square foot of leather. These types of finishes are typically used for furniture seating covers. The finishes tend to be solvent-based and leave a thinner, softer, and more natural leather texture.

Water-resistant leather means nonupholstery leather that has been treated with one or more waterproof finishes such that the leather can withstand 5,000 or more Maeser Flexes with a Maeser Flex Testing Machine or a method approved by the Administrator prior to initial water penetration. This leather is used for outerwear, boots and outdoor applications.

FIGURE 1 TO SUBPART TTTT OF PART 63—EXAMPLE LOGS FOR RECORDING LEATHER FINISH USE AND HAP CONTENT

Month:_____
Year:_____

FINISH INVENTORY LOG

Finish type	Finish usage (pounds)	HAP Content (mass fraction)	Date and time	Operator's name	Product process operation

MONTHLY SUMMARY OF FINISH USAGE

	Upholstery leather (≥4 grams)	Upholstery leather (<4 grams)	Water-resistant/specialty leather	Nonwater-resistant leather
Number of Entries.				
Total Finish Usage (pounds).				

MONTHLY SUMMARY OF FINISH USAGE—Continued

	Upholstery leather (≥4 grams)	Upholstery leather (<4 grams)	Water-resistant/specialty leather	Nonwater-resistant leather
Total HAP Usage (pounds).				

TABLES TO SUBPART TTTT OF PART 63

As required in §§ 63.5305 and 63.5340(b), you must meet the appropriate emission limits in the following table:

TABLE 1 TO SUBPART TTTT OF PART 63—LEATHER FINISHING HAP EMISSION LIMITS FOR DETERMINING THE ALLOWABLE HAP LOSS

Type of Leather Product Process Operation	HAP Emission Limit (pounds of HAP loss per 1,000 square feet of leather processed)	
	Existing sources	New sources
1. Upholstery Leather (≥4 grams add-on/square feet)	2.6	0.5
2. Upholstery Leather (<4 grams add-on/square feet)	6.8	2.5
3. Water-resistant (≥5,000 Maeser Flexes)/Specialty Leather	5.6	4.9
4. Nonwater-resistant Leather (<5,000 Maeser Flexes)	3.7	2.1

As required in § 63.5450, you must meet the appropriate NESHAP General Provision requirements in the following table:

TABLE 2 TO SUBPART TTTT OF PART 63—LEATHER FINISHING HAP EMISSION LIMITS FOR DETERMINING THE ALLOWABLE HAP LOSS

General provisions citation	Subject of citation	Brief description of requirement	Applies to subpart	Explanation
§ 63.1	Applicability	Initial applicability determination; applicability after standard established; permit requirements; extensions, notifications.	Yes	
§ 63.2	Definitions	Definitions for Part 63 standards	Yes	Except as specifically provided in this subpart.
§ 63.3	Units and abbreviations	Units and abbreviations for Part 63 standards.	Yes	
§ 63.4	Prohibited activities and circumvention.	Prohibited activities; compliance date; circumvention, severability.	Yes	
§ 63.5	Construction/reconstruction	Applicability; applications; approvals	Yes	Except for paragraphs of § 63.5 as listed below.
§ 63.5(c)	[Reserved]			
§ 63.5(d)(1)(ii)(H)	Application for approval	Type and quantity of HAP, operating parameters.	No	All sources emit HAP. Subpart TTTT does not require control from specific emission points.
§ 63.5(d)(1)(i)	[Reserved]			
§ 63.5(d)(1)(iii), (d)(2), (d)(3)(ii)		Application for approval	No	The requirements of the application for approval for new and reconstructed sources are described in § 63.5320(b). General provision requirements for identification of HAP emission points or estimates of actual emissions are not required. Descriptions of control and methods, and the estimated and actual control efficiency of such do not apply. Requirements for describing control equipment and the estimated and actual control efficiency of such equipment apply only to control equipment to which the subpart TTTT requirements for quantifying solvent destroyed by an add-on control device would be applicable.
§ 63.6	Applicability of general provisions	Applicability of general provisions	Yes	Except for paragraphs of § 63.6 as listed below.
§ 63.6(b)(1)–(3)	Compliance dates, new and reconstructed sources.		No	Section § 63.5283 specifies the compliance dates for new and reconstructed sources.
§ 63.6(b)(6)	[Reserved]			
§ 63.6(c)(3)–(4)	[Reserved]			
§ 63.6(d)	[Reserved]			
§ 63.6(e)	Operation and maintenance requirements.		Yes	Except for subordinate paragraphs of § 63.6(e) as listed below.

§ 63.6(e)(3)	Operation and maintenance requirements.	Startup, shutdown, and malfunction plan requirements.	No	Subpart TTTT does not have any startup, shutdown, and malfunction plan requirements.
§ 63.6(f)–(g)	Compliance with nonopacity emission standards except during SSM.	Comply with emission standards at all times except during SSM.	No	Subpart TTTT does not have nonopacity requirements.
§ 63.6(h)	Opacity/visible emission (VE) standards.		No	Subpart TTTT has no opacity or visual emission standards.
§ 63.6(i)	Compliance extension	Procedures and criteria for responsible agency to grant compliance extension.	Yes	
§ 63.6(j)	Presidential compliance exemption.	President may exempt source category from requirement to comply with subpart.	Yes	
§ 63.7	Performance testing requirements.	Schedule, conditions, notifications and procedures.	Yes	Except for paragraphs of § 63.7 as listed below. Subpart TTTT requires performance testing only if the source applies additional control that destroys solvent. § 63.5311 requires sources to follow the performance testing guidelines of the General Provisions if a control is added.
§ 63.7(a)(2) (i) and (iii)	Performance testing requirements.	Applicability and performance dates	No	§ 63.5310(a) of subpart TTTT specifies the requirements of performance testing dates for new and existing sources.
§ 63.8	Monitoring requirements		No	Subpart TTTT does not require monitoring other than as specified therein.
§ 63.9	Notification requirements	Applicability and State delegation	Yes	Except for paragraphs of § 63.9 as listed below.
§ 63.9(e)	Notification of performance test	Notify responsible agency 60 days ahead	Yes	Applies only if performance testing is performed.
§ 63.9(f)	Notification of VE/opacity observations.	Notify responsible agency 30 days ahead	No	Subpart TTTT has no opacity or visual emission standards.
§ 63.9(g)	Additional notifications when using a continuous monitoring system (CMS).	Notification of performance evaluation; notification using COMS data; notification that exceeded criterion for relative accuracy.	No	Subpart TTTT has no CMS requirements.
§ 63.9(h)	Notification of compliance status	Contents	No	§ 63.5320(d) specifies requirements for the notification of compliance status.
§ 63.10	Recordkeeping/reporting	Schedule for reporting, record storage	Yes	Except for paragraphs of § 63.10 as listed below.
§ 63.10(b)(2)	Recordkeeping	Record startup, shutdown, and malfunction events.	No	Subpart TTTT has no recordkeeping requirements for startup, shutdown, and malfunction events.
§ 63.10(c)	Recordkeeping	Additional CMS recordkeeping	No	Subpart TTTT does not require CMS.
§ 63.10(d)(2)	Reporting	Reporting performance test results	Yes	Applies only if performance testing is performed.
§ 63.10(d)(3)	Reporting	Reporting opacity or VE observations	No	Subpart TTTT has no opacity or visible emission standards.
§ 63.10(d)(4)	Reporting	Progress reports	Yes	Applies if a condition of compliance extension.
§ 63.10(d)(5)	Reporting	Startup, shutdown, and malfunction reporting.	No	Subpart TTTT has no startup, shutdown, and malfunction reporting requirements.
§ 63.10(e)	Reporting	Additional CMS reports	No	Subpart TTTT does not require CMS.

General provisions citation	Subject of citation	Brief description of requirement	Applies to subpart	Explanation
§ 63.11	Control device requirements	Requirements for flares	Yes	Applies only if your source uses a flare to control solvent emissions. Subpart TTTT does not require flares.
§ 63.12	State authority and delegations	State authority to enforce standards	Yes	
§ 63.13	State/regional addresses	Addresses where reports, notifications, and requests are sent.	Yes	
§ 63.14	Incorporation by reference	Test methods incorporated by reference	Yes	
§ 63.15	Availability of information and confidentiality.	Public and confidential information	Yes	

Subpart UUUU—National Emission Standards for Hazardous Air Pollutants for Cellulose Products Manufacturing

SOURCE: 67 FR 40055, June 11, 2002, unless otherwise noted.

WHAT THIS SUBPART COVERS

§ 63.5480 What is the purpose of this subpart?

This subpart establishes emission limits, operating limits, and work practice standards for hazardous air pollutants (HAP) emitted from cellulose products manufacturing operations. Carbon disulfide, carbonyl sulfide, ethylene oxide, methanol, methyl chloride, propylene oxide, and toluene are the HAP emitted in the greatest quantities from cellulose products manufacturing operations. This subpart also establishes requirements to demonstrate initial and continuous compliance with the emission limits, operating limits, and work practice standards.

§ 63.5485 Am I subject to this subpart?

You are subject to this subpart if you own or operate a cellulose products manufacturing operation that is located at a major source of HAP emissions.

(a) Cellulose products manufacturing includes both the Miscellaneous Viscose Processes source category and the Cellulose Ethers Production source category. The Miscellaneous Viscose Processes source category includes all of the operations that use the viscose process. These operations include the cellulose food casing, rayon, cellulosic sponge, and cellophane operations, as defined in § 63.5610. The Cellulose Ethers Production source category includes all of the cellulose ether operations, as defined in § 63.5610, that use the cellulose ether process.

(b) A major source of HAP is any stationary source or group of stationary sources located within a contiguous area and under common control that emits or has the potential to emit any single HAP at a rate of 9.1 megagrams per year (Mg/yr) (10 tons per year (tpy)) or more or any combination of HAP at a rate of 23 Mg/yr (25 tpy) or more.

(c) The provisions of this subpart do not apply to research and development facilities, as defined in section 112(b)(7) of the Clean Air Act (CAA), regardless of whether the facilities are located at the same plant site as an operation subject to the provisions of this subpart.

(d) For cellulose ether operations, the applicability provisions in paragraph (d)(1) or (2) of this section apply.

(1) The applicability provisions in §§ 63.100(a) through (f) and 63.160 apply if you are complying with the equipment leak provisions of subpart H of this part.

(2) The applicability provisions in § 63.1019 apply if you are complying with the equipment leak provisions in subpart UU of this part.

(e) For cellulose ether operations, the applicability provisions in §§ 63.100(a) through (f) and 63.110(a), (e) and (h) apply if you are complying with the wastewater provisions in subparts F and G of this part.

§ 63.5490 What parts of my plant does this subpart cover?

(a) This subpart applies to each new, reconstructed, or existing affected source for the Miscellaneous Viscose Processes and Cellulose Ethers Production source categories.

(b) The affected source for the Miscellaneous Viscose Processes source category is each cellulose food casing, rayon, cellulosic sponge, or cellophane operation, as defined in § 63.5610. The affected source for the Cellulose Ethers Production source category is each cellulose ether operation, as defined in § 63.5610.

(c) You must consider storage vessels to be part of your process unit, as defined in § 63.5610, under either of the conditions described in paragraphs (c)(1) and (2) of this section. Otherwise, you may assign your storage vessels according to paragraph (c)(3) or (4) of this section.

(1) The input to the storage vessel from your viscose process or cellulose ether process (either directly or through other storage vessels assigned to your process unit) is greater than or equal to the input from any other process.

(2) The output from the storage vessel to your viscose process or cellulose ether process (either directly or through other storage vessels assigned to your process unit) is greater than or equal to the output to any other process.

(3) If the greatest input to and/or output from a shared storage vessel is the same for two or more processes, including at least one viscose process or cellulose ether process, you may assign the storage vessel to any process unit that has the greatest input or output.

(4) If the use varies from year to year, then you must base the determination on the utilization that occurred during the year preceding June 11, 2002 or, if the storage vessel was not operating during that year, you must base the use on the expected use for the first 5-year period after startup. You must include this determination in the Notification of Compliance Status Report specified in Table 7 to this subpart.

(d) An affected source is a new affected source if you began construction of the affected source after August 28, 2000 and you meet the applicability criteria in § 63.5485 at the time you began construction.

(e) An affected source is reconstructed if you meet the criteria as defined in § 63.2.

(f) An affected source is existing if it is not new or reconstructed.

(g) For the purposes of this subpart, the definitions of new and existing affected source in paragraphs (d) through (f) of this section supersede the definitions of new and existing affected source in subparts F, G, H, U and UU of this part.

§ 63.5495 When do I have to comply with this subpart?

(a) If you have a new or reconstructed affected source, then you must comply with this subpart according to the requirements in paragraphs (a)(1) and (2) of this section.

(1) If you start up your affected source before June 11, 2002, then you must comply with the emission limits, operating limits, and work practice standards for new and reconstructed sources in this subpart no later than June 11, 2002.

(2) If you start up your affected source after June 11, 2002, then you must comply with the emission limits, operating limits, and work practice standards for new and reconstructed sources in this subpart upon startup of your affected source.

(b) If you have an existing affected source, then you must comply with this subpart according to the requirements in paragraphs (b)(1) and (2) of this section.

(1) Cellulose food casing, cellulosic sponge, cellophane, and cellulose ether operations must comply with the emission limits, operating limits, and work practice standards for existing sources in this subpart no later than June 13, 2005.

(2) Rayon operations must comply with this subpart according to the requirements in paragraphs (b)(2)(i) through (iii) of this section.

(i) Rayon operations must comply with the 35 percent reduction emission limit and associated operating limits and work practice standards for existing sources in this subpart no later than June 13, 2005.

(ii) Rayon operations must comply with the work practice standard for carbon disulfide unloading and storage operations for existing sources in this subpart no later than June 13, 2005.

(iii) Rayon operations must comply with the 40 percent reduction emission limit and associated operating limits and work practice standards for existing sources in this subpart no later than June 11, 2010.

(c) If you have an area source that increases its emissions or its potential to emit so that it becomes a major source of HAP and an affected source subject to this subpart, then the requirements in paragraphs (c)(1) and (2) of this section apply.

(1) An area source that meets the criteria of a new affected source, as specified in § 63.5490(d), or a reconstructed affected source, as specified in § 63.5490(e), must be in compliance with this subpart upon becoming a major source.

(2) An area source that meets the criteria of an existing affected source, as specified in § 63.5490(f), must be in compliance with this subpart no later than

3 years after it becomes a major source.

(d) You must meet the notification requirements in §63.5575 and in subpart A of this part. Some of the notifications must be submitted before you are required to comply with the emission limits, operating limits, and work practice standards in this subpart.

(e) For the purposes of this subpart, the compliance dates in this section supersede the compliance dates in subparts F, G, H, U and UU of this part.

EMISSION LIMITS, OPERATING LIMITS, AND WORK PRACTICE STANDARDS

§63.5505 What emission limits, operating limits, and work practice standards must I meet?

(a) You must meet each emission limit and work practice standard in Table 1 to this subpart that applies to you.

(b) You must meet each operating limit in Table 2 to this subpart that applies to you.

(c) As provided in §63.6(g), you may apply to EPA for permission to use an alternative to the work practice standards in this section.

(d) Opening of a safety device, as defined in §63.5610, is allowed at any time that conditions require venting to avoid unsafe conditions.

(e) The emission limits in Table 1 to this subpart used to control emissions from storage vessels do not apply during periods of planned routine maintenance. Periods of planned routine maintenance of each control device, during which the control device does not meet the emission limit specified in Table 1 to this subpart, must not exceed 240 hours per year.

GENERAL COMPLIANCE REQUIREMENTS

§63.5515 What are my general requirements for complying with this subpart?

(a) You must be in compliance with the emission limits, operating limits, and work practice standards in this subpart at all times, except during periods of startup, shutdown, and malfunction.

(b) You must always operate and maintain your affected source, including air pollution control and monitoring equipment, according to the provisions in §63.6(e)(1)(i).

(1) During the period between the compliance date specified for your affected source in §63.5495 and the date upon which continuous monitoring systems (CMS) have been installed and validated and any applicable operating limits have been set, you must maintain a log detailing the operation and maintenance of the process and emissions control equipment.

(c) You must develop and implement a written startup, shutdown, and malfunction (SSM) plan according to the provisions in §63.6(e)(3).

(d) After you treat a wastewater stream according to the provisions of subparts F and G of this part, it is no longer subject to this subpart.

(e) If you use a boiler or process heater to comply with an emission limit or work practice standard in Table 1 to this subpart, then the vent stream must be introduced into the flame zone of the boiler or process heater.

(f) You are not required to conduct a performance test when you use any of the units specified in paragraphs (f)(1) through (5) of this section to comply with the applicable emission limit or work practice standard in Table 1 to this subpart. You are also exempt from the continuous compliance, reporting, and recordkeeping requirements specified in Tables 5 through 9 to of this subpart for any of these units. This exemption applies to units used as control devices or wastewater treatment units.

(1) A boiler or process heater with a design heat input capacity of 44 megawatts or greater;

(2) A boiler or process heater into which the vent stream is introduced with the primary fuel or is used as the primary fuel;

(3) A boiler or process heater burning hazardous waste that meets the requirements in paragraph (f)(3)(i) or (ii) of this section.

(i) The boiler or process heater has been issued a final permit under 40 CFR part 270 and complies with the requirements of 40 CFR part 266, subpart H; or

(ii) The boiler or process heater has certified compliance with the interim status requirements of 40 CFR part 266, subpart H.

(4) A hazardous waste incinerator that has been issued a final permit under 40 CFR part 270 and that complies with the requirements of 40 CFR part 264, subpart O, or that has certified compliance with the interim status requirements of 40 CFR part 265, subpart O.

(5) A control device for which a performance test was conducted for determining compliance with a rule promulgated by EPA and the test was conducted using the same test methods specified in Table 4 to this subpart and either you have made no deliberate process changes since the test, or you can demonstrate that the results of the performance test with or without adjustments, reliably demonstrate compliance despite process changes.

(g) For purposes of meeting any of the emission limits in Table 1 to this subpart, you may use either a single control technique or any combination of control techniques, as defined in § 63.5610.

(h) You must be in compliance with the provisions of subpart A of this part, except as noted in Table 10 to this subpart.

TESTING AND INITIAL COMPLIANCE REQUIREMENTS

§ 63.5530 How do I demonstrate initial compliance with the emission limits and work practice standards?

(a) You must demonstrate initial compliance with each emission limit and work practice standard that applies to you according to Table 3 to this subpart. You must also install and operate the monitoring equipment according to the requirements in § 63.5545 that apply to you.

(b) You must establish each site-specific operating limit in Table 2 to this subpart that applies to you according to the requirements in § 63.5535 and Table 4 to this Subpart UUUU.

(c) You must submit the Notification of Compliance Status Report containing the results of the initial compliance demonstration according to the requirements in § 63.5575 and Table 7 to this Subpart UUUU.

§ 63.5535 What performance tests and other procedures must I use?

(a) You must conduct each performance test in Table 4 to this Subpart UUUU that applies to you.

(b) You must conduct each performance test for continuous process vents and combinations of batch and continuous process vents according to the requirements in § 63.7(e)(1) and under the specific conditions in Table 4 to this Subpart UUUU. Normal operating conditions will be defined by the affected source. You must conduct each performance test for batch process vents under the specific conditions in Table 4 to this subpart and not under normal operating conditions as specified in § 63.7(e)(1).

(c) You may not conduct performance tests during periods of startup, shutdown, or malfunction, as specified in § 63.7(e)(1).

(d) You must conduct three separate test runs for each performance test required in this section, as specified in § 63.7(e)(3). Each test run must last at least 1 hour.

(e) You must use the equations in paragraphs (e)(1) through (3) of this section to determine the control efficiency for each performance test.

(1) The total organic HAP emission rate is the sum of the emission rates of the individual HAP components. You must calculate the total organic HAP emission rate at the inlet and outlet of each control device for each test run using Equation 1 of this section:

$$ER_{HAP_t} = \sum_{j=1}^{m} ER_{HAP_j} \qquad \text{(Eq. 1)}$$

Where:

ER_{HAPt} = total emission rate of organic HAP in vent stream, kilograms per hour (kg/hr) (pounds per hour (lb/hr)).

ER_{HAPj} = emission rate of individual organic HAP in vent stream, kg/hr (lb/hr).

j = individual HAP.

m = number of individual HAP sampled in each test run.

(2) The total sulfide emission rate is the sum of the emission rates of the individual sulfide components, expressed as carbon disulfide. You must calculate

the total sulfide emission rate at the inlet and outlet of each control device for each test run using Equation 2 of this section:

$$ER_{sulf_t} = ER_{CS_2} + \left(ER_{H_2S^*}\frac{M_{CS_2}}{M_{H_2S}}\right) + \left(ER_{COS^*}\frac{M_{CS_2}}{M_{COS}}\right) \qquad \text{(Eq. 2)}$$

Where:

ER_{sulf_t} = total emission rate of sulfide in vent stream, kg/hr (lb/hr), as carbon disulfide.

ER_{CS_2} = emission rate of carbon disulfide in vent stream, kg/hr (lb/hr).

ER_{H_2S} = emission rate of hydrogen sulfide in vent stream, kg/hr (lb/hr).

M_{CS_2} = mass of carbon disulfide per mole of carbon disulfide, 76 kilograms per kilogram-mole (kg/kg-mol) (76 pounds per pound-mole (lb/lb-mol)).

M_{H_2S} = mass of hydrogen sulfide per mole of carbon disulfide, 68 kg/kg-mol (68 lb/lb-mol).

ER_{COS} = emission rate of carbonyl sulfide in vent stream, kg/hr (lb/hr).

M_{COS} = mass of carbonyl sulfide per mole of carbon disulfide, 120 kg/kg-mol (120 lb/lb-mol).

(3) You must calculate the control efficiency for each control device for each test run using Equation 3 of this section:

$$CE = \frac{ER_i - ER_o}{ER_i}(100\%) \qquad \text{(Eq. 3)}$$

Where:

CE = control efficiency, percent.

ER_i = total emission rate of organic HAP (ER_{HAP_t}) or sulfide (ER_{sulf_t}) in the inlet vent stream of the control device, kg/hr (lb/hr).

ER_o = total emission rate of organic HAP (ER_{HAP_t}) or sulfide (ER_{sulf_t}) in the outlet vent stream of the control device, kg/hr (lb/hr).

(f) When a flare is used to comply with the applicable emission limit or work practice standard in Table 1 to this subpart, you must comply with the requirements in paragraphs (f)(1) through (3) of this section. You are not required to conduct a performance test to determine the control efficiency of the flare or the outlet organic HAP concentration. If you have previously conducted a compliance demonstration for a flare using the techniques specified in paragraphs (f)(1) through (3) of this section, you may use that compliance demonstration to satisfy the requirements of this paragraph if either no deliberate process changes have been made since the compliance demonstration, or the results of the compliance demonstration reliably demonstrate compliance despite process changes.

(1) Conduct a visible emission test using the techniques specified in § 63.11(b)(4);

(2) Determine the net heating value of the gas being combusted using the techniques specified in § 63.11(b)(6); and

(3) Determine the exit velocity using the techniques specified in either § 63.11(b)(7) or (b)(8), as appropriate.

(g) Viscose process affected sources must conduct a month-long initial compliance demonstration according to the requirements in paragraphs (g)(1) through (5) of this section and Table 3 to this subpart.

(1) Viscose process affected sources that must use non-recovery control devices to meet the applicable emission limit in Table 1 to this subpart must conduct an initial performance test of their non-recovery control devices according to the requirements in Table 4 to this subpart to determine the control efficiency of their non-recovery control devices and incorporate this information in their material balance.

(2) Viscose process affected sources that use recovery devices to meet the applicable emission limit in Table 1 to this subpart must determine the quantity of carbon disulfide fed to the process and the quantity of carbon disulfide recovered using the recovery device and incorporate this information in their material balance.

(3) Viscose process affected sources that use viscose process changes to meet the applicable emission limit in Table 1 to this subpart must determine the quantity of carbon disulfide used before and after the process change and incorporate this information in their material balance.

(4) Cellophane operations that use recovery devices to meet the 95 percent toluene emission limit in Table 1 to this subpart must determine the quantity of toluene fed to the process and the toluene recovered using the solvent recovery device and incorporate this information in their material balance.

(5) Using the pertinent material balance information obtained according to paragraphs (g)(1) through (4) of this section, viscose process affected sources must calculate the monthly average percent reduction for their affected source over the month-long period of the compliance demonstration.

(h) During the period of each compliance demonstration, you must establish each site-specific operating limit in Table 2 to this subpart that applies to you according to the requirements in paragraphs (h)(1) through (10) of this section.

(1) For continuous process vents and combinations of batch and continuous process vents, establish your site-specific operating limit using the procedures in § 63.505(b)(2), except that, if you demonstrate initial compliance using a month-long compliance demonstration, references to ''compliance testing'' and ''1-hour runs'' mean ''compliance demonstration'' and references to ''three test runs'' mean ''daily averages during the compliance demonstration'' for purposes of this subpart.

(2) For batch process vents, establish your site-specific operating limit using the procedures in § 63.505(b)(3), except that, if you demonstrate initial compliance using a month-long compliance demonstration, references to ''compliance testing'' and ''performance test'' mean ''compliance demonstration'' for purposes of this subpart.

(3) For condensers, record the outlet (product side) gas or condensed liquid temperature averaged over the same period as the compliance demonstration while the vent stream is routed and constituted normally. Locate the temperature sensor in a position that provides a representative temperature.

(4) For thermal oxidizers, record the firebox temperature averaged over the same period as the compliance demonstration. Locate the temperature sensor in a position that provides a representative temperature.

(5) For water scrubbers, record the pressure drop and flow rate of the scrubber liquid averaged over the same time period as the compliance demonstration while the vent stream is routed and constituted normally. Locate the pressure and flow sensors in positions that provide representative measurements of these parameters.

(6) For caustic scrubbers, record the pressure drop, flow rate of the scrubber liquid, and either the pH, conductivity, or alkalinity of the scrubber liquid averaged over the same time period as the compliance demonstration while the vent stream is routed and constituted normally. Locate the pressure sensors, flow sensors, and pH, conductivity, or alkalinity sensors in positions that provide representative measurements of these parameters. Ensure the sample is properly mixed and representative of the fluid to be measured.

(7) For flares, record the presence of a pilot flame. Locate the pilot flame sensor in a position that provides an accurate and continuous determination of the presence of the pilot flame.

(8) For biofilters, record the pressure drop across the biofilter beds, inlet gas temperature, and effluent pH, averaged over the same time period as the compliance demonstration while the vent stream is routed and constituted normally. Locate the pressure, temperature, and pH sensors in positions that provide representative measurement of these parameters. Ensure the sample is properly mixed and representative of the fluid to be measured.

(9) For carbon adsorbers, record the total regeneration stream mass or volumetric flow during each carbon bed regeneration cycle during the period of the compliance demonstration. Record the temperature of the carbon bed after each carbon bed regeneration cycle during the period of the compliance demonstration (and within 15 minutes of completion of any cooling cycle(s)).

Record the operating time since the end of the last carbon bed regeneration cycle and the beginning of the next carbon bed regeneration cycle during the period of the compliance demonstration. Locate the temperature and flow sensors in positions that provide representative measurement of these parameters.

(10) For oil absorbers, record the flow of absorption liquid through the absorber, the temperatures of the absorption liquid before and after the steam stripper, and the steam flow through the steam stripper averaged during the same period of the compliance demonstration. Locate the temperature and flow sensors in positions that provide representative measurement of these parameters.

§ 63.5540 By what date must I conduct a performance test or other initial compliance demonstration?

(a) You must conduct performance tests or other initial compliance demonstrations no later than 180 calendar days after the compliance date that is specified for your source in § 63.5495 and according to the provisions in § 63.7(a)(2).

§ 63.5545 What are my monitoring installation, operation, and maintenance requirements?

(a) For each CMS required in this section, you must develop and make available for inspection by the permitting authority, upon request, a site-specific monitoring plan that addresses the provisions in paragraphs (a)(1) through (3) of this section.

(1) Installation of the CMS sampling probe or other interface at a measurement location relative to each affected process unit such that the measurement is representative of control of the exhaust emissions (e.g., on or downstream of the last control device);

(2) Performance and equipment specifications for the sample interface, the pollutant concentration or parametric signal analyzer, and the data collection and reduction system; and

(3) Performance evaluation procedures and acceptance criteria (e.g., calibrations).

(b) In your site-specific monitoring plan, you must also address the provisions in paragraphs (b)(1) through (3) of this section.

(1) Ongoing operation and maintenance procedures in accordance with the general requirements of §§ 63.8(c)(1), (3), (4)(ii) and 63.5580(c)(6);

(2) Ongoing data quality assurance procedures in accordance with the general requirements of § 63.8(d)(2); and

(3) Ongoing recordkeeping and reporting procedures in accordance with the general requirements of §§ 63.10(c), (e)(1), (e)(2)(i) and 63.5585.

(c) You must conduct a performance evaluation of each CMS in accordance with your site-specific monitoring plan.

(d) You must operate and maintain the CMS in continuous operation according to the site-specific monitoring plan.

(e) For each continuous emissions monitoring system (CEMS), you must meet the requirements in paragraphs (e)(1) through (6) of this section.

(1) Each CEMS must be installed, operated, and maintained according to the applicable performance specification (PS) listed in paragraphs (e)(1)(i) through (iv) of this section:

(i) PS–7 of 40 CFR part 60, appendix B, for CEMS used to measure hydrogen sulfide emissions;

(ii) PS–8 of 40 CFR part 60, appendix B, for CEMS used to measure volatile organic compound emissions;

(iii) PS–9 of 40 CFR part 60, appendix B, for CEMS that use gas chromatography to measure organic HAP emissions; and

(iv) PS–15 of 40 CFR part 60, appendix B, for CEMS that use Fourier transform infrared spectroscopy to measure organic HAP emissions.

(2) You must conduct a performance evaluation of each CEMS according to the requirements in § 63.8 and according to the applicable performance specification listed in paragraphs (e)(1)(i) through (iv) of this section.

(3) As specified in § 63.8(c)(4)(ii), each CEMS must complete a minimum of one cycle of operation (sampling, analyzing, and data recording) for each successive 15-minute period.

(4) The CEMS data must be reduced to operating data averages computed using valid data from at least 75 percent of the hours during the averaging

period. To have a valid hour of data, you must have four or more data points equally spaced over the 1-hour period (or at least two data points during an hour when calibration, quality assurance, or maintenance activities are being performed), except as specified in paragraph (a)(5) of this section.

(5) The CEMS data taken during periods in which the control devices are not functioning in controlling emissions, as indicated by periods of no flow for all or a portion of an affected source, must not be considered in the averages.

(6) Determine the daily average of all recorded readings for each operating day during the semiannual reporting period described in Table 8 to this subpart.

(f) For each continuous parameter monitoring system (CPMS), you must meet the requirements in paragraphs (f)(1) through (9) of this section.

(1) Satisfy all requirements of performance specifications for CPMS upon promulgation of such performance specifications.

(2) Satisfy all requirements of quality assurance (QA) procedures for CPMS upon promulgation of such QA procedures.

(3) The CPMS must complete a minimum of one cycle of operation for each successive 15-minute period.

(4) To calculate a valid hourly average, there must be at least four equally spaced values for that hour, excluding data collected during the periods described in paragraph (f)(6) of this section.

(5) Have valid hourly data for at least 75 percent of the hours during the averaging period.

(6) The CPMS data taken during periods in which the control devices are not functioning in controlling emissions, as indicated by periods of no flow for all or a portion of an affected source, must not be considered in the averages.

(7) Calculate a daily average using all of the valid hourly averages for each operating day during the semiannual reporting period.

(8) Record the results of each inspection, calibration, and validation check.

(9) Except for redundant sensors, any device that is used to conduct an initial validation or accuracy audit of a CPMS must meet the accuracy requirements specified in paragraphs (f)(9)(i) and (ii) of this section.

(i) The device must have an accuracy that is traceable to National Institute of Standards and Technology (NIST) standards.

(ii) The device must be at least three times as accurate as the required accuracy for the CPMS.

(g) If flow to a control device could be intermittent, you must install, calibrate, and operate a flow indicator at the inlet or outlet of the control device to identify periods of no flow.

CONTINUOUS COMPLIANCE REQUIREMENTS

§ 63.5555 How do I demonstrate continuous compliance with the emission limits, operating limits, and work practice standards?

(a) You must demonstrate continuous compliance with each emission limit, operating limit, and work practice standard in Tables 1 and 2 to this subpart that applies to you according to methods specified in Tables 5 and 6 to this subpart.

(b) You must report each instance in which you were not in continuous compliance (as specified in Tables 5 and 6 to this subpart) with each emission limit, each operating limit, and each work practice standard that apply to you. This includes periods of startup, shutdown, and malfunction. These instances are deviations from the emission limits, operating limits, and work practice standards in this subpart. These deviations must be reported according to the requirements in § 63.5580.

(c) During periods of startup, shutdown, and malfunction, you must operate according to the SSM plan.

(d) Consistent with §§ 63.6(e) and 63.7(e)(1), deviations that occur during a period of startup, shutdown, or malfunction are not violations if you demonstrate to the Administrator's satisfaction that you were operating according to the SSM plan.

§ 63.5560 How do I monitor and collect data to demonstrate continuous compliance?

(a) You must monitor and collect data according to this section.

(b) Except for monitor malfunctions, associated repairs, and required quality assurance or control activities (including, as applicable, calibration checks and required zero and span adjustments), you must monitor continuously (or collect data at all required intervals) at all times that the affected source is operating, including periods of startup, shutdown, and malfunction.

(c) You may not use data recorded during monitoring malfunctions, associated repairs, required quality assurance or control activities, and periods of no flow for all or a portion of an affected source in data averages and calculations used to report emission or operating levels, nor may such data be used in fulfilling a minimum data availability requirement, if applicable. You must use all the data collected during all other periods in assessing the operation of the control device and associated control system.

(d) All terms in this subpart that define a period of time for completing required tasks (e.g., weekly, monthly, quarterly, or annually) refer to the standard calendar periods.

(1) You may change time periods specified in this subpart for completing required tasks by mutual agreement with the Administrator, as specified in subpart A of this part. For example, a period could begin on the compliance date or another date, rather than on the first day of the standard calendar period. For each time period that is changed by agreement, the revised period must remain in effect until it is changed. A new request is not necessary for each recurring period.

(2) Where the period specified for compliance is a standard calendar period, if the initial compliance date occurs after the beginning of the period, then you must comply according to the schedule specified in paragraph (d)(2)(i) or (ii) of this section, as appropriate.

(i) You must comply before the end of the standard calendar period within which the compliance deadline occurs, if there remain at least 3 days for tasks that must be performed weekly, at least 2 weeks for tasks that must be performed monthly, at least 1 month for tasks that must be performed quarterly, or at least 3 months for tasks that must be performed annually; or

(ii) In all instances where a provision of this subpart requires completing a task during each of multiple successive periods, you may perform the required task at any time during the specified period, provided that the task is conducted at a reasonable interval after completion of the task during the previous period.

NOTIFICATIONS, REPORTS, AND RECORDS

§ 63.5575 What notifications must I submit and when?

You must submit each notification in Table 7 to this subpart that applies to you by the date specified in Table 7 to this subpart.

§ 63.5580 What reports must I submit and when?

(a) You must submit each report in Table 8 to this subpart that applies to you.

(b) Unless the Administrator has approved a different schedule for submitting reports under § 63.10, you must submit each compliance report by the date in Table 8 to this subpart and according to the requirements in paragraphs (b)(1) through (5) of this section.

(1) The first compliance report must cover the period beginning on the compliance date that is specified for your affected source in § 63.5495 and ending on June 30 or December 31, whichever date is the first date following the end of the first calendar half after the compliance date that is specified for your source in § 63.5495.

(2) The first compliance report must be postmarked or delivered no later than August 31 or February 28, whichever date follows the end of the first calendar half after the compliance date that is specified for your affected source in § 63.5495.

(3) Each subsequent compliance report must cover the semiannual reporting period from January 1 through June 30 or the semiannual reporting period from July 1 through December 31.

(4) Each subsequent compliance report must be postmarked or delivered no later than August 31 or February 28, whichever date is the first date following the end of the semiannual reporting period.

(5) For each affected source that is subject to permitting regulations pursuant to 40 CFR part 70 or 40 CFR part 71, and if the permitting authority has established dates for submitting semiannual reports pursuant to 40 CFR 70.6(a)(3)(iii)(A) or 40 CFR 71.6(a)(3)(iii)(A), you may submit the first and subsequent compliance reports according to the dates the permitting authority has established instead of according to the dates in paragraphs (b)(1) through (4) of this section.

(c) The compliance report must contain the information in paragraphs (c)(1) through (6) of this section.

(1) Company name and address.

(2) Statement by a responsible official, with that official's name, title, and signature, certifying that, based on information and belief formed after reasonable inquiry, the statements and information in the report are true, accurate, and complete.

(3) Date of report and beginning and ending dates of the reporting period.

(4) If you had a startup, shutdown, or malfunction during the reporting period and you took actions consistent with your startup, shutdown, and malfunction plan, the compliance report must include the information in § 63.10(d)(5)(i).

(5) If there are no deviations from any emission limits, operating limits, or work practice standards that apply to you (see Tables 5 and 6 to this subpart), the compliance report must contain a statement that there were no deviations from the emission limits, operating limits, or work practice standards during the reporting period.

(6) If there were no periods during which the CMS was out-of-control, the compliance report must contain a statement that there were no periods during which the CMS was out-of-control during the reporting period. You must include specifications for out-of-control operation in the quality control plan required under § 63.8(d)(2).

(d) For each deviation from an emission limit or work practice standard that occurs at an affected source where you are not using a CMS to demonstrate continuous compliance with the emission limits or work practice standards in this subpart (see Table 5 to this subpart), the compliance report must contain the information in paragraphs (c)(1) through (4) and (d)(1) and (2) of this section. This includes periods of startup, shutdown, and malfunction.

(1) The total operating time of each affected source during the reporting period.

(2) Information on the number, duration, and cause of deviations (including unknown cause, if applicable), as applicable, and the corrective action taken.

(e) For each deviation from an emission limit or operating limit occurring at an affected source where you are using a CMS to demonstrate continuous compliance with the emission limit or operating limit in this subpart (see Tables 5 and 6 to this subpart), you must include the information in paragraphs (c)(1) through (4) and (e)(1) through (13) of this section. This includes periods of startup, shutdown, and malfunction.

(1) The date and time that each malfunction started and stopped.

(2) The date and time that each CMS was inoperative, except for zero (low-level) and high-level checks.

(3) The date, time, and duration that each CMS was out-of-control.

(4) The date and time that each deviation started and stopped, and whether each deviation occurred during a period of startup, shutdown, or malfunction or during another period.

(5) A summary of the total duration of the deviation during the reporting period and the total duration as a percent of the total source operating time during that reporting period.

(6) A breakdown of the total duration of the deviations during the reporting period into those that are due to startup, shutdown, control equipment problems, process problems, other known causes, and other unknown causes.

(7) A summary of the total duration of CMS downtime during the reporting period and the total duration of CMS downtime as a percent of the total source operating time during that reporting period.

(8) An identification of each HAP that is known to be in the emission stream at the affected source.

(9) A brief description of the process units.

(10) A brief description of the CMS.

(11) The date of the latest CEMS certification or audit or CPMS inspection, calibration, or validation check.

(12) A description of any changes in CMS, processes, or controls since the last reporting period.

(13) The operating day average values of monitored parameters.

(f) If you have obtained a title V operating permit according to 40 CFR part 70 or 40 CFR part 71, you must report all deviations as defined in this subpart in the semiannual monitoring report required by 40 CFR 70.6(a)(3)(iii)(A) or 40 CFR 71.6(a)(3)(iii)(A). If you submit a compliance report according to Table 8 to this subpart along with, or as part of, the semiannual monitoring report required by 40 CFR 70.6(a)(3)(iii)(A) or 40 CFR 71.6(a)(3)(iii)(A), and the compliance report includes all required information concerning deviations from any emission limit, operating limit, or work practice standard in this subpart, then submitting the compliance report will satisfy any obligation to report the same deviations in the semiannual monitoring report. However, submitting a compliance report will not otherwise affect any obligation you may have to report deviations from permit requirements to the permit authority.

§ 63.5585 What records must I keep?

You must keep the records in Table 9 to this subpart that apply to you.

§ 63.5590 In what form and how long must I keep my records?

(a) Your records must be in a form suitable and readily available for expeditious review, according to § 63.10(b)(1).

(b) As specified in § 63.10(b)(1), you must keep each record for 5 years following the date of each occurrence, measurement, maintenance, corrective action, report, or record.

(c) You must keep each record onsite for at least 2 years after the date of each occurrence, measurement, maintenance, corrective action, report, or record, according to § 63.10(b)(1). You can keep the records offsite for the remaining 3 years.

(d) You may keep records in hard copy or computer-readable form including, but not limited to, paper, microfilm, computer, floppy disk, magnetic tape, or microfiche.

OTHER REQUIREMENTS AND INFORMATION

§ 63.5595 What compliance options do I have if part of my affected source is subject to both this subpart and another subpart?

(a) For any Group 1 or Group 2 wastewater stream that is subject to the wastewater provisions in this subpart and the wastewater provisions in 40 CFR parts 260 through 272, you must comply with the requirements of either paragraph (a)(1) or (2) of this section.

(1) You must comply with more stringent control, testing, monitoring, recordkeeping, and reporting requirements that overlap between the provisions of this subpart and the provisions of 40 CFR parts 260 through 272. You must keep a record of the information used to determine which requirements were the most stringent and submit this information if requested by the Administrator.

(2) You must submit, no later than 4 months before the applicable compliance date specified in § 63.5495, a request for a case-by-case determination of requirements. The request must include the information specified in paragraphs (a)(2)(i) and (ii) of this section.

(i) Identification of the wastewater streams that are subject to this subpart and to provisions in 40 CFR parts 260 through 272, determination of the Group 1/Group 2 status of those streams, determination of whether or not those streams are listed or exhibit a characteristic as specified in 40 CFR part 261, and determination of whether the waste management unit is subject to permitting under 40 CFR part 270.

(ii) Identification of the specific control, testing, monitoring, recordkeeping, and reporting requirements that overlap between the provisions of this subject and the provisions of 40 CFR parts 260 through 272.

(b) If any combustion device, recovery device, or recapture device, as defined in § 63.111, subject to this subpart is also subject to the monitoring, recordkeeping, and reporting requirements in 40 CFR part 264, subpart AA or CC, or is subject to monitoring and recordkeeping requirements in 40 CFR part 265, subpart AA or CC, and you

comply with the periodic reporting requirements under 40 CFR part 264, subpart AA or CC, that would apply to the device if the affected source had final-permitted status, you may elect to comply either with the monitoring, recordkeeping, and reporting requirements of this subpart, or with the monitoring, recordkeeping, and reporting requirements in 40 CFR parts 264 and/or 265, as described in this paragraph (b), which will constitute compliance with the monitoring, recordkeeping, and reporting requirements of this subpart. You must identify which option has been selected in the Notification of Compliance Status Report required in § 63.5575 and Table 7 to this subpart.

§ 63.5600 What other requirements apply to me?

(a) Table 10 to this subpart shows which provisions of the General Provisions in §§ 63.1 through 63.15 apply to you.

(b) For the purposes of this subpart, the applicable subpart A requirements in Table 10 to this subpart supersede the applicable subpart A requirements in subparts F, G, H, U and UU of this part.

§ 63.5605 Who implements and enforces this subpart?

(a) This subpart can be implemented and enforced by us, the US Environmental Protection Agency (EPA), or a delegated authority, such as your State, local, or tribal agency. If the Administrator has delegated authority to your State, local, or tribal agency, then that agency has the authority to implement and enforce this subpart. You should contact your EPA Regional Office to find out if this subpart is delegated to your State, local, or tribal agency.

(b) In delegating implementation and enforcement authority of this subpart to a State, local, or tribal agency under subpart E of this part, the Administrator keeps the authorities contained in paragraphs (b)(1) through (4) of this section and does not delegate such authorities to a State, local, or tribal agency.

(1) Approval of alternatives to the non-opacity emission limits, operating limits, and work practice standards in § 63.5505(a) through (c) and under § 63.6(g).

(2) Approval of major alternatives to test methods under § 63.7(e)(2)(ii) and (f) and as defined in § 63.90.

(3) Approval of major alternatives to monitoring under § 63.8(f) and as defined in § 63.90.

(4) Approval of major alternatives to recordkeeping and reporting under § 63.10(f) and as defined in § 63.90.

§ 63.5610 What definitions apply to this subpart?

(a) For all affected sources complying with the batch process vent testing provisions in § 63.490(c) and the operating limit provisions in § 63.505(b), the terms used in this subpart and in subpart U of this part are defined in § 63.482 and paragraph (g) of this section.

(b) For all affected sources complying with the closed-vent system and bypass line requirements in § 63.148, the terms used in this subpart and in subpart G of this part are defined in § 63.111 and paragraph (g) of this section.

(c) For all affected sources complying with the heat exchanger system requirements in § 63.104, the terms used in this subpart and in subpart F of this part are defined in § 63.101 and paragraph (g) of this section.

(d) For cellulose ether affected sources complying with the maintenance wastewater, process wastewater, and liquid stream in open system requirements of subparts F and G of this part, the terms used in this subpart and in subparts F and G of this part are defined in §§ 63.101 and 63.111 and paragraph (g) of this section.

(e) For cellulose ether affected sources complying with the equipment leak requirements of subpart H of this part, the terms used in this subpart and in subpart H of this part are defined in § 63.161 and paragraph (g) of this section.

(f) For cellulose ether affected sources complying with the equipment leak requirements of subpart UU of this part, the terms used in this subpart and in subpart UU of this part are defined in § 63.1020 and paragraph (g) of this section.

(g) All other terms used in this subpart have the meaning given them in §63.2 and this paragraph (g). If a term is defined in §63.2, 63.101, 63.111, 63.161, or 63.1020 and in this paragraph (g), the definition in this paragraph (g) applies for purposes of this subpart.

Bottoms receiver means a tank that collects distillation bottoms before the stream is sent for storage or for further downstream processing.

Carbon disulfide unloading and storage operation means a system at an affected source that includes unloading of carbon disulfide from a railcar using nitrogen or water displacement and storage of carbon disulfide in a storage vessel using nitrogen or water padding.

Cellophane means a thin, transparent cellulose material, which is manufactured using the viscose process and used in food packaging (e.g., candy, cheese, baked goods), adhesive tapes, and membranes for industrial uses, such as batteries.

Cellophane operation means the collection of the cellophane process unit and any other equipment, such as heat exchanger systems, wastewater and waste management units, or cooling towers, that are not associated with an individual cellophane process unit, but are located at a cellophane operation for the purpose of manufacturing cellophane and are under common control.

Cellophane process unit means all equipment which collectively function to manufacture cellophane and any associated storage vessels, liquid streams in open systems (as defined in §63.149), and equipment (as defined in §63.161) that are used in the manufacturing of cellophane.

Cellulose ether means a compound, such as carboxymethyl cellulose, hydroxyethyl cellulose, hydroxypropyl cellulose, methyl cellulose, or hydroxypropyl methyl cellulose, which is manufactured using the cellulose ether process and used mainly as a thickener, viscosifier, or binder in a wide variety of consumer and other products.

Cellulose ether operation means the collection of the cellulose ether process unit and any other equipment, such as heat exchanger systems, wastewater and waste management units, or cooling towers, that are not associated with an individual cellulose ether process unit, but are located at a cellulose ether operation for the purpose of manufacturing a particular cellulose ether and are under common control.

Cellulose ether process means the following:

(1) A manufacturing process that includes the following process steps:

(i) Reaction of cellulose (e.g., wood pulp or cotton linters) with sodium hydroxide to produce alkali cellulose;

(ii) Reaction of the alkali cellulose with a chemical compound(s), such as ethylene oxide, propylene oxide, methyl chloride, or chloroacetic acid, to produce a particular cellulose ether;

(iii) Washing and purification of the cellulose ether; and

(iv) Drying of the cellulose ether.

(2) Solids handling steps downstream of the drying process are not considered part of the cellulose ether process.

Cellulose ether process change means a change to the cellulose ether process that occurred no earlier than January 1992 that allows the recovery of organic HAP, reduction in organic HAP usage, or reduction in organic HAP leaving the reactor. Includes extended cookout.

Cellulose ether process unit means all equipment which collectively function to manufacture a particular cellulose ether and any associated storage vessels, liquid streams in open systems (as defined in §63.149), and equipment (as defined in §63.161 or 63.1020) that are used in the manufacturing of a particular cellulose ether.

Cellulose Ethers Production source category means the collection of operations that use the cellulose ether process to manufacture a particular cellulose ether.

Cellulose food casing means a cellulose casing, which is manufactured using the viscose process, used in forming meat products (e.g., hot dogs, sausages) and, in most cases, removed from the meat products before sale.

Cellulose food casing operation means the collection of the cellulose food casing process unit and any other equipment, such as heat exchanger systems, wastewater and waste management units, or cooling towers, that are not associated with an individual cellulose

food casing process unit, but are located at a cellulose food casing operation for the purpose of manufacturing cellulose food casings and are under common control.

Cellulose food casing process unit means all equipment which collectively function to manufacture cellulose food casings and any associated storage vessels, liquid streams in open systems (as defined in § 63.149), and equipment (as defined in § 63.161) that are used in the manufacturing of cellulose food casings.

Cellulosic sponge means a porous cellulose product, which is manufactured using the viscose process and used mainly for consumer use (e.g., for cleaning).

Cellulosic sponge operation means the collection of the cellulosic sponge process unit and any other equipment, such as heat exchanger systems, wastewater and waste management units, or cooling towers, that are not associated with an individual cellulosic sponge process unit, but are located at a cellulosic sponge operation for the purpose of manufacturing cellulosic sponges and are under common control.

Cellulosic sponge process unit means all equipment which collectively function to manufacture cellulosic sponges and any associated storage vessels, liquid streams in open systems (as defined in § 63.149), and equipment (as defined in § 63.161) that are used in the manufacturing of cellulosic sponges.

Closed-loop system means a system wherein the emission stream is not normally vented to the atmosphere but is recycled back to the process.

Control technique means any equipment or process control used for capturing, recovering, treating, or preventing HAP emissions. The equipment includes recovery devices and non-recovery control devices, as defined in this paragraph. The process control includes cellulose ether process changes and viscose process changes, as defined in this paragraph.

Deviation means any instance in which an affected source subject to this subpart, or an owner or operator of such a source:

(1) Fails to meet any requirement or obligation established by this subpart, including, but not limited to, any emission limit, operating limit, or work practice standard;

(2) Fails to meet any term or condition that is adopted to implement an applicable requirement in this subpart and that is included in the operating permit for any affected source required to obtain such a permit; or

(3) Fails to meet any emission limit, operating limit, or work practice standard in this subpart during start-up, shutdown, or malfunction, regardless of whether or not such failure is permitted by this subpart.

Emission point means an individual process vent, storage vessel, waste management unit, or equipment leak.

Extended cookout (ECO) means a cellulose ether process change that reduces the amount of unreacted ethylene oxide, propylene oxide, methyl chloride, or chloroacetic acid leaving the reactor. This is accomplished by allowing the product to react for a longer time, thereby leaving less unreacted ethylene oxide, propylene oxide, methyl chloride, or chloroacetic acid and reducing emissions of ethylene oxide, propylene oxide, methyl chloride, or chloroacetic acid that might have occurred otherwise.

Miscellaneous Viscose Processes source category means the collection of operations that use the viscose process to manufacture a particular cellulose product. These cellulose products include cellulose food casings, rayon, cellulosic sponges, and cellophane.

Nitrogen storage system means a system of padding the carbon disulfide storage vessels with nitrogen to prevent contact with oxygen.

Nitrogen unloading and storage system means the combination of a nitrogen unloading system for unloading carbon disulfide and a nitrogen storage system for storing carbon disulfide.

Nitrogen unloading system means a system of unloading carbon disulfide from railcars to storage vessels using nitrogen displacement to prevent gaseous carbon disulfide emissions to the atmosphere and to preclude contact with oxygen.

Non-recovery control device means an individual unit of equipment capable of and normally used for the purpose of capturing or treating HAP emissions. Examples of equipment that may be

non-recovery control devices include, but are not limited to, biofilters, caustic scrubbers, flares, thermal oxidizers, and water scrubbers.

Oil absorber means a packed-bed absorber that absorbs pollutant vapors using a type of oil (e.g., kerosene) as the absorption liquid.

Onsite means that records are stored at a location within a major source which encompasses the affected source. Onsite includes, but is not limited to, storage at the affected source or process unit to which the records pertain or storage in central files elsewhere at the major source.

Process vent means a point of discharge to the atmosphere (or the point of entry into a control device, if any) of a HAP-containing gas stream from the process operation. Process vents do not include vents with a flow rate less than 0.005 standard cubic meter per minute or with a concentration less than 50 parts per million by volume (ppmv), vents on storage tanks, vents on wastewater emission sources, or pieces of equipment regulated under equipment leak standards.

Rayon means cellulose fibers, which are manufactured using the viscose process and used in the production of either textiles (e.g., apparel, drapery, upholstery) or non-woven products (e.g., feminine hygiene products, wipes, computer disk liners, surgical swabs).

Rayon operation means the collection of the rayon process unit and any other equipment, such as heat exchanger systems, wastewater and waste management units, or cooling towers, that are not associated with an individual rayon process unit, but are located at a rayon operation for the purpose of manufacturing rayon and are under common control.

Rayon process unit means all equipment which collectively function to manufacture rayon and any associated storage vessels, liquid streams in open systems (as defined in §63.149), and equipment (as defined in §63.161) that are used in the manufacturing of rayon.

Recovery device means an individual unit of equipment capable of and normally used for the purpose of recovering HAP emissions for fuel value (i.e., net positive heating value), use, reuse, or for sale for fuel value, use, or reuse. Examples of equipment that may be recovery devices include, but are not limited to, absorbers, carbon adsorbers, condensers, oil-water separators or organic-water separators, or organic removal devices such as decanters, strippers, or thin-film evaporation units.

Responsible official means responsible official as defined in 40 CFR 70.2.

Safety device means a closure device such as a pressure relief valve, frangible disc, fusible plug, or any other type of device which functions exclusively to prevent physical damage or permanent deformation to a unit or its air emission control equipment by venting gases or vapors directly to the atmosphere during unsafe conditions resulting from an unplanned, accidental, or emergency event. For the purposes of this subpart, a safety device is not used for routine venting of gases or vapors from the vapor headspace underneath a cover such as during filling of the unit or to adjust the pressure in this vapor headspace in responses to normal daily diurnal ambient temperature fluctuations. A safety device is designed to remain in a closed position during normal operation and open only when the internal pressure, or another relevant parameter, exceeds the device threshold setting applicable to the air emission control equipment as determined by the owner or operator based on manufacturer recommendations, applicable regulations, fire protection and prevention codes, standard engineering codes and practices, or other requirements for the safe handling of flammable, combustible, explosive, reactive, or hazardous materials.

Solvent coating process means a manufacturing process in which cellophane film is coated (e.g., with Saran® or nitrocellulose) to impart moisture impermeability to the film and to make it printable. Both Saran and nitrocellulose use the same solvents—tetrahydrofuran and toluene.

Storage vessel means a tank or other vessel used to store liquids that contain one or more HAP. Storage vessels do not include the following:

(1) Vessels permanently attached to motor vehicles such as trucks, railcars, barges, or ships;

(2) Pressure vessels designed to operate in excess of 204.9 kilopascals (30 pounds per square inch) and without emissions to the atmosphere;

(3) Vessels with capacities smaller than 38 cubic meters (10,000 gallons);

(4) Vessels and equipment storing and/or handling material that contains no HAP or contains HAP as impurities only;

(5) Bottoms receiver tanks;

(6) Surge control vessels;

(7) Wastewater storage vessels; and

(8) Storage vessels assigned to another process unit regulated under another subpart of part 63.

Surge control vessel means feed drums, recycle drums, and intermediate vessels. Surge control vessels are used within a process unit when in-process storage, mixing, or management of flow rates or volumes is needed to assist in production of a product.

Total HAP means the sum of organic HAP emissions measured using EPA Method 18.

Total sulfide means the sum of emissions for carbon disulfide, hydrogen sulfide, and carbonyl sulfide reported as carbon disulfide. Total sulfide, as defined for the purposes of this subpart, does not include other sulfur compounds, such as sulfur dioxide.

Viscose process means the following:

(1) A manufacturing process that includes the following process steps:

(i) Reaction of cellulose (e.g., wood pulp) with sodium hydroxide to produce alkali cellulose;

(ii) Reaction of alkali cellulose with carbon disulfide to produce sodium cellulose xanthate;

(iii) Combination of sodium cellulose xanthate with additional sodium hydroxide to produce viscose solution;

(iv) Extrusion of the viscose into various shapes (e.g., hollow casings, thin fibers, thin sheets, molds);

(v) Regeneration of the cellulose product;

(vi) Washing of the cellulose product; and

(vii) Possibly acid or salt recovery.

(2) The cellulose products manufactured using the viscose process include cellulose food casings, rayon, cellulosic sponges, and cellophane.

Viscose process change means a change to the viscose process that occurred no earlier than January 1992 that allows either the recovery of carbon disulfide or a reduction in carbon disulfide usage in the process.

Wastewater means water that:

(1) Contains either:

(i) An annual average concentration of organic HAP (listed in Table 9 to subpart G of this part) of at least 5 parts per million by weight (ppmw) and has an annual average flow rate of 0.02 liter per minute or greater; or

(ii) An annual average concentration of organic HAP (listed in Table 9 to subpart G of this part) of at least 10,000 ppmw at any flow rate.

(2) Is discarded from a cellulose food casing, rayon, cellulosic sponge, cellophane, or cellulose ether process unit that is part of an affected source. Wastewater is process wastewater or maintenance wastewater.

Water storage system means a system of padding the carbon disulfide storage vessels with water to prevent contact with oxygen. The water, which is saturated with carbon disulfide, is later sent to wastewater treatment.

Water unloading and storage system means the combination of a water unloading system for unloading carbon disulfide and a water storage system for storing carbon disulfide.

Water unloading system means a system of unloading carbon disulfide from railcars to storage vessels using water displacement to prevent gaseous carbon disulfide emissions to the atmosphere and to preclude contact with oxygen.

Work practice standard means any design, equipment, work practice, or operational standard, or combination thereof, that is promulgated pursuant to section 112(h) of the Clean Air Act.

TABLES TO SUBPART UUUU OF PART 63

TABLE 1 TO SUBPART UUUU OF PART 63.—EMISSION LIMITS AND WORK PRACTICE STANDARDS

[As required in § 63.5505(a), you must meet the appropriate emission limits and work practice standards in the following table]

For . . .	at . . .	you must . . .
1. the sum of all viscose process vents.	a. each existing cellulose food casing operation.	i. reduce total uncontrolled sulfide emissions (reported as carbon disulfide) by at least 25% based on a 6-month rolling average; ii. for each vent stream that you control using a control device, route the vent stream through a closed-vent system to the control device; and iii. comply with the work practice standard for closed-vent systems.
	b. each new cellulose food casing operation.	i. reduce total uncontrolled sulfide emissions (reported as carbon disulfide) by at least 75% based on a 6-month rolling average; ii. for each vent stream that you control using a control device, route the vent stream through a closed-vent system to the control device; and iii. comply with the work practice standard for closed-vent systems.
	c. each existing rayon operation	i. (1) reduce total uncontrolled sulfide emissions (reported as carbon disulfide) by at least 35% within 3 years after the effective date based on a 6-month rolling average; (2) for each vent stream that you control using a control device, route the vent stream through a closed-vent system to the control device; and (3) comply with the work practice standard for closed-vent systems; and ii. (1) reduce total uncontrolled sulfide emissions (reported as carbon disulfide) by at least 40% within 8 years after the effective date based on a 6-month rolling average; (2) for each vent stream that you control using a control device, route the vent stream through a closed-vent system to the control device; and (3) comply with the work practice standard for closed-vent systems.
	d. each new rayon operation	i. reduce total uncontrolled sulfide emissions (reported as carbon disulfide) by at least 75% based on a 6-month rolling average; ii. for each vent stream that you control using a control device, route the vent stream through a closed-vent system to the control device; and iii. comply with the work practice standard for closed-vent systems.
	e. each existing or new cellulosic sponge operation.	i. reduce total uncontrolled sulfide emissions (reported as carbon disulfide) by at least 75% based on a 6-month rolling average; ii. for each vent stream that you control using a control device, route the vent stream through a closed-vent system to the control device; and iii. comply with the work practice standard for closed-vent systems.
	f. each existing or new cellophane operation.	i. reduce total uncontrolled sulfide emissions (reported as carbon disulfide) by at least 75% based on a 6-month rolling average; ii. for each vent stream that you control using a control device, route the vent stream through a closed-vent system to the control device; and iii. comply with the work practice standard for closed-vent systems.
2. the sum of all solvent coating process vents.	a. each existing or new cellophane operation.	i. reduce uncontrolled toluene emissions by at least 95% based on a 6-month rolling average; ii. for each vent stream that you control using a control device, route the vent stream through a closed-vent system to the control device; and iii. comply with the work practice standard for closed-vent systems.

[As required in § 63.5505(a), you must meet the appropriate emission limits and work practice standards in the following table]

For . . .	at . . .	you must . . .
3. the sum of all cellulose ether process vents.	a. each existing or new cellulose ether operation.	i. reduce total uncontrolled organic HAP emissions by at least 99%; ii. for each vent stream that you control using a control device, route the vent stream through a closed-vent system to the control device; and iii. comply with the work practice standard for closed-vent systems.
4. closed-loop systems	each existing or new cellulose ether operation.	comply by operating the closed-loop system.
5. each carbon disulfide unloading and storage operation.	a. each existing or new viscose process affected source.	i. reduce uncontrolled carbon disulfide emissions by at least 83% from unloading and storage operations based on a 6-month rolling average if you use an alternative control technique not listed in this table source for carbon disulfide unloading and storage operations; if using a control device to reduce emissions, route emissions through a closed-vent system to the control device; and comply with the work practice standard for closed-vent systems; ii. reduce uncontrolled carbon disulfide emissions by at least 0.14% from viscose process vents based on a 6-month rolling average; for each vent stream that you control using a control device, route the vent stream through a closed-vent system to the control device; and comply with the work practice standard for closed-vent systems; iii. install a nitrogen unloading and storage system (as defined in § 63.5610); or iv. install a nitrogen unloading system (as defined in § 63.5610); reduce uncontrolled carbon disulfide emissions by at least 0.045% from viscose process vents based on a 6-month rolling average; for each vent stream that you control, route the vent stream through a closed-vent to the control device; and comply with the work practice standard for closed-vent systems.
6. each toluene storage vessel	a. each existing or new cellophane operation.	i. reduce uncontrolled toluene emissions by at least 95% based on a 6-month rolling average; ii. if using a control device to reduce emissions, route the emissions through a closed-vent system to the control device; and iii. comply with the work practice standard for closed-vent systems.
7. equipment leaks	a. each existing or new cellulose ether operation.	i. comply with the applicable equipment leak standards of §§ 63.162 through 63.179, except that references to ''process unit'' mean ''cellulose ether process unit'' for the purposes of this subpart; or ii. comply with the applicable equipment leak standards of §§ 63.1021 through 63.1037, except that references to ''process unit'' mean ''cellulose ether process unit'' for the purposes of this subpart.
8. all sources of wastewater emissions.	each existing or new cellulose ether operation.	comply with the applicable wastewater provisions of §§ 63.105 and 63.132 through 63.140.
9. liquid streams in open system 2	each existing or new cellulose ether operation.	comply with the applicable provisions of § 63.149, except that references to ''chemical manufacturing process unit'' mean ''cellulose ether process unit'' for the purposes of this subpart.
10. closed-vent system used to route emissions to a control device.	each existing or new affected source	conduct annual inspections, repair leaks, and maintain records as specified in § 63.148.
11. closed-vent system containing a bypass line that could divert a vent stream away from a control device, except for equipment needed for safety purposes (described in § 63.148(f)(3)).	each existing or new affected source	i. install, calibrate, maintain, and operate a flow indicator as specified in § 63.148(f)(1); or ii. secure the bypass line valve in the closed position with a car-seal or lock-and-key type configuration and inspect the seal or closure mechanism at least once per month as specified in § 63.148(f)(2).

[As required in § 63.5505(a), you must meet the appropriate emission limits and work practice standards in the following table]

For . . .	at . . .	you must . . .
12. heat exchanger system that cools process equipment or materials in the process unit.	each existing or new affected source	monitor and repair the heat exchanger system according to § 63.104(a) through (e), except that references to ''chemical manufacturing process unit'' mean ''cellulose food casing, rayon, cellulosic sponge, cellophane, or cellulose ether process unit'' for the purposes of this subpart.

TABLE 2 TO SUBPART UUUU OF PART 63.—OPERATING LIMITS

[As required in § 63.5505(b), you must meet the appropriate operating limits in the following table]

For the following control technique . . .	you must . . .
1. condenser	maintain the daily average condenser outlet gas or condensed liquid temperature no higher than the value established during the compliance demonstration.
2. thermal oxidizer	maintain the daily average thermal oxidizer firebox temperature no lower than the value established during the compliance demonstration.
3. water scrubber	maintain the daily average scrubber pressure drop and scrubber liquid flow rate within the operating values established during the compliance demonstration.
4. caustic scrubber	maintain the daily average scrubber pressure drop, scrubber liquid flow rate, and scrubber liquid pH, conductivity, or alkalinity within the operating values established during the compliance demonstration.
5. flare	maintain the presence of a pilot flame.
6. biofilter	maintain the daily average biofilter inlet gas temperature, biofilter effluent pH, and pressure drop within the operating values established during the compliance demonstration.
7. carbon absorber	maintain the regeneration frequency, total regeneration adsorber stream mass or volumetric flow during carbon bed regeneration, and temperature of the carbon bed after regeneration (and within 15 minutes of completing any cooling cycle(s)) for each regeneration cycle within the values established during the compliance demonstration.
8. oil absorber	maintain the daily average absorption liquid flow, absorption liquid temperature, and steam flow within the values established during the compliance demonstration.
9. any of the control techniques specified in this table.	if using a CEMS, maintain the daily average control efficiency of each control device no lower than the value established during the compliance demonstration.
10. any of the control techniques specified in this table.	a. if you wish to establish alternative operating parameters, submit the application for approval of the alternative operating parameters no later than the notification of the performance test or CEMS performance evaluation or no later than 60 days prior to any other initial compliance demonstration; b. the application must include: information justifying the request for alternative operating parameters (such as the infeasibility or impracticality of using the operating parameters in this final rule); a description of the proposed alternative control device operating parameters; the monitoring approach; the frequency of measuring and recording the alternative parameters; how the operating limits are to be calculated; and information documenting that the alternative operating parameters would provide equivalent or better assurance of compliance with the standard; c. install, operate, and maintain the alternative parameter monitoring systems in accordance with the application approved by the Administrator; d. establish operating limits during the initial compliance demonstration based on the alternative operating parameters included in the approved application; and e. maintain the daily average alternative operating parameter values within the values established during the compliance demonstration.
11. alternative control technique	a. submit for approval no later than the notification of the performance test or CEMS performance evaluation or no later than 60 days prior to any other initial compliance demonstration a proposed site-specific plan that includes: a description of the alternative control device; test results verifying the performance of the control device; the appropriate operating parameters that will be monitored; and the frequency of measuring and recording to establish continuous compliance with the operating limits; b. install, operate, and maintain the parameter monitoring system for the alternative control device in accordance with the plan approved by the Administrator; c. establish operating limits during the initial compliance demonstration based on the operating parameters for the alternative control device included in the approved plan; and d. maintain the daily average operating parameter values for the alternative control technique within the values established during the compliance demonstration.

TABLE 3 TO SUBPART UUUU OF PART 63.—INITIAL COMPLIANCE WITH EMISSION LIMITS AND WORK PRACTICE STANDARDS

[As required in §§ 63.5530(a) and 63.5535(g), you must demonstrate initial compliance with the appropriate emission limits and work practice standards according to the requirements in the following table]

For . . .	at . . .	for the following emission limit or work practice standard . . .	you have demonstrated initial compliance if . . .
1. the sum of all viscose process vents	a. each existing cellulose food casing operation.	i. reduce total uncontrolled sulfide emissions (reported as carbon disulfide) by at least 25% based on a 6-month rolling average; ii. for each vent stream that you control using a control device, route the vent stream through a closed-vent system to the control device; and iii. comply with the work practice standard for closed-vent systems.	(1) the average uncontrolled total sulfide emissions, measured during the month-long compliance demonstration, are reduced by at least 25%; (2) you have a record of the average operating parameter values over the month-long compliance demonstration during which the average uncontrolled total sulfide emissions were reduced by at least 25%; (3) you prepare a material balance that includes the pertinent data used to determine the percent reduction of total sulfide emissions; and (4) you comply with the initial compliance requirements for closed-vent systems.
	b. each new cellulose food casing operation	i. reduce total uncontrolled sulfide emissions (reported as carbon disulfide) by at least 75% based on a 6-month rolling average; ii. for each vent stream that you control using a control device, route the vent stream through a closed-vent system to the control device; and iii. comply with the work practice standard for closed-vent systems.	(1) the average uncontrolled total sulfide emissions, measured during the month-long compliance demonstration, are reduced by at least 75%; (2) you have a record of the average operating parameter values over the month-long compliance demonstration during which the average uncontrolled total sulfide emissions were reduced by at least 75%; (3) you prepare a material balance that includes the pertinent data used to determine the percent reduction of total sulfide emissions; and (4) you comply with the initial compliance requirements for closed-vent systems.

c. each existing rayon operation	i. reduce total uncontrolled sulfide emissions (reported as carbon disulfide) by at least 35% within 3 years after the effective date based on a 6-month rolling average; for each vent stream that you control using a control device, route the vent stream through a closed-vent system to the control device; and comply with the work practice standard for closed-vent systems; and	(1) the average uncontrolled total sulfide emissions, measured during the month-long compliance demonstration, are reduced by at least 35% within 3 years after the effective date; (2) you have a record of the average operating parameter values over the month-long compliance demonstration during which the average uncontrolled total sulfide emissions were reduced by at least 35%; (3) you prepare a material balance that includes the pertinent data used to determine the percent reduction of total sulfide emissions; and (4) you comply with the initial compliance requirements for closed-vent systems; and
	ii. reduce total uncontrolled sulfide emissions (reported as carbon disulfide) by at least 40% within 8 years after the effective date based on a 6-month rolling average; for each vent stream that you control using a control device, route the vent stream through a closed-vent system to the control device; and comply with the work practice standard for closed-vent systems.	(1) the average uncontrolled total sulfide emissions, measured during the month-long compliance demonstration, are reduced by at least 40% within 8 years after the effective date; (2) you have a record of the average operating parameter values over the month-long compliance demonstration during which the average uncontrolled total sulfide emissions were reduced by at least 40%; (3) you prepare a material balance that includes the pertinent data used to determine the percent reduction of the total sulfide emissions; and (4) you comply with the initial compliance requirements for closed-vent systems.

[As required in §§ 63.5530(a) and 63.5535(g), you must demonstrate initial compliance with the appropriate emission limits and work practice standards according to the requirements in the following table]

For . . .	at . . .	for the following emission limit or work practice standard . . .	you have demonstrated initial compliance if . . .
	d. each new rayon operation	i. reduce total uncontrolled sulfide emissions (reported as carbon disulfide) by at least 75%; based on a 6-month rolling average; ii. for each vent stream that you control using a control device, route the vent stream through a closed-vent system to the control device; and iii. comply with the work practice standard for closed-vent systems.	(1) the average uncontrolled total sulfide emissions, measured during the month-long compliance demonstration, are reduced by at least 75%; (2) you have a record of the average operating parameter values over the month-long compliance demonstration during which the average uncontrolled total sulfide emissions were reduced by at least 75%; (3) you prepare a material balance that includes the pertinent data used to determine the percent reduction of total sulfide missions; and (4) you comply with the initial compliance requirements for closed-vent systems.
	e. each existing or new cellulosic sponge operation.	i. reduce total uncontrolled sulfide emissions (reported as carbon disulfide) by at least 75% based on a 6-month rolling average; ii. for each vent stream that you control using a control device, route the vent stream through a closed-vent system to the control device; and iii. comply with the work practice standard for closed-vent systems.	(1) the average uncontrolled total sulfide emissions, measured during the month-long compliance demonstration, are reduced by at least 75%; (2) you have a record of the average operating parameter values over the month-long compliance demonstration during which the average uncontrolled total sulfide emissions were reduced by at least 75%; (3) you prepare a material balance that includes the pertinent data used to determine and the percent reduction of total sulfide emissions; and (4) you comply with the initial compliance requirements for closed-vent systems.

	f. each existing or new cellophane operation	i. reduce total uncontrolled sulfide emissions (reported as carbon disulfide) by at least 75% based on a 6-month rolling average; ii. for each vent stream that you control using a control device, route the vent stream through a closed-vent system to the control device; and iii. comply with the work practice standard for closed-vent systems.	(1) the average uncontrolled total sulfide emissions, measured during the month-long compliance demonstration, are reduced by at least 75%; (2) you have a record of the average operating parameter values over the month-long compliance demonstration during which the average uncontrolled total sulfide emissions were reduced by at least 75%; (3) you prepare a material balance that includes the pertinent data used to determine the percent reduction of total sulfide emissions; and (4) you comply with the initial compliance requirements for closed-vent systems.
2. the sum of all solvent coating process vents.	a. each existing or new cellophane operation	i. reduce uncontrolled toluene emissions by at least 95% based on a 6-month folling average; ii. for each vent stream that you control using a control device, route the vent stream through a closed-vent system to the control device; and iii. comply with the work practice standard for closed-vent systems.	1. the average uncontrolled toluene emissions, measured during the month-long compliance demonstration, are reduced by at least 95%; 2. you have a record of the average operating parameter values over the month-long compliance demonstration during which the average uncontrolled toluene emissions were reduced by at least 95%; 3. you prepare a material balance that includes the pertinent data used to determine the percent reduction of toluene emissions; and 4. you comply with the initial compliance requirements for closed-vent systems.

[As required in §§ 63.5530(a) and 63.5535(g), you must demonstrate initial compliance with the appropriate emission limits and work practice standards according to the requirements in the following table]

For . . .	at . . .	for the following emission limit or work practice standard . . .	you have demonstrated initial compliance if . . .
3. the sum of all cellulose ether process vents.	a. each existing or new cellulose ether operation.	i. reduce total uncontrolled organic HAP emissions by at least 99%; ii. for each vent stream that you control using a control device, route the vent stream through a closed-vent system to the control device; and iii. comply with the work practice standard for closed-vent systems.	(1) average uncontrolled total organic HAP emissions, measured during the 3-hour performance test are reduced by at least 99%; (2) you have a record of the average operating parameter values over the 3-hour performance test during which the average uncontrolled total organic HAP emissions were reduced by at least 99%; (3) you comply with the initial compliance requirements for closed-vent systems; and (4) if you use extended cookout to comply, you measure the HAP charged to the reactor, record the grade of product produced, and then calculate reactor emissions prior to extended cookout by taking a percentage of the total HAP charged, with the percentage determined by the grade of product being produced.
4. closed-loop systems	each existing or new cellulose ether operation.	operate and maintain the closed-loop system for cellulose ether operations.	you have a record certifying that a closed-loop system is in use for cellulose ether operations.
5. each carbon disulfide unloading and storage operation.	a. each existing or new viscose process affected source.	i. reduce uncontrolled carbon disulfide emissions by at least 83% from unloading and storage operations based on a 6-month rolling average if you use an alternative control technique not listed in this table for carbon disulfide unloading and storage operations; if using a control device to reduce emissions, route emissions through a closed-vent system to the control device; and comply with the work practice standard for closed-vent systems;	(1) you have a record documenting the 83% reduction in uncontrolled carbon disulfide emissions; and (2) if venting to a control device to reduce emissions, you comply with the initial compliance requirements for closed-vent systems;

		ii. reduce uncontrolled carbon disulfide by at least 0.14% from viscose process vents based on a 6-month rolling average; for each vent stream that you control using a control device, route the vent stream through a closed-vent system to the control device; and comply with the work practice standard for closed-vent systems;.	(1) you comply with the initial compliance requirements for viscose process vents at existing or new cellulose food casing, rayon, cellulosic sponge, or cellophane operations, as applicable; (2) the 0.14% reduction must be in addition to the reduction already required for viscose process vents at existing or new cellulose food casing, rayon, cellulosic sponge, or cellophane operations, as applicable; and (3) you comply with the initial compliance requirements for closed-vent systems;
		iii. install a nitrogen unloading and storage system; or	you have a record certifying that a nitrogen unloading and storage system is in use; or
		iv. install a nitrogen unloading system; reduce uncontrolled carbon disulfide by at least 0.045% from viscose process vents based on a 6-month rolling average; for each vent stream that you control using a control device, route the vent stream through a closed-vent system to the control device; and comply with the work practice standard for closed-vent systems.	(1) you have a record certifying that a nitrogen unloading system is in use; (2) you comply with the initial compliance requirements for viscose process vents at existing or new cellulose food casing, rayon, cellulosic sponge, or cellophane operations, as applicable; (3) the 0.045% reduction must be in addition to the reduction already required for viscose process vents at cellulose food casing, rayon, cellulosic sponge, or cellophane operations, as applicable; and (4) you comply with the initial compliance requirements for closed-vent systems.
6. each toluene storage vessel	a. each existing or new cellophane operation	i. reduce uncontrolled toluene emissions by at least 95% based on a 6-month rolling average; ii. if using a control device to reduce emissions, route the emissions through a closed-vent system to the control device; and iii. comply with the work practice standard for closed-vent systems.	(1) the average uncontrolled toluene emissions, measured during the month-long compliance demonstration, are reduced by at least 95%; (2) you have a record of the average operating parameter values over the month-long compliance demonstration during which the average uncontrolled toluene emissions were reduced by at least 95%; (3) you prepare a material balance that includes the pertinent data used to determine the percent reduction of toluene emissions; and (4) if venting to a control device to reduce emissions, you comply with the initial compliance requirements for closed-vent systems.

[As required in §§ 63.5530(a) and 63.5535(g), you must demonstrate initial compliance with the appropriate emission limits and work practice standards according to the requirements in the following table]

For . . .	at . . .	for the following emission limit or work practice standard . . .	you have demonstrated initial compliance if . . .
7. equipment leaks	a. each existing or new cellulose ether operation.	i. comply with the applicable equipment leak standards of §§ 63.162 through 63.179; or	you comply with the applicable requirements described in the Notification of Compliance Status Report provisions in § 63.182(a)(2) and (c)(1) through (3), except that references to the term ''process unit'' mean ''cellulose ether process unit'' for the purposes of this subpart; or
		ii. comply with the applicable equipment leak standards of §§ 63.1021 through 63.1027.	you comply with the applicable requirements described in the Initial Compliance Status Report provisions of § 63.1039(a), except that references to the term ''process unit'' mean ''cellulose ether process unit'' for the purposes of this subpart.
8. all sources of wastewater emissions	each existing or new cellulose ether operation.	comply with the applicable wastewater provisions of § 63.105 and §§ 63.132 through 63.140.	you comply with the applicability and Group 1/Group 2 determination provisions of § 63.144 and the initial compliance provisions of §§ 63.105 and 63.145.
9. liquid streams in open systems	each existing or new cellulose ether operation.	comply with the applicable provisions of § 63.149, except that references to ''chemical manufacturing process unit'' mean ''cellulose ether process unit'' for the purposes of this subpart.	you install emission suppression equipment and conduct an initial inspection according to the provisions of to §§ 63.133 through 63.137.
10. closed-vent system used to route emissions to a control device.	a. each existing or new affected source	i. conduct annual inspections, repair leaks, and maintain records as specified in § 63.148.	(1) you conduct an initial inspection of the closed-vent system and maintain records according to § 63.148; (2) you prepare a written plan for inspecting unsafe-to-inspect and difficult-to-inspect equipment according to § 63.148(g)(2) and (h)(2); and (3) you repair any leaks and maintain records according to § 63.148.
11. closed-vent system containing a bypass line that could divert a vent stream away from a control device, except for equipment needed for safety purposes (described in § 63.148(f)(3)).	a. each existing or new affected source	i. install, calibrate, maintain, and operate a flow indicator as specified in § 63.148(f)(1); or.	you have a record documenting that you installed a flow indicator as specified in Table 1 to this subpart; or
		ii. secure the bypass line valve in the closed position with a car-seal or lock-and-key type configuration and inspect the seal or closure mechanism at lease once per month as specified in § 63.148(f)(2).	you have record documenting that you have secured the bypass line valve as specified in Table 1 to this subpart.

12. heat exchanger system that cools process equipment or materials in the process unit.	a. each existing or new affected source	i. monitor and repair the heat exchanger system according to § 63.104(a) through (e), except that references to ''chemical manufacturing process unit'' mean ''cellulose food casing, rayon, cellulosic sponge, cellophane, or cellulose ether process unit'' for the purposes of this subpart.	(1) you determine that the heat exchanger system is exempt from monitoring requirements because it meets one of the conditions in § 63.104(a)(1) through (6), and you document this finding in your Notification of Compliance Status Report; or (2) if your heat exchanger system is not exempt, i. you identify in your Notification of Compliance Status Report the HAP or other representative substance that you will monitor, or ii. you prepare and maintain a site-specific plan containing the information required by § 63.104(c)(1) (i) through (iv) that documents the procedures you will use to detect leaks by monitoring surrogate indicators of the leak.

TABLE 4 TO SUBPART UUUU OF PART 63.—REQUIREMENTS FOR PERFORMANCE TESTS

[As required in §§ 63.5530(b) and 63.5535(a), (b), and (g)(1), you must conduct performance tests, other initial compliance demonstrations, and CEMS performance evaluations and establish operating limits according to the requirements in the following table]

For . . .	at . . .	you must . . .	using . . .	according to the following requirements . . .
1. the sum of all process vents	a. each existing or new affected source.	i. select sampling port's location and the number of traverse points;	EPA Method 1 or 1A of 40 CFR part 60, appendix A; § 63.7(d)(1)(i);	sampling sites must be located at the inlet and outlet to each control device;
		ii. determine velocity and volumetric flow rate;	EPA Method 2, 2A, 2C, 2D, 2F, or 2G in appendix A to part 60 of this chapter;	you may use EPA Method 2A, 2C, 2D, 2F, or 2G as an alternative to using EPA Method 2, as appropriate;
		iii. conduct gas analysis; and	(1) EPA Method 3, 3A, or 3B in appendix A to part 60 of this chapter; or (2) ASME PTC 19.10–1981—Part 10; and	you may use EPA Method 3A or 3B as an alternative to using EPA Method 3; or you may use ASME PTC 19.10–1981—Part 10 (available for purchase from Three Park Avenue, New York, NY 10016–5990) as an alternative to using EPA Method 3B.
		iv. measure moisture content of the stack gas.	EPA Method 4 in appendix A to part 60 of this chapter.	

[As required in §§ 63.5530(b) and 63.5535(a), (b), and (g)(1), you must conduct performance tests, other initial compliance demonstrations, and CEMS performance evaluations and establish operating limits according to the requirements in the following table]

For . . .	at . . .	you must . . .	using . . .	according to the following requirements . . .
2. the sum of all viscose process vents	a. each existing or new viscose process source.	i. measure total sulfide emissions	(1) EPA Method 15 in Appendix A to part 60 of this chapter; or	(a) you must conduct testing of emissions at the inlet and outlet of each control device; (b) you must conduct testing of emissions from continuous viscose process vents and combinations of batch and continuous viscose process vents at normal operating conditions, as specified in §§ 63.7(e)(1) and 63.5535; (c) you must conduct testing of emissions from batch viscose process vents as specified in § 63.490(c), except that the emission reductions required for process vents under this subpart supersede the emission reductions required for process vents under subpart U of this part; and (d) you must collect CPMS data during the period of the initial compliance demonstration and determine the CPMS operating limit during the period of the initial compliance demonstration; or

			(2) carbon disulfide and/or hydrogen sulfide CEMS, as applicable.	(a) you must measure emissions at the inlet and outlet of each control device using CEMS; (b) you must install, operate, and maintain the CEMS according to the applicable performance specification (PS–7, PS–8, PS–9, or PS–15) of 40 CFR part 60, appendix B; and (c) you must collect CEMS emissions data at the inlet and outlet of each control device during the period of the initial compliance demonstration and determine the CEMS operating limit during the period of the initial compliance demonstration.
			3. the sum of all solvent coating process vents.	a. each existing or new cellophane operation i. measure toluene emissions (1) EPA Method 18 in appendix A to part 60 of this chapter; or (a) you must conduct testing of emissions at the inlet and outlet of each control device; (b) you may use EPA Method 18 to determine the control efficiency of any control device for organic compounds; for a combustion device, you must use only HAP that are present in the inlet to the control device to characterize the percent reduction across the combustion device; (c) you must conduct testing of emissions from continuous solvent coating process vents and combinations of batch and continuous solvent coating process vents at normal operating conditions, as specified in §§ 63.7(e)(1) and 63.5535;

[As required in §§ 63.5530(b) and 63.5535(a), (b), and (g)(1), you must conduct performance tests, other initial compliance demonstrations, and CEMS performance evaluations and establish operating limits according to the requirements in the following table]

For . . .	at . . .	you must . . .	using . . .	according to the following requirements . . .
				(d) you must conduct testing of emissions from batch solvent coating process vents as specified in § 63.490(c), except that the emission reductions required for process vents under this subpart supersede the emission reductions required for process vents under subpart U of this part; and
				(e) you must collect CPMS data during the period of the initial compliance demonstration and determine the CPMS operating limit during the period of the initial compliance demonstration; or
			(2) ASTM D6420–99	(a) you must conduct testing of emissions at the inlet and outlet of each control device;

			(b) you may use ASTM D6420–99 (available for purchase from at least one of the following addresses: 100 Barr Harbor Drive, West Conshohocken, PA 19428–2959; or University Microfilms International, 300 North Zeeb Road, Ann Arbor, MI 48106) as an alternative to EPA Method 18 only where: the target compound(s) are those listed in Section 1.1 of ASTM D6420–99; and the target concentration is between 150 parts per billion by volume (ppbv) and 100 ppmv; for target compound(s) not listed in Section 1.1 of ASTM D6420–99, but potentially detected by mass spectrometry, the additional system continuing calibration check after each run, as detailed in Section 10.5.3 of the ASTM method, must be followed, met, documented, and submitted with the data report even if there is no moisture condenser used or the compound is not considered water soluble; and for target compound(s) not listed in Section 1.1 of ASTM D6420–99 and not amenable to detection by mass spectrometry, ASTM D6420–99 does not apply; (c) you must conduct testing of emissions from continuous solvent coating process vents and combinations of batch and continuous solvent coating process vents at normal operating conditions, as specified in §§ 63.7(e)(1) and 63.5535;

[As required in §§ 63.5530(b) and 63.5535(a), (b), and (g)(1), you must conduct performance tests, other initial compliance demonstrations, and CEMS performance evaluations and establish operating limits according to the requirements in the following table]

For . . .	at . . .	you must . . .	using . . .	according to the following requirements . . .
				(d) you must conduct testing of emissions from batch solvent coating process vents as specified in § 63.490(c), except that the emission reductions required for process vents under this subpart supersede the emission reductions required for process vents under subpart U of this part; and (e) you must collect CPMS data during the period of the initial compliance demonstration and determine the CPMS operating limit during the period of the initial compliance demonstration.
4. the sum of all cellulose ether process vents.	a. each existing or new cellulose ether operation.	i. measure total organic HAP emissions.	(1) EPA Method 18 in appendix A to part 60 of this chapter;	(a) you must conduct testing of emissions at the inlet and outlet of each control device; (b) you may use EPA Method 18 to determine the control efficiency of any control device for organic compounds; for a combustion device, you must use only HAP that are present in the inlet to the control device to characterize the percent reduction across the combustion device; (c) you must conduct testing of emissions from continuous cellulose ether process vents and combinations of batch and continuous cellulose ether process vents at normal operating conditions, as specified in §§ 63.7(e)(1) and 63.5535;

			(d) you must conduct testing of emissions from batch cellulose ether process vents as specified in § 63.490(c), except that the emission reductions required for process vents under this subpart supersede the emission reductions required for process vents under subpart U of this part; and (e) you must collect CPMS data during the period of the initial performance test and determine the CPMS operating limit during the period of the initial performance test;
		(2) ASTM D6420–99	(a) you must conduct testing of emissions at the inlet and outlet of each control device;

[As required in §§ 63.5530(b) and 63.5535(a), (b), and (g)(1), you must conduct performance tests, other initial compliance demonstrations, and CEMS performance evaluations and establish operating limits according to the requirements in the following table]

For . . .	at . . .	you must . . .	using . . .	according to the following requirements . . .
				(b) you may use ASTM D6420–99 (available for purchase from at least one of the following addresses: 100 Barr Harbor Drive, West Conshohocken, PA 19428–2959; or University Microfilms International, 300 North Zeeb Road, Ann Arbor, MI (48106) as an alternative to EPA Method 18 only where: the target compound(s) are those listed in Section 1.1 of ASTM D6420–99; and the target concentration is between 150 ppbv and 100 ppmv; for target compound(s) not listed in Section 1.1 of ASTM D6420–99, but pontentially detected by mass spectrometry, the additional system continuing calibration check after each run, as detailed in Section 10.5.3 of the ASTM method, must be followed, met, documented, and submitted with the data report even if there is no moisture condenser used or the compound is not considered water soluble; and for target compound(s) not listed in Section 1.1 of ASTM D6420–99 and not amenable to detection by mass spectrometry, ASTM D6420–99 does not apply; (c) you must conduct testing of emissions from continuous cellulose ether process vents and combinations of batch and continuous cellulose ether process vents at normal operating conditions, as specified in §§ 63.7(e)(1) and 63.5535;

				(d) you must conduct testing of emissions from batch cellulose ether process vents as specified in § 63.490(c), except that the emission reductions required for process vents under this subpart supersede the emission reductions required for process vents under subpart U of this part; and (e) you must collect CPMS data during the period of the initial performance test and determine the CPMS operating limit during the period of the initial performance test;
			(3) EPA Method 25 in appendix A to part 60 of this chapter; or	(a) you must conduct testing of emissions at the inlet and outlet of each control device; (b) you may use EPA Method 25 to determine the control efficiency of combustion devices for organic compounds; you may not use EPA Method 25 to determine the control efficiency of noncombustion control devices; (c) you must conduct testing of emissions from continuous cellulose ether process vents and combinations of batch and continuous cellulose ether process vents at normal operating conditions, as specified in §§ 63.7(e)(1) and 63.5535; (d) you must conduct testing of emissions from batch cellulose ether process vents as specified in § 63.490(c), except that the emission reductions required for process vents under this subpart supersede the emission reductions required for process vents under subpart U of this part; and

[As required in §§ 63.5530(b) and 63.5535(a), (b), and (g)(1), you must conduct performance tests, other initial compliance demonstrations, and CEMS performance evaluations and establish operating limits according to the requirements in the following table]

For . . .	at . . .	you must . . .	using . . .	according to the following requirements . . .
				(e) you must collect CPMS data during the period of the initial performance test and determine the CPMS operating limit during the period of the initial performance test; or
			(4) EPA Method 25A in appendix A to part 60 of this chapter.	(a) you must conduct testing of emissions at the inlet and outlet of each control device; (b) you may use EPA Method 25A if: an exhaust gas volatile organic matter concentration of 50 ppmv or less is required in order to comply with the emission limit; the volatile organic matter concentration at the inlet to the control device and the required level of control are such as to result in exhaust volatile organic matter concentrations of 50 ppmv or less; or because of the high control efficiency of the control device, the anticipated volatile organic matter concentration at the control device exhaust is 50 ppmv or less, regardless of the inlet concentration; (c) you must conduct testing of emissions from continuous cellulose ether process vents and combinations of batch and continuous cellulose ether process vents at normal operating conditions, as specified in §§ 63.7(e)(1) and 63.5535;

				(d) you must conduct testing of emissions from batch cellulose ether process vents as specified in §63.490(c), except that the emission reductions required for process vents under this subpart supersede the emission reductions required for process vents under subpart U of this part; and (e) you must collect CPMS data during the period of the initial performance test and determine the CPMS operating limit during the period of the initial performance test.
5. each toluene storage vessel	a. each existing or new cellophane operation.	i. measure toluene emissions	(1) EPA Method 18 in appendix A to part 60 of this chapter; or	(a) if venting to a control device to reduce emissions, you must conduct testing of emissions at the inlet and outlet of each control device; (b) you may use EPA Method 18 to determine the control efficiency of any control device for organic compounds; for a combustion device, you must use only HAP that are present in the inlet to the control device to characterize the percent reduction across the combustion device; (c) you must conduct testing of emissions from continuous storage vessel vents and combinations of batch and continuous storage vessel vents at normal operating conditions, as specified in §§63.7(e)(1) and 63.5535 for continuous process vents;

[As required in §§ 63.5530(b) and 63.5535(a), (b), and (g)(1), you must conduct performance tests, other initial compliance demonstrations, and CEMS performance evaluations and establish operating limits according to the requirements in the following table]

For . . .	at . . .	you must . . .	using . . .	according to the following requirements . . .
				(d) you must conduct testing of emissions from batch storage vessel vents as specified in § 63.490(c) for batch process vents, except that the emission reductions required for process vents under this subpart supersede the emission reductions required for process vents under subpart U of this part; and
				(e) you must collect CPMS data during the period of the initial compliance demonstration and determine the CPMS operating limit during the period of the initial compliance demonstration; or
			(2) ASTM D6420–99	(a) if venting to a control device to reduce emissions, you must conduct testing of emissions at the inlet and outlet of each control device;

				(b) you may use ASTM D6420–99 (available for purchase from at least one of the following addresses: 100 Barr Harbor Drive, West Conshohocken, PA 19428–2959; or University Microfilms International, 300 North Zeeb Road, Ann Arbor, MI 48106) as an alternative to EPA Method 18 only where: the target compound(s) are those listed in Section 1.1 of ASTM D6420–99, and the target concentration is between 150 ppbv and 100 ppmv; for target compound(s) not listed in Section 1.1 of ASTM D6420-99, but potentially detected by mass spectrometry, the additional system continuing calibration check after each run, as detailed in Section 10.5.3 of the ASTM method, must be followed, met, documented, and submitted with the data report even if there is no moisture condenser used or the compound is not considered water soluble; and for target compound(s) not listed in Section 1.1 of ASTM D6420–99 and not amenable to detection by mass spectrometry, ASTM D6420–99 does not apply; (c) you must conduct testing of emissions from continuous storage vessel vents and combinations of batch and continuous storage vessel vents at normal operating conditions, as specified in §§63.7(e)(1) and 63.5535 for continuous process vents;

[As required in §§ 63.5530(b) and 63.5535(a), (b), and (g)(1), you must conduct performance tests, other initial compliance demonstrations, and CEMS performance evaluations and establish operating limits according to the requirements in the following table]

For . . .	at . . .	you must . . .	using . . .	according to the following requirements . . .
				(d) you must conduct testing of emissions from batch storage vessel vents as specified in § 63.490(c) for batch process vents, except that the emission reductions required for process vents under this subpart supersede the emission reductions required for process vents under subpart U of this part; and (e) you must collect CPMS data during the period of the initial compliance demonstration and determine the CPMS operating limit during the period of the initial compliance demonstration.
6. the sum of all process vents controlled using a flare.	each existing or new affected source.	measure visible emissions	EPA Method 22 in appendix A to part 60 of this chapter.	you must conduct the flare visible emissions test according to § 63.11(b).
7. equipment leaks	a. each existing or new cellulose ether operation.	i. measure leak rate	(1) applicable equipment leak test methods in § 63.180; or	you must follow all requirements for the applicable equipment leak test methods in § 63.180; or
			(2) applicable equipment leak test methods in 63.1023.	you must follow all requirements for the applicable equipment leak test methods in § 63.1023.
8. all sources of wastewater emissions	a. each existing or new cellulose ether operation.	i. measure wastewater HAP emissions.	(1) applicable wastewater test methods and procedures in §§ 63.144 and 63.145; or	You must follow all requirements for the applicable wastewater test methods and procedures in §§ 63.144 and 63.145; or

			(2) applicable wastewater test methods and procedures in §§63.144 and 63.145, using ASTM D5790–95 as an alternative to EPA Method 624 in appendix A to part 163 of this chapter.	you must follow all requirements for the applicable waste water test methods and procedures in §§63.144 and 63.145, except that you may use ASTM D5790–95 (available for purchase from at least one of the following addresses: 100 Barr Harbor Drive, West Conshohocken, PA 19428–2959; or University Microfilms International, 300 North Zeeb Road, Ann Arbor, MI 48106) as an alternative to EPA Method 624, under the condition that this ASTM method be used with the sampling procedures of EPA Method 25D or an equivalent method.
9. any emission point	a. each existing or new affected source using a CEMS to demonstrate compliance.	i. conduct a CEMS performance evaluation.	(1) applicable requirements in §63.8 and applicable performance specification (PS–7, PS–8, PS–9, or PS–15) in appendix B to part 60 of this chapter.	(a) you must conduct the CEMS performance evaluation during the period of the initial compliance demonstration according to the applicable requirements in §63.8 and the applicable performance specification (PS–7, PS–8, PS–9, or PS–15) of 40 CFR part 60, appendix B; (b) you must install, operate, and maintain the CEMS according to the applicable performance specification (PS–7, PS–8, PS–9, or PS–15) of 40 CFR part 60, appendix B; and (c) you must collect CEMS emissions data at the inlet and outlet of each control device during the period of the initial compliance demonstration and determine the CEMS operating limit during the period of the initial compliance demonstration.

TABLE 5 TO SUBPART UUUU OF PART 63.—CONTINUOUS COMPLIANCE WITH EMISSION LIMITS AND WORK PRACTICE STANDARDS

[As required in § 63.5555(a), you must demonstrate continuous compliance with the appropriate emission limits and work practice standards according to the requirements in the following table]

For . . .	at . . .	for the following emission limit or work practice standard . . .	you must demonstrate continuous compliance by . . .
1. the sum of all viscose process vents	a. each existing or new viscose process affected source.	i. reduce total uncontrolled sulfide emissions (reported as carbon disulfide) by at least the specified percentage based on a 6-month rolling average; ii. for each vent stream that you control using a control device, route the vent stream through a closed-vent system to the control device; and c. comply with the work practice standard for closed-vent systems.	(1) maintaining a material balance that includes the pertinent data used to determine the percent reduction of total sulfide emissions; (2) documenting the percent reduction of total sulfide emissions using the pertinent data from the material balance; and (3) complying with the continuous compliance requirements for closed-vent systems.
2. the sum of all solvent coating process vents.	a. each existing or new cellophane operation	i. reduce uncontrolled toluene emissions by at least 95% based on a 6-month rolling average; ii. for each vent stream that you control using a control device, route the vent stream through a closed-vent system to the control device; and iii. comply with the work practice standard for closed-vent systems.	(1) maintaining a material balance that includes the pertinent data used to determine the percent reduction of toluene emissions; (2) documenting the percent reduction of toluene emissions using the pertinent data from the material balance; and (3) complying with the continuous compliance requirements for closed-vent systems.
3. the sum of all cellulose ether process vents.	a. each existing or new cellulose ether operation.	i. reduce total uncontrolled organic HAP emissions by at least 99%; ii. for each vent stream that you control using a control device, route the vent stream through a closed-vent system to the control device; and iii. comply with the work practice standard for closed-vent systems.	(1) complying with the continuous compliance requirements for closed-vent systems; and (2) if using extended cookout to comply, monitoring reactor charges and keeping records to show that extended cookout was employed.
4. closed-loop systems	each existing or new cellulose either operation.	operate and maintain a closed-loop system ..	keeping a record certifying that a closed-loop system is in use for cellulose ether operations.
5. each carbon disulfide unloading and storage operation.	a. each existing or new viscose process affected source.	i. (1) reduce uncontrolled carbon disulfide emissions by at least 83% based on a 6-month rolling average if you use an alternative control technique not listed in this table for carbon disulfide unloading and storage operations; (2) if using a control device to reduce emissions, route emissions through a closed-vent system to the control device; and (3) comply with the work practice standard for closed-vent systems;	(a) keeping a record documenting the 83% reduction in carbon disulfide emissions; and (b) if venting to a control device to reduce emissions, complying with the continuous compliance requirements for closed-vent systems;

		ii. (1) reduce total uncontrolled sulfide emissions by at least 0.14% from viscose process vents based on a 6-month rolling average; (2) for each vent stream that you control using a control device, route the vent stream through a closed-vent system to the control device; and (3) comply with the work practice standard for closed-vent systems;	(a) maintaining a material balance that includes the pertinent data used to determine the percent reduction of total sulfide emissions; (b) documenting the percent reduction of total sulfide emissions using the pertinent data from the material balance; and (c) complying with the continuous compliance requirements for closed-vent systems;
		iii. install a nitrogen unloading and storage system; or	Keeping a record certifying that a nitrogen unloading and storage system is in use; or
		iv. (1) install a nitrogen unloading system; (2) reduce total uncontrolled sulfide emissions by at least 0.045% from viscose process vents based on a 6-month rolling average; (3) for each vent stream that you control using a control device, route the vent stream through a closed-vent system to the control device; and (4) comply with the work practice standard for closed-vent systems.	(a) keeping a record certifying that a nitrogen unloading system is in use; (b) maintaining a material balance that includes the pertinent data used to determine the percent reduction of total sulfide emissions; (c) documenting the percent reduction of total sulfide emissions using the pertinent data from the material balance; and (d) complying with the continuous compliance requirements for closed-vent systems.
6. each toluene storage vessel	a. each existing or new cellophane operation	i. reduce uncontrolled toluene emissions by at least 95% based on a 6-month rolling average; ii. if using a control device to reduce emissions, route the emissions through a closed-vent system to the control device; and iii. comply with the work practice standard for closed-vent systems.	(1) maintaining a material balance that includes the pertinent data used to determine the percent reduction of toluene emissions; (2) documenting the percent reduction of toluene emissions using the pertinent data from the material balance; and (3) if venting to a control device to reduce emissions, complying with the continuous compliance requirements for closed-vent systems.
7. equipment leaks	a. each existing or new cellulose ether operation.	i. applicable equipment leak standards of §§ 63.162 through 63.179; or ii. applicable equipment leak standards of §§ 63.1021 through 63.1037.	complying with the applicable equipment leak continuous compliance provisions of §§ 63.162 through 63.179; or complying with the applicable equipment leak continuous compliance provisions of §§ 63.1021 through 63.1037.
8. all sources of wasstewater emissions	each existing or new cellulose ether operation.	applicable wastewater provisions of § 63.105 and §§ 63.132 through 63.140.	complying with the applicable wastewater continuous compliance provisions of §§ 63.105, 63.143, and 63.148.
9. liquid streams in open systems	each existing or new cellulose ether operation.	comply with the applicable provisions of § 63.149, except that references to ''chemical manufacturing process unit'' mean ''cellulose ether process unit'' for the purposes of this subpart.	conducting inspections, repairing failures, documenting delay of repair, and maintaining records of failures and corrective actions according to §§ 63.133 through 63.137.

[As required in § 63.5555(a), you must demonstrate continuous compliance with the appropriate emission limits and work practice standards according to the requirements in the following table]

For . . .	at . . .	for the following emission limit or work practice standard . . .	you must demonstrate continuous compliance by . . .
10. closed-vent system used to route emissions to a control device.	each existing or new affected source	conduct annual inspections, repair leaks, maintain records as specified in § 63.148.	conducting the inspections, repairing leaks, and maintaining records according to § 63.148.
11. closed-vent system containing a bypass line that could divert a vent stream away from a control device, except for equipment needed for safety purposes (described in § 63.148(f)(3).	a. each existing or new affected source	i. install, calibrate, maintain, and operate a flow indicator as specified in § 63.148(f)(1); or	(1) taking readings from the flow indicator at least once every 15 minutes; (2) maintaining hourly records of flow indicator operation and detection of any diversion during the hour, and (3) recording all periods when the vent stream is diverted from the control stream or the flow indicator is not operating; or
		ii. secure the bypass line valve in the closed position with a car-seal or lock-and-key type configuration and inspect the seal or mechanism at least once per month as specified in § 63.148(f)(2).	(1) maintaining a record of the monthly visual inspection of the seal or closure mechanism for the bypass line; and (2) recording all periods when the seal mechanism is broken, the bypass line valve position has changed, or the key for a lock-and-key type lock has been checked out.
12. heat exchanger system that cools process equipment or materials in the process unit.	a. each existing or new affected source	i. monitor and repair the heat exchanger system according to § 63.104(a) through (e), except that references to ''chemical manufacturing process unit'' mean ''cellulose food casing, rayon, cellulosic sponge, cellophane, or cellulose ether process unit'' for the purposes of this subpart.	(1) monitoring for HAP compounds, other substances, or surrogate indicators at the frequency specified in § 63.104(b) or (c); (2) repairing leaks within the time period specified in § 63.104(d)(1); (3) confirming that the repair is successful as specified in § 63.104(d)(2); (4) following the procedures in § 63.104(e) if you implement delay of repair; and (5) recording the results of inspections and repair according to § 63.104(f)(1).

TABLE 6 TO SUBPART UUUU OF PART 63.—CONTINUOUS COMPLIANCE WITH OPERATING LIMITS

[As required in § 63.5555(a), you must demonstrate continuous compliance with the appropriate operating limits according to the requirements in the following table:]

For the following control technique . . .	for the following operating limit . . .	you must demonstrate continuous compliance by . . .
1. condenser	maintain the daily average condenser outlet gas or condensed liquid temperature no higher than the value established during the compliance demonstration.	collecting the condenser outlet gas or condensed liquid temperature data according to § 63.5545; reducing the condenser outlet gas temperature data to daily averages; and maintaining the daily average condenser outlet gas or condensed liquid temperature no higher than the value established during the compliance demonstration.
2. thermal oxidizer	maintain the daily average thermal oxidizer firebox temperature no lower than the value established during the compliance demonstration.	collecting the thermal oxidizer firebox temperature data according to § 63.5545; reducing the thermal oxidizer firebox temperature data to daily averages; and maintaining the daily average thermal oxidizer firebox temperature no lower than the value established during the compliance demonstration.
3. water scrubber	maintain the daily average scrubber pressure drop and scrubber liquid flow rate within the values established during the compliance demonstration.	collecting the scrubber pressure drop and scrubber liquid flow rate data according to § 63.5545; reducing the scrubber parameter data to daily averages; and maintaining the daily scrubber parameter values within the values established during the compliance demonstration.
4. caustic scrubber	maintain the daily average scrubber pressure drop, scrubber liquid flow rate, and scrubber liquid pH, conductivity, or alkalinity within the values established during the compliance demonstration.	collecting the scrubber pressure drop, scrubber liquid flow rate, and scrubber liquid pH, conductivity, or alkalinity data according to § 63.5545; reducing the scrubber parameter data to daily averages; and maintaining the daily scrubber parameter values within the values established during the compliance demonstration.
5. flare	maintain the presence of a pilot flame	collecting the pilot flame data according to § 63.5545; and maintaining the presence of the pilot flame.
6. biofilter	maintain the daily average biofilter inlet gas temperature, biofilter effluent pH, and pressure drop within the values established during the compliance demonstration.	collecting the biofilter inlet gas temperature, biofilter effluent pH, and biofilter pressure drop data according to § 63.5545; reducing the biofilter parameter data to daily averages; and maintaining the daily biofilter parameter values within the values established during the compliance demonstration.
7. carbon absorber	maintain the regeneration frequency, total regeneration stream mass or volumetric flow during carbon bed regeneration and temperature of the carbon bed after regeneration (and within 15 minutes of completing any cooling cycle(s)) for each regeneration cycle within the values established during the compliance demonstration.	collecting the data on regeneration frequency, total regeneration stream mass or volumetric flow during carbon bed regeneration and temperature of the carbon bed after regeneration (and within 15 minutes of completing any cooling cycle(s)) for each regeneration cycle according to § 63.5545; and maintaining carbon absorber parameter values for each regeneration cycle within the values established during the compliance demonstration.
8. oil absorber	maintain the daily average absorption liquid flow, absorption liquid temperature, and steam flow within the values established during the compliance demonstration.	collecting the absorption liquid flow, absorption liquid temperature, and steam flow data according to § 63.5545; reducing the oil absorber parameter data to daily averages; and maintaining the daily oil absorber parameter values within the values established during the compliance demonstration.

[As required in § 63.5555(a), you must demonstrate continuous compliance with the appropriate operating limits according to the requirements in the following table:]

For the following control technique . . .	for the following operating limit . . .	you must demonstrate continuous compliance by . . .
9. any of the control techniques specified in this table.	if using a CEMS, maintain the daily average control efficiency for each control device no lower than the value established during the compliance demonstration.	collecting CEMS emissions data at the inlet and outlet of each control device according to § 63.5545; determining the control efficiency values for each control device using the inlet and outlet CEMS emissions data; reducing the control efficiency values for each control device to daily averages; and maintaining the daily average control efficiency for each control device no lower than the value established during the compliance demonstration.

TABLE 7 TO SUBPART UUUU OF PART 63.—NOTIFICATIONS

[As required in §§ 63.5490(c)(4), 63.5530(c), 63.5575, and 63.5595(b), you must submit the appropriate notifications specified in the following table]

If you . . .	then you must . . .
1. are required to conduct a performance test	submit a notification of intent to conduct a performance test at least 60 calendar days before the performance test is scheduled to begin, as specified in §§ 63.7(b)(1) and 63.9(e).
2. wish to use an alternative monitoring method	submit a request to use alternative monitoring method no later than the notification of the initial performance test or CEMS performance evaluation or 60 days prior to any other initial compliance demonstration, as specified in § 63.8(f)(4).
3. start up your affected source before June 11, 2002	submit an initial notification no later than 120 days after June 11, 2002, as specified in § 63.9(b)(2).
4. start up your new or reconstructed source on or after June 11, 2002	submit an initial notification no later than 120 days after you become subject to this subpart, as specified in § 63.9(b)(3).
5. cannot comply with the relevant standard by the applicable compliance date	submit a request for extension of compliance no later than 120 days before the compliance date, as specified in §§ 63.9(c) and 63.6(i)(4).
6. are subject to special requirements as specified in § 63.6(b)(3) and (4)	notify the Administrator of your compliance obligations no later than the initial notification dates established in § 63.9(b) for new sources not subject to the special provisions, as specified in § 63.9(d).
7. are required to conduct visible emission observations to determine the compliance of flares as specified in § 63.11(b)(4).	notify the Administrator of the anticipated date for conducting the observations specified in § 63.6(h)(5), as specified in §§ 63.6(h)(4) and 63.9(f).
8. are required to conduct a performance test or other initial compliance demonstration as specified in Table 3 to this subpart.	a. submit a Notification of Compliance Status Report, as specified in § 63.9(h); and b. submit the Notification of Compliance Status Report, including the performance test, CEMS performance evaluation, and any other initial compliance demonstration results within 240 calendar days following the compliance date specified in § 63.5495.
9. comply with the equipment leak requirements of subpart H of this part for existing or new cellulose ether affected sources.	comply with the notification requirements specified in § 63.182(a)(1) and (2), (b), and (c)(1) through (3) for equipment leaks, with the Notification of Compliance Status Reports required in subpart H included in the Notification of Compliance Status Report required in this subpart.
10. comply with the equipment leak requirements of subpart UU of this part for existing or new cellulose ether affected sources.	comply with the notification requirements specified in § 63.1039(a) for equipment leaks, with the Notification Compliance Status Reports required in subpart UU of this part included in the Notification of Compliance Status Report required in this subpart.
11. comply with the wastewater requirements of subparts F and G of this part for existing or new cellulose ether affected sources.	comply with the notification requirements specified in §§ 63.146(a) and (b), 63.151, and 63.152(a)(1) through (3) and (b)(1) through (5) for wastewater, with the Notification of Compliance Status Reports required in subpart G of this part included in the Notification of Compliance Status Report required in this subpart.

TABLE 8 TO SUBPART UUUU OF PART 63.—REPORTING REQUIREMENTS

[As required in § 63.5580, you must submit the appropriate reports specified in the following table]

You must submit a compliance report, which must contain the following information . . .	and you must submit the report . . .
1. if there are no deviations from any emission limit, operating limit, or work practice standard during the reporting period, then the report must contain the information specified in § 63.5580(c); 2. if there were no periods during which the CMS was out-of-control, then the report must contain a statement that there were no periods during which the CMS was out-of-control during the reporting period; you must develop and include specifications for out-of-control operation in the CMS quality control plan required under § 63.8(d)(2); 3. if there is a deviation from any emission limit, operating limit, or work practice standard during the reporting period, then the report must contain the information specified in § 63.5580(c) and (d); 4. if there were periods during which the CMS was out-of-control, then the report must contain the information specified in § 63.5580(e); 5. if you had a startup, shutdown, or malfunction during the reporting period and you took actions consistent with your SSM plan, then the report must contain the information specified in § 63.10(d)(5)(i); 6. if you had a startup, shutdown, or malfunction during the reporting period and you took actions that are not consistent with your SSM plan, then the report must contain the information specified in § 63.10(d)(5)(ii); 7. the report must contain any change in information already provided, as specified in § 63.9(j); 8. for cellulose ether affected sources complying with the equipment leak requirements of subpart H of this part, the report must contain the information specified in § 63.182(a)(3) and (6) and (d)(2) through (4); 9. for cellulose ether affected sources complying with the equipment leak requirements of subpart UU of this part, the report must contain the information specified in § 63.1039(b); 10. for cellulose ether affected sources complying with the wastewater requirements of subparts F and G of this part, the report must contain the information specified in §§ 63.146(c) through (e) and 63.152(a)(4) and (5) and (c) through (e); 11. for affected sources complying with the closed-vent system provisions in § 63.148, the report must contain the information specified in § 63.148(j)(1); 12. for affected sources complying with the bypass line provisions in § 63.148(f), the report must contain the information specified in § 63.148(j)(2) and (3); 13. for affected sources invoking the delay of repair provisions in § 63.104(e) for heat exchanger systems, the next compliance report must contain the information in § 63.104(f)(2)(i) through (iv); if the leak remains unrepaired, the information must also be submitted in each subsequent compliance report until the repair of the leak is reported; and 14. for storage vessels subject to the emission limits and work practice standards in Table 1 to Subpart UUUU, the report must contain the periods of planned routine maintenance during which the control device does not comply with the emission limits or work practice standards in Table 1 to this subpart	semiannually as specified in § 63.5580(b).

TABLE 9 TO SUBPART UUUU OF PART 63.—RECORDKEEPING REQUIREMENTS

[As required in § 63.5585, you must keep the appropriate records specified in the following table]

If you operate . . .	then you must keep . . .	and the record(s) must contain . . .
1. an existing or new affected source.	a copy of each notification and report that you submitted to comply with this subpart.	all documentation supporting any Initial Notification or Notification of Compliance Status Report that you submitted, according to the requirements in § 63.10(b)(2)(xiv), and any compliance report required under this subpart.
2. an existing or new affected source.	a. the records in § 63.6(e)(3)(iii) through (iv) related to startup, shutdown, and malfunction.	i. SSM plan; ii. when actions taken during a startup, shutdown, or malfunction are consistent with the procedures specified in the SSM plan, records demonstrating that the procedures specified in the plan were followed; iii. records of the occurrence and duration of each startup, shutdown, or malfunction; and iv. when actions taken during a startup, shutdown, or malfunction are not consistent with the procedures specified in the SSM plan, records of the actions taken for that event.

[As required in § 63.5585, you must keep the appropriate records specified in the following table]

If you operate . . .	then you must keep . . .	and the record(s) must contain . . .
3. an existing or new affected source.	a. a site-specific monitoring plan.	i. information regarding the installation of the CMS sampling source probe or other interface at a measurement location relative to each affected process unit such that the measurement is representative of control of the exhaust emissions (e.g., on or downstream of the last control device); ii. performance and equipment specifications for the sample interface, the pollutant concentration or parametric signal analyzer, and the data collection and reduction system; iii. performance evaluation procedures and acceptance criteria (e.g., calibrations); iv. ongoing operation and maintenance procedures in accordance with the general requirements of §§ 63.8(c)(1), (3), and (4)(ii) and 63.5580(c)(6); v. ongoing data quality assurance procedures in accordance with the general requirements of § 63.8(d)(2); and vi. ongoing recordkeeping and reporting procedures in accordance with the general requirements of §§ 63.10(c), (e)(1), and (e)(2)(i) and 63.5585.
4. an existing or new affected source.	records of performance tests and CEMS performance evaluations, as required in § 63.10(b)(2)(viii) and any other initial compliance demonstrations.	all results of performance tests, CEMS performance evaluations, and any other initial compliance demonstrations, including analysis of samples, determination of emissions, and raw data.
5. an existing or new affected source.	a. records for each CEMS	i. records described in § 63.10(b)(2)(vi) through (xi); ii. previous (superseded) versions of the performance evaluation plan as required in § 63.8(d)(3); iii. request for alternatives to relative accuracy test for CEMS as required in § 63.8(f)(6)(i); iv. records of the date and time that each deviation started and stopped, and whether the deviation occurred during a period of startup, shutdown, or malfunction or during another period; and v. records required in Table 6 to Subpart UUUU to show continuous compliance with the operating limit.
6. an existing or new affected source.	a. records for each CPMS	i. records required in Table 6 to Subpart UUUU to show continuous compliance with each operating limit that applies to you; and ii. results of each CPMS calibration, validation check, and inspection required by § 63.5545(b)(4).
7. an existing or new cellulose ether affected ether source.	records of closed-loop systems.	records certifying that a closed-loop system is in use for cellulose ether operations.
8. an existing or new viscose process affected source.	records of nitrogen unloading and storage systems or nitrogen unloading systems.	records certifying that a nitrogen unloading and storage system or nitrogen unloading system is in use.
9. an existing or new viscose process affected source.	records of material balances ..	all pertinent data from the material balances used to estimate the 6-month rolling average percent reduction in HAP emissions.
10. an existing or new viscose process affected source.	records of calculations	documenting the percent reduction in HAP emissions using pertinent data from the material balances.
11. an existing or new cellulose ether affected source.	a. extended cookout records ..	i. the amount of HAP charged to the reactor; ii. the grade of product produced; iii. the calculated amount of HAP remaining before extended cookout; and iv. information showing that extended cookout was employed.
12. an existing or new cellulose ether affected source.	a. equipment leak records	i. the records specified in § 63.181 for equipment leaks; or ii. the records specified in 63.1038 for equipment leaks.
13. an existing or new cellulose ether affected source.	wastewater records	the records specified in §§ 63.105, 63.147, and 63.152(f) and (g) for wastewater.
14. an existing or new affected source.	closed-vent system records	the records specified in § 63.148(i).
15. an existing or new affected source.	a. bypass line records	i. hourly records of flow indicator operation and detection of any diversion during the hour and records of all periods when the vent stream is diverted from the control stream or the flow indicator is not operating; or ii. the records of the monthly visual inspection of the seal or closure mechanism and of all periods when the seal mechanism is broken, the bypass line valve position has changed, or the key for a lock-and-key type lock has been checked out and records of any car-seal that has broken.

[As required in § 63.5585, you must keep the appropriate records specified in the following table]

If you operate . . .	then you must keep . . .	and the record(s) must contain . . .
16. an existing or new affected source.	heat exchanger system records.	records of the results of inspections and repair according to source § 63.104(f)(1).
17. an existing or new affected source.	control device maintenance records.	records of planned routine maintenance for control devices used to comply with the percent reduction emission limit for storage vessels in Table 1 to Subpart UUUU.
18. an existing or new affected source.	safety device records	a record of each time a safety device is opened to avoid unsafe conditions according to § 63.5505(d).

TABLE 10 TO SUBPART UUUU OF PART 63.—APPLICABILITY OF GENERAL PROVISIONS TO SUBPART UUUU

[As required in §§ 63.5515(h) and 63.5600, you must comply with the appropriate General Provisions requirements specified in the following table]

Citation	Subject	Brief description	Applies to Subpart UUUU
§ 63.1	Applicability	Initial applicability determination; applicability after standard established; permit requirements; extensions, notifications.	Yes.
§ 63.2	Definitions	Definitions for part 63 standards	Yes.
§ 63.3	Units and Abbreviations	Units and abbreviations for part 63 standards	Yes.
§ 63.4	Prohibited Activities	Prohibited activities; compliance date; circumvention, severability.	Yes.
§ 63.5	Construction and Reconstruction	Applicability; applications; approvals	Yes.
§ 63.6(a)	Applicability	General provisions apply unless compliance extension; general provisions apply to area sources that become major.	Yes.
§ 63.6(b)(1) through(4)	Compliance Dates for New and Reconstructed sources.	Standards apply at effective date; 3 years after effective date; upon startup; 10 years after construction or reconstruction commences for CAA section 112(f).	Yes.
§ 63.6(b)(5)	Notification	Must notify if commenced construction or reconstruction after proposal.	Yes.
§ 63.6(b)(6)	[Reserved].		
§ 63.6(b)(7)	Compliance Dates for New and Reconstructed Area Sources That Become Major.	Area sources that become major must comply with major source and standards immediately upon becoming major, regardless of whether required to comply when they were an area source.	Yes.
§ 63.6(c)(1) and (2)	Compliance Dates for Existing Sources	Comply according to date in subpart, which must be no later than 3 years after effective date; for CAA section 112(f) standards, comply within 90 days of effective date unless compliance extension.	Yes, except that existing rayon operations are given 8 years to comply with 40% reduction emission limit, as specified in § 63.5495(b)(2)(iii).
§ 63.6(c)(3) and (4)	[Reserved].		
§ 63.6(c)(5)	Compliance Dates for Existing Area Sources That Become Major.	Area sources that become major must comply with major source standards by date indicated in subpart or by equivalent time period (e.g., 3 years).	Yes.
§ 63.6(d)	[Reserved].		
§ 63.6(e)(1) and (2)	Operation and Maintenance	Operate to minimize emissions at all times; correct malfunctions as soon as practicable; operation and maintenance requirements independently enforceable; information Administrator will use to determine if operation and maintenance requirements were met.	Yes.
§ 63.6(e)(3)	Startup, Shutdown, and Malfunction Plan	Requirement for startup, shutdown, and malfunction and SSM plan; content of SSM plan.	Yes.

[As required in §§ 63.5515(h) and 63.5600, you must comply with the appropriate General Provisions requirements specified in the following table]

Citation	Subject	Brief description	Applies to Subpart UUUU
§ 63.6(f)(1)	Compliance Except During SSM	You must comply with emission standards at all times except during SSM.	Yes.
§ 63.6(f)(2) and (3)	Methods for Determining Compliance	Compliance based on performance test, operation and maintenance plans, records, inspection.	Yes.
§ 63.6(g)(1) through (3)	Alternative Standard	Procedures for getting an alternative standard	Yes.
§ 63.6(h)	Opacity and Visible Emission (VE) Standards	Requirements for opacity and visible emission limits.	Yes, but only for flares for which EPA Method 22 observations are required under § 63.11(b).
§ 63.6(i)(1) through (14)	Compliance Extension	Procedures and criteria for Administrator to grant compliance extension.	Yes.
§ 63.6(j)	Presidential Compliance Exemption	President may exempt source category from requirement to comply with subpart.	Yes.
§ 63.7(a)(1) and (2)	Performance Test Dates	Dates for conducting initial performance test; testing and other compliance demonstrations; must conduct 180 days after first subject to subpart.	Yes.
§ 63.7(a)(3)	Section 114 Authority	Administrator may require a performance test under CAA Section 114 at any time.	Yes.
§ 63.7(b)(1)	Notification of Performance Test	Must notify Administrator 60 days before the test.	Yes.
§ 63.7(b)(2)	Notification of Rescheduling	If rescheduling a performance test is necessary, must notify Administrator 5 days before scheduled date of rescheduled test.	Yes.
§ 63.7(c)	Quality Assurance and Test Plan	Requirement to submit site-specific test plan 60 days before the test or on date Administrator agrees with; test plan approval procedures; performance audit requirements; internal and external QA procedures for testing.	No.
§ 63.7(d)	Testing Facilities	Requirements for testing facilities	Yes.
§ 63.7(e)(1)	Conditions for Conducting Performance Tests	Performance tests must be conducted under representative conditions; cannot conduct performance tests during SSM; not a violation to exceed standard during SSM.	Yes, except that performance tests for batch process vents must be conducted under other conditions, as specified in Table 4 to this subpart.
§ 63.7(e)(2)	Conditions for Conducting Performance Tests	Must conduct according to this subpart and EPA test methods unless Administrator approves alternative.	Yes.
§ 63.7(e)(3)	Test Run Duration	Must have three test runs of at least 1 hour each; compliance is based on arithmetic mean of three runs; conditions when data from an additional test run can be used.	Yes.
§ 63.7(f)	Alternative Test Method	Procedures by which Administrator can grant approval to use an alternative test method.	Yes.

§ 63.7(g)	Performance Test Data Analysis	Must include raw data in performance test report; must submit performance test data 60 days after end of test with the Notification of Compliance Status Report; keep data for 5 years.	Yes.
§ 63.7(h)	Waiver of Tests	Procedures for Administrator to waive performance test.	Yes.
§ 63.8(a)(1)	Applicability of Monitoring Requirements	Subject to all monitoring requirements in standard.	Yes.
§ 63.8(a)(2)	Performance Specifications	Performance specifications in Appendix B of 40 CFR part 60 apply.	Yes.
§ 63.8(a)(3)	[Reserved].		
§ 63.8(a)(4)	Monitoring with Flares	Unless your subpart says otherwise, the requirements for flares in § 63.11 apply.	Yes.
§ 63.8(b)(1)	Monitoring	Must conduct monitoring according to standard unless Administrator approves alternative.	Yes.
§ 63.8(b)(2) and (3)	Multiple Effluents and Multiple Monitoring Systems.	Specific requirements for installing monitoring systems; must install on each effluent before it is combined and before it is released to the atmosphere unless Administrator approves otherwise; if more than one monitoring system on an emission point, must report all monitoring system results, unless one monitoring system is a backup.	Yes.
§ 63.8(c)(1)	Monitoring System Operation and Maintenance	Maintain monitoring system in a manner consistent with good air pollution control practices.	Yes.
§ 63.8(c)(1)(i)	Routine and Predictable SSM	Follow the SSM plan for routine repairs; keep parts for routine repairs readily available; reporting requirements for SSM when action is described in SSM plan.	Yes.
§ 63.8(c)(1)(ii)	SSM Not in SSM plan	Reporting requirements for SSM when action is not described in SSM plan.	Yes.
§ 63.8(c)(1)(iii)	Compliance with Operation and Maintenance Requirements.	How Administrator determines if source complying with operation and maintenance requirements; review of source operation and maintenance procedures, records; manufacturer's instructions, recommendations; inspection.	Yes.
§ 63.8(c)(2) and (3)	Monitoring System Installation	Must install to get representative emission of parameter measurements; must verify operational status before or at performance test.	Yes.
§ 63.8(c)(4)	Continuous Monitoring System (CMS) Requirements.	CMS must be operating except during breakdown, out-of control, repair, maintenance, and high-level calibration drifts.	No. Replaced with language in § 63.5560.

[As required in §§ 63.5515(h) and 63.5600, you must comply with the appropriate General Provisions requirements specified in the following table]

Citation	Subject	Brief description	Applies to Subpart UUUU
§ 63.8(c)(4)(i) and (ii)	Continuous Monitoring System (CMS) Requirements.	Continuous opacity monitoring systems (COMS) must have a minimum of one cycle of sampling and analysis for each successive 10-second period and one cycle of data recording for each successive 6-minute period; CEMS must have a minimum of one cycle of operation for each successive 15-minute period.	Yes, except that § 63.8(c)(4)(i) does not apply because subpart UUUU does not require COMS.
§ 63.8(c)(5)	COMS Minimum Procedures	COMS minimum procedures	No. Subpart UUUU does not require COMS.
§ 63.8(c)(6)	CMS Requirements	Zero and high level calibration check requirements; out-of-control periods.	No. Replaced with language in § 63.5545.
§ 63.8(c)(7) and (8)	CMS Requirements	Out-of-control periods, including reporting	No. Replaced with language in § 63.5580(c)(6).
§ 63.8(d)	CMS Quality Control	Requirements for CMS quality control, including calibration, etc.; must keep quality control plan on record for 5 years; keep old versions for 5 years after revisions.	No, except for requirements in § 63.8(d)(2).
§ 63.8(e)	CMS Performance Evaluation	Notification, performance evaluation test plan, reports.	Yes, except that § 63.8(e)(5)(ii) does not apply because subpart UUUU does not require COMS.
§ 63.8(f)(1) through (5)	Alternative Monitoring Method	Procedures for Administrator to approve alternative monitoring.	Yes, except that no site-specific test plan is required. The request to use an alternative monitoring method must be submitted with the notification of performance test or CEMS performance evaluation or 60 days prior to any initial compliance demonstration.
§ 63.8(f)(6)	Alternative to Relative Accuracy Test	Procedures for Administrator to approve alternative relative accuracy tests for CEMS.	Yes.
§ 63.8(g)(1) through (4)	Data Reduction	COMS 6-minute averages calculated over at least 36 evenly spaced data points; CEMS 1-hour averages computed over at least four equally spaced data points; data that cannot be used in average.	No. Replaced with language in § 63.5545(e).
§ 63.8(g)(5)	Data Reduction	Data that cannot be used in computing averages for CEMS and COMS.	No. Replaced with language in § 63.5560(b).
§ 63.9(a)	Notification Requirements	Applicability and State delegation	Yes.
§ 63.9(b)(1) through (5)	Initial Notifications	Submit notification subject 120 days after effective date; notification of intent to construct or reconstruct; notification of commencement of construction or reconstruction; notification of startup; contents of each.	Yes.
§ 63.9(c)	Request for Compliance Extension	Can request if cannot comply by date or if installed BACT/LAER.	Yes.
§ 63.9(d)	Notification of Special Compliance Requirements for New Source.	For sources that commence construction between proposal and promulgation and want to comply 3 years after effective date.	Yes.

§ 63.9(e)	Notification of Performance Test	Notify Administrator 60 days prior	Yes.
§ 63.9(f)	Notification of VE or Opacity Test	Notify Administrator 30 days prior	Yes, but only for flares for which EPA Method 22 observations are required as part of a flare compliance assessment.
§ 63.9(g)	Additional Notifications When Using CMS	Notification of performance evaluation; notification using COMS data; notification that exceeded criterion for relative accuracy.	Yes, except that § 63.9(g)(2) does not apply because subpart UUUU does not require COMS.
§ 63.9(h)(1) through (6)	Notification of Compliance Status Report	Contents; due 60 days after end of performance test or other compliance demonstration, except for opacity or VE, which are due 30 days after; when to submit to Federal vs. State authority.	Yes, except that Table 7 to this subpart specifies the submittal date for the notification. The contents of the notification will also include the results of EPA Method 22 observations required as part of a flare compliance assessment.
§ 63.9(i)	Adjustment of Submittal Deadlines	Procedures for Administrator to approve change in when notifications must be submitted.	Yes.
§ 63.9(j)	Change in Previous Information	Must submit within 15 days after the change	Yes, except that the notification must be submitted as part of the next semiannual compliance report, as specified in Table 8 to this subpart.
§ 63.10(a)	Recordkeeping and Reporting	Applies to all, unless compliance extension; when to submit to Federal vs. State authority; procedures for owners of more than one source.	Yes.
§ 63.10(b)(1)	Recordkeeping and Reporting	General requirements; keep all records readily available; keep for 5 years.	Yes.
§ 63.10(b)(2)(i) through (iv)	Records Related to Startup, Shutdown, and Malfunction.	Occurrence of each of operation (process equipment); occurrence of each malfunction of air pollution equipment; maintenance on air pollution control equipment; actions during startup, shutdown, and malfunction.	Yes.
§ 63.10(b)(2)(vi), (x), and (xi)	CMS Records	Malfunctions, inoperative, out-of-control; calibration checks, adjustments, maintenance.	Yes.
§ 63.10(b)(2)(vii) and (ix)	Records	Measurements to demonstrate compliance with emission limits; performance test, performance evaluation, and VE observation results; measurements to determine conditions of performance tests and performance evaluations.	Yes, including results of EPA Method 22 observations required as part of a flare compliance assessment.
§ 63.10(b)(2)(xii)	Records	Records when under waiver	Yes.
§ 63.10(b)(2)(xiii)	Records	Records when using alternative to relative accuracy test.	Yes.
§ 63.10(b)(2)(xiv)	Records	All documentation supporting Initial Notification and Notification of Compliance Status Report.	Yes.
§ 63.10(b)(3)	Records	Applicability determinations	Yes.
§ 63.10(c)(1) through (6), (9) through (15).	Records	Additional records for CMS	Yes.
§ 63.10(c)(7) and (8)	Records	Records of excess emissions and parameter monitoring exceedances for CMS.	No. Replaced with language in Table 9 to this subpart.
§ 63.10(d)(1)	General Reporting Requirements	Requirement to report	Yes.

[As required in §§ 63.5515(h) and 63.5600, you must comply with the appropriate General Provisions requirements specified in the following table]

Citation	Subject	Brief description	Applies to Subpart UUUU
§ 63.10(d)(2)	Report of Performance Test Results	When to submit to Federal or State authority	Yes, except that Table 7 to this subpart specifies the submittal date for the Notification of Compliance Status Report.
§ 63.10(d)(3)	Reporting Opacity or VE Observations	What to report and when	Yes, but only for flares for which EPA Method 22 observations are required as part of a flare compliance assessment.
§ 63.10(d)(4)	Progress Reports	Must submit progress reports on schedule if under compliance extension.	Yes.
§ 63.10(d)(5)	Startup, Shutdown, and Malfunction Reports	Contents and submission	Yes, except that the immediate SSM report must be submitted as part of the next semi-annual compliance report, as specified in Table 8 to this subpart.
§ 63.10(e)(1) and (2)	Additional CMS Reports	Must report results for each CEMS on a unit; written copy of performance evaluation; three copies of COMS performance evaluation.	Yes, except that § 63.10(e)(2)(ii) does not apply because subpart UUUU does not require COMS.
§ 63.10(e)(3)	Reports	Excess emission reports	No. Replaced with language in § 63.5580.
§ 63.10(e)(3)(i) through (iii)	Reports	Schedule for reporting excess emissions and parameter monitor exceedance (now defined as deviations).	No. Replaced with language in § 63.5580.
§ 63.10(e)(3)(iv) through (v)	Excess Emissions Reports	Requirement to revert to quarterly submission if there is an excess emissions and parameter monitor exceedance (now defined as deviations); provision to request semiannual reporting after compliance for 1 year; submit report by 30th day following end of quarter or calendar half; if there has not been an exceedance or excess emission (now defined as deviations), report contents is a statement that there have been no deviations.	No. Replaced with language in § 63.5580.
§ 63.10(e)(3)(iv) and (v)	Excess Emissions Reports	Must submit report containing all of the information in § 63.10(c)(5) through (13), § 63.8(c)(7) and (8).	No. Replaced with language in § 63.5580.
§ 63.10(e)(3)(vi) through (viii)	Excess Emissions Report and Summary Report	Requirements for reporting excess emissions for CMS (now called deviations); requires all of the information in § 63.10(c)(5) through (13), § 63.8(c)(7) and (8).	No. Replaced with language in § 63.5580.

§ 63.10(e)(4)	Reporting COMS data	Must submit COMS data with performance test data.	No. Subpart UUUU does not require COMS.
§ 63.10(f)	Waiver for Recordkeeping or Reporting	Procedures for Administrator to waive	Yes.
§ 63.11	Flares	Requirements for flares	Yes.
§ 63.12	Delegation	State authority to enforce standards	Yes.
§ 63.13	Addresses	Addresses where reports, notifications, and requests are sent.	Yes.
§ 63.14	Incorporation by Reference	Test methods incorporated by reference	Yes.
§ 63.15	Availability of Information	Public and confidential information	Yes.

Subpart VVVV—National Emission Standards for Hazardous Air Pollutants for Boat Manufacturing

SOURCE: 66 FR 44232, Aug. 22, 2001, unless otherwise noted.

WHAT THE SUBPART COVERS

§ 63.5680 What is the purpose of this subpart?

(a) This subpart establishes national emission standards for hazardous air pollutants (HAP) for new and existing boat manufacturing facilities with resin and gel coat operations, carpet and fabric adhesive operations, or aluminum recreational boat surface coating operations. This subpart also establishes requirements to demonstrate initial and continuous compliance with the emission standards.

§ 63.5683 Does this subpart apply to me?

(a) This subpart applies to you if you meet both of the criteria listed in paragraphs (a)(1) and (2) of this section.

(1) You are the owner or operator of a boat manufacturing facility that builds fiberglass boats or aluminum recreational boats.

(2) Your boat manufacturing facility is a major source of HAP either in and of itself, or because it is collocated with other sources of HAP, such that all sources combined constitute a major source.

(b) A boat manufacturing facility is a facility that manufactures hulls or decks of boats from fiberglass or aluminum, or assembles boats from premanufactured hulls and decks, or builds molds to make fiberglass hulls or decks. A facility that manufactures only parts of boats (such as hatches, seats, or lockers) or boat trailers is not considered a boat manufacturing facility for the purpose of this subpart.

(c) A major source is any stationary source or group of stationary sources located within a contiguous area and under common control that emits or can potentially emit, considering controls, in the aggregate, 9.1 megagrams (10 tons) or more per year of a single HAP or 22.7 megagrams (25 tons) or more per year of a combination of HAP.

(d) This subpart does not apply to aluminum coating operations on aluminum boats intended for commercial or military (nonrecreational) use, antifoulant coatings, assembly adhesives, fiberglass hull and deck coatings, research and development activities, mold sealing and release agents, mold stripping and cleaning solvents, and wood coatings as defined in § 63.5779. This subpart does not apply to materials contained in handheld aerosol cans.

§ 63.5686 How do I demonstrate that my facility is not a major source?

You can demonstrate that your facility is not a major source by using the procedures in either paragraph (a) or (b) of this section.

(a) *Emission option*. You must demonstrate that your facility does not emit, and does not have the potential to emit as defined in § 63.2, considering federally enforceable permit limits, 9.1 megagrams (10 tons) or more per year of a single HAP or 22.7 megagrams (25 tons) or more per year of a combination of HAP. To calculate your facility's potential to emit, you must include emissions from the boat manufacturing facility and all other sources that are collocated and under common ownership or control with the boat manufacturing facility.

(b) *Material consumption option*. This option can be used if you manufacture either fiberglass boats or aluminum recreational boats at your facility. You must meet the criteria in paragraph (b)(1), (2), or (3) of this section and comply with the requirements in paragraph (c) of this section. If you initially rely on the limits and criteria specified in paragraph (b)(1), (2), or (3) of this section to become an area source, but then exceed the relevant limit (without first obtaining and complying with other limits that keep your potential to emit HAP below major source levels), your facility will then become a major source, and you must comply with all applicable provisions of this subpart beginning on the compliance date specified in § 63.5695. Nothing in this paragraph is intended to

preclude you from limiting your facility's potential to emit through other federally enforceable mechanisms available through your permitting authority.

(1) If your facility is primarily a fiberglass boat manufacturing facility, you must demonstrate that you consume less than 45.4 megagrams per rolling 12-month period of all combined polyester-and vinylester-based resins and gel coats (including tooling and production resins and gel coats, and clear gel coats), and you must demonstrate that at least 90 percent of total annual HAP emissions at the facility (including emissions from aluminum recreational boat manufacturing or other source categories) originate from the fiberglass boat manufacturing materials.

(2) If your facility is primarily an aluminum recreational boat manufacturing facility, you must demonstrate that it consumes less than 18.2 megagrams per rolling 12-month period of all combined surface coatings, aluminum wipedown solvents, application gun cleaning solvents, and carpet and fabric adhesives; and you must demonstrate that at least 90 percent of total annual HAP emissions at the facility (including emissions from fiberglass boat manufacturing or other source categories) originate from the aluminum recreational boat manufacturing materials.

(3) If your facility is a fiberglass boat or an aluminum recreational boat manufacturing facility, you must demonstrate that the boat manufacturing materials consumed per rolling 12-month period contain a total of less than 4.6 megagrams of any single HAP and less than 11.4 megagrams of all combined HAP, and you must demonstrate that at least 90 percent of total annual HAP emissions at the facility (including emissions from other source categories) originate from these boat manufacturing materials.

(c) If you use the material consumption option described in paragraph (b) of this section to demonstrate that you are not a major source, you must comply with the requirements of paragraphs (c)(1) through (3) of this section.

(1) If your facility has HAP emissions that do not originate from boat manufacturing operations or materials described in paragraph (b), then you must keep any records necessary to demonstrate that the 90 percent criterion is met.

(2) A rolling 12-month period includes the previous 12 months of operation. You must maintain records of the total amount of materials described in paragraph (b) of this section used each month, and, if necessary, the HAP content of each material and the calculation of the total HAP consumed each month. Because records are needed for a 12-month period, you must keep records beginning no later than 12 months before the compliance date specified in § 63.5695. Records must be kept for 5 years after they are created.

(3) In determining whether the 90 percent criterion included in paragraph (b) of this section is met, you do not need to include materials used in routine janitorial, building, or facility grounds maintenance; personal uses by employees or other persons; or products used for maintaining motor vehicles operated by the facility.

§ 63.5689 What parts of my facility are covered by this subpart?

The affected source (the portion of your boat manufacturing facility covered by this subpart) is the combination of all of the boat manufacturing operations listed in paragraphs (a) through (f) of this section.

(a) Open molding resin and gel coat operations (including pigmented gel coat, clear gel coat, production resin, tooling gel coat, and tooling resin).

(b) Closed molding resin operations.

(c) Resin and gel coat mixing operations.

(d) Resin and gel coat application equipment cleaning operations.

(e) Carpet and fabric adhesive operations.

(f) Aluminum hull and deck coating operations, including solvent wipedown operations and paint spray gun cleaning operations, on aluminum recreational boats.

§ 63.5692 How do I know if my boat manufacturing facility is a new source or an existing source?

(a) A boat manufacturing facility is a new source if it meets the criteria in

paragraphs (a)(1) through (3) of this section.

(1) You commence construction of the affected source after July 14, 2000.

(2) It is a major source.

(3) It is a completely new boat manufacturing affected source where no other boat manufacturing affected source existed prior to the construction of the new source.

(b) For the purposes of this subpart, an existing source is any source that is not a new source.

§ 63.5695 When must I comply with this subpart?

You must comply with the standards in this subpart by the compliance dates specified in Table 1 to this subpart.

STANDARDS FOR OPEN MOLDING RESIN AND GEL COAT OPERATIONS

§ 63.5698 What emission limit must I meet for open molding resin and gel coat operations?

(a) You must limit organic HAP emissions from the five open molding operations listed in paragraphs (a)(1) through (5) of this section to the emission limit specified in paragraph (b) of this section. Operations listed in paragraph (d) are exempt from this limit.

(1) Production resin.

(2) Pigmented gel coat.

(3) Clear gel coat.

(4) Tooling resin.

(5) Tooling gel coat.

(b) You must limit organic HAP emissions from open molding operations to the limit specified by equation 1 of this section, based on a 12-month rolling average.

$$\text{HAP Limit} = \left[46(M_R) + 159(M_{PG}) + 291(M_{CG}) + 54(M_{TR}) + 214(M_{TG})\right] \qquad \text{(Eq. 1)}$$

Where:

HAP Limit= total allowable organic HAP that can be emitted from the open molding operations, kilograms.

M_R = mass of production resin used in the past 12 months, excluding any materials exempt under paragraph (d) of this section, megagrams.

M_{PG} = mass of pigmented gel coat used in the past 12 months, excluding any materials exempt under paragraph (d) of this section, megagrams.

M_{CG} = mass of clear gel coat used in the past 12 months, excluding any materials exempt under paragraph (d) of this section, megagrams.

M_{TR} = mass of tooling resin used in the past 12 months, excluding any materials exempt under paragraph (d) of this section, megagrams.

M_{TG} = mass of tooling gel coat used in the past 12 months, excluding any materials exempt under paragraph (d) of this section, megagrams.

(c) The open molding emission limit is the same for both new and existing sources.

(d) The materials specified in paragraphs (d)(1) through (3) of this section are exempt from the open molding emission limit specified in paragraph (b) of this section.

(1) Production resins (including skin coat resins) that must meet specifications for use in military vessels or must be approved by the U.S. Coast Guard for use in the construction of lifeboats, rescue boats, and other life-saving appliances approved under 46 CFR subchapter Q or the construction of small passenger vessels regulated by 46 CFR subchapter T. Production resins for which this exemption is used must be applied with nonatomizing (non-spray) resin application equipment. You must keep a record of the resins for which you are using this exemption.

(2) Pigmented, clear, and tooling gel coat used for part or mold repair and touch up. The total gel coat materials included in this exemption must not exceed 1 percent by weight of all gel coat used at your facility on a 12-month rolling-average basis. You must keep a record of the amount of gel coats used per month for which you are

using this exemption and copies of calculations showing that the exempt amount does not exceed 1 percent of all gel coat used.

(3) Pure, 100 percent vinylester resin used for skin coats. This exemption does not apply to blends of vinylester and polyester resins used for skin coats. The total resin materials included in the exemption cannot exceed 5 percent by weight of all resin used at your facility on a 12-month rolling-average basis. You must keep a record of the amount of 100 percent vinylester skin coat resin used per month that is eligible for this exemption and copies of calculations showing that the exempt amount does not exceed 5 percent of all resin used.

§ 63.5701 What are my options for complying with the open molding emission limit?

You must use one or more of the options listed in paragraphs (a) through (c) of this section to meet the emission limit in § 63.5698 for the resins and gel coats used in open molding operations at your facility.

(a) *Maximum achievable control technology (MACT) model point value averaging (emissions averaging) option.*

(1) Demonstrate that emissions from the open molding resin and gel coat operations that you average meet the emission limit in § 63.5698 using the procedures described in § 63.5710. Compliance with this option is based on a 12-month rolling average.

(2) Those operations and materials not included in the emissions average must comply with either paragraph (b) or (c) of this section.

(b) *Compliant materials option.* Demonstrate compliance by using resins and gel coats that meet the organic HAP content requirements in Table 2 to this subpart. Compliance with this option is based on a 12-month rolling average.

(c) *Add-on control option.* Use an enclosure and add-on control device, and demonstrate that the resulting emissions meet the emission limit in § 63.5698. Compliance with this option is based on control device performance testing and control device monitoring.

§ 63.5704 What are the general requirements for complying with the open molding emission limit?

(a) *Emissions averaging option.* For those open molding operations and materials complying using the emissions averaging option, you must demonstrate compliance by performing the steps in paragraphs (a)(1) through (5) of this section.

(1) Use the methods specified in § 63.5758 to determine the organic HAP content of resins and gel coats.

(2) Complete the calculations described in § 63.5710 to show that the organic HAP emissions do not exceed the limit specified in § 63.5698.

(3) Keep records as specified in paragraphs (a)(3)(i) through (iv) of this section for each resin and gel coat.

(i) Hazardous air pollutant content.

(ii) Amount of material used per month.

(iii) Application method used for production resin and tooling resin. This record is not required if all production resins and tooling resins are applied with nonatomized technology.

(iv) Calculations performed to demonstrate compliance based on MACT model point values, as described in § 63.5710.

(4) Prepare and submit the implementation plan described in § 63.5707 to the Administrator and keep it up to date.

(5) Submit semiannual compliance reports to the Administrator as specified in § 63.5764.

(b) *Compliant materials option.* For each open molding operation complying using the compliant materials option, you must demonstrate compliance by performing the steps in paragraphs (b)(1) through (4) of this section.

(1) Use the methods specified in § 63.5758 to determine the organic HAP content of resins and gel coats.

(2) Complete the calculations described in § 63.5713 to show that the weighted-average organic HAP content does not exceed the limit specified in Table 2 to this subpart.

(3) Keep records as specified in paragraphs (b)(3)(i) through (iv) of this section for each resin and gel coat.

(i) Hazardous air pollutant content.

(ii) Application method for production resin and tooling resin. This

record is not required if all production resins and tooling resins are applied with nonatomized technology.

(iii) Amount of material used per month. This record is not required for an operation if all materials used for that operation comply with the organic HAP content requirements.

(iv) Calculations performed, if required, to demonstrate compliance based on weighted-average organic HAP content as described in § 63.5713.

(4) Submit semiannual compliance reports to the Administrator as specified in § 63.5764.

(c) *Add-on control option*. If you are using an add-on control device, you must demonstrate compliance by performing the steps in paragraphs (c)(1) through (5) of this section.

(1) Conduct a performance test of the control device as specified in §§ 63.5719 and 63.5722 to demonstrate initial compliance.

(2) Use the performance test results to determine control device parameters to monitor after the performance test as specified in § 63.5725.

(3) Comply with the operating limits specified in § 63.5715 and the control device and emission capture system monitoring requirements specified in § 63.5725 to demonstrate continuous compliance.

(4) Keep the records specified in § 63.5767.

(5) Submit to the Administrator the notifications and reports specified in §§ 63.5761 and 63.5764.

§ 63.5707 What is an implementation plan for open molding operations and when do I need to prepare one?

(a) You must prepare an implementation plan for all open molding operations for which you comply by using the emissions averaging option described in § 63.5704(a).

(b) The implementation plan must describe the steps you will take to bring the open molding operations covered by this subpart into compliance. For each operation included in the emissions average, your implementation plan must include the elements listed in paragraphs (b)(1) through (3) of this section.

(1) A description of each operation included in the average.

(2) The maximum organic HAP content of the materials used, the application method used (if any atomized resin application methods are used in the average), and any other methods used to control emissions.

(3) Calculations showing that the operations covered by the plan will comply with the open molding emission limit specified in § 63.5698.

(c) You must submit the implementation plan to the Administrator with the notification of compliance status specified in § 63.5761.

(d) You must keep the implementation plan on site and provide it to the Administrator when asked.

(e) If you revise the implementation plan, you must submit the revised plan with your next semiannual compliance report specified in § 63.5764.

§ 63.5710 How do I demonstrate compliance using emissions averaging?

(a) Compliance using the emissions averaging option is demonstrated on a 12-month rolling-average basis and is determined at the end of every month (12 times per year). The first 12-month rolling-average period begins on the compliance date specified in § 63.5695.

(b) At the end of the twelfth month after your compliance date and at the end of every subsequent month, use equation 1 of this section to demonstrate that the organic HAP emissions from those operations included in the average do not exceed the emission limit in § 63.5698 calculated for the same 12-month period. (Include terms in equation 1 of § 63.5698 and equation 1 of this section for only those operations and materials included in the average.)

$$\text{HAP emissions} = \left[(PV_R)(M_R) + (PV_{PG})(M_{PG}) + (PV_{CG})(M_{CG}) + (PV_{TR})(M_{TR}) + (PV_{TG})(M_{TG})\right] \qquad \text{(Eq. 1)}$$

Where:

HAP emissions= Organic HAP emissions calculated using MACT model point values for each operation included in the average, kilograms.

PV_R= Weighted-average MACT model point value for production resin used in the past 12 months, kilograms per megagram.

M_R= Mass of production resin used in the past 12 months, megagrams.

PV_{PG}= Weighted-average MACT model point value for pigmented gel coat used in the past 12 months, kilograms per megagram.

M_{PG}= Mass of pigmented gel coat used in the past 12 months, megagrams.

PV_{CG}= Weighted-average MACT model point value for clear gel coat used in the past 12 months, kilograms per megagram.

M_{CG}= Mass of clear gel coat used in the past 12 months, megagrams.

PV_{TR}= Weighted-average MACT model point value for tooling resin used in the past 12 months, kilograms per megagram.

M_{TR}= Mass of tooling resin used in the past 12 months, megagrams.

PV_{TG}= Weighted-average MACT model point value for tooling gel coat used in the past 12 months, kilograms per megagram.

M_{TG}= Mass of tooling gel coat used in the past 12 months, megagrams.

(c) At the end of every month, use equation 2 of this section to compute the weighted-average MACT model point value for each open molding resin and gel coat operation included in the average.

$$PV_{OP} = \frac{\sum_{i=1}^{n}(M_i\ PV_i)}{\sum_{i=1}^{n}(M_i)} \qquad \text{(Eq. 2)}$$

Where:

PV_{OP}=weighted-average MACT model point value for each open molding operation (PV_R, PV_{PG}, PV_{CG}, PV_{TR}, and PV_{TG}) included in the average, kilograms of HAP per megagram of material applied.

M_i=mass of resin or gel coat i used within an operation in the past 12 months, megagrams.

n=number of different open molding resins and gel coats used within an operation in the past 12 months.

PV_i=the MACT model point value for resin or gel coat i used within an operation in the past 12 months, kilograms of HAP per megagram of material applied.

(d) You must use the equations in Table 3 to this subpart to calculate the MACT model point value (PV_i) for each resin and gel coat used in each operation in the past 12 months.

(e) If the organic HAP emissions, as calculated in paragraph (b) of this section, are less than the organic HAP limit calculated in §63.5698(b) for the same 12-month period, then you are in compliance with the emission limit in §63.5698 for those operations and materials included in the average.

[66 FR 44232, Aug. 22, 2001; 66 FR 50504, Oct. 3, 2001]

§63.5713 How do I demonstrate compliance using compliant materials?

(a) Compliance using the organic HAP content requirements listed in Table 2 to this subpart is based on a 12-month rolling average that is calculated at the end of every month. The first 12-month rolling-average period begins on the compliance date specified in §63.5695. If you are using filled material (production resin or tooling resin), you must comply according to the procedure described in §63.5714.

(b) At the end of the twelfth month after your compliance date and at the end of every subsequent month, review the organic HAP contents of the resins and gel coats used in the past 12 months in each operation. If all resins and gel coats used in an operation have organic HAP contents no greater than the applicable organic HAP content limits in Table 2 to this subpart, then you are in compliance with the emission limit specified in §63.5698 for that 12-month period for that operation. In addition, you do not need to complete the weighted-average organic HAP content calculation contained in paragraph (c) of this section for that operation.

(c) At the end of every month, you must use equation 1 of this section to calculate the weighted-average organic HAP content for all resins and gel

coats used in each operation in the past 12 months.

$$\text{Weighted-Average HAP Content (\%)} = \frac{\sum_{i=1}^{n}(M_i\ HAP_i)}{\sum_{i=1}^{n}(M_i)} \qquad \text{(Eq. 1)}$$

Where:

M_i = mass of open molding resin or gel coat i used in the past 12 months in an operation, megagrams.

HAP_i = Organic HAP content, by weight percent, of open molding resin or gel coat i used in the past 12 months in an operation. Use the methods in § 63.5758 to determine organic HAP content.

n = number of different open molding resins or gel coats used in the past 12 months in an operation.

(d) If the weighted-average organic HAP content does not exceed the applicable organic HAP content limit specified in Table 2 to this subpart, then you are in compliance with the emission limit specified in § 63.5698.

§ 63.5714 How do I demonstrate compliance if I use filled resins?

(a) If you are using a filled production resin or filled tooling resin, you must demonstrate compliance for the filled material on an as-applied basis using equation 1 of this section.

$$PV_F = PV_u \times \frac{(100 - \%\ \text{Filler})}{100} \qquad \text{(Eq. 1)}$$

Where:

PV_F = The as-applied MACT model point value for a filled production resin or tooling resin, kilograms organic HAP per megagram of filled material.

PV_u = The MACT model point value for the neat (unfilled) resin, before filler is added, as calculated using the formulas in Table 3 to this subpart.

% Filler =The weight-percent of filler in the as-applied filled resin system.

(b) If the filled resin is used as a production resin and the value of PV_F calculated by equation 1 of this section does not exceed 46 kilograms of organic HAP per megagram of filled resin applied, then the filled resin is in compliance.

(c) If the filled resin is used as a tooling resin and the value of PV_F calculated by equation 1 of this section does not exceed 54 kilograms of organic HAP per megagram of filled resin applied, then the filled resin is in compliance.

(d) If you are including a filled resin in the emissions averaging procedure described in § 63.5710, then use the value of PV_F calculated using equation 1 of this section for the value of PV i in equation 2 of § 63.5710.

Demonstrating Compliance for Open Molding Operations Controlled by Add-On Control Devices

§ 63.5715 What operating limits must I meet?

(a) For open molding operations on which you use a thermal oxidizer as an add-on control device, you must meet the operating limits specified in Table 4 to this subpart that apply to the emission capture system and thermal oxidizer. You must establish the operating limits during the performance test according to the procedures in § 63.5725. You must meet the operating limits at all times after you establish them.

(b) If you use an add-on control device other than a thermal oxidizer, or wish to monitor an alternative parameter and comply with a different operating limit, you must apply to the Administrator for approval of alternative monitoring under § 63.8(f).

§63.5716 When must I conduct a performance test?

(a) If your source is an existing source, you must complete the add-on control device performance test no later than the compliance date specified in §63.5695.

(b) If your source is a new source, you must complete the add-on control device performance test no later than 180 days after the compliance date specified in §63.5695.

(c) You must conduct a performance test every 5 years as part of renewing your 40 CFR part 70 or 71 operating permit.

§63.5719 How do I conduct a performance test?

(a) You must capture the emissions using a permanent enclosure (such as a spray booth or similar containment device) and direct the captured emissions to the add-on control device.

(b) You must measure emissions as specified in paragraph (b)(1) or (2) of this section.

(1) If the enclosure vented to the control device is a permanent total enclosure as defined in Method 204 of appendix M to 40 CFR part 51, then you may measure emissions only at the outlet of the control device.

(2) If the permanent enclosure vented to the control device is not a total enclosure, you must build a temporary total enclosure, as defined in Method 204 of appendix M to 40 CFR part 51, around the permanent enclosure. You must then simultaneously measure emissions from the control device outlet and the emissions from the temporary total enclosure outlet. You determine compliance from the combined emissions from the control device outlet and the temporary total enclosure outlet.

(c) You must conduct the control device performance test using the emission measurement methods specified in paragraphs (c)(1) through (4) of this section.

(1) Use either Method 1 or 1A of appendix A to 40 CFR part 60, as appropriate, to select the sampling sites.

(2) Use Method 2, 2A, 2C, 2D, 2F or 2G of appendix A to 40 CFR part 60, as appropriate, to measure gas volumetric flow rate.

(3) Use Method 18 of appendix A to 40 CFR part 60 to measure organic HAP emissions or use Method 25A of appendix A to 40 CFR part 60 to measure total gaseous organic emissions as a surrogate for total organic HAP emissions. If you use Method 25A, you must assume that all gaseous organic emissions measured as carbon are organic HAP emissions. If you use Method 18 and the number of organic HAP in the exhaust stream exceeds five, you must take into account the use of multiple chromatographic columns and analytical techniques to get an accurate measure of at least 90 percent of the total organic HAP mass emissions. Do not use Method 18 to measure organic HAP emissions from a combustion device; use instead Method 25A and assume that all gaseous organic mass emissions measured as carbon are organic HAP emissions.

(4) You may use American Society for Testing and Materials (ASTM) D6420–99 (available for purchase from at least one of the following addresses: 100 Barr Harbor Drive, West Conshohocken, PA 19428–2959; or University Microfilms International, 300 North Zeeb Road, Ann Arbor, MI 48106.) in lieu of Method 18 of 40 CFR part 60, appendix A, under the conditions specified in paragraphs (c)(4)(i) through (iii) of this section.

(i) If the target compound(s) is listed in Section 1.1 of ASTM D6420–99 and the target concentration is between 150 parts per billion by volume and 100 parts per million by volume.

(ii) If the target compound(s) is not listed in Section 1.1 of ASTM D6420–99, but is potentially detected by mass spectrometry, an additional system continuing calibration check after each run, as detailed in Section 10.5.3 of ASTM D6420–99, must be followed, met, documented, and submitted with the performance test report even if you do not use a moisture condenser or the compound is not considered soluble.

(iii) If a minimum of one sample/analysis cycle is completed at least every 15 minutes.

(d) The control device performance test must consist of three runs and each run must last at least 1 hour. The production conditions during the test runs must represent normal production

conditions with respect to the types of parts being made and material application methods. The production conditions during the test must also represent maximum potential emissions with respect to the organic HAP content of the materials being applied and the material application rates.

(e) During the test, you must also monitor and record separately the amounts of production resin, tooling resin, pigmented gel coat, clear gel coat, and tooling gel coat applied inside the enclosure that is vented to the control device.

§ 63.5722 How do I use the performance test data to demonstrate initial compliance?

Demonstrate initial compliance with the open molding emission limit as described in paragraphs (a) through (c) of this section:

(a) Calculate the organic HAP limit you must achieve using equation 1 of § 63.5698. For determining initial compliance, the organic HAP limit is based on the amount of material used during the performance test, in megagrams, rather than during the past 12 months. Calculate the limit using the megagrams of resin and gel coat applied inside the enclosure during the three runs of the performance test and equation 1 of § 63.5698.

(b) Add the total measured emissions, in kilograms, from all three of the 1-hour runs of the performance test.

(c) If the total emissions from the three 1-hour runs of the performance test are less than the organic HAP limit calculated in paragraph (a) of this section, then you have demonstrated initial compliance with the emission limit in § 63.5698 for those operations performed in the enclosure and controlled by the add-on control device.

§ 63.5725 What are the requirements for monitoring and demonstrating continuous compliance?

(a) You must establish control device parameters that indicate proper operation of the control device.

(b) You must install, operate, and maintain a continuous parameter monitoring system as specified in paragraphs (b)(1) through (8) of this section.

(1) The continuous parameter monitoring system must complete a minimum of one cycle of operation for each successive 15-minute period. You must have a minimum of four successive cycles of operation to have a valid hour of data.

(2) You must have valid data from at least 90 percent of the hours during which the process operated.

(3) You must determine the average of all recorded readings for each successive 3-hour period of the emission capture system and add-on control device operation.

(4) You must maintain the continuous parameter monitoring system at all times and have available necessary parts for routine repairs of the monitoring equipment.

(5) You must operate the continuous parameter monitoring system and collect emission capture system and add-on control device parameter data at all times that a controlled open molding operation is being performed, except during monitoring malfunctions, associated repairs, and required quality assurance or control activities (including, if applicable, calibration checks and required zero and span adjustments).

(6) You must not use emission capture system or add-on control device parameter data recorded during monitoring malfunctions, associated repairs, out-of-control periods, or required quality assurance or control activities when calculating data averages. You must use all the data collected during all other periods in calculating the data averages for determining compliance with the emission capture system and add-on control device operating limits.

(7) You must record the results of each inspection, calibration, and validation check.

(8) Any period for which the monitoring system is out-of-control, as defined in § 63.7(d)(7), or malfunctioning, and data are not available for required calculations is a deviation from the monitoring requirements. A monitoring malfunction is any sudden, infrequent, not reasonably preventable failure of the continuous parameter monitoring system to provide valid data. Monitoring failures that are

caused in part by poor maintenance or careless operation are not malfunctions.

(c) *Enclosure bypass line.* You must meet the requirements of paragraphs (c)(1) and (2) of this section for each emission capture system enclosure that contains bypass lines that could divert emissions away from the add-on control device to the atmosphere.

(1) You must monitor or secure the valve or closure mechanism controlling the bypass line in a nondiverting position in such a way that the valve or closure mechanism cannot be opened without creating a record that the valve was opened. The method used to monitor or secure the valve or closure mechanism must meet one of the requirements specified in paragraphs (c)(1)(i) through (iv) of this section.

(i) *Flow control position indicator.* Install, calibrate, maintain, and operate according to the manufacturer's specifications a flow control position indicator that takes a reading at least once every 15 minutes and provides a record indicating whether the emissions are directed to the add-on control device or diverted from the add-on control device. The time of occurrence and flow control position must be recorded, as well as every time the flow direction is changed. The flow control position indicator must be installed at the entrance to any bypass line that could divert the emissions away from the add-on control device to the atmosphere.

(ii) *Car-seal or lock-and-key valve closures.* Secure any bypass line valve in the closed position with a car-seal or a lock-and-key type configuration. You must visually inspect the seal or closure mechanism at least once every month to ensure that the valve is maintained in the closed position, and the emissions are not diverted away from the add-on control device to the atmosphere.

(iii) *Valve closure continuous monitoring.* Ensure that any bypass line valve is in the closed (non-diverting) position through monitoring of valve position at least once every 15 minutes. You must inspect the monitoring system at least once every month to verify that the monitor will indicate valve position.

(iv) *Automatic shutdown system.* Use an automatic shutdown system in which the open molding operation is stopped when flow is diverted by the bypass line away from the add-on control device to the atmosphere when the open molding operation is running. You must inspect the automatic shutdown system at least once every month to verify that it will detect diversions of flow and shut down the open molding operation.

(2) If any bypass line is opened, you must include a description of why the bypass line was opened and the length of time it remained open in the semiannual compliance reports required in § 63.5764(d).

(d) *Thermal oxidizers.* If you are using a thermal oxidizer or incinerator as an add-on control device, you must comply with the requirements in paragraphs (d)(1) through (6) of this section.

(1) You must install a combustion temperature monitoring device in the firebox of the thermal oxidizer or incinerator, or in the duct immediately downstream of the firebox before any substantial heat exchange occurs. You must meet the requirements in paragraphs (b) and (d)(1)(i) through (vii) of this section for each temperature monitoring device.

(i) Locate the temperature sensor in a position that provides a representative temperature.

(ii) Use a temperature sensor with a minimum tolerance of 2.2 °C or 0.75 percent of the temperature value, whichever is larger.

(iii) Shield the temperature sensor system from electromagnetic interference and chemical contaminants.

(iv) If a chart recorder is used, it must have a sensitivity in the minor division of at least 10 °C.

(v) Perform an electronic calibration at least semiannually according to the procedures in the manufacturer's owners manual. Following the electronic calibration, you must conduct a temperature sensor validation check in which a second or redundant temperature sensor placed nearby the process temperature sensor must yield a reading within 16.7 °C of the process temperature sensor's reading.

(vi) Conduct calibration and validation checks any time the sensor exceeds the manufacturer's specified maximum operating temperature range or install a new temperature sensor.

(vii) At least monthly, inspect all components for integrity and all electrical connections for continuity, oxidation, and galvanic corrosion.

(2) Before or during the performance test, you must conduct a performance evaluation of the combustion temperature monitoring system according to § 63.8(e). Section 63.8(e) specifies the general requirements for continuous monitoring systems and requirements for notifications, the site-specific performance evaluation plan, conduct of the performance evaluation, and reporting of performance evaluation results.

(3) During the performance test required by § 63.5716, you must monitor and record the combustion temperature and determine the average combustion temperature for the three 1-hour test runs. This average temperature is the minimum operating limit for the thermal oxidizer.

(4) Following the performance test, you must continuously monitor the combustion temperature and record the average combustion temperature no less frequently than every 15 minutes.

(5) You must operate the incinerator or thermal oxidizer so that the average combustion temperature in any 3-hour period does not fall below the average combustion temperature recorded during the performance test.

(6) If the average combustion temperature in any 3-hour period falls below the average combustion temperature recorded during the performance test, or if you fail to collect the minimum data specified in paragraph (d)(4) of this section, it is a deviation for the operating limit in § 63.5715.

(e) *Other control devices.* If you are using a control device other a thermal oxidizer, then you must comply with alternative monitoring requirements and operating limits approved by the Administrator under § 63.8(f).

(f) *Emission capture system.* For each enclosure in the emission capture system, you must comply with the requirements in paragraphs (f)(1) through (5) of this section.

(1) You must install a device to measure and record either the flow rate or the static pressure in the duct from each enclosure to the add-on control device.

(2) You must install a device to measure and record the pressure drop across at least one opening in each enclosure.

(3) Each flow measurement device must meet the requirements in paragraphs (b) and (f)(3)(i) through (iv) of this section.

(i) Locate the flow sensor in a position that provides a representative flow measurement in the duct between each enclosure in the emission capture system and the add-on control device.

(ii) Reduce swirling flow or abnormal velocity distributions due to upstream and downstream disturbances.

(iii) Conduct a flow sensor calibration check at least semiannually.

(iv) At least monthly, inspect all components for integrity, all electrical connections for continuity, and all mechanical connections for leakage.

(4) For each pressure measurement device, you must comply with the requirements in paragraphs (a) and (f)(4)(i) through (vii) of this section.

(i) Locate each pressure drop sensor in or as close to a position that provides a representative measurement of the pressure drop across each enclosure opening you are monitoring.

(ii) Locate each duct static pressure sensor in a position that provides a representative measurement of the static pressure in the duct between the enclosure and control device.

(iii) Minimize or eliminate pulsating pressure, vibration, and internal and external corrosion.

(iv) Check the pressure tap for plugging daily.

(v) Use an inclined manometer with a measurement sensitivity of 0.0004 millimeters mercury (mmHg) to check gauge calibration quarterly and transducer calibration monthly.

(vi) Conduct calibration checks any time the sensor exceeds the manufacturer's specified maximum operating pressure range or install a new pressure sensor.

(vii) At least monthly, inspect all components for integrity, all electrical

connections for continuity, and all mechanical connections for leakage.

(5) For each capture device that is not part of a permanent total enclosure as defined in Method 204 in appendix M to 40 CFR part 51, you must establish an operating limit for either the gas volumetric flow rate or duct static pressure, as specified in paragraphs (f)(5)(i) and (ii) of this section. You must also establish an operating limit for pressure drop across at least one opening in each enclosure according to paragraphs (f)(5)(iii) and (iv) of this section. The operating limits for a permanent total enclosure are specified in Table 4 to this subpart.

(i) During the emission test required by §63.5716 and described in §63.5719, you must monitor and record either the gas volumetric flow rate or the duct static pressure for each separate enclosure in your emission capture system at least once every 15 minutes during each of the three test runs at a point in the duct between the enclosure and the add-on control device inlet.

(ii) Following the emission test, calculate and record the average gas volumetric flow rate or duct static pressure for the three test runs for each enclosure. This average gas volumetric flow rate or duct static pressure is the minimum operating limit for that specific enclosure.

(iii) During the emission test required by §63.5716 and described in §63.5719, you must monitor and record the pressure drop across the opening of each enclosure in your emission capture system at least once every 15 minutes during each of the three test runs.

(iv) Following the emission test, calculate and record the average pressure drop for the three test runs for each enclosure. This average pressure drop is the minimum operating limit for that specific enclosure.

STANDARDS FOR CLOSED MOLDING RESIN OPERATIONS

§63.5728 What standards must I meet for closed molding resin operations?

(a) If a resin application operation meets the definition of closed molding specified in §63.5779, there is no requirement to reduce emissions from that operation.

(b) If the resin application operation does not meet the definition of closed molding, then you must comply with the limit for open molding resin operations specified in §63.5698.

(c) Open molding resin operations that precede a closed molding operation must comply with the limit for open molding resin and gel coat operations specified in §63.5698. Examples of these operations include gel coat or skin coat layers that are applied before lamination is performed by closed molding.

STANDARDS FOR RESIN AND GEL COAT MIXING OPERATIONS

§63.5731 What standards must I meet for resin and gel coat mixing operations?

(a) All resin and gel coat mixing containers with a capacity equal to or greater than 208 liters, including those used for on-site mixing of putties and polyputties, must have a cover with no visible gaps in place at all times.

(b) The work practice standard in paragraph (a) of this section does not apply when material is being manually added to or removed from a container, or when mixing or pumping equipment is being placed in or removed from a container.

(c) To demonstrate compliance with the work practice standard in paragraph (a) of this section, you must visually inspect all mixing containers subject to this standard at least once per month. The inspection should ensure that all containers have covers with no visible gaps between the cover and the container, or between the cover and equipment passing through the cover.

(d) You must keep records of which mixing containers are subject to this standard and the results of the inspections, including a description of any repairs or corrective actions taken.

STANDARDS FOR RESIN AND GEL COAT APPLICATION EQUIPMENT CLEANING OPERATIONS

§63.5734 What standards must I meet for resin and gel coat application equipment cleaning operations?

(a) For routine flushing of resin and gel coat application equipment (e.g.,

spray guns, flowcoaters, brushes, rollers, and squeegees), you must use a cleaning solvent that contains no more than 5 percent organic HAP by weight. For removing cured resin or gel coat from application equipment, no organic HAP content limit applies.

(b) You must store organic HAP-containing solvents used for removing cured resin or gel coat in containers with covers. The covers must have no visible gaps and must be in place at all times, except when equipment to be cleaned is placed in or removed from the container. On containers with a capacity greater than 7.6 liters, the distance from the top of the container to the solvent surface must be no less than 0.75 times the diameter of the container. Containers that store organic HAP-containing solvents used for removing cured resin or gel coat are exempt from the requirements of 40 CFR part 63, subpart T. Cured resin or gel coat means resin or gel coat that has changed from a liquid to a solid.

§ 63.5737 How do I demonstrate compliance with the resin and gel coat application equipment cleaning standards?

(a) Determine and record the organic HAP content of the cleaning solvents subject to the standards specified in § 63.5734 using the methods specified in § 63.5758.

(b) If you recycle cleaning solvents on site, you may use documentation from the solvent manufacturer or supplier or a measurement of the organic HAP content of the cleaning solvent as originally obtained from the solvent supplier for demonstrating compliance, subject to the conditions in § 63.5758 for demonstrating compliance with organic HAP content limits.

(c) At least once per month, you must visually inspect any containers holding organic HAP-containing solvents used for removing cured resin and gel coat to ensure that the containers have covers with no visible gaps. Keep records of the monthly inspections and any repairs made to the covers.

STANDARDS FOR CARPET AND FABRIC ADHESIVE OPERATIONS

§ 63.5740 What emission limit must I meet for carpet and fabric adhesive operations?

(a) You must use carpet and fabric adhesives that contain no more than 5 percent organic HAP by weight.

(b) To demonstrate compliance with the emission limit in paragraph (a) of this section, you must determine and record the organic HAP content of the carpet and fabric adhesives using the methods in § 63.5758.

STANDARDS FOR ALUMINUM RECREATIONAL BOAT SURFACE COATING OPERATIONS

§ 63.5743 What standards must I meet for aluminum recreational boat surface coating operations?

(a) For aluminum wipedown solvent operations and aluminum surface coating operations, you must comply with either the separate emission limits in paragraphs (a)(1) and (2) of this section, or the combined emission limit in paragraph (a)(3) of this section. Compliance with these limitations is based on a 12-month rolling average that is calculated at the end of every month.

(1) You must limit emissions from aluminum wipedown solvents to no more than 0.33 kilograms of organic HAP per liter of total coating solids applied from aluminum primers, clear coats, and top coats combined. No limit applies when cleaning surfaces are receiving decals or adhesive graphics.

(2) You must limit emissions from aluminum recreational boat surface coatings (including thinners, activators, primers, topcoats, and clear coats) to no more than 1.22 kilograms of organic HAP per liter of total coating solids applied from aluminum primers, clear coats, and top coats combined.

(3) You must limit emissions from the combined aluminum surface coatings and aluminum wipedown solvents to no more than 1.55 kilograms of organic HAP per liter of total coating solids applied from aluminum primers, clear coats, and top coats combined.

(b) You must comply with the work practice standard in paragraph (b)(1), (2), (3), or (4) of this section when cleaning aluminum coating spray guns with solvents containing more than 5 percent organic HAP by weight.

(1) Clean spray guns in an enclosed device. Keep the device closed except when you place spray guns in or remove them from the device.

(2) Disassemble the spray gun and manually clean the components in a vat. Keep the vat closed when you are not using it.

(3) Clean spray guns by placing solvent in the pressure pot and forcing the solvent through the gun. Do not use atomizing air during this procedure. Direct the used cleaning solvent from the spray gun into a container that you keep closed when you are not using it.

(4) An alternative gun cleaning process or technology approved by the Administrator according to the procedures in § 63.6(g).

§ 63.5746 How do I demonstrate compliance with the emission limits for aluminum wipedown solvents and aluminum coatings?

To demonstrate compliance with the emission limits for aluminum wipedown solvents and aluminum coatings specified in § 63.5743(a), you must meet the requirements of paragraphs (a) through (f) of this section.

(a) Determine and record the organic HAP content (kilograms of organic HAP per kilogram of material, or weight fraction) of each aluminum wipedown solvent and aluminum coating (including primers, topcoats, clear coats, thinners, and activators). Use the methods in § 63.5758 to determine organic HAP content.

(b) Use the methods in § 63.5758(b) to determine the solids content (liters of solids per liter of coating, or volume fraction) of each aluminum surface coating, including primers, topcoats, and clear coats. Keep records of the solids content.

(c) Use the methods in § 63.5758(c) to determine the density of each aluminum surface coating and wipedown solvent.

(d) Compliance is based on a 12-month rolling average calculated at the end of every month. The first 12-month rolling-average period begins on the compliance date specified in § 63.5695.

(e) At the end of the twelfth month after your compliance date and at the end of every subsequent month, use the procedures in § 63.5749 to calculate the organic HAP from aluminum wipedown solvents per liter of coating solids, and use the procedures in § 63.5752 to calculate the kilograms of organic HAP from aluminum coatings per liter of coating solids.

(f) Keep records of the calculations used to determine compliance.

(g) *Approval of alternative means of demonstrating compliance.* You may apply to the Administrator for permission to use an alternative means (such as an add-on control system) of limiting emissions from aluminum wipedown solvent and coating operations and demonstrating compliance with the emission limits in § 63.5743(a).

(1) The application must include the information listed in paragraphs (g)(1)(i) through (iii) of this section.

(i) An engineering evaluation that compares the emissions using the alternative means to the emissions that would result from using the strategy specified in paragraphs (a) through (e) of this section. The engineering evaluation may include the results from an emission test that accurately measures the capture efficiency and control device efficiency achieved by the control system and the composition of the associated coatings so that the emissions comparison can be made.

(ii) A proposed monitoring protocol that includes operating parameter values to be monitored for compliance and an explanation of how the operating parameter values will be established through a performance test.

(iii) Details of appropriate recordkeeping and reporting procedures.

(2) The Administrator will approve the alternative means of limiting emissions if the Administrator determines that HAP emissions will be no greater than if the source uses the procedures described in paragraphs (a) through (e) of this section to demonstrate compliance.

(3) The Administrator's approval may specify operation, maintenance, and monitoring requirements to ensure

that emissions from the regulated operations are no greater than those that would otherwise result from regulated operations in compliance with this subpart.

§ 63.5749 How do I calculate the organic HAP content of aluminum wipedown solvents?

(a) Use equation 1 of this section to calculate the weighted-average organic HAP content of aluminum wipedown solvents used in the past 12 months.

$$HAP_{WD} = \frac{\sum_{j=1}^{n}(Vol_j)(D_j)(W_j)}{\sum_{i=1}^{m}(Vol_i)(Solids_i)} \quad \text{(Eq. 1)}$$

Where:

HAP_{WD}= weighted-average organic HAP content of aluminum wipedown solvents, kilograms of HAP per liter of total coating solids from aluminum primers, top coats, and clear coats.

n = number of different wipedown solvents used in the past 12 months.

Vol_j= volume of aluminum wipedown solvent j used in the past 12 months, liters.

D_j= density of aluminum wipedown solvent j, kilograms per liter.

W_j= mass fraction of organic HAP in aluminum wipedown solvent j.

m = number of different aluminum surface coatings (primers, top coats, and clear coats) used in the past 12 months.

Vol_i = volume of aluminum primer, top coat, or clear coat i used in the past 12 months, liters.

$Solids_i$= solids content aluminum primer, top coat, or clear coat i, liter solids per liter of coating.

(b) Compliance is based on a 12-month rolling average. If the weighted-average organic HAP content does not exceed 0.33 kilograms of organic HAP per liter of total coating solids, then you are in compliance with the emission limit specified in § 63.5743(a)(1).

§ 63.5752 How do I calculate the organic HAP content of aluminum recreational boat surface coatings?

(a) Use equation 1 of this section to calculate the weighted-average HAP content for all aluminum surface coatings used in the past 12 months.

$$HAP_{SC} = \frac{\sum_{i=1}^{m}(Vol_i)(D_i)(W_i) + \sum_{k=1}^{D}(Vol_k)(D_k)(W_k)}{\sum_{i=1}^{m}(Vol_i)(Solids_i)} \quad \text{(Eq. 1)}$$

Where:

HAP_{SC} = weighted-average organic HAP content for all aluminum coating materials, kilograms of organic HAP per liter of coating solids.

m = number of different aluminum primers, top coats, and clear coats used in the past 12 months.

Vol_i = volume of aluminum primer, top coat, or clear coat i used in the past 12 months, liters.

D_i= density of coating i, kilograms per liter.

W_i= mass fraction of organic HAP in coating i, kilograms of organic HAP per kilogram of coating.

p = number of different thinners, activators, and other coating additives used in the past 12 months.

Vol_k= total volume of thinner, activator, or additive k used in the past 12 months, liters.

D_k= density of thinner, activator, or additive k, kilograms per liter.

W_k= mass fraction of organic HAP in thinner, activator, or additive k, kilograms of organic HAP per kilogram of thinner or activator.

$Solids_i$ = solids content of aluminum primer, top coat, or clear coat i, liter solids per liter of coating.

(b) Compliance is based on a 12-month rolling average. If the weighted-average organic HAP content does not exceed 1.22 kilograms of organic HAP per liter of coating solids, then you are in compliance with the emission limit specified in §63.5743(a)(2).

§63.5753 How do I calculate the combined organic HAP content of aluminum wipedown solvents and aluminum recreational boat surface coatings?

(a) Use equation 1 of this section to calculate the combined weighted-average organic HAP content of aluminum wipedown solvents and aluminum recreational boat surface coatings.

$$HAP_{Combined} = HAP_{WD} + HAP_{SC} \qquad \text{(Eq. 1)}$$

Where:

HAP_{WD} = the weighted-average organic HAP content of aluminum wipedown solvents used in the past 12 months, calculated using equation 1 of §63.5749.

HAP_{SC} = the weighted average organic HAP content of aluminum recreational boat surface coatings used in the past 12 months, calculated using equation 1 of §63.5752.

(b) Compliance is based on a 12-month rolling average. If the combined organic HAP content does not exceed 1.55 kilograms of organic HAP per liter of total coating solids, then you are in compliance with the emission limit specified in §63.5743(a)(3).

§63.5755 How do I demonstrate compliance with the aluminum recreational boat surface coating spray gun cleaning work practice standards?

You must demonstrate compliance with the aluminum coating spray gun cleaning work practice standards by meeting the requirements of paragraph (a) or (b) of this section.

(a) Demonstrate that solvents used to clean the aluminum coating spray guns contain no more than 5 percent organic HAP by weight by determining organic HAP content with the methods in §63.5758. Keep records of the organic HAP content determination.

(b) For solvents containing more than 5 percent organic HAP by weight, comply with the requirements in paragraph (b)(1) or (b)(2), and paragraph (b)(3) of this section.

(1) If you are using an enclosed spray gun cleaner, visually inspect it at least once per month to ensure that covers are in place and the covers have no visible gaps when the cleaner is not in use, and that there are no leaks from hoses or fittings.

(2) If you are manually cleaning the gun or spraying solvent into a container that can be closed, visually inspect all solvent containers at least once per month to ensure that the containers have covers and the covers fit with no visible gaps.

(3) Keep records of the monthly inspections and any repairs that are made to the enclosed gun cleaners or the covers.

METHODS FOR DETERMINING HAZARDOUS AIR POLLUTANT CONTENT

§63.5758 How do I determine the organic HAP content of materials?

(a) *Determine the organic HAP content for each material used.* To determine the organic HAP content for each material used in your open molding resin and gel coat operations, carpet and fabric adhesive operations, or aluminum recreational boat surface coating operations, you must use one of the options in paragraphs (a)(1) through (6) of this section.

(1) *Method 311 (appendix A to 40 CFR part 63).* You may use Method 311 for determining the mass fraction of organic HAP. Use the procedures specified in paragraphs (a)(1)(i) and (ii) of this section when determining organic HAP content by Method 311.

(i) Include in the organic HAP total each organic HAP that is measured to be present at 0.1 percent by mass or more for Occupational Safety and

Health Administration (OSHA)-defined carcinogens as specified in 29 CFR 1910.1200(d)(4) and at 1.0 percent by mass or more for other compounds. For example, if toluene (not an OSHA carcinogen) is measured to be 0.5 percent of the material by mass, you do not need to include it in the organic HAP total. Express the mass fraction of each organic HAP you measure as a value truncated to four places after the decimal point (for example, 0.1234).

(ii) Calculate the total organic HAP content in the test material by adding up the individual organic HAP contents and truncating the result to three places after the decimal point (for example, 0.123).

(2) *Method 24 (appendix A to 40 CFR part 60).* You may use Method 24 to determine the mass fraction of non-aqueous volatile matter of aluminum coatings and use that value as a substitute for mass fraction of organic HAP.

(3) *ASTM D1259–85 (Standard Test Method for Nonvolatile Content of Resins).* You may use ASTM D1259–85 (available for purchase from ASTM) to measure the mass fraction of volatile matter of resins and gel coats for open molding operations and use that value as a substitute for mass fraction of organic HAP.

(4) *Alternative method.* You may use an alternative test method for determining mass fraction of organic HAP if you obtain prior approval by the Administrator. You must follow the procedure in § 63.7(f) to submit an alternative test method for approval.

(5) *Information from the supplier or manufacturer of the material.* You may rely on information other than that generated by the test methods specified in paragraphs (a)(1) through (4) of this section, such as manufacturer's formulation data, according to paragraphs (a)(5)(i) through (iii) of this section.

(i) Include in the organic HAP total each organic HAP that is present at 0.1 percent by mass or more for OSHA-defined carcinogens as specified in 29 CFR 1910.1200(d)(4) and at 1.0 percent by mass or more for other compounds. For example, if toluene (not an OSHA carcinogen) is 0.5 percent of the material by mass, you do not have to include it in the organic HAP total.

(ii) If the organic HAP content is provided by the material supplier or manufacturer as a range, then you must use the upper limit of the range for determining compliance. If a separate measurement of the total organic HAP content using the methods specified in paragraphs (a)(1) through (4) of this section exceeds the upper limit of the range of the total organic HAP content provided by the material supplier or manufacturer, then you must use the measured organic HAP content to determine compliance.

(iii) If the organic HAP content is provided as a single value, you may assume the value is a manufacturing target value and actual organic HAP content may vary from the target value. If a separate measurement of the total organic HAP content using the methods specified in paragraphs (a)(1) through (4) of this section is less than 2 percentage points higher than the value for total organic HAP content provided by the material supplier or manufacturer, then you may use the provided value to demonstrate compliance. If the measured total organic HAP content exceeds the provided value by 2 percentage points or more, then you must use the measured organic HAP content to determine compliance.

(6) *Solvent blends.* Solvent blends may be listed as single components for some regulated materials in certifications provided by manufacturers or suppliers. Solvent blends may contain organic HAP which must be counted toward the total organic HAP content of the materials. When detailed organic HAP content data for solvent blends are not available, you may use the values for organic HAP content that are listed in Table 5 or 6 to this subpart. You may use Table 6 to this subpart only if the solvent blends in the materials you use do not match any of the solvent blends in Table 5 to this subpart and you know only whether the blend is either aliphatic or aromatic. However, if test results indicate higher values than those listed in Table 5 or 6 to this subpart, then the test results must be used for determining compliance.

(b) *Determine the volume fraction solids in aluminum recreational boat surface*

coatings. To determine the volume fraction of coating solids (liters of coating solids per liter of coating) for each aluminum recreational boat surface coating, you must use one of the methods specified in paragraphs (b)(1) through (3) of this section. If the results obtained with paragraphs (b)(2) or (3) of this section do not to agree with those obtained according to paragraph (b)(1) of this section, you must use the results obtained with paragraph (b)(1) of this section to determine compliance.

(1) *ASTM Method D2697–86(1998) or D6093–97*. You may use ASTM Method D2697–86(1998) or D6093–97 (available for purchase from ASTM) to determine the volume fraction of coating solids for each coating. Divide the nonvolatile volume percent obtained with the methods by 100 to calculate volume fraction of coating solids.

(2) *Information from the supplier or manufacturer of the material*. You may obtain the volume fraction of coating solids for each coating from the supplier or manufacturer.

(3) *Calculation of volume fraction of coating solids*. You may determine it using equation 1 of this section:

$$\text{Solids} = 1 - \frac{m_{volatiles}}{D_{avg}} \qquad \text{(Eq. 1)}$$

Where:

Solids=volume fraction of coating solids, liters coating solids per liter coating.

$m_{volatiles}$=Total volatile matter content of the coating, including organic HAP, volatile organic compounds, water, and exempt compounds, determined according to Method 24 in appendix A of 40 CFR part 60, grams volatile matter per liter coating.

D_{avg}=average density of volatile matter in the coating, grams volatile matter per liter volatile matter, determined from test results using ASTM Method D1475–90 (available for purchase from ASTM), information from the supplier or manufacturer of the material, or reference sources providing density or specific gravity data for pure materials. If there is disagreement between ASTM Method D1475–90 test results and other information sources, the test results will take precedence.

(c) *Determine the density of each aluminum recreational boat wipedown solvent and surface coating*. Determine the density of all aluminum recreational boat wipedown solvents, surface coatings, thinners, and other additives from test results using ASTM Method D1475–90, information from the supplier or manufacturer of the material, or reference sources providing density or specific gravity data for pure materials. If there is disagreement between ASTM Method D1475–90 test results and other information sources, you must use the test results to demonstrate compliance.

NOTIFICATIONS, REPORTS, AND RECORDS

§63.5761 What notifications must I submit and when?

(a) You must submit all of the notifications in Table 7 to this subpart that apply to you by the dates in the table. The notifications are described more fully in 40 CFR part 63, subpart A, General Provisions, referenced in Table 8 to this subpart.

(b) If you change any information submitted in any notification, you must submit the changes in writing to the Administrator within 15 calendar days after the change.

§63.5764 What reports must I submit and when?

(a) You must submit the applicable reports specified in paragraphs (b) through (e) of this section. To the extent possible, you must organize each report according to the operations covered by this subpart and the compliance procedure followed for that operation.

(b) Unless the Administrator has approved a different schedule for submission of reports under §63.10(a), you must submit each report by the dates in paragraphs (b)(1) through (5) of this section.

(1) If your source is not controlled by an add-on control device (i.e., you are complying with organic HAP content limits, application equipment requirements, or MACT model point value

averaging provisions), the first compliance report must cover the period beginning 12 months after the compliance date specified for your source in § 63.5695 and ending on June 30 or December 31, whichever date is the first date following the end of the first 12-month period after the compliance date that is specified for your source in § 63.5695. If your source is controlled by an add-on control device, the first compliance report must cover the period beginning on the compliance date specified for your source in § 63.5695 and ending on June 30 or December 31, whichever date is the first date following the end of the first calendar half after the compliance date that is specified for your source in § 63.5695.

(2) The first compliance report must be postmarked or delivered no later than 60 calendar days after the end of the compliance reporting period specified in paragraph (b)(1) of this section.

(3) Each subsequent compliance report must cover the applicable semiannual reporting period from January 1 through June 30 or from July 1 through December 31.

(4) Each subsequent compliance report must be postmarked or delivered no later than 60 calendar days after the end of the semiannual reporting period.

(5) For each affected source that is subject to permitting regulations pursuant to 40 CFR part 70 or 71, and if the permitting authority has established dates for submitting semiannual reports pursuant to 40 CFR 70.6(a)(3)(iii)(A) or 40 CFR 71.6(a)(3)(iii)(A), you may submit the first and subsequent compliance reports according to the dates the permitting authority has established instead of according to the dates in paragraphs (b)(1) through (4) of this section.

(c) The compliance report must include the information specified in paragraphs (c)(1) through (7) of this section.

(1) Company name and address.

(2) A statement by a responsible official with that official's name, title, and signature, certifying the truth, accuracy, and completeness of the report.

(3) The date of the report and the beginning and ending dates of the reporting period.

(4) A description of any changes in the manufacturing process since the last compliance report.

(5) A statement or table showing, for each regulated operation, the applicable organic HAP content limit, application equipment requirement, or MACT model point value averaging provision with which you are complying. The statement or table must also show the actual weighted-average organic HAP content or weighted-average MACT model point value (if applicable) for each operation during each of the rolling 12-month averaging periods that end during the reporting period.

(6) If you were in compliance with the emission limits and work practice standards during the reporting period, you must include a statement to that effect.

(7) If you deviated from an emission limit or work practice standard during the reporting period, you must also include the information listed in paragraphs (c)(7)(i) through (iv) of this section in the semiannual compliance report.

(i) A description of the operation involved in the deviation.

(ii) The quantity, organic HAP content, and application method (if relevant) of the materials involved in the deviation.

(iii) A description of any corrective action you took to minimize the deviation and actions you have taken to prevent it from happening again.

(iv) A statement of whether or not your facility was in compliance for the 12-month averaging period that ended at the end of the reporting period.

(d) If your facility has an add-on control device, you must submit semiannual compliance reports and quarterly excess emission reports as specified in § 63.10(e). The contents of the reports are specified in § 63.10(e).

(e) If your facility has an add-on control device, you must complete a startup, shutdown, and malfunction plan as specified in § 63.6(e), and you must submit the startup, shutdown, and malfunction reports specified in § 63.10(e)(5).

§ 63.5767 What records must I keep?

You must keep the records specified in paragraphs (a) through (d) of this

section in addition to records specified in individual sections of this subpart.

(a) You must keep a copy of each notification and report that you submitted to comply with this subpart.

(b) You must keep all documentation supporting any notification or report that you submitted.

(c) If your facility is not controlled by an add-on control device (i.e., you are complying with organic HAP content limits, application equipment requirements, or MACT model point value averaging provisions), you must keep the records specified in paragraphs (c)(1) through (3) of this section.

(1) The total amounts of open molding production resin, pigmented gel coat, clear gel coat, tooling resin, and tooling gel coat used per month and the weighted-average organic HAP contents for each operation, expressed as weight-percent. For open molding production resin and tooling resin, you must also record the amounts of each applied by atomized and nonatomized methods.

(2) The total amount of each aluminum coating used per month (including primers, top coats, clear coats, thinners, and activators) and the weighted-average organic HAP content as determined in §63.5752.

(3) The total amount of each aluminum wipedown solvent used per month and the weighted-average organic HAP content as determined in §63.5749.

(d) If your facility has an add-on control device, you must keep the records specified in §63.10(b) relative to control device startup, shut down, and malfunction events; control device performance tests; and continuous monitoring system performance evaluations.

§63.5770 In what form and for how long must I keep my records?

(a) Your records must be readily available and in a form so they can be easily inspected and reviewed.

(b) You must keep each record for 5 years following the date that each record is generated.

(c) You must keep each record on site for at least 2 years after the date that each record is generated. You can keep the records offsite for the remaining 3 years.

(d) You can keep the records on paper or an alternative media, such as microfilm, computer, computer disks, magnetic tapes, or on microfiche.

OTHER INFORMATION YOU NEED TO KNOW

§63.5773 What parts of the General Provisions apply to me?

You must comply with the requirements of the General Provisions in 40 CFR part 63, subpart A, as specified in Table 8 to this subpart.

§63.5776 Who implements and enforces this subpart?

(a) If the Administrator has delegated authority to your State or local agency, the State or local agency has the authority to implement and enforce this subpart.

(b) In delegating implementation and enforcement authority of this subpart to a State or local agency under 40 CFR part 63, subpart E, the authorities that are retained by the Administrator of the U.S. EPA and are not transferred to the State or local agency are listed in paragraphs (b)(1) through (4) of this section.

(1) Under §63.6(g), the authority to approve alternatives to the standards listed in paragraphs (b)(1)(i) through (vii) of this section is not delegated.

(i) §63.5698—Emission limit for open molding resin and gel coat operations.

(ii) §63.5728—Standards for closed molding resin operations.

(iii) §63.5731(a)—Standards for resin and gel coat mixing operations.

(iv) §63.5734—Standards for resin and gel coat application equipment cleaning operations.

(v) §63.5740(a)—Emission limit for carpet and fabric adhesive operations.

(vi) §63.5743—Standards for aluminum recreational boat surface coating operations.

(vii) §63.5746(g)—Approval of alternative means of demonstrating compliance with the emission limits for aluminum recreational boat surface coating operations.

(2) Under §63.7(e)(2)(ii) and (f), the authority to approve alternatives to the test methods listed in paragraphs (b)(2)(i) through (iv) of this section is not delegated.

(i) § 63.5719(b)—Method for determining whether an enclosure is a total enclosure.

(ii) § 63.5719(c)—Methods for measuring emissions from a control device.

(iii) § 63.5725(d)(1)—Performance specifications for thermal oxidizer combustion temperature monitors.

(iv) § 63.5758—Method for determining hazardous air pollutant content of regulated materials.

(3) Under § 63.8(f), the authority to approve major alternatives to the monitoring requirements listed in § 63.5725 is not delegated. A ''major alternative'' is defined in § 63.90.

(4) Under § 63.10(f), the authority to approve major alternatives to the reporting and recordkeeping requirements listed in §§ 63.5764, 63.5767, and 63.5770 is not delegated. A ''major alternative'' is defined in § 63.90.

DEFINITIONS

§ 63.5779 What definitions apply to this subpart?

Terms used in this subpart are defined in the Clean Air Act, in § 63.2, and in this section as follows:

Add-on control means an air pollution control device, such as a thermal oxidizer, that reduces pollution in an air stream by destruction or removal before discharge to the atmosphere.

Administrator means the Administrator of the United States Environmental Protection Agency (U.S. EPA) or an authorized representative (for example, a State delegated the authority to carry out the provisions of this subpart).

Aluminum recreational boat means any marine or freshwater recreational boat that has a hull or deck constructed primarily of aluminum. A recreational boat is a vessel which by design and construction is intended by the manufacturer to be operated primarily for pleasure, or to be leased, rented or chartered to another for the latter's pleasure (rather than for commercial or military purposes); and whose major structural components are fabricated and assembled in an indoor, production-line manufacturing plant or similar land-side operation and not in a dry dock, graving dock, or marine railway on the navigable waters of the United States.

Aluminum recreational boat surface coating operation means the application of primers or top coats to aluminum recreational boats. It also includes the application of clear coats over top coats. Aluminum recreational boat surface coating operations do not include the application of wood coatings or antifoulant coatings to aluminum recreational boats.

Aluminum coating spray gun cleaning means the process of flushing or removing paints or coatings from the interior or exterior of a spray gun used to apply aluminum primers, clear coats, or top coats to aluminum recreational boats.

Aluminum wipedown solvents means solvents used to remove oil, grease, welding smoke, or other contaminants from the aluminum surfaces of a boat before priming or painting. Aluminum wipedown solvents contain no coating solids; aluminum surface preparation materials that contain coating solids are considered coatings for the purpose of this subpart and are not wipedown solvents.

Antifoulant coating means any coating that is applied to the underwater portion of a boat specifically to prevent or reduce the attachment of biological organisms and that is registered with EPA as a pesticide under the Federal Insecticide, Fungicide, and Rodenticide Act (7 U.S.C. section 136, *et seq.*). For the purpose of this subpart, primers used with antifoulant coatings to prepare the surface to accept the antifoulant coating are considered antifoulant coatings.

Assembly adhesive means any chemical material used in the joining of one fiberglass, metal, foam, or wood parts to another to form a temporary or permanently bonded assembly. Assembly adhesives include, but are not limited to, methacrylate adhesives and putties made from polyester or vinylester resin mixed with inert fillers or fibers.

Atomized resin application means a resin application technology in which the resin leaves the application equipment and breaks into droplets or an aerosol as it travels from the application equipment to the surface of the

part. Atomized resin application includes, but is not limited to, resin spray guns and resin chopper spray guns.

Boat means any type of vessel, other than a seaplane, that can be used for transportation on the water.

Boat manufacturing facility means a facility that manufactures the hulls or decks of boats from fiberglass or aluminum or assembles boats from premanufactured hulls and decks, or builds molds to make fiberglass hulls or decks. A facility that manufactures only parts of boats (such as hatches, seats, or lockers) or boat trailers, but no boat hulls or decks or molds for fiberglass boat hulls or decks, is not considered a boat manufacturing facility for the purpose of this subpart.

Carpet and fabric adhesive means any chemical material that permanently attaches carpet, fabric, or upholstery to any surface of a boat.

Clear gel coat means gel coats that are clear or translucent so that underlying colors are visible. Clear gel coats are used to manufacture parts for sale. Clear gel coats do not include tooling gel coats used to build or repair molds.

Closed molding means any molding process in which pressure is used to distribute the resin through the reinforcing fabric placed between two mold surfaces to either saturate the fabric or fill the mold cavity. The pressure may be clamping pressure, fluid pressure, atmospheric pressure, or vacuum pressure used either alone or in combination. The mold surfaces may be rigid or flexible. Closed molding includes, but is not limited to, compression molding with sheet molding compound, infusion molding, resin injection molding (RIM), vacuum-assisted resin transfer molding (VARTM), resin transfer molding (RTM), and vacuum-assisted compression molding. Processes in which a closed mold is used only to compact saturated fabric or remove air or excess resin from the fabric (such as in vacuum bagging), are not considered closed molding. Open molding steps, such as application of a gel coat or skin coat layer by conventional open molding prior to a closed molding process, are not closed molding.

Cured resin and gel coat means resin or gel coat that has been polymerized and changed from a liquid to a solid.

Deviation means any instance in which an affected source subject to this subpart or an owner or operator of such a source:

(1) Fails to meet any requirement or obligation established by this subpart, including, but not limited to, any emission limit, operating limit, or work practice requirement;

(2) Fails to meet any term or condition which is adopted to implement an applicable requirement in this subpart and which is included in the operating permit for any affected source required to obtain such permit; or

(3) Fails to meet any emission limit, operating limit, or work practice requirement in this subpart during any startup, shutdown, or malfunction, regardless of whether or not such failure is permitted by this subpart.

Enclosure means a structure, such as a spray booth, that surrounds a source of emissions and captures and directs the emissions to an add-on control device.

Fiberglass boat means a vessel in which either the hull or deck is built from a composite material consisting of a thermosetting resin matrix reinforced with fibers of glass, carbon, aramid, or other material.

Fiberglass hull and deck coatings means coatings applied to the exterior or interior surface of fiberglass boat hulls and decks on the completed boat. Polyester and vinylester resins and gel coats used in building fiberglass parts are not fiberglass hull and deck coatings for the purpose of this subpart.

Filled resin means a resin to which an inert material has been added to change viscosity, density, shrinkage, or other physical properties.

Gel coat means a thermosetting resin surface coating containing styrene (Chemical Abstract Service or CAS No. 100–42–5) or methyl methacrylate (CAS No. 80–62–6), either pigmented or clear, that provides a cosmetic enhancement or improves resistance to degradation from exposure to the elements. Gel coat layers do not contain any reinforcing fibers and gel coats are applied directly to mold surfaces or to a finished laminate.

Hazardous air pollutant or HAP means any air pollutant listed in, or pursuant to section 112(b) of the Clean Air Act.

Hazardous air pollutant content or HAP content means the amount of HAP contained in a regulated material at the time it is applied to the part being manufactured. If no HAP is added to a material as a thinner or diluent, then the HAP content is the same as the HAP content of the material as purchased from the supplier. For resin and gel coat, HAP content does not include any HAP contained in the catalyst added to the resin or gel coat during application to initiate curing.

Hazardous air pollutant data sheet (HDS) means documentation furnished by a material supplier or an outside laboratory to provide the organic HAP content of the material by weight, measured using an EPA Method, manufacturer's formulation data, or an equivalent method. For aluminum coatings, the HDS also documents the solids content by volume, determined from the manufacturer's formulation data. The purpose of the HDS is to help the affected source in showing compliance with the organic HAP content limits contained in this subpart. The HDS must state the maximum total organic HAP concentration, by weight, of the material. It must include any organic HAP concentrations equal to or greater than 0.1 percent by weight for individual organic HAP that are carcinogens, as defined by the Occupational Safety and Health Administration Hazard Communication Standard (29 CFR part 1910), and 1.0 percent by weight for all other individual organic HAP, as formulated. The HDS must also include test conditions if EPA Method 311 is used for determining organic HAP content.

Maximum achievable control technology (MACT) model point value means a number calculated for open molding operations that is a surrogate for emissions and is used to determine if your open molding operations are in compliance with the provisions of this subpart. The units for MACT model point values are kilograms of organic HAP per megagram of resin or gel coat applied.

Manufacturer's certification means documentation furnished by a material supplier that shows the organic HAP content of a material and includes a HDS.

Mold means the cavity or surface into or on which gel coat, resin, and fibers are placed and from which finished fiberglass parts take their form.

Mold sealing and release agents means materials applied to a mold to seal, polish, and lubricate the mold to prevent parts from sticking to the mold. Mold sealers, waxes, and glazing and buffing compounds are considered mold sealing and release agents for the purposes of this subpart.

Mold stripping and cleaning solvents means materials used to remove mold sealing and release agents from a mold before the mold surface is repaired, polished, or lubricated during normal mold maintenance.

Month means a calendar month.

Neat resin means a resin to which no filler has been added.

Nonatomized resin application means any application technology in which the resin is not broken into droplets or an aerosol as it travels from the application equipment to the surface of the part. Nonatomized resin application technology includes, but is not limited to, flowcoaters, chopper flowcoaters, pressure fed resin rollers, resin impregnators, and hand application (for example, paint brush or paint roller).

Open molding resin and gel coat operation means any process in which the reinforcing fibers and resin are placed in the mold and are open to the surrounding air while the reinforcing fibers are saturated with resin. For the purposes of this subpart, open molding includes operations in which a vacuum bag or similar cover is used to compress an uncured laminate to remove air bubbles or excess resin, or to achieve a bond between a core material and a laminate.

Pigmented gel coat means opaque gel coats used to manufacture parts for sale. Pigmented gel coats do not include tooling gel coats used to build or repair molds.

Production resin means any resin used to manufacture parts for sale. Production resins do not include tooling resins used to build or repair molds, or assembly adhesives as defined in this section.

Recycled resin and gel coat application equipment cleaning solvent means cleaning solvents recycled on-site or returned to the supplier or another party to remove resin or gel coat residues so that the solvent can be reused.

Research and development activities means:

(1) Activities conducted at a laboratory to analyze air, soil, water, waste, or product samples for contaminants, environmental impact, or quality control;

(2) Activities conducted to test more efficient production processes or methods for preventing or reducing adverse environmental impacts, provided that the activities do not include the production of an intermediate or final product for sale or exchange for commercial profit, except in a *de minimis* manner; and

(3) Activities conducted at a research or laboratory facility that is operated under the close supervision of technically trained personnel, the primary purpose of which is to conduct research and development into new processes and products and that is not engaged in the manufacture of products for sale or exchange for commercial profit, except in a *de minimis* manner.

Resin means any thermosetting resin with or without pigment containing styrene (CAS No. 100–42–5) or methyl methacrylate (CAS No. 80–62–6) and used to encapsulate and bind together reinforcement fibers in the construction of fiberglass parts.

Resin and gel coat application equipment cleaning means the process of flushing or removing resins and gel coats from the interior or exterior of equipment that is used to apply resin or gel coat in the manufacture of fiberglass parts.

Resin and gel coat mixing operation means any operation in which resin or gel coat, including the mixing of putties or polyputties, is combined with additives that include, but are not limited to, fillers, promoters, or catalysts.

Roll-out means the process of using rollers, squeegees, or similar tools to compact reinforcing materials saturated with resin to remove trapped air or excess resin.

Skin coat is a layer of resin and fibers applied over the gel coat to protect the gel coat from being deformed by the next laminate layers.

Tooling resin means the resin used to build or repair molds (also known as tools) or prototypes (also known as plugs) from which molds will be made.

Tooling gel coat means the gel coat used to build or repair molds (also known as tools) or prototypes (also known as plugs) from which molds will be made.

Vacuum bagging means any molding technique in which the reinforcing fabric is saturated with resin and then covered with a flexible sheet that is sealed to the edge of the mold and where a vacuum is applied under the sheet to compress the laminate, remove excess resin, or remove trapped air from the laminate during curing. Vacuum bagging does not include processes that meet the definition of closed molding.

Vinylester resin means a thermosetting resin containing esters of acrylic or methacrylic acids and having double-bond and ester linkage sites only at the ends of the resin molecules.

Volume fraction of coating solids means the ratio of the volume of coating solids (also known as volume of nonvolatiles) to the volume of coating; liters of coating solids per liter of coating.

Wood coatings means coatings applied to wooden parts and surfaces of boats, such as paneling, cabinets, railings, and trim. Wood coatings include, but are not limited to, primers, stains, sealers, varnishes, and enamels. Polyester and vinylester resins or gel coats applied to wooden parts to encapsulate them or bond them to other parts are not wood coatings.

TABLE 1 TO SUBPART VVVV—COMPLIANCE DATES FOR NEW AND EXISTING BOAT MANUFACTURING FACILITIES

As specified in §63.5695, you must comply by the dates in the following table:

If your facility is—	And—	Then you must comply by this date—
1. An existing source.	Is a major source on or before August 22, 2001[1].	August 23, 2004.

If your facility is—	And—	Then you must comply by this date—
2. An existng or new area source.	Becomes a major source after August 22, 2001[1].	1 year after becoming a major source or August 22, 2002, whichever is later.
3. A new source ...	Is a major source at startup[1].	Upon startup or August 22, 2001, whichever is later.

[1]Your facility is a major source if it is a stationary source or group of stationary sources located within a contiguous area and under common control that emits or can potentially emit, considering controls, in the aggregate, 9.1 megagrams or more per year of a single hazardous air pollutant or 22.7 megagrams or more per year of a combination of hazardous air pollutants.

TABLE 2 TO SUBPART VVVV OF PART 63—ALTERNATIVE ORGANIC HAP CONTENT REQUIREMENTS FOR OPEN MOLDING RESIN AND GEL COAT OPERATIONS

As specified in §§ 63.5701(b), 63.5704(b)(2), and 63.5713(a), (b), and (d), you must comply with the requirements in the following table:

For this operation—	And this applicaton method—	You must not exceed this weighted-average organic HAP content (weight percent) requirement—
1. Production resin operations	Atomized (spray)	28 percent.
2. Production resin operations	Nonatomized (nonspray)	35 percent.
3. Pigmented gel coat operations	Any method	33 percent.
4. Clear gel coat operations	Any method	48 percent
5. Tooling resin operations	Atomized (spray)	30 percent.
6. Tooling resin operations	Nonatomized (nonspray)	39 percent.
7. Tooling gel coat operations	Any method	40 percent.

TABLE 3 TO SUBPART VVVV OF PART 63—MACT MODEL POINT VALUE FORMULAS FOR OPEN MOLDING OPERATIONS[1]

As specified in §§ 63.5710(d) and 63.5714(a), you must calculate point values using the formulas in the following table:

For this operation—	And this application method—	Use this formula to calculate the MACT model plant value for each resin and gel coat—
1. Production resin, tooling resin	a. Atomized	$0.014 \times (\text{Resin HAP\%})^{2.425}$
	b. Atomized, plus vacuum bagging with roll-out.	$0.01185 \times (\text{Resin HAP\%})^{2.425}$
	c. Atomized, plus vacuum bagging without roll-out.	$0.00945 \times (\text{Resin HAP\%})^{2.425}$
	d. Nonatomized	$0.014 \times (\text{Resin HAP\%})^{2.275}$
	e. Nonatomized, plus vaccum bagging with roll-out.	$0.0110 \times (\text{Resin HAP\%})^{2.275}$
	f. Nonatomized, plus vacuum bagging without roll-out.	$0.0076 \times (\text{Resin HAP\%})^{2.275}$
2. Pigmented gel coat, clear gel coat, tooling gel coat.	All methods	$0.445 \times (\text{Gel coat HAP\%})^{1.675}$

[1]Equations calculate MACT model point value in kilograms of organic HAP per megagrams of resin or gel coat applied. The equations for vacuum bagging with roll-out are applicable when a facility rolls out the applied resin and fabric prior to applying the vacuum bagging materials. The equations for vacuum bagging without roll-out are applicable when a facility applies the vacuum bagging materials immediately after resin application without rolling out the resin and fabric. HAP% = organic HAP content as supplied, expressed as a weight-percent value between 0 and 100 percent.

[66 FR 44232, Aug. 22, 2001; 66 FR 50504, Oct. 3, 2001]

TABLE 4 TO SUBPART VVVV OF PART 63—OPERATING LIMITS IF USING AN ADD-ON CONTROL DEVICE FOR OPEN MOLDING OPERATIONS

As specified in §§ 63.5715(a) and 63.5725(f)(5), you must meet the operating limits in the following table:

For the following device—	You must meet the following operating limit—	And you must demonstrate continuous compliance with the operating limit by—
1. Thermal oxidizer	The average combustion temperature in any 3-hour period must not fall below the combustion temperature limit established according to §63.5725(d).	a. Collecting the combustion temperature data according to §63.5725(d); b. reducing the data to 3-hour block averages; and c. maintaining the 3-hour average combustion temperature at or above the temperature limit.
2. Other control devices	An operating limit approved by the Administrator according to §63.8(f).	a. Collecting parameter monitoring as approved by the Administrator according to §63.8(f); and b. maintaining the parameters within the operating limits approved according to §63.8(f).
3. Emission capture system that is a PTE according to §63.5719(b).	a. The direction of the air flow at all times must be into the enclosure; and b. in any 3-hour period, either the average facial velocity of air through all natural draft openings in the enclosure must be at least 200 feet per minute; or c. the pressure drop across the enclosure must be at least 0.007 inch H_2O, as established in Method 204 of appendix M to 40 CFR part 51.	i. Collecting the direction of air flow, and either the facial velocity of air through all natural draft openings according to §63.5725(f)(3) or the pressure drop across the enclosure according to §63.5725(f)(4); and ii. reducing the data for facial velocity or pressure drop to 3-hour block averages; and iii. maintaining the 3-hour average facial velocity of air flow through all natural draft openings or the pressure drop at or above the facial velocity limit or pressure drop limit, and maintaining the direction of air flow into the enclosure at all times.
4. Emission capture system that is not a PTE according to §63.5719(b).	a. The average gas volumetric flow rate or duct static pressure in each duct between a capture device and add-on control device inlet in any 3-hour period must not fall below the average volumetric flow rate or duct static pressure limit established for that capture device according to §63.5725(f)(5); and b. the average pressure drop across an opening in each enclosure in any 3-hour period must not fall below the average pressure drop limit established for that capture device according to §63.5725(f)(5).	i. Collecting the gas volumetric flow rate or duct static pressure for each capture device according to §63.5725(f)(1) and (3); ii. reducing the data to 3-hour block averages; iii. maintaining the 3-hour average gas volumetric flow rate or duct static pressure for each capture device at or above the gas volumetric flow rate or duct static pressure limit; iv. collecting data for the pressure drop across an opening in each enclosure according to §63.5725(f)(2) and (4); v. reducing the data to 3-hour block averages; and vi. maintaining the 3-hour average pressure drop across the opening for each enclosure at or above the gas volumetric flow rate or duct static pressure limit.

TABLE 5 TO SUBPART VVVV OF PART 63—DEFAULT ORGANIC HAP CONTENTS OF SOLVENTS AND SOLVENT BLENDS

As specified in §63.5758(a)(6), when detailed organic HAP content data for solvent blends are not available, you may use the values in the following table:

Solvent/solvent blend	CAS No.	Average organic HAP content, percent by mass	Typical organic HAP, percent by mass
1. Toluene	108–88–3	100	Toluene.
2. Xylene(s)	1330–20–7	100	Xylenes, ethylbenzene.
3. Hexane	110–54–3	50	n-hexane.
4. n-hexane	110–54–3	100	n-hexane.
5. Ethylbenzene	100–41–4	100	Ethylbenzene.
6. Aliphatic 140		0	None.
7. Aromatic 100		2	1% xylene, 1% cumene.
8. Aromatic 150		9	Naphthalene.
9. Aromatic naptha	64742–95–6	2	1% xylene, 1% cumene.
10. Aromatic solvent	64742–94–5	10	Naphthalene.
11. Exempt mineral spirits	8032–32–4	0	None.
12. Ligroines (VM & P)	8032–32–4	0	None.
13. Lactol spirits	64742–89–6	15	Toluene.
14. Low aromatic white spirit	64742–82–1	0	None.
15. Mineral spirits	64742–88–7	1	Xylenes.
16. Hydrotreated naphtha	64742–48–9	0	None.
17. Hydrotreated light distillate	64742–47–8	0.1	Toluene.
18. Stoddard solvent	8052–41–3	1	Xylenes.
19. Super high-flash naphtha	64742–95–6	5	Xylenes.
20. Varol® solvent	8052–49–3	1	0.5% xylenes, 0.5% ethyl benzene.
21. VM & P naphtha	64742–89–8	6	3% toluene, 3% xylene.
22. Petroleum distillate mixture	68477–31–6	8	4% naphthalene, 4% biphenyl.

TABLE 6 TO SUBPART VVVV OF PART 63—DEFAULT ORGANIC HAP CONTENTS OF PETROLEUM SOLVENT GROUPS

As specified in §63.5758(a)(6), when detailed organic HAP content data for solvent blends are not available, you may use the values in the following table:

Solvent type	Average organic HAP content, percent by mass	Typical organic HAP, percent by mass
Aliphatic (Mineral Spirits 135, Mineral Spirits 150 EC, Naphtha, Mixed Hydrocarbon, Aliphatic Hydrocarbon, Aliphatic Naptha, Naphthol Spirits, Petroleum Spirits, Petroleum Oil, Petroleum Naphtha, Solvent Naphtha, Solvent Blend.).	3	1% Xylene, 1% Toluene, and 1% Ethylbenzene.
Aromatic (Medium-flash Naphtha, High-flash Naphtha, Aromatic Naphtha, Light Aromatic Naphtha, Light Aromatic Hydrocarbons, Aromatic Hydrocarbons, Light Aromatic Solvent.).	6	4% Xylene, 1% Toluene, and 1% Ethylbenzene.

TABLE 7 TO SUBPART VVVV OF PART 63—APPLICABILITY AND TIMING OF NOTIFICATIONS

As specified in §63.5761(a), you must submit notifications according to the following table:

If your facility—	You must submit—	By this date—
1. Is an existing source subject to this subpart.	An initial notification containing the information specified in §63.9(b)(2).	No later than the dates specified in §63.9(b)(2).
2. Is a new source subject to this subpart	The notifications specified in §63.9(b)(3) to (5).	No later than the dates specified §63.9(b)(4) and (5).
3. Qualifies for a compliance extension as specified in §63.9(c).	A request for a compliance extension as specified in §63.9(c).	No later than the dates specified in §63.6(i).
4. Is complying with organic HAP content limits, application equipment requirements; or MACT model point value averaging provisions.	A notification of compliance status as specified in §63.9(h).	No later than 30 calendar days after the end of the first 12-month averaging period after your facility's compliance date.
5. Is complying by using an add-on control device.	a. notification of intent to conduct a performance test as specified in §63.9(e).	No later than the date specified in §63.9(e).
	b. A notification of the date for the continuous monitoring system performance evaluation as specified in §63.9(g).	With the notification of intent to conduct a performance test.
	c. A notification of compliance status as specified in §63.9(h).	No later than 60 calendar days after the completion of the add-on control device performance test and continuous monitoring system performance evaluation.

TABLE 8 TO SUBPART VVVV OF PART 63—APPLICABILITY OF GENERAL PROVISIONS (40 CFR PART 63, SUBPART A) TO SUBPART VVVV

As specified in §63.5773, you must comply with the applicable requirements of the General Provisions according to the following table:

Citation	Requirement	Applies to subpart VVVV	Explanation
§63.1(a)	General Applicability	Yes.	
§63.1(b)	Initial Applicability Determination	Yes.	
§63.1(c)(1)	Applicability After Standard Established.	Yes.	
§63.1(c)(2)		Yes	Area sources are not regulated by subpart VVVV.
§63.1(c)(3)		No	[Reserved]
§63.1(c)(4)–(5)		Yes.	
§63.1(d)		No	[Reserved]
63.1(e)	Applicability of Permit Program	Yes.	
§63.2	Definitions	Yes	Additional definitions are found in §63.5779.
§63.3	Units and Abbreviations	Yes.	
§63.4(a)	Prohibited Activities	Yes.	

Citation	Requirement	Applies to subpart VVVV	Explanation
§ 63.4(b)–(c)	Circumvention/Severability	Yes.	
§ 63.5(a)	Construction/Reconstruction	Yes.	
§ 63.5(b)	Requirements for Existing, Newly Constructed, and Reconstructed Sources.	Yes.	
§ 63.5(c)		No	[Reserved]
§ 63.5(d)	Application for Approval of Construction/Reconstruction.	Yes.	
§ 63.5(e)	Approval of Construction/Reconstruction.	Yes.	
§ 63.5(f)	Approval of Construction/Reconstruction Based on prior State Review.	Yes.	
§ 63.6(a)	Compliance with Standards and Maintenance Requirements—Applicability.	Yes.	
§ 63.6(b)	Compliance Dates for New and Reconstructed Sources.	Yes	§ 63.695 specifies compliance dates, including the compliance date for new area sources that become major sources after the effective date of the rule.
§ 63.6(c)	Compliance Dates for Existing Sources.	Yes	§ 63.5695 specifies compliance dates, including the compliance date for existing area sources that become major sources after the effective date of the rule.
§ 63.6(d)		No	[Reserved]
§ 63.6(e)(1)–(2)	Operation and Maintenance Requirements.	No	Operating requirements for open molding operations with add-on controls are specified in § 63.5725.
§ 63.6(e)(3)	Startup, Shut Down, and Malfunction Plans.	Yes	Only sources with add-on controls must complete startup, shutdown, and malfunction plans.
§ 63.6(f)	Compliance with Nonopacity Emission Standards.	Yes.	
§ 63.6(g)	Use of an Alternative Nonopacity Emission Standard.	Yes.	
§ 63.6(h)	Compliance with Opacity/Visible Emissions Standards.	No	Subpart VVVV does not specify opacity or visible emission standards.
§ 63.6(i)	Extension of Compliance with Emission Standards.	Yes.	
§ 63.6(j)	Exemption from Compliance with Emission Standards.	Yes.	
§ 63.7(a)(1)	Performance Test Requirements	Yes.	
§ 63.7(a)(2)	Dates for performance tests	No	§ 63.5716 specifies performance test dates.
§ 63.7(a)(3)	Performance testing at other times	Yes.	
§ 63.7(b)–(h)	Other performance testing requirements.	Yes.	
§ 63.8(a)(1)–(2)	Monitoring Requirements—Applicability.	Yes	All of § 63.8 applies only to sources with add-on controls. Additional monitoring requirements for sources with add-on controls are found in § 63.5725.
§ 63.8(a)(3)		No	[Reserved]
§ 63.8(a)(4)		No	Subpart VVVV does not refer directly or indirectly to § 63.11.
§ 63.8(b)(1)	Conduct of Monitoring	Yes.	
§ 63.8(b)(2)–(3)	Multiple Effluents and Multiple Continuous Monitoring Systems (CMS).	Yes	Applies to sources that use a CMS on the control device stack.
§ 63.8(c)(1)–(4)	Continuous Monitoring System Operation and Maintenance.	Yes.	
§ 63.8(c)(5)	Continuous Opacity Monitoring Systems (COMS).	No	Subpart VVVV does not have opacity or visible emission standards.
§ 63.8(c)(6)–(8)	Continuous Monitoring System Calibration Checks and Out-of-Control Periods.	Yes.	
§ 63.8(d)	Quality Control Program	Yes.	
§ 63.8(e)	CMS Performance Evaluation	Yes.	

Citation	Requirement	Applies to subpart VVVV	Explanation
§ 63.8(f)(1)–(5)	Use of an Alternative Monitoring Method.	Yes.	
§ 63.8(f)(6)	Alternative to Relative Accuracy Test.	Yes	Applies only to sources that use continuous emission monitoring systems (CEMS).
§ 63.8(g)	Data Reduction	Yes	
§ 63.9(a)	Notification Requirements—Applicability.	Yes.	
§ 63.9(b)	Initial Notifications	Yes	
§ 63.9(c)	Request for Compliance Extension	Yes.	
§ 63.9(d)	Notification That a New Source Is Subject to Special Compliance Requirements.	Yes.	
§ 63.9(e)	Notification of Performance Test	Yes	Applies only to sources with add-on controls.
§ 63.9(f)	Notification of Visible Emissions/Opacity Test.	No	Subpart VVVV does not have opacity or visible emission standards.
§ 63.9(g)(1)	Additional CMS Notifications—Date of CMS Performance Evaluation.	Yes	Applies only to sources with add-on controls.
§ 63.9(g)(2)	Use of COMS Data	No	Subpart VVVV does not require the use of COMS.
§ 63.9(g)(3)	Alternative to Relative Accuracy Testing.	Yes	Applies only to sources with CEMS.
§ 63.9(h)	Notification of Compliance Status	Yes.	
§ 63.9(i)	Adjustment of Deadlines	Yes.	
§ 63.9(j)	Change in Previous Information	Yes.	
§ 63.10(a)	Recordkeeping/Reporting—Applicability.	Yes.	
§ 63.10(b)(1)	General Recordkeeping Requirements.	Yes	§§ 63.567 and 63.5770 specify additional recordkeeping requirements.
§ 63.10(b)(2)(i)–(xi)	Recordkeeping Relevant to Startup, Shutdown, and Malfunction Periods and CMS.	Yes	Applies only to sources with add-on controls.
§ 63.10(b)(2)(xii)–(xiv)	General Recordkeeping Requirements.	Yes.	
§ 63.10(b)(3)	Recordkeeping Requirements for Applicability Determinations.	Yes	§ 63.5686 specifies applicability determinations for non-major sources.
§ 63.10(c)	Additional Recordkeeping for Sources with CMS.	Yes	Applies only to sources with add-on controls.
§ 63.10(d)(1)	General Reporting Requirements	Yes	§ 63.5764 specifies additional reporting requirements.
§ 63.10(d)(2)	Performance Test Results	Yes	§ 63.5764 specifies additional requirements for reporting performance test results.
§ 63.10(d)(3)	Opacity or Visible Emissions Observations.	No	Subpart VVVV does not specify opacity or visible emission standards.
§ 63.10(d)(4)	Progress Reports for Sources with Compliance Extensions.	Yes.	
§ 63.10(d)(5)	Startup, Shutdown, and Malfunction Reports.	Yes	Applies only to sources with add-on controls.
§ 63.10(e)(1)	Additional CMS Reports—General	Yes	Applies only to sources with add-on controls.
§ 63.10(e)(2)	Reporting Results of CMS Performance Evaluations.	Yes	Applies only to sources with add-on controls.
§ 63.10(e)(3)	Excess Emissions/CMS Performance Reports.	Yes	Applies only to sources with add-on controls.
§ 63.10(e)(4)	COMS Data Reports	No	Subpart VVVV does not specify opacity or visible emission standards.
§ 63.10(f)	Recordkeeping/Reporting Waiver	Yes.	
§ 63.11	Control Device Requirements—Applicability.	No	Facilities subject to subpart VVVV do not use flares as control devices.
§ 63.12	State Authority and Delegations	Yes	§ 63.5776 lists those sections of subpart A that are not delegated.
§ 63.13	Addresses	Yes.	
§ 63.14	Incorporation by Reference	Yes.	
§ 63.15	Availability of Information/Confidentiality.	Yes.	

APPENDIX A TO PART 63—TEST METHODS

METHOD 301—FIELD VALIDATION OF POLLUTANT MEASUREMENT METHODS FROM VARIOUS WASTE MEDIA

1. Applicability and principle

1.1 *Applicability*. This method, as specified in the applicable subpart, is to be used whenever a source owner or operator (hereafter referred to as an ''analyst'') proposes a test method to meet a U.S. Environmental Protection Agency (EPA) requirement in the absence of a validated method. This Method includes procedures for determining and documenting the quality, i.e., systematic error (bias) and random error (precision), of the measured concentrations from an effected source. This method is applicable to various waste media (i.e., exhaust gas, wastewater, sludge, etc.).

1.1.1 If EPA currently recognizes an appropriate test method or considers the analyst's test method to be satisfactory for a particular source, the Administrator may waive the use of this protocol or may specify a less rigorous validation procedure. A list of validated methods may be obtained by contacting the Emission Measurement Technical Information Center (EMTIC), Mail Drop 19, U.S. Environmental Protection Agency, Research Triangle Park, NC 27711, (919) 541–0200. Procedures for obtaining a waiver are in Section 12.0.

1.1.2 This method includes optional procedures that may be used to expand the applicability of the proposed method. Section 7.0 involves ruggedness testing (Laboratory Evaluation), which demonstrates the sensitivity of the method to various parameters. Section 8.0 involves a procedure for including sample stability in bias and precision for assessing sample recovery and analysis times; Section 9.0 involves a procedure for the determination of the practical limit of quantitation for determining the lower limit of the method. These optional procedures are required for the waiver consideration outlined in Section 12.0.

1.2 *Principle*. The purpose of these procedures is to determine bias and precision of a test method at the level of the applicable standard. The procedures involve (a) introducing known concentrations of an analyte or comparing the test method against a validated test method to determine the method's bias and (b) collecting multiple or collocated simultaneous samples to determine the method's precision.

1.2.1 *Bias*. Bias is established by comparing the method's results against a reference value and may be eliminated by employing a correction factor established from the data obtained during the validation test. An offset bias may be handled accordingly. Methods that have bias correction factors outside 0.7 to 1.3 are unacceptable. Validated method to proposed method comparisons, section 6.2, requires a more restrictive test of central tendency and a lower correction factor allowance of 0.90 to 1.10.

1.2.2 *Precision*. At the minimum, paired sampling systems shall be used to establish precision. The precision of the method at the level of the standard shall not be greater than 50 percent relative standard deviation. For a validated method to proposed method equivalency comparisons, section 6.2, the analyst must demonstrate that the precision of the proposed test method is as precise as the validated method for acceptance.

2. Definitions

2.1 *Negative bias*. Bias resulting when the measured result is less than the ''true'' value.

2.2 *Paired sampling system*. A sampling system capable of obtaining two replicate samples that were collected as closely as possible in sampling time and sampling location.

2.3 *Positive bias*. Bias resulting when the measured result is greater than the ''true'' value.

2.4 *Proposed method*. The sampling and analytical methodology selected for field validation using the method described herein.

2.5 *Quadruplet sampling system*. A sampling system capable of obtaining four replicate samples that were collected as closely as possible in sampling time and sampling location.

2.6 *Surrogate compound*. A compound that serves as a model for the types of compounds being analyzed (i.e., similar chemical structure, properties, behavior). The model can be distinguished by the method from the compounds being analyzed.

3. Reference Material

The reference materials shall be obtained or prepared at the level of the standard. Additional runs with higher and lower reference material concentrations may be made to expand the applicable range of the method, in accordance with the ruggedness test procedures.

3.1 *Exhaust Gas Tests*. The analyst shall obtain a known concentration of the reference material (i.e., analyte of concern) from an independent source such as a specialty gas manufacturer, specialty chemical company, or commercial laboratory. A list of vendors may be obtained from EMTIC (see Section 1.1.1). The analyst should obtain the manufacturer's stability data of the analyte concentration and recommendations for recertification.

3.2 *Other Waste Media Tests*. The analyst shall obtain pure liquid components of the reference materials (i.e., analytes of concern) from an independent manufacturer and dilute them in the same type matrix as the

source waste. The pure reference materials shall be certified by the manufacturer as to purity and shelf life. The accuracy of all diluted reference material concentrations shall be verified by comparing their response to independently-prepared materials (independently prepared in this case means prepared from pure components by a different analyst).

3.3 *Surrogate Reference Materials.* The analyst may use surrogate compounds, e.g., for highly toxic or reactive organic compounds, provided the analyst can demonstrate to the Administrator's satisfaction that the surrogate compound behaves as the analyte. A surrogate may be an isotope or one that contains a unique element (e.g., chlorine) that is not present in the source or a derivation of the toxic or reactive compound, if the derivative formation is part of the method's procedure. Laboratory experiments or literature data may be used to show behavioral acceptability.

3.4 *Isotopically Labeled Materials.* Isotope mixtures may contain the isotope and the natural analyte. For best results, the isotope labeled analyte concentration should be more than five times the natural concentration of the analyte.

4. EPA Performance Audit Material

4.1 To assess the method bias independently, the analyst shall use (in addition to the reference material) an EPA performance audit material, if it is available. The analyst may contact EMTIC (see section 1.1.1) to receive a list of currently available EPA audit materials. If the analyte is listed, the analyst should request the audit material at least 30 days before the validation test. If an EPA audit material is not available, request documentation from the validation report reviewing authority that the audit material is currently not available from EPA. Include this documentation with the field validation report.

4.2 The analyst shall sample and analyze the performance audit sample three times according to the instructions provided with the audit sample. The analyst shall submit the three results with the field validation report. Although no acceptance criteria are set for these performance audit results, the analyst and reviewing authority may use them to assess the relative error of sample recovery, sample preparation, and analytical procedures and then consider the relative error in evaluating the measured emissions.

5. Procedure for Determination of Bias and Precision in the Field

The analyst shall select one of the sampling approaches below to determine the bias and precision of the data. After analyzing the samples, the analyst shall calculate the bias and precision according to the procedure described in section 6.0. When sampling a stationary source, follow the probe placement procedures in section 5.4.

5.1 *Isotopic Spiking.* This approach shall be used only for methods that require mass spectrometry (MS) analysis. Bias and precision are calculated by procedures described in section 6.1.

5.1.1 *Number of Samples and Sampling Runs.* Collect a total of 12 replicate samples by either obtaining six sets of paired samples or three sets of quadruplet samples.

5.1.2 *Spiking Procedure.* Spike all 12 samples with the reference material at the level of the standard. Follow the appropriate spiking procedures listed below for the applicable waste medium.

5.1.2.1 *Exhaust Gas Testing.* The spike shall be introduced as close to the tip of the sampling probe as possible.

5.1.2.1.1 *Gaseous Reference Material with Sorbent or Impinger Sampling Trains.* Sample the reference material (in the laboratory or in the field) at a concentration which is close to the allowable concentration standard for the time required by the method, and then sample the gas stream for an equal amount of time. The time for sampling both the reference material and gas stream should be equal; however, the time should be adjusted to avoid sorbent breakthrough.

5.1.2.1.2 *Gaseous Reference Material with Sample Container (Bag or Canister).* Spike the sample containers after completion of each test run with an amount equal to the allowable concentration standard of the emission point. The final concentration of the reference material shall approximate the level of the emission concentration in the stack. The volume amount of reference material shall be less than 10 percent of the sample volume.

5.1.2.1.3 *Liquid and Solid Reference Material with Sorbent or Impinger Trains.* Spike the trains with an amount equal to the allowable concentration standard before sampling the stack gas. The spiking should be done in the field; however, it may be done in the laboratory.

5.1.2.1.4 *Liquid and Solid Reference Material with Sample Container (Bag or Canister).* Spike the containers at the completion of each test run with an amount equal to the level of the emission standard.

5.1.2.2 *Other Waste Media.* Spike the 12 replicate samples with the reference material either before or directly after sampling in the field.

5.2 *Comparison Against a Validated Test Method.* Bias and precision are calculated using the procedures described in section 6.2. This approach shall be used when a validated method is available and an alternative method is being proposed.

5.2.1 *Number of Samples and Sampling Runs.* Collect nine sets of replicate samples using a

paired sampling system (a total of 18 samples) or four sets of replicate samples using a quadruplet sampling system (a total of 16 samples). In each sample set, the validated test method shall be used to collect and analyze half of the samples.

5.2.2 *Performance Audit Exception*. Conduct the performance audit as required in section 4.0 for the validated test method. Conducting a performance audit on the test method being evaluated is recommended.

5.3 *Analyte Spiking*. This approach shall be used when sections 5.1 and 5.2 are not applicable. Bias and precision are calculated using the procedures described in Section 6.3.

5.3.1 *Number of Samples and Sampling Runs*. Collect a total of 24 samples using the quadruplet sampling system (a total of 6 sets of replicate samples).

5.3.2 In each quadruplet set, spike half of the samples (two out of the four) with the reference material according to the applicable procedure in section 5.1.2.1 or 5.1.2.2.

5.4 *Probe Placement and Arrangement for Stationary Source Stack or Duct Sampling*. The probes shall be placed in the same horizontal plane. For paired sample probes the arrangement should be that the probe tip is 2.5 cm from the outside edge of the other with a pitot tube on the outside of each probe. Other paired arrangements for the pitot tube may be acceptable. For quadruplet sampling probes, the tips should be in a 6.0 cm × 6.0 cm square area measured from the center line of the opening of the probe tip with a single pitot tube in the center or two pitot tubes with their location on either side of the probe tip configuration. An alternative arrangement should be proposed whenever the cross-sectional area of the probe tip configuration is approximately 5 percent of the stack or duct cross-sectional area.

6. Calculations

Data resulting from the procedures specified in section 5.0 shall be treated as follows to determine bias, correction factors, relative standard deviations, precision, and data acceptance.

6.1 *Isotopic Spiking*. Analyze the data for isotopic spiking tests as outlined in sections 6.1.1 through 6.1.6.

6.1.1 Calculate the numerical value of the bias using the results from the analysis of the isotopically spiked field samples and the calculated value of the isotopically labeled spike:

$B = CS - S_m$ Eq. 301=1

where:

B=Bias at the spike level.

S_m=Mean of the measured values of the isotopically spiked samples.

CS=Calculated value of the isotopically labeled spike.

6.1.2 Calculate the standard deviation of the S_i values as follows:

$$SD = \sqrt{\frac{\Sigma\left(S_i - S_m\right)^2}{(n-1)}}$$

Eq. 301–2

where:

S_i=Measured value of the isotopically labeled analyte in the ith field sample,

n=Number of isotopically spiked samples, 12.

6.1.3. Calculate the standard deviation of the mean (SDM) as follows:

$$SDM = \frac{SD}{\sqrt{n}}$$

Eq. 301–3

6.1.4 Test the bias for statistical significance by calculating the t-statistic,

$$t = \frac{|B|}{SDM}$$

Eq. 301–4

and compare it with the critical value of the two-sided t-distribution at the 95-percent confidence level and n − 1 degrees of freedom. This critical value is 2.201 for the eleven degrees of freedom when the procedure specified in section 5.1.2 is followed. If the calculated t-value is greater than the critical value the bias is statistically significant and the analyst should proceed to evaluate the correction factor.

6.1.5 *Calculation of a Correction Factor*. If the t-test does not show that the bias is statistically significant, use all analytical results without correction and proceed to the precision evaluation. If the method's bias is statistically significant, calculate the correction factor, CF, using the following equation:

$$CF = \frac{1}{1 + \frac{B}{CS}}$$

Eq. 301–5

If the CF is outside the range of 0.70 to 1.30, the data and method are considered unacceptable. For correction factors within the range, multiply all analytical results by the CF to obtain the final values.

6.1.6 *Calculation of the Relative Standard Deviation (Precision)*. Calculate the relative standard deviation as follows:

$$RSD = \left(\frac{SD}{S_m}\right) \times 100$$

Eq. 301–6

where S_m is the measured mean of the isotopically labeled spiked samples.

6.2 *Comparison with Validated Method.* Analyze the data for comparison with a validated method as outlined in sections 6.2.1 or 6.2.2, as appropriate. Conduct these procedures in order to determine if a proposed method produces results equivalent to a validated method. Make all necessary bias corrections for the validated method, as appropriate. If the proposed method fails either test, the method results are unacceptable, and conclude that the proposed method is not as precise or accurate as the validated method. For highly variable sources, additional precision checks may be necessary. The analyst should consult with the Administrator if a highly variable source is suspected.

6.2.1 *Paired Sampling Systems.*

6.2.1.1. *Precision.* Determine the acceptance of the proposed method's variance with respect to the variability of the validated method results. If a significant difference is determined, the proposed method and the results are rejected. Proposed methods demonstrating F-values equal to or less than the critical value have acceptable precision.

6.2.1.2 Calculate the variance of the proposed method, S_p2, and the variance of the validated method, S_v2, using the following equation:

$S_{(porv)}2=SD^2$ Eq. 301–7

where:

SD_v=Standard deviation provided with the validated method,

SD_p=Standard deviation of the proposed method calculated using Equation 301–9a.

6.2.1.3 *The F-test.* Determine if the variance of the proposed method is significantly different from that of the validated method by calculating the F-value using the following equation:

$$F = \frac{S_p^2}{S_v^2}$$

Eq. 301–8

Compare the experimental F value with the critical value of F. The critical value is 1.0 when the procedure specified in section 5.2.1 for paired trains is followed. If the calculated F is greater than the critical value, the difference in precision is significant and the data and proposed method are unacceptable.

6.2.1.4 *Bias Analysis.* Test the bias for statistical significance by calculating the t-statistic and determine if the mean of the differences between the proposed method and the validated method is significant at the 80-percent confidence level. This procedure requires the standard deviation of the validated method, SD_v, to be known. Employ the value furnished with the method. If the standard deviation of the validated method is not available, the paired replicate sampling procedure may not be used. Determine the mean of the paired sample differences, d_m, and the standard deviation, SD_d, of the differences, d_1's, using Equation 301–2 where: d_i replaces S_i, d_m replaces S_m. Calculate the standard deviation of the proposed method, SD_p, as follows:

$SD_p=SD_d-SD_v$ Eq. 301–9a

(If $SD_v>SD_d$, let $SD=SD_d/1.414$).

Calculate the value of the t-statistic using the following equation:

$$t = \frac{d_m}{\left(\frac{SD_p}{\sqrt{n}}\right)}$$

Eq. 301–9

where n is the total number of paired samples. For the procedure in section 5.2.1, n equals nine. Compare the calculated t-statistic with the corresponding value from the table of the t-statistic. When nine runs are conducted, as specified in section 5.2.1, the critical value of the t-statistic is 1.397 for eight degrees of freedom. If the calculated t-value is greater than the critical value the bias is statistically significant and the analyst should proceed to evaluate the correction factor.

6.2.1.5 *Calculation of a Correction Factor.* If the statistical test cited above does not show a significant bias with respect to the reference method, assume that the proposed method is unbiased and use all analytical results without correction. If the method's bias is statistically significant, calculate the correction factor, CF, as follows:

$$CF = \frac{1}{1+\frac{d_m}{V_m}}$$

Eq. 301–10

where V_m is the mean of the validated method's values.

Multiply all analytical results by CF to obtain the final values. The method results, and the method, are unacceptable if the correction factor is outside the range of 0.9 to 1.10.

6.2.2 *Quadruplet Replicate Sampling Systems.*

6.2.2.1 *Precision.* Determine the acceptance of the proposed method's variance with respect to the variability of the validated method results. If a significant difference is determined the proposed method and the results are rejected.

6.2.2.2 Calculate the variance of the proposed method, S_p^2, using the following equation:

$$S^2 = \frac{\sum d_i^2}{2n}$$

Eq. 301–11

where the d_i's are the differences between the validated method values and the proposed method values.

6.2.2.3 *The F-test*. Determine if the variance of the proposed method is more variable than that of the validated method by calculating the F-value using Equation 301–8. Compare the experimental F value with the critical value of F. The critical value is 1.0 when the procedure specified in section 5.2.2 for quadruplet trains is followed. The calculated F should be less than or equal to the critical value. If the difference in precision is significant the results and the proposed method are unacceptable.

6.2.2.4 *Bias Analysis*. Test the bias for statistical significance at the 80 percent confidence level by calculating the t-statistic. Determine the bias (mean of the differences between the proposed method and the validated method, d_m) and the standard deviation, SD_d, of the differences. Calculate the standard deviation of the differences, SD_d, using Equation 301–2 and substituting d_i for S_i. The following equation is used to calculate d_i:

$$d_i = \frac{\left(V_{1_i} + V_{2_i}\right)}{2} - \frac{\left(P_{1_i} + P_{2_i}\right)}{2}$$

Eq. 301–12

and: V_{1i}=First measured value of the validated method in the ith test sample.

P_{1i}=First measured value of the proposed method in the ith test sample.

Calculate the t-statistic using Equation 301–9 where n is the total number of test sample differences (d_i). For the procedure in section 5.2.2, n equals four. Compare the calculated t-statistic with the corresponding value from the table of the t-statistic and determine if the mean is significant at the 80-percent confidence level. When four runs are conducted, as specified in section 5.2.2, the critical value of the t-statistic is 1.638 for three degrees of freedom. If the calculated t-value is greater than the critical value the bias is statistically significant and the analyst should proceed to evaluate the correction factor.

6.2.2.5 *Correction Factor Calculation*. If the method's bias is statistically significant, calculate the correction factor, CF, using Equation 301–10. Multiply all analytical results by CF to obtain the final values. The method results, and the method, are unacceptable if the correction factor is outside the range of 0.9 to 1.10.

6.3 *Analyte Spiking*. Analyze the data for analyte spike testing as outlined in Sections 6.3.1 through 6.3.3.

6.3.1 *Precision*.

6.3.1.1 *Spiked Samples*. Calculate the difference, d_i, between the pairs of the spiked proposed method measurements for each replicate sample set. Determine the standard deviation (SD_s) of the spiked values using the following equation:

$$SD_s = \sqrt{\frac{\sum d_i^2}{2n}}$$

Eq. 301–13

where: n = Number of runs.

Calculate the relative standard deviation of the proposed spiked method using Equation 301–6 where S_m is the measured mean of the analyte spiked samples. The proposed method is unacceptable if the RSD is greater than 50 percent.

6.3.1.2 *Unspiked Samples*. Calculate the standard deviation of the unspiked values using Equation 301–13 and the relative standard deviation of the proposed unspiked method using Equation 301–6 where S_m is the measured mean of the analyte spiked samples. The RSD must be less than 50 percent.

6.3.2 *Bias*. Calculate the numerical value of the bias using the results from the analysis of the spiked field samples, the unspiked field samples, and the calculated value of the spike:

$B = S_m - M_m - CS$

Eq. 301–14

where: B = Bias at the spike level.

S_m = Mean of the spiked samples.

M_m = Mean of the unspiked samples.

CS = Calculated value of the spiked level.

6.3.2.1 Calculate the standard deviation of the mean using the following equation where SD_s and SD_u are the standard deviations of the spiked and unspiked sample values respectively as calculated using Equation 301–13.

$$SD = \sqrt{SD_s^2} + SD_u^2$$

Eq. 301–15

6.3.2.2 Test the bias for statistical significance by calculating the t-statistic using Equation 301–4 and comparing it with the critical value of the two-sided t-distribution at the 95-percent confidence level and n-1 degrees of freedom. This critical value is 2.201 for the eleven degrees of freedom.

6.3.3 *Calculation of a Correction Factor*. If the t-test shows that the bias is not statistically significant, use all analytical results without correction. If the method's bias is statistically significant, calculate the correction factor using Equation 301–5. Multiply

all analytical results by CF to obtain the final values.

7. Ruggedness Testing (Optional)

7.1 *Laboratory Evaluation.*

7.1.1 Ruggedness testing is a useful and cost-effective laboratory study to determine the sensitivity of a method to certain parameters such as sample collection rate, interferant concentration, collecting medium temperature, or sample recovery temperature. This Section generally discusses the principle of the ruggedness test. A more detailed description is presented in citation 10 of Section 13.0.

7.1.2 In a ruggedness test, several variables are changed simultaneously rather than one variable at a time. This reduces the number of experiments required to evaluate the effect of a variable. For example, the effect of seven variables can be determined in eight experiments rather than 128 (W.J. Youden, Statistical Manual of the Association of Official Analytical Chemists, Association of Official Analytical Chemists, Washington, DC, 1975, pp. 33–36).

7.1.3 Data from ruggedness tests are helpful in extending the applicability of a test method to different source concentrations or source categories.

8. Procedure for Including Sample Stability in Bias and Precision Evaluations

8.1 *Sample Stability.*

8.1.1 The test method being evaluated must include procedures for sample storage and the time within which the collected samples shall be analyzed.

8.1.2 This section identifies the procedures for including the effect of storage time in bias and precision evaluations. The evaluation may be deleted if the test method specifies a time for sample storage.

8.2 *Stability Test Design.* The following procedures shall be conducted to identify the effect of storage times on analyte samples. Store the samples according to the procedure specified in the test method. When using the analyte spiking procedures (section 5.3), the study should include equal numbers of spiked and unspiked samples.

8.2.1 Stack Emission Testing.

8.2.1.1 For sample container (bag or canister) and impinger sampling systems, sections 5.1 and 5.3, analyze six of the samples at the minimum storage time. Then analyze the same six samples at the maximum storage time.

8.2.1.2 For sorbent and impinger sampling systems, sections 5.1 and 5.3, that require extraction or digestion, extract or digest six of the samples at the minimum storage time and extract or digest six other samples at the maximum storage time. Analyze an aliquot of the first six extracts (digestates) at both the minimum and maximum storage times. This will provide some freedom to analyze extract storage impacts.

8.2.1.3 For sorbent sampling systems, sections 5.1 and 5.3, that require thermal desorption, analyze six samples at the minimum storage time. Analyze another set of six samples at the maximum storage time.

8.2.1.4 For systems set up in accordance with section 5.2, the number of samples analyzed at the minimum and maximum storage times shall be half those collected (8 or 9). The procedures for samples requiring extraction or digestion should parallel those in section 8.2.1.

8.2.2 *Other Waste Media Testing.* Analyze half of the replicate samples at the minimum storage time and the other half at the maximum storage time in order to identify the effect of storage times on analyte samples.

9. Procedure for Determination of Practical Limit of Quantitation (Optional)

9.1 *Practical Limit of Quantitation.*

9.1.1 The practical limit of quantitation (PLQ) is the lowest level above which quantitative results may be obtained with an acceptable degree of confidence. For this protocol, the PLQ is defined as 10 times the standard deviation, s_o, at the blank level. This PLQ corresponds to an uncertainty of ±30 percent at the 99-percent confidence level.

9.1.2 The PLQ will be used to establish the lower limit of the test method.

9.2 *Procedure I for Estimating* s_o. This procedure is acceptable if the estimated PLQ is no more than twice the calculated PLQ. If the PLQ is greater than twice the calculated PLQ use Procedure II.

9.2.1 Estimate the PLQ and prepare a test standard at this level. The test standard could consist of a dilution of the reference material described in section 3.0.

9.2.2 Using the normal sampling and analytical procedures for the method, sample and analyze this standard at least seven times in the laboratory.

9.2.3 Calculate the standard deviation, s_o, of the measured values.

9.2.4 Calculate the PLQ as 10 times s_o.

9.3 *Procedure II for Estimating* s_o. This procedure is to be used if the estimated PLQ is more than twice the calculated PLQ.

9.3.1 Prepare two additional standards at concentration levels lower than the standard used in Procedure I.

9.3.2 Sample and analyze each of these standards at least seven times.

9.3.3 Calculate the standard deviation for each concentration level.

9.3.4 Plot the standard deviations of the three test standards as a function of the standard concentrations.

9.3.5 Draw a best-fit straight line through the data points and extrapolate to zero concentration. The standard deviation at zero concentration is S_0.

9.3.6 Calculate the PLQ as 10 times S_0.

10.0 Field Validation Report Requirements

The field validation report shall include a discussion of the regulatory objectives for the testing which describe the reasons for the test, applicable emission limits, and a description of the source. In addition, validation results shall include:

10.1 Summary of the results and calculations shown in section 6.0.

10.2 Reference material certification and value(s).

10.3 Performance audit results or letter from the reviewing authority stating the audit material is currently not available.

10.4 Laboratory demonstration of the quality of the spiking system.

10.5 Discussion of laboratory evaluations.

10.6 Discussion of field sampling.

10.7 Discussion of sample preparations and analysis.

10.8 Storage times of samples (and extracts, if applicable).

10.9 Reasons for eliminating any results.

11. Followup Testing

The correction factor calculated in section 6.0 shall be used to adjust the sample concentrations in all followup tests conducted at the same source. These tests shall consist of at least three replicate samples, and the average shall be used to determine the pollutant concentration. The number of samples to be collected and analyzed shall be as follows, depending on the validated method precision level:

11.1 Validated relative standard deviation (RSD) ≤ ±15 Percent. Three replicate samples.

11.2 Validated RSD ≤ ±30 Percent. Six replicate samples.

11.3 Validated RSD ≤ ±50 Percent. Nine replicate samples.

11.4 Equivalent method. Three replicate samples.

12. Procedure for Obtaining a Waiver

12.1 *Waivers*. These procedures may be waived or a less rigorous protocol may be granted for site-specific applications. The following are three example situations for which a waiver may be considered.

12.1.1 *''Similar'' Sources*. If the test method has been validated previously at a ''similar'' source, the procedures may be waived provided the requester can demonstrate to the satisfaction of the Administrator that the sources are ''similar.'' The methods's applicability to the ''similar'' source may be demonstrated by conducting a ruggedness test as described in section 6.0.

12.1.2 *''Documented'' Methods*. In some cases, bias and precision may have been documented through laboratory tests or protocols different from this method. If the analyst can demonstrate to the satisfaction of the Administrator that the bias and precision apply to a particular application, the Administrator may waive these procedures or parts of the procedures.

12.1.3 *''Conditional'' Test Methods*. When the method has been demonstrated to be valid at several sources, the analyst may seek a ''conditional'' method designation from the Administrator. ''Conditional'' method status provides an automatic waiver from the procedures provided the test method is used within the stated applicability.

12.2 *Application for Waiver*. In general, the requester shall provide a thorough description of the test method, the intended application, and results of any validation or other supporting documents. Because of the many potential situations in which the Administrator may grant a waiver, it is neither possible nor desirable to prescribe the exact criteria for a waiver. At a minimum, the requester is responsible for providing the following.

12.2.1 A clearly written test method, preferably in the format of 40 CFR part 60, appendix A Test Methods. The method must include an applicability statement, concentration range, precision, bias (accuracy), and time in which samples must be analyzed.

12.2.2.2 Summaries (see section 10.0) of previous validation tests or other supporting documents. If a different procedure from that described in this method was used, the requester shall provide appropriate documents substantiating (to the satisfaction of the Administrator) the bias and precision values.

12.2.2.3 Results of testing conducted with respect to sections 7.0, 8.0, and 9.0.

12.2.3 Discussion of the applicability statement and arguments for approval of the waiver. This discussion should address as applicable the following: Applicable regulation, emission standards, effluent characteristics, and process operations.

12.3 *Requests for Waiver*. Each request shall be in writing and signed by the analyst. Submit requests to the Director, OAQPS, Technical Support Division, U.S. Environmental Protection Agency, Research Triangle Park, NC 27711.

13. Bibliography

1. Albritton, J.R., G.B. Howe, S.B. Tompkins, R.K.M. Jayanty, and C.E. Decker, 1989. Stability of Parts-Per-Million Organic Cylinder Gases and Results of Source Test Analysis Audits, Status Report No. 11. Environmental Protection Agency Contract 68–02–4125. Research Triangle Institute, Research Triangle Park, NC. September.

2. DeWees, W.G., P.M. Grohse, K.K. Luk, and F.E. Butler. 1989. Laboratory and Field Evaluation of a Methodology for Speciating Nickel Emissions from Stationary Sources. EPA Contract 68–02–4442. Prepared for Atmospheric Research and Environmental Assessment Laboratory, Office of Research and Development, U.S. Environmental Protection Agency, Research Triangle Park, NC 27711. January.

3. Keith, L.H., W. Crummer, J. Deegan Jr., R.A. Libby, J.K. Taylor, and G. Wentler. 1983. Principles of Environmental Analysis. American Chemical Society, Washington, DC.

4. Maxwell, E.A. 1974. Estimating variances from one or two measurements on each sample. Amer. Statistician 28:96–97.

5. Midgett, M.R. 1977. How EPA Validates NSPS Methodology. Environ. Sci. & Technol. 11(7):655–659.

6. Mitchell, W.J., and M.R. Midgett. 1976. Means to evaluate performance of stationary source test methods. Environ. Sci. & Technol. 10:85–88.

7. Plackett, R.L., and J.P. Burman. 1946. The design of optimum multifactorial experiments. Biometrika, 33:305.

8. Taylor, J.K. 1987. Quality Assurance of Chemical Measurements. Lewis Publishers, Inc., pp. 79–81.

9. U.S. Environmental Protection Agency. 1978. Quality Assurance Handbook for Air Pollution Measurement Systems: Volume III. Stationary Source Specific Methods. Publication No. EPA–600/4–77–027b. Office of Research and Development Publications, 26 West St. Clair St., Cincinnati, OH 45268.

10. U.S. Environmental Protection Agency. 1981. A Procedure for Establishing Traceability of Gas Mixtures to Certain National Bureau of Standards Standard Reference Materials. Publication No. EPA–600/7–81–010. Available from the U.S. EPA, Quality Assurance Division (MD–77), Research Triangle Park, NC 27711.

11. U.S. Environmental Protection Agency. 1991. Protocol for The Field Validation of Emission Concentrations From Stationary Sources. Publication No. 450/4–90–015. Available from the U.S. EPA, Emission Measurement Technical Information Center, Technical Support Division (MD–14), Research Triangle Park, NC 27711.

12. Youdon, W.J. Statistical techniques for collaborative tests. In: Statistical Manual of the Association of Official Analytical Chemists, Association of Official Analytical Chemists, Washington, DC, 1975, pp. 33–36.

METHOD 303—DETERMINATION OF VISIBLE EMISSIONS FROM BY-PRODUCT COKE OVEN BATTERIES

NOTE: This method is not inclusive with respect to observer certification. Some material is incorporated by reference from other methods in appendix A to 40 CFR part 60. Therefore, to obtain reliable results, persons using this method should have a thorough knowledge of Method 9.

1.0 Scope and Application

1.1 Applicability. This method is applicable for the determination of visible emissions (VE) from the following by-product coke oven battery sources: charging systems during charging; doors, topside port lids, and offtake systems on operating coke ovens; and collecting mains. This method is also applicable for qualifying observers for visually determining the presence of VE.

2.0 Summary of Method

2.1 A certified observer visually determines the VE from coke oven battery sources. Certification procedures are presented. This method does not require that opacity of emissions be determined or that magnitude be differentiated.

3.0 Definitions

3.1 *Bench* means the platform structure in front of the oven doors.

3.2 *By-product Coke Oven Battery* means a source consisting of a group of ovens connected by common walls, where coal undergoes destructive distillation under positive pressure to produce coke and coke oven gas, from which by-products are recovered.

3.3 *Charge or charging period* means the period of time that commences when coal begins to flow into an oven through a topside port and ends when the last charging port is recapped.

3.4 *Charging system* means an apparatus used to charge coal to a coke oven (*e.g.*, a larry car for wet coal charging systems).

3.5 *Coke oven door* means each end enclosure on the push side and the coking side of an oven. The chuck, or leveler-bar, door is considered part of the push side door. The coke oven door area includes the entire area on the vertical face of a coke oven between the bench and the top of the battery between two adjacent buck stays.

3.6 *Coke side* means the side of a battery from which the coke is discharged from ovens at the end of the coking cycle.

3.7 *Collecting* main means any apparatus that is connected to one or more offtake systems and that provides a passage for conveying gases under positive pressure from the by-product coke oven battery to the by-product recovery system.

3.8 *Consecutive charges* means charges observed successively, excluding any charge during which the observer's view of the charging system or topside ports is obscured.

3.9 *Damper-off* means to close off the gas passage between the coke oven and the collecting main, with no flow of raw coke oven gas from the collecting main into the oven or into the oven's offtake system(s).

3.10 *Decarbonization period* means the period of time for combusting oven carbon that commences when the oven lids are removed from an empty oven or when standpipe caps of an oven are opened. The period ends with the initiation of the next charging period for that oven.

3.11 *Larry car* means an apparatus used to charge coal to a coke oven with a wet coal charging system.

3.12 *Log average* means logarithmic average as calculated in Section 12.4.

3.13 *Offtake system* means any individual oven apparatus that is stationary and provides a passage for gases from an oven to a coke oven battery collecting main or to another oven. Offtake system components include the standpipe and standpipe caps, goosenecks, stationary jumper pipes, ministandpipes, and standpipe and gooseneck connections.

3.14 *Operating oven* means any oven not out of operation for rebuild or maintenance work extensive enough to require the oven to be skipped in the charging sequence.

3.15 *Oven* means a chamber in the coke oven battery in which coal undergoes destructive distillation to produce coke.

3.16 *Push side* means the side of the battery from which the coke is pushed from ovens at the end of the coking cycle.

3.17 *Run* means the observation of visible emissions from topside port lids, offtake systems, coke oven doors, or the charging of a single oven in accordance with this method.

3.18 *Shed* means an enclosure that covers the side of the coke oven battery, captures emissions from pushing operations and from leaking coke oven doors on the coke side or push side of the coke oven battery, and routes the emissions to a control device or system.

3.19 *Standpipe cap* means An apparatus used to cover the opening in the gooseneck of an offtake system.

3.20 *Topside port lid* means a cover, removed during charging or decarbonizing, that is placed over the opening through which coal can be charged into the oven of a by-product coke oven battery.

3.21 *Traverse time* means accumulated time for a traverse as measured by a stopwatch. Traverse time includes time to stop and write down oven numbers but excludes time waiting for obstructions of view to clear or for time to walk around obstacles.

3.22 *Visible Emissions or VE* means any emission seen by the unaided (except for corrective lenses) eye, excluding steam or condensing water.

4.0 Interferences [Reserved]

5.0 Safety

5.1 Disclaimer. This method may involve hazardous materials, operations, and equipment. This test method may not address all of the safety problems associated with its use. It is the responsibility of the user of this test method to establish appropriate safety and health practices and determine the applicability of regulatory limitations prior to performing this test method.

5.2 Safety Training. Because coke oven batteries have hazardous environments, the training materials and the field training (Section 10.0) shall cover the precautions required by the company to address health and safety hazards. Special emphasis shall be given to the Occupational Safety and Health Administration (OSHA) regulations pertaining to exposure of coke oven workers (see Reference 3 in Section 16.0). In general, the regulation requires that special fire-retardant clothing and respirators be worn in certain restricted areas of the coke oven battery. The OSHA regulation also prohibits certain activities, such as chewing gum, smoking, and eating in these areas.

6.0 Equipment and Supplies [Reserved]

7.0 Reagents and Standards [Reserved]

8.0 Sample Collection, Preservation, Transport, and Storage [Reserved]

9.0 Quality Control [Reserved]

10.0 Calibration and Standardization

Observer certification and training requirements are as follows:

10.1 Certification Procedures. This method requires only the determination of whether VE occur and does not require the determination of opacity levels; therefore, observer certification according to Method 9 in appendix A to part 60 of this chapter is not required to obtain certification under this method. However, in order to receive Method 303 observer certification, the first-time observer (trainee) shall have attended the lecture portion of the Method 9 certification course. In addition, the trainee shall successfully complete the Method 303 training course, satisfy the field observation requirement, and demonstrate adequate performance and sufficient knowledge of Method 303. The Method 303 training course shall be conducted by or under the sanction of the EPA and shall consist of classroom instruction and field observations, and a proficiency test.

10.1.1 The classroom instruction shall familiarize the trainees with Method 303 through lecture, written training materials, and a Method 303 demonstration video. A successful completion of the classroom portion of the Method 303 training course shall be demonstrated by a perfect score on a written test. If the trainee fails to answer all of the questions correctly, the trainee may review the appropriate portion of the training materials and retake the test.

10.1.2 The field observations shall be a minimum of 12 hours and shall be completed before attending the Method 303 certification course. Trainees shall observe the operation of a coke oven battery as it pertains to Method 303, including topside operations, and shall also practice conducting Method 303 or similar methods. During the field observations, trainees unfamiliar with coke battery operations shall receive instruction from an experienced coke oven observer familiar with Method 303 or similar methods and with the operation of coke batteries. The trainee must verify completion of at least 12 hours of field observation prior to attending the Method 303 certification course.

10.1.3 All trainees must demonstrate proficiency in the application of Method 303 to a panel of three certified Method 303 observers, including an ability to differentiate coke oven emissions from condensing water vapor and smoldering coal. Each panel member shall have at least 120 days experience in reading visible emissions from coke ovens. The visible emissions inspections that will satisfy the experience requirement must be inspections of coke oven battery fugitive emissions from the emission points subject to emission standards under subpart L of this part (*i.e.*, coke oven doors, topside port lids, offtake system(s), and charging operations), using either Method 303 or predecessor State or local test methods. A ''day's experience'' for a particular inspection is a day on which one complete inspection was performed for that emission point under Method 303 or a predecessor State or local method. A ''day's experience'' does not mean 8 or 10 hours performing inspections, or any particular time expressed in minutes or hours that may have been spent performing them. Thus, it would be possible for an individual to qualify as a Method 303 panel member for some emission points, but not others (*e.g.*, an individual might satisfy the experience requirement for coke oven doors, but not topside port lids). Until November 15, 1994, the EPA may waive the certification requirement (but not the experience requirement) for panel members. The composition of the panel shall be approved by the EPA. The panel shall observe the trainee in a series of training runs and a series of certification runs. There shall be a minimum of 1 training run for doors, topside port lids, and offtake systems, and a minimum of 5 training runs (*i.e.*, 5 charges) for charging. During training runs, the panel can advise the trainee on proper procedures. There shall be a minimum of 3 certification runs for doors, topside port lids, and offtake systems, and a minimum of 15 certification runs for charging (*i.e.*, 15 charges). The certifications runs shall be unassisted. Following the certification test runs, the panel shall approve or disapprove certification based on the trainee's performance during the certification runs. To obtain certification, the trainee shall demonstrate to the satisfaction of the panel a high degree of proficiency in performing Method 303. To aid in evaluating the trainee's performance, a checklist, provided by the EPA, will be used by the panel members.

10.2 Observer Certification/Recertification. The coke oven observer certification is valid for 1 year from date of issue. The observer shall recertify annually by viewing the training video and answering all of the questions on the certification test correctly. Every 3 years, an observer shall be required to pass the proficiency test in Section 10.1.3 in order to be certified.

10.3 The EPA (or applicable enforcement agency) shall maintain records reflecting a certified observer's successful completion of the proficiency test, which shall include the completed proficiency test checklists for the certification runs.

10.4 An owner or operator of a coke oven battery subject to subpart L of this part may observe a training and certification program under this section.

11.0 Procedure

11.1 Procedure for Determining VE from Charging Systems During Charging.

11.1.1 Number of Oven Charges. Refer to § 63.309(c)(1) of this part for the number of oven charges to observe. The observer shall observe consecutive charges. Charges that are nonconsecutive can only be observed when necessary to replace observations terminated prior to the completion of a charge because of visual interferences. (See Section 11.1.5).

11.1.2 Data Records. Record all the information requested at the top of the charging system inspection sheet (Figure 303–1). For each charge, record the identification number of the oven being charged, the approximate beginning time of the charge, and the identification of the larry car used for the charge.

11.1.3 Observer Position. Stand in an area or move to positions on the topside of the coke oven battery with an unobstructed view of the entire charging system. For wet coal charging systems or non-pipeline coal charging systems, the observer should have an unobstructed view of the emission points of the charging system, including larry car hoppers, drop sleeves, and the topside ports of the oven being charged. Some charging systems are configured so that all emission points can only be seen from a distance of five ovens. For other batteries, distances of 8 to 12 ovens are adequate.

11.1.4 Observation. The charging period begins when coal begins to flow into the oven and ends when the last charging port is recapped. During the charging period, observe all of the potential sources of VE from the

entire charging system. For wet coal charging systems or non-pipeline coal charging systems, sources of VE typically include the larry car hoppers, drop sleeves, slide gates, and topside ports on the oven being charged. Any VE from an open standpipe cap on the oven being charged is included as charging VE.

11.1.4.1 Using an accumulative-type stopwatch with unit divisions of at least 0.5 seconds, determine the total time VE are observed as follows. Upon observing any VE emerging from any part of the charging system, start the stopwatch. Stop the watch when VE are no longer observed emerging, and restart the watch when VE reemerges.

11.1.4.2 When VE occur simultaneously from several points during a charge, consider the sources as one. Time overlapping VE as continuous VE. Time single puffs of VE only for the time it takes for the puff to emerge from the charging system. Continue to time VE in this manner for the entire charging period. Record the accumulated time to the nearest 0.5 second under ''Visible emissions, seconds'' on Figure 303–1.

11.1.5 Visual Interference. If fugitive VE from other sources at the coke oven battery site (*e.g.*, door leaks or condensing water vapor from the coke oven wharf) prevent a clear view of the charging system during a charge, stop the stopwatch and make an appropriate notation under ''Comments'' on Figure 303–1. Label the observation an observation of an incomplete charge, and observe another charge to fulfill the requirements of Section 11.1.1.

11.1.6 VE Exemptions. Do not time the following VE:

11.1.6.1 The VE from burning or smoldering coal spilled on top of the oven, topside port lid, or larry car surfaces;

NOTE: The VE from smoldering coal are generally white or gray. These VE generally have a plume of less than 1 meter long. If the observer cannot safely and with reasonable confidence determine that VE are from charging, do not count them as charging emissions.

11.1.6.2 The VE from the coke oven doors or from the leveler bar; or

11.1.6.3 The VE that drift from the top of a larry car hopper if the emissions had already been timed as VE from the drop sleeve.

NOTE: When the slide gate on a larry car hopper closes after the coal has been added to the oven, the seal may not be airtight. On occasions, a puff of smoke observed at the drop sleeves is forced past the slide gate up into the larry car hopper and may drift from the top; time these VE either at the drop sleeves or the hopper. If the larry car hopper does not have a slide gate or the slide gate is left open or partially closed, VE may quickly pass through the larry car hopper without being observed at the drop sleeves and will appear as a strong surge of smoke; time these as charging VE.

11.1.7 Total Time Record. Record the total time that VE were observed for each charging operation in the appropriate column on the charging system inspection sheet.

11.1.8 Determination of Validity of a Set of Observations. Five charging observations (runs) obtained in accordance with this method shall be considered a valid set of observations for that day. No observation of an incomplete charge shall be included in a daily set of observations that is lower than the lowest reading for a complete charge. If both complete and incomplete charges have been observed, the daily set of observations shall include the five highest values observed. Four or three charging observations (runs) obtained in accordance with this method shall be considered a valid set of charging observations only where it is not possible to obtain five charging observations, because visual interferences (see Section 11.1.5) or inclement weather prevent a clear view of the charging system during charging. However, observations from three or four charges that satisfy these requirements shall not be considered a valid set of charging observations if use of such set of observations in a calculation under Section 12.4 would cause the value of A to be less than 145.

11.1.9 Log Average. For each day on which a valid daily set of observations is obtained, calculate the daily 30-day rolling log average of seconds of visible emissions from the charging operation for each battery using these data and the 29 previous valid daily sets of observations, in accordance with Section 12.4.

11.2. Procedure for Determining VE from Coke Oven Door Areas. The intent of this procedure is to determine VE from coke oven door areas by carefully observing the door area from a standard distance while walking at a normal pace.

11.2.1 Number of Runs. Refer to §63.309(c)(1) of this part for the appropriate number of runs.

11.2.2 Battery Traverse. To conduct a battery traverse, walk the length of the battery on the outside of the pusher machine and quench car tracks at a steady, normal walking pace, pausing to make appropriate entries on the door area inspection sheet (Figure 303–2). A single test run consists of two timed traverses, one for the coke side and one for the push side. The walking pace shall be such that the duration of the traverse does not exceed an average of 4 seconds per oven door, excluding time spent moving around stationary obstructions or waiting for other obstructions to move from positions blocking the view of a series of doors. Extra time is allowed for each leak (a maximum of 10 additional seconds for each leaking door) for the observer to make the proper

notation. A walking pace of 3 seconds per oven door has been found to be typical. Record the actual traverse time with a stopwatch.

11.2.2.1 Include in the traverse time only the time spent observing the doors and recording door leaks. To measure actual traverse time, use an accumulative-type stopwatch with unit divisions of 0.5 seconds or less. Exclude interruptions to the traverse and time required for the observer to move to positions where the view of the battery is unobstructed, or for obstructions, such as the door machine, to move from positions blocking the view of a series of doors.

11.2.2.2 Various situations may arise that will prevent the observer from viewing a door or a series of doors. Prior to the door inspection, the owner or operator may elect to temporarily suspend charging operations for the duration of the inspection, so that all of the doors can be viewed by the observer. The observer has two options for dealing with obstructions to view: (a) Stop the stopwatch and wait for the equipment to move or the fugitive emissions to dissipate before completing the traverse; or (b) stop the stopwatch, skip the affected ovens, and move to an unobstructed position to continue the traverse. Restart the stopwatch and continue the traverse. After the completion of the traverse, if the equipment has moved or the fugitive emissions have dissipated, inspect the affected doors. If the equipment is still preventing the observer from viewing the doors, then the affected doors may be counted as not observed. If option (b) is used because of doors blocked by machines during charging operations, then, of the affected doors, exclude the door from the most recently charged oven from the inspection. Record the oven numbers and make an appropriate notation under ''Comments'' on the door area inspection sheet (Figure 303–2).

11.2.2.3 When batteries have sheds to control emissions, conduct the inspection from outside the shed unless the doors cannot be adequately viewed. In this case, conduct the inspection from the bench. Be aware of special safety considerations pertinent to walking on the bench and follow the instructions of company personnel on the required equipment and procedures. If possible, conduct the bench traverse whenever the bench is clear of the door machine and hot coke guide.

11.2.3 Observations. Record all the information requested at the top of the door area inspection sheet (Figure 303–2), including the number of non-operating ovens. Record the clock time at the start of the traverse on each side of the battery. Record which side is being inspected (*i.e.*, coke side or push side). Other information may be recorded at the discretion of the observer, such as the location of the leak (*e.g.*, top of the door, chuck door, etc.), the reason for any interruption of the traverse, or the position of the sun relative to the battery and sky conditions (*e.g.*, overcast, partly sunny, etc.).

11.2.3.1 Begin the test run by starting the stopwatch and traversing either the coke side or the push side of the battery. After completing one side, stop the watch. Complete this procedure on the other side. If inspecting more than one battery, the observer may view the push sides and the coke sides sequentially.

11.2.3.2 During the traverse, look around the entire perimeter of each oven door. The door is considered leaking if VE are detected in the coke oven door area. The coke oven door area includes the entire area on the vertical face of a coke oven between the bench and the top of the battery between two adjacent buck stays (*e.g.*, the oven door, chuck door, between the masonry brick, buck stay or jamb, or other sources). Record the oven number and make the appropriate notation on the door area inspection sheet (Figure 303–2).

NOTE: Multiple VE from the same door area (*e.g.*, VE from both the chuck door and the push side door) are counted as only one emitting door, not as multiple emitting doors.

11.2.3.3 Do not record the following sources as door area VE:

11.2.3.3.1 VE from ovens with doors removed. Record the oven number and make an appropriate notation under ''Comments;''

11.2.3.3.2 VE from ovens taken out of service. The owner or operator shall notify the observer as to which ovens are out of service. Record the oven number and make an appropriate notation under ''Comments;'' or

11.2.3.3.3 VE from hot coke that has been spilled on the bench as a result of pushing.

11.2.4 Criteria for Acceptance. After completing the run, calculate the maximum time allowed to observe the ovens using the equation in Section 12.2. If the total traverse time exceeds T, void the run, and conduct another run to satisfy the requirements of § 63.309(c)(1) of this part.

11.2.5 Percent Leaking Doors. For each day on which a valid observation is obtained, calculate the daily 30-day rolling average for each battery using these data and the 29 previous valid daily observations, in accordance with Section 12.5.

11.3 Procedure for Determining VE from Topside Port Lids and Offtake Systems.

11.3.1 Number of Runs. Refer to § 63.309(c)(1) of this part for the number of runs to be conducted. Simultaneous runs or separate runs for the topside port lids and offtake systems may be conducted.

11.3.2 Battery Traverse. To conduct a topside traverse of the battery, walk the length of the battery at a steady, normal walking pace, pausing only to make appropriate entries on the topside inspection sheet (Figure 303–3). The walking pace shall not exceed an

average rate of 4 seconds per oven, excluding time spent moving around stationary obstructions or waiting for other obstructions to move from positions blocking the view. Extra time is allowed for each leak for the observer to make the proper notation. A walking pace of 3 seconds per oven is typical. Record the actual traverse time with a stopwatch.

11.3.3 Topside Port Lid Observations. To observe lids of the ovens involved in the charging operation, the observer shall wait to view the lids until approximately 5 minutes after the completion of the charge. Record all the information requested on the topside inspection sheet (Figure 303–3). Record the clock time when traverses begin and end. If the observer's view is obstructed during the traverse (*e.g.*, steam from the coke wharf, larry car, etc.), follow the guidelines given in Section 11.2.2.2.

11.3.3.1 To perform a test run, conduct a single traverse on the topside of the battery. The observer shall walk near the center of the battery but may deviate from this path to avoid safety hazards (such as open or closed charging ports, luting buckets, lid removal bars, and topside port lids that have been removed) and any other obstacles. Upon noting VE from the topside port lid(s) of an oven, record the oven number and port number, then resume the traverse. If any oven is dampered-off from the collecting main for decarbonization, note this under ''Comments'' for that particular oven.

NOTE: Count the number of topside ports, not the number of points, exhibiting VE, *i.e.*, if a topside port has several points of VE, count this as one port exhibiting VE.

11.3.3.2 Do not count the following as topside port lid VE:

11.3.3.2.1 VE from between the brickwork and oven lid casing or VE from cracks in the oven brickwork. Note these VE under ''Comments;''

11.3.3.2.2 VE from topside ports involved in a charging operation. Record the oven number, and make an appropriate notation (*e.g.*, not observed because ports open for charging) under ''Comments;''

11.3.3.2.3 Topside ports having maintenance work done. Record the oven number and make an appropriate notation under ''Comments;'' or

11.3.3.2.4 Condensing water from wet-sealing material. Ports with only visible condensing water from wet-sealing material are counted as observed but not as having VE.

11.3.3.2.5 Visible emissions from the flue inspection ports and caps.

11.3.4 Offtake Systems Observations. To perform a test run, traverse the battery as in Section 11.3.3.1. Look ahead and back two to four ovens to get a clear view of the entire offtake system for each oven. Consider visible emissions from the following points as offtake system VE: (a) the flange between the gooseneck and collecting main (''saddle''), (b) the junction point of the standpipe and oven (''standpipe base''), (c) the other parts of the offtake system (*e.g.*, the standpipe cap), and (d) the junction points with ovens and flanges of jumper pipes.

11.3.4.1 Do not stray from the traverse line in order to get a ''closer look'' at any part of the offtake system unless it is to distinguish leaks from interferences from other sources or to avoid obstacles.

11.3.4.2 If the centerline does not provide a clear view of the entire offtake system for each oven (*e.g.*, when standpipes are longer than 15 feet), the observer may conduct the traverse farther from (rather than closer to) the offtake systems.

11.3.4.3 Upon noting a leak from an offtake system during a traverse, record the oven number. Resume the traverse. If the oven is dampered-off from the collecting main for decarbonization and VE are observed, note this under ''Comments'' for that particular oven.

11.3.4.4 If any part or parts of an offtake system have VE, count it as one emitting offtake system. Each stationary jumper pipe is considered a single offtake system.

11.3.4.5 Do not count standpipe caps open for a decarbonization period or standpipes of an oven being charged as source of offtake system VE. Record the oven number and write ''Not observed'' and the reason (*i.e.*, decarb or charging) under ''Comments.''

NOTE: VE from open standpipes of an oven being charged count as charging emissions. All VE from closed standpipe caps count as offtake leaks.

11.3.5 Criteria for Acceptance. After completing the run (allow 2 traverses for batteries with double mains), calculate the maximum time allowed to observe the topside port lids and/or offtake systems using the equation in Section 12.3. If the total traverse time exceeds T, void the run and conduct another run to satisfy the requirements of § 63.309(c)(1) of this part.

11.3.6 In determining the percent leaking topside port lids and percent leaking offtake systems, do not include topside port lids or offtake systems with VE from the following ovens:

11.3.6.1 Empty ovens, including ovens undergoing maintenance, which are properly dampered off from the main.

11.3.6.2 Ovens being charged or being pushed.

11.3.6.3 Up to 3 full ovens that have been dampered off from the main prior to pushing.

11.3.6.4 Up to 3 additional full ovens in the pushing sequence that have been dampered off from the main for offtake system cleaning, for decarbonization, for safety reasons, or when a charging/pushing schedule involves widely separated ovens (e.g., a

Marquard system); or that have been dampered off from the main for maintenance near the end of the coking cycle. Examples of reasons that ovens are dampered off for safety reasons are to avoid exposing workers in areas with insufficient clearance between standpipes and the larry car, or in areas where workers could be exposed to flames or hot gases from open standpipes, and to avoid the potential for removing a door on an oven that is not dampered off from the main.

11.3.7 Percent Leaking Topside Port Lids and Offtake Systems. For each day on which a valid observation is obtained, calculate the daily 30-day rolling average for each battery using these data and the 29 previous valid daily observations, in accordance with Sections 12.6 and 12.7.

11.4 Procedure for Determining VE from Collecting Mains.

11.4.1 Traverse. To perform a test run, traverse both the collecting main catwalk and the battery topside along the side closest to the collecting main. If the battery has a double main, conduct two sets of traverses for each run, i.e., one set for each main.

11.4.2 Data Recording. Upon noting VE from any portion of a collection main, identify the source and approximate location of the source of VE and record the time under ''Collecting main'' on Figure 303–3; then resume the traverse.

11.4.3 Collecting Main Pressure Check. After the completion of the door traverse, the topside port lids, and offtake systems, compare the collecting main pressure during the inspection to the collecting main pressure during the previous 8 to 24 hours. Record the following: (a) the pressure during inspection, (b) presence of pressure deviation from normal operations, and (c) the explanation for any pressure deviation from normal operations, if any, offered by the operators. The owner or operator of the coke battery shall maintain the pressure recording equipment and conduct the quality assurance/quality control (QA/QC) necessary to ensure reliable pressure readings and shall keep the QA/QC records for at least 6 months. The observer may periodically check the QA/QC records to determine their completeness. The owner or operator shall provide access to the records within 1 hour of an observer's request.

12.0 Data Analysis and Calculations

12.1 Nomenclature.

A = 150 or the number of valid observations (runs). The value of A shall not be less than 145, except for purposes of determinations under §63.306(c) (work practice plan implementation) or §63.306(d) (work practice plan revisions) of this part. No set of observations shall be considered valid for such a recalculation that otherwise would not be considered a valid set of observations for a calculation under this paragraph.

D_i = Number of doors on non-operating ovens.

D_{no} = Number of doors not observed.

D_{ob} = Total number of doors observed on operating ovens.

D_t = Total number of oven doors on the battery.

e = 2.72

J = Number of stationary jumper pipes.

L = Number of doors with VE.

L_b = Yard-equivalent reading.

L_s = Number of doors with VE observed from the bench under sheds.

L_y = Number of doors with VE observed from the yard.

L_y = Number of doors with VE observed from the yard on the push side.

ln = Natural logarithm.

N = Total number of ovens in the battery.

N_i = Total number of inoperable ovens.

P_{NO} = Number of ports not observed.

P_{ovn} = Number of ports per oven.

P_{VE} = Number of topside port lids with VE.

PLD = Percent leaking coke oven doors for the test run.

PLL = Percent leaking topside port lids for the run.

PLO = Percent leaking offtake systems.

T = Total time allowed for traverse, seconds.

T_{ovn} = Number of offtake systems (excluding jumper pipes) per oven.

T_{NO} = Number of offtake systems not observed.

T_{VE} = Number of offtake systems with VE.

X_i = Seconds of VE during the ith charge.

Z = Number of topside port lids or offtake systems with VE.

12.2 Criteria for Acceptance for VE Determinations from Coke Oven Door Areas. After completing the run, calculate the maximum time allowed to observe the ovens using the following equation:

$$T = (4 \times D_t) + (10 \times L) \qquad \text{Eq. 303-1}$$

12.3 Criteria for Acceptance for VE Determinations from Topside Port Lids and Offtake Systems. After completing the run (allow 2 traverses for batteries with double mains), calculate the maximum time allowed

to observe the topside port lids and/or offtake systems by the following equation:

$$T = (4 \times N) + (10 \times Z) \qquad \text{Eq. 303-2}$$

12.4 Average Duration of VE from Charging Operations. Use Equation 303–3 to calculate the daily 30-day rolling log average of seconds of visible emissions from the charging operation for each battery using these current day's observations and the 29 previous valid daily sets of observations.

$$\text{logarithmic average} = e^{y} - 1 = \frac{\ln\left(X_1 + 1\right) + \ln\left(X_2 + 1\right) + \ldots \ln\left(X_A + 1\right)}{A} \qquad \text{Eq. 303-3}$$

12.5 Percent Leaking Doors (PLD). Determine the total number of doors for which observations were made on the coke oven battery as follows:

$$D_{ob} = \left(2 \times N\right) - \left(D_i + D_{no}\right) \qquad \text{Eq. 303-4}$$

12.5.1 For each test run (one run includes both the coke side and the push side traverses), sum the number of doors with door area VE. For batteries subject to an approved alternative standard under §63.305 of this part, calculate the push side and the coke side PLD separately.

12.5.2 Calculate percent leaking doors by using Equation 303–5:

$$PLD = \frac{L_y}{D_{ob}} \times 100 \qquad \text{Eq. 303-5}$$

12.5.3 When traverses are conducted from the bench under sheds, calculate the coke side and the push side separately. Use Equation 303–6 to calculate a yard-equivalent reading:

$$L_b = L_s - (N \times 0.06) \qquad \text{Eq. 303-6}$$

If L_b is less than zero, use zero for L_b in Equation 303–7 in the calculation of PLD.

12.5.3.1 Use Equation 303–7 to calculate PLD:

$$PLD = \frac{L_b + L_y}{D_{ob}} \times 100 \qquad \text{Eq. 303-7}$$

Round off PLD to the nearest hundredth of 1 percent and record as the percent leaking coke oven doors for the run.

12.5.3.2 Average Percent Leaking Doors. Use Equation 303–8 to calculate the daily 30-day rolling average percent leaking doors for each battery using these current day's observations and the 29 previous valid daily sets of observations.

$$PLD_{(30\text{-day})} = \frac{\left(PLD_1 + PLD_2 + \ldots + PLD_{30}\right)}{30} \qquad \text{Eq. 303-8}$$

12.6 Topside Port Lids. Determine the percent leaking topside port lids for each run as follows:

$$PLL = \frac{P_{VE}}{P_{ovn}\left(N - N_i\right) - P_{NO}} \times 100 \qquad \text{Eq. 303-9}$$

12.6.1 Round off this percentage to the nearest hundredth of 1 percent and record this percentage as the percent leaking topside port lids for the run.

12.6.2 Average Percent Leaking Topside Port Lids. Use Equation 303–10 to calculate the daily 30-day rolling average percent leaking topside port lids for each battery using these current day's observations and the 29 previous valid daily sets of observations.

$$PLL\ (30\text{-day}) = \frac{\left(PLL_1 + PLL_2 + \ldots + PLL_{30}\right)}{30} \qquad \text{Eq. 303-10}$$

12.7 Offtake Systems. Determine the percent leaking offtake systems for the run as follows:

$$PLO = \frac{T_{VE}}{T_{ovn}\left(N - N_i\right) + J - T_{NO}} \times 100 \qquad \text{Eq. 303-11}$$

12.7.1 Round off this percentage to the nearest hundredth of 1 percent and record this percentage as the percent leaking offtake systems for the run.

12.7.2 Average Percent Leaking Offtake Systems. Use Equation 303–12 to calculate the daily 30-day rolling average percent leaking offtake systems for each battery using these current day's observations and the 29 previous valid daily sets of observations.

$$PLO\ (30\text{-day}) = \frac{\left(PLO_1 + PLO_2 \ldots + PLO_{30}\right)}{30} \qquad \text{Eq. 303-12}$$

13.0 Method Performance. [Reserved]

14.0 Pollution Prevention. [Reserved]

15.0 Waste Management. [Reserved]

16.0 References.

1. Missan, R., and A. Stein. Guidelines for Evaluation of Visible Emissions Certification, Field Procedures, Legal Aspects, and Background Material. U.S. Environmental Protection Agency. EPA Publication No. EPA–340/1–75–007. April 1975.

2. Wohlschlegel, P., and D. E. Wagoner. Guideline for Development of a Quality Assurance Program: Volume IX—Visual Determination of Opacity Emission from Stationary Sources. U.S. Environmental Protection Agency. EPA Publication No. EPA–650/4–74–005i. November 1975.

3. U.S. Occupational Safety and Health Administration. Code of Federal Regulations. Title 29, Chapter XVII, Section 1910.1029(g). Washington, D.C. Government Printing Office. July 1, 1990.

4. U.S. Environmental Protection Agency. National Emission Standards for Hazardous Air Pollutants; Coke Oven Emissions from Wet-Coal Charged By-Product Coke Oven Batteries; Proposed Rule and Notice of Public Hearing. Washington, D.C. FEDERAL REGISTER. Vol. 52, No. 78 (13586). April 23, 1987.

17.0 Tables, Diagrams, Flowcharts, and Validation Data

Company name: _____
Battery no.: _____ Date: _____ Run no.: _____
City, State: _____
Observer name: _____
Company representative(s): _____

Charge No.	Oven No.	Clock time	Visible emissions, seconds	Comments

Figure 303–1. Charging System Inspection

Company name: _____
Battery no.: _____

Date: _____
City, State: _____
Total no. of ovens in battery: _____
Observer name: _____
Certification expiration date: _____
Inoperable ovens: _____
Company representative(s): _____
Traverse time CS: _____
Traverse time PS: _____
Valid run (Y or N): _____

Time traverse started/ completed	PS/CS	Door No.	Comments (No. of blocked doors, interruptions to traverse, *etc.*)

Figure 303–2. Door Area Inspection.

Company name: _____
Battery no.: _____
Date: _____
City, State: _____
Total no. of ovens in battery: _____
Observer name: _____
Certification expiration date: _____
Inoperable ovens: _____
Company representative(s): _____
Total no. of lids: _____
Total no. of offtakes: _____
Total no. of jumper pipes: _____
Ovens not observed: _____
Total traverse time: _____
Valid run (Y or N): _____

Time traverse started/ completed	Type of Inspection (lids, offtakes, collecting main)	Location of VE (Oven #/Port #)	Comments

Time traverse started/ completed	Type of Inspection (lids, offtakes, collecting main)	Location of VE (Oven #/Port #)	Comments

Figure 303–3. Topside Inspection

METHOD 303A—DETERMINATION OF VISIBLE EMISSIONS FROM NONRECOVERY COKE OVEN BATTERIES

NOTE: This method does not include all of the specifications pertaining to observer certification. Some material is incorporated by reference from other methods in this part and in appendix A to 40 CFR Part 60. Therefore, to obtain reliable results, persons using this method should have a thorough knowledge of Method 9 and Method 303.

1.0 Scope and Application

1.1 Applicability. This method is applicable for the determination of visible emissions (VE) from leaking doors at nonrecovery coke oven batteries.

2.0 Summary of Method

2.1 A certified observer visually determines the VE from coke oven battery sources while walking at a normal pace. This method does not require that opacity of emissions be determined or that magnitude be differentiated.

3.0 Definitions

3.1 *Bench* means the platform structure in front of the oven doors.

3.2 *Coke oven door* means each end enclosure on the push side and the coking side of an oven.

3.3 *Coke side* means the side of a battery from which the coke is discharged from ovens at the end of the coking cycle.

3.4 *Nonrecovery coke oven battery* means a source consisting of a group of ovens connected by common walls and operated as a unit, where coal undergoes destructive distillation under negative pressure to produce coke, and which is designed for the combustion of coke oven gas from which by-products are not recovered.

3.5 *Operating oven* means any oven not out of operation for rebuild or maintenance work extensive enough to require the oven to be skipped in the charging sequence.

3.6 *Oven* means a chamber in the coke oven battery in which coal undergoes destructive distillation to produce coke.

3.7 *Push side* means the side of the battery from which the coke is pushed from ovens at the end of the coking cycle.

3.8 *Run* means the observation of visible emissions from coke oven doors in accordance with this method.

3.9 *Shed* means an enclosure that covers the side of the coke oven battery, captures emissions from pushing operations and from leaking coke oven doors on the coke side or push side of the coke oven battery, and routes the emissions to a control device or system.

3.10 *Traverse time* means accumulated time for a traverse as measured by a stopwatch. Traverse time includes time to stop and write down oven numbers but excludes time waiting for obstructions of view to clear or for time to walk around obstacles.

3.11 *Visible Emissions or VE* means any emission seen by the unaided (except for corrective lenses) eye, excluding steam or condensing water.

4.0 Interferences. [Reserved]

5.0 Safety

5.1 Disclaimer. This method may involve hazardous materials, operations, and equipment. This test method may not address all of the safety problems associated with its use. It is the responsibility of the user of this test method to establish appropriate safety and health practices and determine the applicability of regulatory limitations prior to performing this test method.

5.2 Safety Training. Because coke oven batteries have hazardous environments, the training materials and the field training (Section 10.0) shall cover the precautions required by the company to address health and safety hazards. Special emphasis shall be given to the Occupational Safety and Health Administration (OSHA) regulations pertaining to exposure of coke oven workers (see Reference 3 in Section 16.0). In general, the regulation requires that special fire-retardant clothing and respirators be worn in certain restricted areas of the coke oven battery. The OSHA regulation also prohibits certain activities, such as chewing gum, smoking, and eating in these areas.

6.0 Equipment and Supplies. [Reserved]

7.0 Reagents and Standards [Reserved]

8.0 Sample Collection, Preservation, Transport, and Storage. [Reserved]

9.0 Quality Control. [Reserved]

10.0 Calibration and Standardization.

10.1 Training. This method requires only the determination of whether VE occur and does not require the determination of opacity levels; therefore, observer certification according to Method 9 in Appendix A to Part 60 is not required. However, the first-time observer (trainee) shall have attended the lecture portion of the Method 9 certification course. Furthermore, before conducting any VE observations, an observer shall become familiar with nonrecovery coke oven battery operations and with this test method by observing for a minimum of 4 hours the operation of a nonrecovery coke oven battery in the presence of personnel experienced in performing Method 303 assessments.

11.0 Procedure

The intent of this procedure is to determine VE from coke oven door areas by carefully observing the door area while walking at a normal pace.

11.1 Number of Runs. Refer to §63.309(c)(1) of this part for the appropriate number of runs.

11.2 Battery Traverse. To conduct a battery traverse, walk the length of the battery on the outside of the pusher machine and quench car tracks at a steady, normal walking pace, pausing to make appropriate entries on the door area inspection sheet (Figure 303A–1). The walking pace shall be such that the duration of the traverse does not exceed an average of 4 seconds per oven door, excluding time spent moving around stationary obstructions or waiting for other obstructions to move from positions blocking the view of a series of doors. Extra time is allowed for each leak (a maximum of 10 additional seconds for each leaking door) for the observer to make the proper notation. A walking pace of 3 seconds per oven door has been found to be typical. Record the actual traverse time with a stopwatch. A single test run consists of two timed traverses, one for the coke side and one for the push side.

11.2.1 Various situations may arise that will prevent the observer from viewing a door or a series of doors. The observer has two options for dealing with obstructions to view: (a) Wait for the equipment to move or the fugitive emissions to dissipate before completing the traverse; or (b) skip the affected ovens and move to an unobstructed position to continue the traverse. Continue the traverse. After the completion of the traverse, if the equipment has moved or the fugitive emissions have dissipated, complete the traverse by inspecting the affected doors. Record the oven numbers and make an appropriate notation under ''Comments'' on the door area inspection sheet (Figure 303A–1).

NOTE: Extra time incurred for handling obstructions is not counted in the traverse time.

11.2.2 When batteries have sheds to control pushing emissions, conduct the inspection from outside the shed, if the shed allows such observations, or from the bench. Be aware of special safety considerations pertinent to walking on the bench and follow the instructions of company personnel on the required equipment and operations procedures. If possible, conduct the bench traverse whenever the bench is clear of the door machine and hot coke guide.

11.3 Observations. Record all the information requested at the top of the door area inspection sheet (Figure 303A–1), including the number of non-operating ovens. Record which side is being inspected, *i.e.*, coke side or push side. Other information may be recorded at the discretion of the observer, such as the location of the leak (*e.g.*, top of the door), the reason for any interruption of the traverse, or the position of the sun relative to the battery and sky conditions (*e.g.*, overcast, partly sunny, etc.).

11.3.1 Begin the test run by traversing either the coke side or the push side of the battery. After completing one side, traverse the other side.

11.3.2 During the traverse, look around the entire perimeter of each oven door. The door is considered leaking if VE are detected in the coke oven door area. The coke oven door area includes the entire area on the vertical face of a coke oven between the bench and the top of the battery and the adjacent doors on both sides. Record the oven number and make the appropriate notation on the door area inspection sheet (Figure 303A–1).

11.3.3 Do not record the following sources as door area VE:

11.3.3.1 VE from ovens with doors removed. Record the oven number and make an appropriate notation under ''Comments'';

11.3.3.2 VE from ovens where maintenance work is being conducted. Record the oven number and make an appropriate notation under ''Comments''; or

11.3.3.3 VE from hot coke that has been spilled on the bench as a result of pushing.

12.0 Data Analysis and Calculations

Same as Method 303, Section 12.1, 12.2, 12.3, 12.4, and 12.5.

13.0 Method Performance. [Reserved]

14.0 Pollution Prevention. [Reserved]

15.0 Waste Management. [Reserved]

16.0 References

Same as Method 303, Section 16.0.

17.0 Tables, Diagrams, Flowcharts, and Validation Data

Company name: _____
Battery no.: _____
Date: _____
City, State: _____
Total no. of ovens in battery: _____
Observer name: _____
Certification expiration date: _____
Inoperable ovens: _____
Company representative(s): _____
Traverse time CS: _____
Traverse time PS: _____
Valid run (Y or N): _____

Time traverse started/ completed	PS/CS	Door No.	Comments (No. of blocked doors, interruptions to traverse, *etc.*)

Time traverse started/ completed	PS/CS	Door No.	Comments (No. of blocked doors, interruptions to traverse, *etc.*)

Figure 303A–1. Door Area Inspection

METHOD 304A: DETERMINATION OF BIODEGRADATION RATES OF ORGANIC COMPOUNDS (VENT OPTION)

1.0 Scope and Application

1.1 Applicability. This method is applicable for the determination of biodegradation rates of organic compounds in an activated sludge process. The test method is designed to evaluate the ability of an aerobic biological reaction system to degrade or destroy specific components in waste streams. The method may also be used to determine the effects of changes in wastewater composition on operation. The biodegradation rates determined by utilizing this method are not representative of a full-scale system. The rates measured by this method shall be used in conjunction with the procedures listed in appendix C of this part to calculate the fraction emitted to the air versus the fraction biodegraded.

2.0 Summary of Method

2.1 A self-contained benchtop bioreactor system is assembled in the laboratory. A sample of mixed liquor is added and the waste stream is then fed continuously. The benchtop bioreactor is operated under conditions nearly identical to the target full-scale activated sludge process. Bioreactor temperature, dissolved oxygen concentration, average residence time in the reactor, waste composition, biomass concentration, and biomass composition of the full-scale process are the parameters which are duplicated in the benchtop bioreactor. Biomass shall be removed from the target full-scale activated sludge unit and held for no more than 4 hours prior to use in the benchtop bioreactor. If antifoaming agents are used in the full-scale system, they shall also be used in the benchtop bioreactor. The feed flowing into and the effluent exiting the benchtop bioreactor are analyzed to determine the biodegradation rates of the target compounds. The flow rate of the exit vent is used to calculate the concentration of target compounds (utilizing Henry's law) in the exit gas stream. If Henry's law constants for the compounds of interest are not known, this method cannot be used in the determination of the biodegradation rate and Method 304B is the suggested method. The choice of analytical methodology for measuring the compounds of interest at the inlet and outlet to the benchtop bioreactor are left to the discretion of the source, except where validated methods are available.

3.0 Definitions. [Reserved]

4.0 Interferences. [Reserved]

5.0 Safety

5.1 If explosive gases are produced as a byproduct of biodegradation and could realistically pose a hazard, closely monitor headspace concentration of these gases to ensure laboratory safety. Placement of the benchtop bioreactor system inside a laboratory hood is recommended regardless of byproducts produced.

6.0. Equipment and Supplies

NOTE: Figure 304A–1 illustrates a typical laboratory apparatus used to measure biodegradation rates. While the following description refers to Figure 304A–1, the EPA recognizes that alternative reactor configurations, such as alternative reactor shapes and locations of probes and the feed inlet, will also meet the intent of this method. Ensure that the benchtop bioreactor system is self-contained and isolated from the atmosphere (except for the exit vent stream) by leak-checking fittings, tubing, etc.

6.1 Benchtop Bioreactor. The biological reaction is conducted in a biological oxidation reactor of at least 6 liters capacity. The benchtop bioreactor is sealed and equipped with internal probes for controlling and monitoring dissolved oxygen and internal temperature. The top of the reactor is equipped for aerators, gas flow ports, and instrumentation (while ensuring that no leaks to the atmosphere exist around the fittings).

6.2 Aeration gas. Aeration gas is added to the benchtop bioreactor through three diffusers, which are glass tubes that extend to the bottom fifth of the reactor depth. A pure oxygen pressurized cylinder is recommended in order to maintain the specified oxygen concentration. Install a blower (*e.g.*, Diaphragm Type, 15 SCFH capacity) to blow the aeration gas into the reactor diffusers. Measure the aeration gas flow rate with a rotameter (*e.g.*, 0–15 SCFH recommended). The aeration gas will rise through the benchtop bioreactor, dissolving oxygen into the mixture in the process. The aeration gas must provide sufficient agitation to keep the solids in

suspension. Provide an exit for the aeration gas from the top flange of the benchtop bioreactor through a water-cooled (*e.g.*, Allihn-type) vertical condenser. Install the condenser through a gas-tight fitting in the benchtop bioreactor closure. Install a splitter which directs a portion of the gas to an exit vent and the rest of the gas through an air recycle pump back to the benchtop bioreactor. Monitor and record the flow rate through the exit vent at least 3 times per day throughout the day.

6.3 Wastewater Feed. Supply the wastewater feed to the benchtop bioreactor in a collapsible low-density polyethylene container or collapsible liner in a container (*e.g.*, 20 L) equipped with a spigot cap (collapsible containers or liners of other material may be required due to the permeability of some volatile compounds through polyethylene). Obtain the wastewater feed by sampling the wastewater feed in the target process. A representative sample of wastewater shall be obtained from the piping leading to the aeration tank. This sample may be obtained from existing sampling valves at the discharge of the wastewater feed pump, or collected from a pipe discharging to the aeration tank, or by pumping from a well-mixed equalization tank upstream from the aeration tank. Alternatively, wastewater can be pumped continuously to the laboratory apparatus from a bleed stream taken from the equalization tank of the full-scale treatment system.

6.3.1 Refrigeration System. Keep the wastewater feed cool by ice or by refrigeration to 4 °C. If using a bleed stream from the equalization tank, refrigeration is not required if the residence time in the bleed stream is less than five minutes.

6.3.2 Wastewater Feed Pump. The wastewater is pumped from the refrigerated container using a variable-speed peristaltic pump drive equipped with a peristaltic pump head. Add the feed solution to the benchtop bioreactor through a fitting on the top flange. Determine the rate of feed addition to provide a retention time in the benchtop bioreactor that is numerically equivalent to the retention time in the full-scale system. The wastewater shall be fed at a rate sufficient to achieve 90 to 100 percent of the full-scale system residence time.

6.3.3 Treated wastewater feed. The benchtop bioreactor effluent exits at the bottom of the reactor through a tube and proceeds to the clarifier.

6.4 Clarifier. The effluent flows to a separate closed clarifier that allows separation of biomass and effluent (*e.g.*, 2-liter pear-shaped glass separatory funnel, modified by removing the stopcock and adding a 25-mm OD glass tube at the bottom). Benchtop bioreactor effluent enters the clarifier through a tube inserted to a depth of 0.08 m (3 in.) through a stopper at the top of the clarifier. System effluent flows from a tube inserted through the stopper at the top of the clarifier to a drain (or sample bottle when sampling). The underflow from the clarifier leaves from the glass tube at the bottom of the clarifier. Flexible tubing connects this fitting to the sludge recycle pump. This pump is coupled to a variable speed pump drive. The discharge from this pump is returned through a tube inserted in a port on the side of the benchtop bioreactor. An additional port is provided near the bottom of the benchtop bioreactor for sampling the reactor contents. The mixed liquor from the benchtop bioreactor flows into the center of the clarifier. The clarified system effluent separates from the biomass and flows through an exit near the top of the clarifier. There shall be no headspace in the clarifier.

6.5 Temperature Control Apparatus. Capable of maintaining the system at a temperature equal to the temperature of the full-scale system. The average temperature should be maintained within ±2 °C of the set point.

6.5.1 Temperature Monitoring Device. A resistance type temperature probe or a thermocouple connected to a temperature readout with a resolution of 0.1 °C or better.

6.5.2 Benchtop Bioreactor Heater. The heater is connected to the temperature control device.

6.6 Oxygen Control System. Maintain the dissolved oxygen concentration at the levels present in the full-scale system. Target full-scale activated sludge systems with dissolved oxygen concentration below 2 mg/L are required to maintain the dissolved oxygen concentration in the benchtop ioreactor within 0.5 mg/L of the target dissolved oxygen level. Target full-scale activated sludge systems with dissolved oxygen concentration above 2 mg/L are required to maintain the dissolved oxygen concentration in the benchtop bioreactor within 1.5 mg/L of the target dissolved oxygen concentration; however, for target full-scale activated sludge systems with dissolved oxygen concentrations above 2 mg/L, the dissolved oxygen concentration in the benchtop bioreactor may not drop below 1.5 mg/L. If the benchtop bioreactor is outside the control range, the dissolved oxygen is noted and the reactor operation is adjusted.

6.6.1 Dissolved Oxygen Monitor. Dissolved oxygen is monitored with a polarographic probe (gas permeable membrane) connected to a dissolved oxygen meter (*e.g.*, 0 to 15 mg/L, 0 to 50 °C).

6.6.2 Benchtop Bioreactor Pressure Monitor. The benchtop bioreactor pressure is monitored through a port in the top flange of the reactor. This is connected to a gauge control with a span of 13-cm water vacuum to 13-cm water pressure or better. A relay is activated when the vacuum exceeds an adjustable setpoint which opens a solenoid

valve (normally closed), admitting oxygen to the system. The vacuum setpoint controlling oxygen addition to the system shall be set at approximately 2.5 ± 0.5 cm water and maintained at this setting except during brief periods when the dissolved oxygen concentration is adjusted.

6.7 Connecting Tubing. All connecting tubing shall be Teflon or equivalent in impermeability. The only exception to this specification is the tubing directly inside the pump head of the wastewater feed pump, which may be Viton, Silicone or another type of flexible tubing.

NOTE: Mention of trade names or products does not constitute endorsement by the U.S. Environmental Protection Agency.

7.0 Reagents and Standards

7.1 Wastewater. Obtain a representative sample of wastewater at the inlet to the full-scale treatment plant if there is an existing full-scale treatment plant (see section 6.3). If there is no existing full-scale treatment plant, obtain the wastewater sample as close to the point of determination as possible. Collect the sample by pumping the wastewater into the 20-L collapsible container. The loss of volatiles shall be minimized from the wastewater by collapsing the container before filling, by minimizing the time of filling, and by avoiding a headspace in the container after filling. If the wastewater requires the addition of nutrients to support the biomass growth and maintain biomass characteristics, those nutrients are added and mixed with the container contents after the container is filled.

7.2 Biomass. Obtain the biomass or activated sludge used for rate constant determination in the bench-scale process from the existing full-scale process or from a representative biomass culture (*e.g.*, biomass that has been developed for a future full-scale process). This biomass is preferentially obtained from a thickened acclimated mixed liquor sample. Collect the sample either by bailing from the mixed liquor in the aeration tank with a weighted container, or by collecting aeration tank effluent at the effluent overflow weir. Transport the sample to the laboratory within no more than 4 hours of collection. Maintain the biomass concentration in the benchtop bioreactor at the level of the full-scale system +10 percent throughout the sampling period of the test method.

8.0 Sample Collection, Preservation, Storage, and Transport

8.1 Benchtop Bioreactor Operation. Charge the mixed liquor to the benchtop bioreactor, minimizing headspace over the liquid surface to minimize entrainment of mixed liquor in the circulating gas. Fasten the benchtop bioreactor headplate to the reactor over the liquid surface. Maintain the temperature of the contents of the benchtop bioreactor system at the temperature of the target full-scale system, ±2 °C, throughout the testing period. Monitor and record the temperature of the benchtop bioreactor contents at least to the nearest 0.1 °C.

8.1.1 Wastewater Storage. Collect the wastewater sample in the 20-L collapsible container. Store the container at 4 °C throughout the testing period. Connect the container to the benchtop bioreactor feed pump.

8.1.2 Wastewater Flow Rate.

8.1.2.1 The hydraulic residence time of the aeration tank is calculated as the ratio of the volume of the tank (L) to the flow rate (L/min). At the beginning of a test, the container shall be connected to the feed pump and solution shall be pumped to the benchtop bioreactor at the required flow rate to achieve the calculated hydraulic residence time of wastewater in the aeration tank.

$$Q_{test} = Q_{fs} \frac{L}{V_{fs}} \qquad \text{Eq. 304A-1}$$

Where:

Q_{test} = wastewater flow rate (L/min)

Q_{fs} = average flow rate of full-scale process (L/min)

V_{fs} = volume of full-scale aeration tank (L)

8.1.2.2 The target flow rate in the test apparatus is the same as the flow rate in the target full-scale process multiplied by the ratio of benchtop bioreactor volume (e.g., 6 L) to the volume of the full-scale aeration tank. The hydraulic residence time shall be maintained at 90 to 100 percent of the residence time maintained in the full-scale unit. A nominal flow rate is set on the pump based on a pump calibration. Changes in the elasticity of the tubing in the pump head and the accumulation of material in the tubing affect this calibration. The nominal pumping rate shall be changed as necessary based on volumetric flow measurements. Discharge the benchtop bioreactor effluent to a wastewater storage, treatment, or disposal facility, except during sampling or flow measurement periods.

8.1.3 Sludge Recycle Rate. Set the sludge recycle rate at a rate sufficient to prevent

accumulation in the bottom of the clarifier. Set the air circulation rate sufficient to maintain the biomass in suspension.

8.1.4 Benchtop Bioreactor Operation and Maintenance. Temperature, dissolved oxygen concentration, exit vent flow rate, benchtop bioreactor effluent flow rate, and air circulation rate shall be measured and recorded three times throughout each day of benchtop bioreactor operation. If other parameters (such as pH) are measured and maintained in the target full-scale unit, these parameters, where appropriate, shall be monitored and maintained to target full-scale specifications in the benchtop bioreactor. At the beginning of each sampling period (Section 8.2), sample the benchtop bioreactor contents for suspended solids analysis. Take this sample by loosening a clamp on a length of tubing attached to the lower side port. Determine the suspended solids gravimetrically by the Gooch crucible/glass fiber filter method for total suspended solids, in accordance with Standard Methods[3] or equivalent. When necessary, sludge shall be wasted from the lower side port of the benchtop bioreactor, and the volume that is wasted shall be replaced with an equal volume of the reactor effluent. Add thickened activated sludge mixed liquor as necessary to the benchtop bioreactor to increase the suspended solids concentration to the desired level. Pump this mixed liquor to the benchtop bioreactor through the upper side port (Item 24 in Figure 304A–1). Change the membrane on the dissolved oxygen probe before starting the test. Calibrate the oxygen probe immediately before the start of the test and each time the membrane is changed.

8.1.5 Inspection and Correction Procedures. If the feed line tubing becomes clogged, replace with new tubing. If the feed flow rate is not within 5 percent of target flow any time the flow rate is measured, reset pump or check the flow measuring device and measure flow rate again until target flow rate is achieved.

8.2 Test Sampling. At least two and one half hydraulic residence times after the system has reached the targeted specifications shall be permitted to elapse before the first sample is taken. Effluent samples of the clarifier discharge (Item 20 in Figure 304A–1) and the influent wastewater feed are collected in 40-mL septum vials to which two drops of 1:10 hydrochloric acid (HCl) in water have been added. Sample the clarifier discharge directly from the drain line. These samples will be composed of the entire flow from the system for a period of several minutes. Feed samples shall be taken from the feed pump suction line after temporarily stopping the benchtop bioreactor feed, removing a connector, and squeezing the collapsible feed container. Store both influent and effluent samples at 4 °C immediately after collection and analyze within 8 hours of collection.

8.2.1 Frequency of Sampling. During the test, sample and analyze the wastewater feed and the clarifier effluent at least six times. The sampling intervals shall be separated by at least 8 hours. During any individual sampling interval, sample the wastewater feed simultaneously with or immediately after the effluent sample. Calculate the relative standard deviation (RSD) of the amount removed (*i.e.*, effluent concentration—wastewater feed concentration). The RSD values shall be < 15 percent. If an RSD value is > 15 percent, continue sampling and analyzing influent and effluent sets of samples until the RSD values are within specifications.

8.2.2 Sampling After Exposure of System to Atmosphere. If, after starting sampling procedures, the benchtop bioreactor system is exposed to the atmosphere (due to leaks, maintenance, etc.), allow at least one hydraulic residence time to elapse before resuming sampling.

9.0 Quality Control

9.1 Dissolved Oxygen. Fluctuation in dissolved oxygen concentration may occur for numerous reasons, including undetected gas leaks, increases and decreases in mixed liquor suspended solids resulting from cell growth and solids loss in the effluent stream, changes in diffuser performance, cycling of effluent flow rate, and overcorrection due to faulty or sluggish dissolved oxygen probe response. Control the dissolved oxygen concentration in the benchtop bioreactor by changing the proportion of oxygen in the circulating aeration gas. Should the dissolved oxygen concentration drift below the designated experimental condition, bleed a small amount of aeration gas from the system on the pressure side (i.e., immediately upstream of one of the diffusers). This will create a vacuum in the system, triggering the pressure sensitive relay to open the solenoid valve and admit oxygen to the system. Should the dissolved oxygen concentration drift above the designated experimental condition, slow or stop the oxygen input to the system until the dissolved oxygen concentration approaches the correct level.

9.2 Sludge Wasting.

9.2.1 Determine the suspended solids concentration (section 8.1.4) at the beginning of a test, and once per day thereafter during the test. If the test is completed within a two day period, determine the suspended solids concentration after the final sample set is taken. If the suspended solids concentration exceeds the specified concentration, remove a fraction of the sludge from the benchtop bioreactor. The required volume of mixed liquor to remove is determined as follows:

$$V_w = V_r\left(\frac{S_m - S_s}{S_m}\right) \qquad \text{Eq. 304A-2}$$

Where:

V_w is the wasted volume (Liters),
V_r is the volume of the benchtop bioreactor (Liters),
S_m is the measured solids (g/L), and
S_s is the specified solids (g/L).

9.2.2 Remove the mixed liquor from the benchtop bioreactor by loosening a clamp on the mixed liquor sampling tube and allowing the required volume to drain to a graduated flask. Clamp the tube when the correct volume has been wasted. Replace the volume of the liquid wasted by pouring the same volume of effluent back into the benchtop bioreactor. Dispose of the waste sludge properly.

9.3 Sludge Makeup. In the event that the suspended solids concentration is lower than the specifications, add makeup sludge back into the benchtop bioreactor. Determine the amount of sludge added by the following equation:

$$V_w = V_r\left(\frac{S_s - S_m}{S_w}\right) \qquad \text{Eq. 304A-3}$$

Where:

V_w is the volume of sludge to add (Liters),
V_r is the volume of the benchtop bioreactor (Liters),
S_w is the solids in the makeup sludge (g/L),
S_m is the measured solids (g/L), and S_s is the specified solids (g/L).

10.0 Calibration and Standardization

10.1 Wastewater Pump Calibration. Determine the wastewater flow rate by collecting the system effluent for a time period of at least one hour, and measuring the volume with a graduated cylinder. Record the collection time period and volume collected. Determine flow rate. Adjust the pump speed to deliver the specified flow rate.

10.2 Calibration Standards. Prepare calibration standards from pure certified standards in an aqueous medium. Prepare and analyze three concentrations of calibration standards for each target component (or for a mixture of components) in triplicate daily throughout the analyses of the test samples. At each concentration level, a single calibration shall be within 5 percent of the average of the three calibration results. The low and medium calibration standards shall bracket the expected concentration of the effluent (treated) wastewater. The medium and high standards shall bracket the expected influent concentration.

11.0 Analytical Procedures

11.1 Analysis. If the identity of the compounds of interest in the wastewater is not known, a representative sample of the wastewater shall be analyzed in order to identify all of the compounds of interest present. A gas chromatography/mass spectrometry screening method is recommended.

11.1.1 After identifying the compounds of interest in the wastewater, develop and/or use one or more analytical techniques capable of measuring each of those compounds (more than one analytical technique may be required, depending on the characteristics of the wastewater). Test Method 18, found in appendix A of 40 CFR 60, may be used as a guideline in developing the analytical technique. Purge and trap techniques may be used for analysis providing the target components are sufficiently volatile to make this technique appropriate. The limit of quantitation for each compound shall be determined (see reference 1). If the effluent concentration of any target compound is below the limit of quantitation determined for that compound, the operation of the Method 304 unit may be altered to attempt to increase the effluent concentration above the limit of quantitation. Modifications to the method shall be approved prior to the test. The request should be addressed to Method 304 contact, Emissions Measurement Center, Mail Drop 19, U.S. Environmental Protection Agency, Research Triangle Park, NC 27711.

12.0 Data Analysis and Calculations

12.1 Nomenclature. The following symbols are used in the calculations.

C_i = Average inlet feed concentration for a compound of interest, as analyzed (mg/L)
C_o = Average outlet (effluent) concentration for a compound of interest, as analyzed (mg/L)

X = Biomass concentration, mixed liquor suspended solids (g/L)

t = Hydraulic residence time in the benchtop bioreactor (hours)

V = Volume of the benchtop bioreactor (L)

Q = Flow rate of wastewater into the benchtop bioreactor, average (L/hour)

12.2 Residence Time. The hydraulic residence time of the benchtop bioreactor is equal to the ratio of the volume of the benchtop bioreactor (L) to the flow rate (L/h):

$$t = \frac{V}{Q} \qquad \text{Eq. 304A-4}$$

12.3 Rate of Biodegradation. Calculate the rate of biodegradation for each component with the following equation:

$$\text{Rate}\left(\frac{mg}{L-h}\right) = \frac{C_i - C_o}{t} \qquad \text{Eq. 304A-5}$$

12.4 First-Order Biorate Constant. Calculate the first-order biorate constant (K1) for each component with the following equation:

$$K1\left(\frac{L}{g-h}\right) = \frac{C_i - C_o}{t\,C_o\,X} \qquad \text{Eq. 304A-6}$$

12.5 Relative Standard Deviation (RSD). Determine the standard deviation of both the influent and effluent sample concentrations (S) using the following equation:

$$RSD = \frac{100}{\bar{S}}\left(\sum_{i=1}^{n}\frac{\left(S_i - \bar{S}\right)^2}{(n-1)}\right)^{1/2} \qquad \text{Eq. 304A-7}$$

12.6 Determination of Percent Air Emissions and Percent Biodegraded. Use the results from this test method and follow the applicable procedures in appendix C of 40 CFR part 63, entitled, ''Determination of the Fraction Biodegraded (F_{bio}) in a Biological Treatment Unit'' to determine $F_{bio.}$

13.0 Method Performance. [Reserved]

14.0 Pollution Prevention. [Reserved]

15.0 Waste Management. [Reserved]

16.0 References

1. ''Guidelines for data acquisition and data quality evaluation in Environmental Chemistry,'' Daniel MacDoughal, Analytical Chemistry, Volume 52, p. 2242, 1980.

2. Test Method 18, 40 CFR 60, appendix A.

3. Standard Methods for the Examination of Water and Wastewater, 16th Edition, Method 209C, Total Suspended Solids Dried at 103–105 °C, APHA, 1985.

4. Water7, Hazardous Waste Treatment, Storage, and Disposal Facilities (TSDF)—Air Emission Models, U.S. Environmental Protection Agency, EPA–450/3–87–026, Review Draft, November 1989.

5. Chemdat7, Hazardous Waste Treatment, Storage, and Disposal Facilities (TSDF)—Air Emission Models, U.S. Environmental Protection Agency, EPA–450/3–87–026, Review Draft, November 1989.

17.0 Tables, Diagrams, Flowcharts, and Validation Data

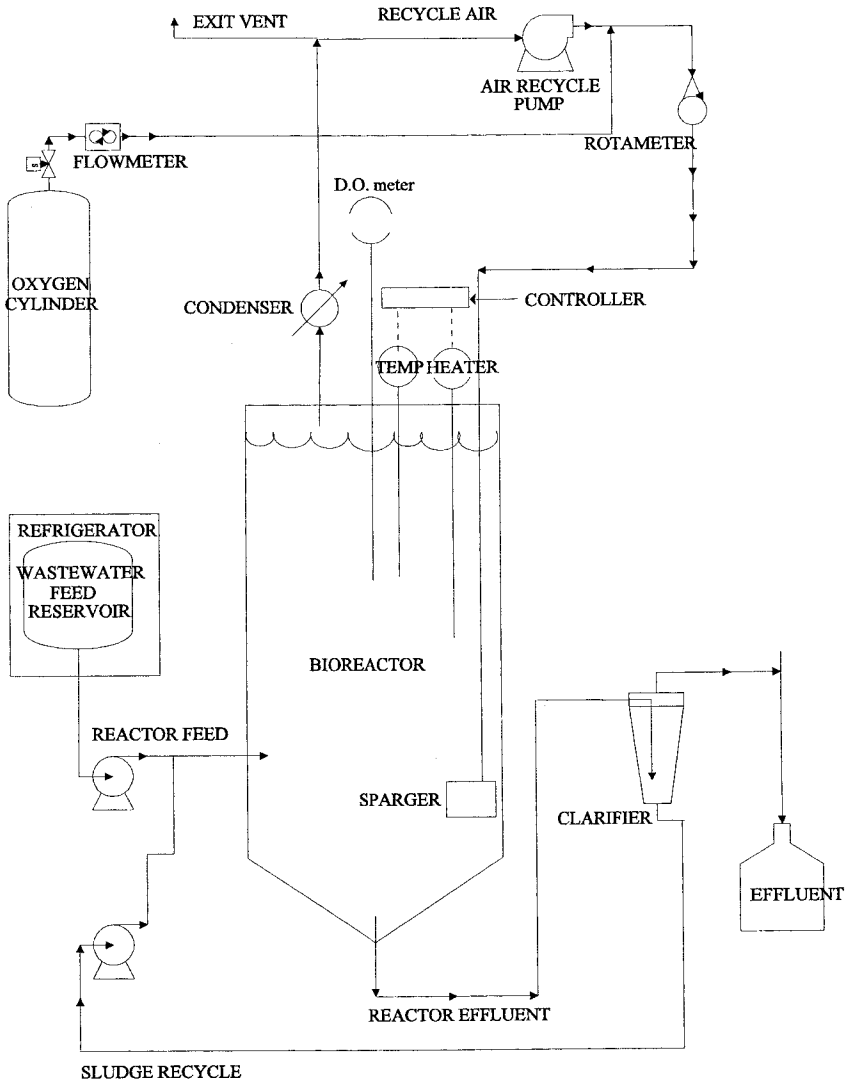

EPA METHOD 304A VENT BIOREACTOR SYSTEM

METHOD 304B: DETERMINATION OF BIODEGRADATION RATES OF ORGANIC COMPOUNDS (SCRUBBER OPTION)

1.0 Scope and Application

1.1 Applicability. This method is applicable for the determination of biodegradation rates of organic compounds in an activated sludge process. The test method is designed to evaluate the ability of an aerobic biological reaction system to degrade or destroy specific components in waste streams. The method may also be used to determine the effects of changes in wastewater composition on operation. The biodegradation rates determined by utilizing this method are not representative of a full-scale system. Full-scale systems embody biodegradation and air

emissions in competing reactions. This method measures biodegradation in absence of air emissions. The rates measured by this method shall be used in conjunction with the procedures listed in appendix C of this part to calculate the fraction emitted to the air versus the fraction biodegraded.

2.0 Summary of Method

2.1 A self-contained benchtop bioreactor system is assembled in the laboratory. A sample of mixed liquor is added and the waste stream is then fed continuously. The benchtop bioreactor is operated under conditions nearly identical to the target full-scale activated sludge process, except that air emissions are not a factor. The benchtop bioreactor temperature, dissolved oxygen concentration, average residence time in the reactor, waste composition, biomass concentration, and biomass composition of the target full-scale process are the parameters which are duplicated in the laboratory system. Biomass shall be removed from the target full-scale activated sludge unit and held for no more than 4 hours prior to use in the benchtop bioreactor. If antifoaming agents are used in the full-scale system, they shall also be used in the benchtop bioreactor. The feed flowing into and the effluent exiting the benchtop bioreactor are analyzed to determine the biodegradation rates of the target compounds. The choice of analytical methodology for measuring the compounds of interest at the inlet and outlet to the benchtop bioreactor are left to the discretion of the source, except where validated methods are available.

3.0 Definitions. [Reserved]

4.0 Interferences. [Reserved]

5.0 Safety

5.1 If explosive gases are produced as a byproduct of biodegradation and could realistically pose a hazard, closely monitor headspace concentration of these gases to ensure laboratory safety. Placement of the benchtop bioreactor system inside a laboratory hood is recommended regardless of byproducts produced.

6.0 Equipment and Supplies

NOTE: Figure 304B–1 illustrates a typical laboratory apparatus used to measure biodegradation rates. While the following description refers to Figure 304B–1, the EPA recognizes that alternative reactor configurations, such as alternative reactor shapes and locations of probes and the feed inlet, will also meet the intent of this method. Ensure that the benchtop bioreactor system is self-contained and isolated from the atmosphere by leak-checking fittings, tubing, etc.

6.1 Benchtop Bioreactor. The biological reaction is conducted in a biological oxidation reactor of at least 6-liters capacity. The benchtop bioreactor is sealed and equipped with internal probes for controlling and monitoring dissolved oxygen and internal temperature. The top of the benchtop bioreactor is equipped for aerators, gas flow ports, and instrumentation (while ensuring that no leaks to the atmosphere exist around the fittings).

6.2 Aeration gas. Aeration gas is added to the benchtop bioreactor through three diffusers, which are glass tubes that extend to the bottom fifth of the reactor depth. A pure oxygen pressurized cylinder is recommended in order to maintain the specified oxygen concentration. Install a blower (*e.g.*, Diaphragm Type, 15 SCFH capacity) to blow the aeration gas into the benchtop bioreactor diffusers. Measure the aeration gas flow rate with a rotameter (*e.g.*, 0–15 SCFH recommended). The aeration gas will rise through the benchtop bioreactor, dissolving oxygen into the mixture in the process. The aeration gas must provide sufficient agitation to keep the solids in suspension. Provide an exit for the aeration gas from the top flange of the benchtop bioreactor through a water-cooled (*e.g.*, Allihn-type) vertical condenser. Install the condenser through a gas-tight fitting in the benchtop bioreactor closure. Design the system so that at least 10 percent of the gas flows through an alkaline scrubber containing 175 mL of 45 percent by weight solution of potassium hydroxide (KOH) and 5 drops of 0.2 percent alizarin yellow dye. Route the balance of the gas through an adjustable scrubber bypass. Route all of the gas through a 1-L knock-out flask to remove entrained moisture and then to the intake of the blower. The blower recirculates the gas to the benchtop bioreactor.

6.3 Wastewater Feed. Supply the wastewater feed to the benchtop bioreactor in a collapsible low-density polyethylene container or collapsible liner in a container (*e.g.*, 20 L) equipped with a spigot cap (collapsible containers or liners of other material may be required due to the permeability of some volatile compounds through polyethylene). Obtain the wastewater feed by sampling the wastewater feed in the target process. A representative sample of wastewater shall be obtained from the piping leading to the aeration tank. This sample may be obtained from existing sampling valves at the discharge of the wastewater feed pump, or collected from a pipe discharging to the aeration tank, or by pumping from a well-mixed equalization tank upstream from the aeration tank. Alternatively, wastewater can be pumped continuously to the laboratory apparatus from a bleed stream taken from the equalization tank of the full-scale treatment system.

6.3.1 Refrigeration System. Keep the wastewater feed cool by ice or by refrigeration to 4 °C. If using a bleed stream from the

equalization tank, refrigeration is not required if the residence time in the bleed stream is less than five minutes.

6.3.2 Wastewater Feed Pump. The wastewater is pumped from the refrigerated container using a variable-speed peristaltic pump drive equipped with a peristaltic pump head. Add the feed solution to the benchtop bioreactor through a fitting on the top flange. Determine the rate of feed addition to provide a retention time in the benchtop bioreactor that is numerically equivalent to the retention time in the target full-scale system. The wastewater shall be fed at a rate sufficient to achieve 90 to 100 percent of the target full-scale system residence time.

6.3.3 Treated wastewater feed. The benchtop bioreactor effluent exits at the bottom of the reactor through a tube and proceeds to the clarifier.

6.4 Clarifier. The effluent flows to a separate closed clarifier that allows separation of biomass and effluent (*e.g.*, 2-liter pear-shaped glass separatory funnel, modified by removing the stopcock and adding a 25-mm OD glass tube at the bottom). Benchtop bioreactor effluent enters the clarifier through a tube inserted to a depth of 0.08 m (3 in.) through a stopper at the top of the clarifier. System effluent flows from a tube inserted through the stopper at the top of the clarifier to a drain (or sample bottle when sampling). The underflow from the clarifier leaves from the glass tube at the bottom of the clarifier. Flexible tubing connects this fitting to the sludge recycle pump. This pump is coupled to a variable speed pump drive. The discharge from this pump is returned through a tube inserted in a port on the side of the benchtop bioreactor. An additional port is provided near the bottom of the benchtop bioreactor for sampling the reactor contents. The mixed liquor from the benchtop bioreactor flows into the center of the clarifier. The clarified system effluent separates from the biomass and flows through an exit near the top of the clarifier. There shall be no headspace in the clarifier.

6.5 Temperature Control Apparatus. Capable of maintaining the system at a temperature equal to the temperature of the full-scale system. The average temperature should be maintained within ±2 °C of the set point.

6.5.1 Temperature Monitoring Device. A resistance type temperature probe or a thermocouple connected to a temperature readout with a resolution of 0.1 °C or better.

6.5.2 Benchtop Bioreactor Heater. The heater is connected to the temperature control device.

6.6 Oxygen Control System. Maintain the dissolved oxygen concentration at the levels present in the full-scale system. Target full-scale activated sludge systems with dissolved oxygen concentration below 2 mg/L are required to maintain the dissolved oxygen concentration in the benchtop bioreactor within 0.5 mg/L of the target dissolved oxygen level. Target full-scale activated sludge systems with dissolved oxygen concentration above 2 mg/L are required to maintain the dissolved oxygen concentration in the benchtop bioreactor within 1.5 mg/L of the target dissolved oxygen concentration; however, for target full-scale activated sludge systems with dissolved oxygen concentrations above 2 mg/L, the dissolved oxygen concentration in the benchtop bioreactor may not drop below 1.5 mg/L. If the benchtop bioreactor is outside the control range, the dissolved oxygen is noted and the reactor operation is adjusted.

6.6.1 Dissolved Oxygen Monitor. Dissolved oxygen is monitored with a polarographic probe (gas permeable membrane) connected to a dissolved oxygen meter (*e.g.*, 0 to 15 mg/L, 0 to 50 °C).

6.6.2 Benchtop Bioreactor Pressure Monitor. The benchtop bioreactor pressure is monitored through a port in the top flange of the reactor. This is connected to a gauge control with a span of 13-cm water vacuum to 13-cm water pressure or better. A relay is activated when the vacuum exceeds an adjustable setpoint which opens a solenoid valve (normally closed), admitting oxygen to the system. The vacuum setpoint controlling oxygen addition to the system shall be set at approximately 2.5 ± 0.5 cm water and maintained at this setting except during brief periods when the dissolved oxygen concentration is adjusted.

6.7 Connecting Tubing. All connecting tubing shall be Teflon or equivalent in impermeability. The only exception to this specification is the tubing directly inside the pump head of the wastewater feed pump, which may be Viton, Silicone or another type of flexible tubing.

NOTE: Mention of trade names or products does not constitute endorsement by the U.S. Environmental Protection Agency.

7.0. Reagents and Standards

7.1 Wastewater. Obtain a representative sample of wastewater at the inlet to the full-scale treatment plant if there is an existing full-scale treatment plant (See Section 6.3). If there is no existing full-scale treatment plant, obtain the wastewater sample as close to the point of determination as possible. Collect the sample by pumping the wastewater into the 20-L collapsible container. The loss of volatiles shall be minimized from the wastewater by collapsing the container before filling, by minimizing the time of filling, and by avoiding a headspace in the container after filling. If the wastewater requires the addition of nutrients to support the biomass growth and maintain biomass characteristics, those nutrients are added and mixed with the container contents after the container is filled.

7.2 Biomass. Obtain the biomass or activated sludge used for rate constant determination in the bench-scale process from the existing full-scale process or from a representative biomass culture (*e.g.*, biomass that has been developed for a future full-scale process). This biomass is preferentially obtained from a thickened acclimated mixed liquor sample. Collect the sample either by bailing from the mixed liquor in the aeration tank with a weighted container, or by collecting aeration tank effluent at the effluent overflow weir. Transport the sample to the laboratory within no more than 4 hours of collection. Maintain the biomass concentration in the benchtop bioreactor at the level of the target full-scale system +10 percent throughout the sampling period of the test method.

8.0 Sample Collection, Preservation, Storage, and Transport

8.1 Benchtop Bioreactor Operation. Charge the mixed liquor to the benchtop bioreactor, minimizing headspace over the liquid surface to minimize entrainment of mixed liquor in the circulating gas. Fasten the benchtop bioreactor headplate to the reactor over the liquid surface. Maintain the temperature of the contents of the benchtop bioreactor system at the temperature of the target full-scale system, ±2 °C, throughout the testing period. Monitor and record the temperature of the reactor contents at least to the nearest 0.1 °C.

8.1.1 Wastewater Storage. Collect the wastewater sample in the 20-L collapsible container. Store the container at 4 °C throughout the testing period. Connect the container to the benchtop bioreactor feed pump.

8.1.2 Wastewater Flow Rate.

8.1.2.1 The hydraulic residence time of the aeration tank is calculated as the ratio of the volume of the tank (L) to the flow rate (L/min). At the beginning of a test, the container shall be connected to the feed pump and solution shall be pumped to the benchtop bioreactor at the required flow rate to achieve the calculated hydraulic residence time of wastewater in the aeration tank.

$$Q_{test} = Q_{fs} \frac{L}{V_{fs}} \qquad \text{Eq. 304B-1}$$

Where:

Q_{test} = wastewater flow rate (L/min)

Q_{fs} = average flow rate of full-scale process (L/min)

V_{fs} = volume of full-scale aeration tank (L)

8.1.2.2 The target flow rate in the test apparatus is the same as the flow rate in the target full-scale process multiplied by the ratio of benchtop bioreactor volume (*e.g.*, 6 L) to the volume of the full-scale aeration tank. The hydraulic residence time shall be maintained at 90 to 100 percent of the residence time maintained in the target full-scale unit. A nominal flow rate is set on the pump based on a pump calibration. Changes in the elasticity of the tubing in the pump head and the accumulation of material in the tubing affect this calibration. The nominal pumping rate shall be changed as necessary based on volumetric flow measurements. Discharge the benchtop bioreactor effluent to a wastewater storage, treatment, or disposal facility, except during sampling or flow measurement periods.

8.1.3 Sludge Recycle Rate. Set the sludge recycle rate at a rate sufficient to prevent accumulation in the bottom of the clarifier. Set the air circulation rate sufficient to maintain the biomass in suspension.

8.1.4 Benchtop Bioreactor Operation and Maintenance. Temperature, dissolved oxygen concentration, flow rate, and air circulation rate shall be measured and recorded three times throughout each day of testing. If other parameters (such as pH) are measured and maintained in the target full-scale unit, these parameters shall, where appropriate, be monitored and maintained to full-scale specifications in the benchtop bioreactor. At the beginning of each sampling period (section 8.2), sample the benchtop bioreactor contents for suspended solids analysis. Take this sample by loosening a clamp on a length of tubing attached to the lower side port. Determine the suspended solids gravimetrically by the Gooch crucible/glass fiber filter method for total suspended solids, in accordance with Standard Methods[3] or equivalent. When necessary, sludge shall be wasted from the lower side port of the benchtop bioreactor, and the volume that is wasted shall be replaced with an equal volume of the benchtop bioreactor effluent. Add thickened activated sludge mixed liquor as necessary to the benchtop bioreactor to increase the suspended solids concentration to the desired level. Pump this mixed liquor to the benchtop bioreactor through the upper side port (Item 24 in Figure 304B–1). Change the membrane on the dissolved oxygen probe before starting the test. Calibrate the oxygen probe immediately before the start of the test and each time the membrane is changed.

The scrubber solution shall be replaced each weekday with 175 mL 45 percent W/W KOH solution to which five drops of 0.2 percent alizarin yellow indicator in water have been added. The potassium hydroxide solution in the alkaline scrubber shall be changed if the alizarin yellow dye color changes.

8.1.5 Inspection and Correction Procedures. If the feed line tubing becomes clogged, replace with new tubing. If the feed flow rate is not within 5 percent of target flow any time the flow rate is measured, reset pump or check the flow measuring device and measure flow rate again until target flow rate is achieved.

8.2 Test Sampling. At least two and one half hydraulic residence times after the system has reached the targeted specifications shall be permitted to elapse before the first sample is taken. Effluent samples of the clarifier discharge (Item 20 in Figure 304B–1) and the influent wastewater feed are collected in 40-mL septum vials to which two drops of 1:10 hydrochloric acid (HCl) in water have been added. Sample the clarifier discharge directly from the drain line. These samples will be composed of the entire flow from the system for a period of several minutes. Feed samples shall be taken from the feed pump suction line after temporarily stopping the benchtop bioreactor feed, removing a connector, and squeezing the collapsible feed container. Store both influent and effluent samples at 4 °C immediately after collection and analyze within 8 hours of collection.

8.2.1 Frequency of Sampling. During the test, sample and analyze the wastewater feed and the clarifier effluent at least six times. The sampling intervals shall be separated by at least 8 hours. During any individual sampling interval, sample the wastewater feed simultaneously with or immediately after the effluent sample. Calculate the RSD of the amount removed (*i.e.*, effluent concentration—wastewater feed concentration). The RSD values shall be <15 percent. If an RSD value is >15 percent, continue sampling and analyzing influent and effluent sets of samples until the RSD values are within specifications.

8.2.2 Sampling After Exposure of System to Atmosphere. If, after starting sampling procedures, the benchtop bioreactor system is exposed to the atmosphere (due to leaks, maintenance, etc.), allow at least one hydraulic residence time to elapse before resuming sampling.

9.0 Quality Control

9.1 Dissolved Oxygen. Fluctuation in dissolved oxygen concentration may occur for numerous reasons, including undetected gas leaks, increases and decreases in mixed liquor suspended solids resulting from cell growth and solids loss in the effluent stream, changes in diffuser performance, cycling of effluent flow rate, and overcorrection due to faulty or sluggish dissolved oxygen probe response. Control the dissolved oxygen concentration in the benchtop bioreactor by changing the proportion of oxygen in the circulating aeration gas. Should the dissolved oxygen concentration drift below the designated experimental condition, bleed a small amount of aeration gas from the system on the pressure side (*i.e.*, immediately upstream of one of the diffusers). This will create a vacuum in the system, triggering the pressure sensitive relay to open the solenoid valve and admit oxygen to the system. Should the dissolved oxygen concentration drift above the designated experimental condition, slow or stop the oxygen input to the system until the dissolved oxygen concentration approaches the correct level.

9.2 Sludge Wasting.

9.2.1 Determine the suspended solids concentration (section 8.1.4) at the beginning of a test, and once per day thereafter during the test. If the test is completed within a two day period, determine the suspended solids concentration after the final sample set is taken. If the suspended solids concentration exceeds the specified concentration, remove a fraction of the sludge from the benchtop bioreactor. The required volume of mixed liquor to remove is determined as follows:

$$V_w = V_r\left(\frac{S_m - S_s}{S_m}\right) \qquad \text{Eq. 304B-2}$$

Where:

V_w is the wasted volume (Liters),

V_r is the volume of the benchtop bioreactor (Liters),

S_m is the measured solids (g/L), and

S_s is the specified solids (g/L).

9.2.2 Remove the mixed liquor from the benchtop bioreactor by loosening a clamp on the mixed liquor sampling tube and allowing the required volume to drain to a graduated flask. Clamp the tube when the correct volume has been wasted. Replace the volume of

the liquid wasted by pouring the same volume of effluent back into the benchtop bioreactor. Dispose of the waste sludge properly.

9.3 Sludge Makeup. In the event that the suspended solids concentration is lower than the specifications, add makeup sludge back into the benchtop bioreactor. Determine the amount of sludge added by the following equation:

$$V_w = V_r\left(\frac{S_s - S_m}{S_w}\right) \qquad \text{Eq. 304B-3}$$

Where:

V_w is the volume of sludge to add (Liters),
V_r is the volume of the benchtop bioreactor (Liters),
S_w is the solids in the makeup sludge (g/L),
S_m is the measured solids (g/L), and
S_s is the specified solids (g/L).

10.0 Calibration and Standardizations

10.1 Wastewater Pump Calibration. Determine the wastewater flow rate by collecting the system effluent for a time period of at least one hour, and measuring the volume with a graduated cylinder. Record the collection time period and volume collected. Determine flow rate. Adjust the pump speed to deliver the specified flow rate.

10.2 Calibration Standards. Prepare calibration standards from pure certified standards in an aqueous medium. Prepare and analyze three concentrations of calibration standards for each target component (or for a mixture of components) in triplicate daily throughout the analyses of the test samples. At each concentration level, a single calibration shall be within 5 percent of the average of the three calibration results. The low and medium calibration standards shall bracket the expected concentration of the effluent (treated) wastewater. The medium and high standards shall bracket the expected influent concentration.

11.0 Analytical Test Procedures

11.1 Analysis. If the identity of the compounds of interest in the wastewater is not known, a representative sample of the wastewater shall be analyzed in order to identify all of the compounds of interest present. A gas chromatography/mass spectrometry screening method is recommended.

11.1.1 After identifying the compounds of interest in the wastewater, develop and/or use one or more analytical technique capable of measuring each of those compounds (more than one analytical technique may be required, depending on the characteristics of the wastewater). Method 18, found in appendix A of 40 CFR 60, may be used as a guideline in developing the analytical technique. Purge and trap techniques may be used for analysis providing the target components are sufficiently volatile to make this technique appropriate. The limit of quantitation for each compound shall be determined.[1] If the effluent concentration of any target compound is below the limit of quantitation determined for that compound, the operation of the Method 304 unit may be altered to attempt to increase the effluent concentration above the limit of quantitation. Modifications to the method shall be approved prior to the test. The request should be addressed to Method 304 contact, Emissions Measurement Center, Mail Drop 19, U.S. Environmental Protection Agency, Research Triangle Park, NC 27711.

12.0 Data Analysis and Calculations

12.1 Nomenclature. The following symbols are used in the calculations.

C_i = Average inlet feed concentration for a compound of interest, as analyzed (mg/L)
C_o = Average outlet (effluent) concentration for a compound of interest, as analyzed (mg/L)
X = Biomass concentration, mixed liquor suspended solids (g/L)
t = Hydraulic residence time in the benchtop bioreactor (hours)
V = Volume of the benchtop bioreactor (L)
Q = Flow rate of wastewater into the benchtop bioreactor, average (L/hour)

12.2 Residence Time. The hydraulic residence time of the benchtop bioreactor is equal to the ratio of the volume of the benchtop bioreactor (L) to the flow rate (L/h)

$$t = \frac{V}{Q} \qquad \text{Eq. 304B-4}$$

12.3 Rate of Biodegradation. Calculate the rate of biodegradation for each component with the following equation:

$$\text{Rate}\left(\frac{mg}{L-h}\right)=\frac{C_i-C_o}{t} \qquad \text{Eq. 304B-5}$$

12.4 First-Order Biorate Constant. Calculate the first-order biorate constant (K1) for each component with the following equation:

$$K1\left(\frac{L}{g-h}\right)=\frac{C_i-C_o}{tC_oX} \qquad \text{Eq. 304B-6}$$

12.5 Relative Standard Deviation (RSD). Determine the standard deviation of both the influent and effluent sample concentrations (S) using the following equation:

$$RSD=\frac{100}{\overline{S}}\left(\sum_{i=1}^{n}\frac{\left(S_i-\overline{S}\right)^2}{(n-1)}\right)^{1/2} \qquad \text{Eq. 304B-7}$$

12.6 Determination of Percent Air Emissions and Percent Biodegraded. Use the results from this test method and follow the applicable procedures in appendix C of 40 CFR Part 63, entitled, ''Determination of the Fraction Biodegraded (F_{bio}) in a Biological Treatment Unit'' to determine $F_{bio.}$

13.0 Method Performance. [Reserved]

14.0 Pollution Prevention. [Reserved]

15.0 Waste Management. [Reserved]

16.0 References

1. ''Guidelines for data acquisition and data quality evaluation in Environmental Chemistry'', Daniel MacDoughal, Analytical Chemistry, Volume 52, p. 2242, 1980.

2. Test Method 18, 40 CFR 60, Appendix A.

3. Standard Methods for the Examination of Water and Wastewater, 16th Edition, Method 209C, Total Suspended Solids Dried at 103–105 °C, APHA, 1985.

4. Water—7, Hazardous Waste Treatment, Storage, and Disposal Facilities (TSDF)—Air Emission Models, U.S. Environmental Protection Agency, EPA–450/3–87–026, Review Draft, November 1989.

5. Chemdat7, Hazardous Waste Treatment, Storage, and Disposal Facilities (TSDF)—Air Emission Models, U.S. Environmental Protection Agency, EPA–450/3–87–026, Review Draft, November 1989.

17.0 Tables, Diagrams, Flowcharts, and Validation Data

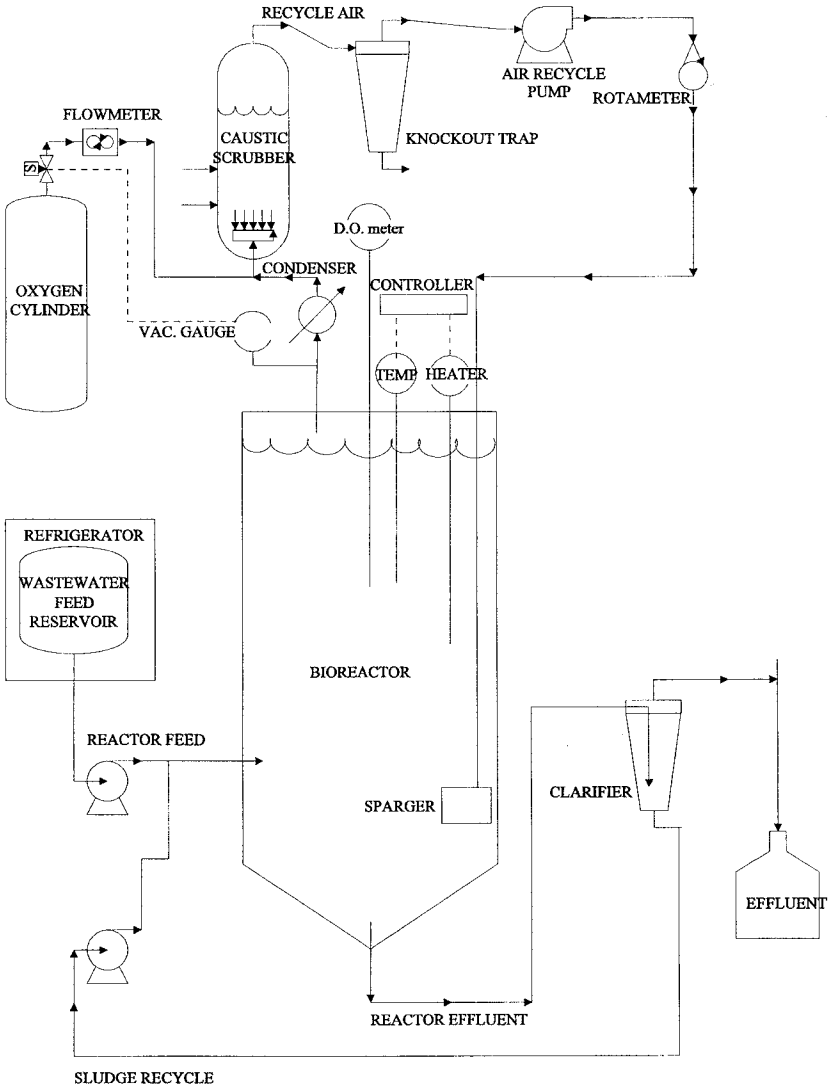

EPA METHOD 304B BIOREACTOR SYSTEM

METHOD 305: MEASUREMENT OF EMISSION POTENTIAL OF INDIVIDUAL VOLATILE ORGANIC COMPOUNDS IN WASTE

NOTE: This method does not include all of the specifications (*e.g.*, equipment and supplies) and procedures (*e.g.*, sampling and analytical) essential to its performance. Some material is incorporated by reference from other methods in 40 CFR Part 60, Appendix A. Therefore, to obtain reliable results, persons using this method should have a thorough knowledge of at least Method 25D.

1.0 Scope and Application

1.1 Analyte. Volatile Organics. No CAS No. assigned.

1.2 Applicability. This procedure is used to determine the emission potential of individual volatile organics (VOs) in waste.

1.3 Data Quality Objectives. Adherence to the requirements of this method will enhance the quality of the data obtained from air pollutant sampling methods.

2.0 Summary of Method

2.1 The heated purge conditions established by Method 25D (40 CFR Part 60, Appendix A) are used to remove VOs from a 10 gram sample of waste suspended in a 50/50 solution of polyethylene glycol (PEG) and water. The purged VOs are quantified by using the sample collection and analytical techniques (*e.g.* gas chromatography) appropriate for the VOs present in the waste. The recovery efficiency of the sample collection and analytical technique is determined for each waste matrix. A correction factor is determined for each compound (if acceptable recovery criteria requirements are met of 70 to 130 percent recovery for every target compound), and the measured waste concentration is corrected with the correction factor for each compound. A minimum of three replicate waste samples shall be analyzed.

3.0 Definitions. [Reserved]

4.0 Interferences. [Reserved]

5.0 Safety

5.1 Disclaimer. This method may involve hazardous materials, operations, and equipment. This test method may not address all of the safety problems associated with its use. It is the responsibility of the user of this test method to establish appropriate safety and health practices and to determine the applicability of regulatory limitations prior to performing this test method.

6.0 Equipment and Supplies

6.1 Method 25D Purge Apparatus.

6.1.1 Purge Chamber. The purge chamber shall accommodate the 10 gram sample of waste suspended in a matrix of 50 mL of PEG and 50 mL of deionized, hydrocarbon-free water. Three fittings are used on the glass chamber top. Two #7 Ace-threads are used for the purge gas inlet and outlet connections. A #50 Ace-thread is used to connect the top of the chamber to the base (see Figure 305–1). The base of the chamber has a side-arm equipped with a #22 Sovirel fitting to allow for easy sample introductions into the chamber. The dimensions of the chamber are shown in Figure 305–1.

6.1.2 Flow Distribution Device (FDD). The FDD enhances the gas-to-liquid contact for improved purging efficiency. The FDD is a 6 mm OD (0.2 in) by 30 cm (12 in) long glass tube equipped with four arm bubblers as shown in Figure 305–1. Each arm shall have an opening of 1 mm (0.04 in) in diameter.

6.1.3 Coalescing Filter. The coalescing filter serves to discourage aerosol formation of sample gas once it leaves the purge chamber. The glass filter has a fritted disc mounted 10 cm (3.9 in) from the bottom. Two #7 Ace-threads are used for the inlet and outlet connections. The dimensions of the chamber are shown in Figure 305–2.

6.1.4 Oven. A forced convection airflow oven capable of maintaining the purge chamber and coalescing filter at 75 ± 2 °C (167 ± 3.6 °F).

6.1.5 Toggle Valve. An on/off valve constructed from brass or stainless steel rated to 100 psig. This valve is placed in line between the purge nitrogen source and the flow controller.

6.1.6 Flow Controller. High-quality stainless steel flow controller capable of restricting a flow of nitrogen to 6 ± 0.06 L/min (0.2 ± 0.002 ft^3/min) at 40 psig.

6.1.7 Polyethylene Glycol Cleaning System.

6.1.7.1 Round-Bottom Flask. One liter, three-neck glass round-bottom flask for cleaning PEG. Standard taper 24/40 joints are mounted on each neck.

6.1.7.2 Heating Mantle. Capable of heating contents of the 1-L flask to 120 °C (248 °F).

6.1.7.3 Nitrogen Bubbler. Teflon® or glass tube, 0.25 in OD (6.35 mm).

6.1.7.4 Temperature Sensor. Partial immersion glass thermometer.

6.1.7.5 Hose Adapter. Glass with 24/40 standard tapered joint.

6.2 Volatile Organic Recovery System.

6.2.1 Splitter Valve (Optional). Stainless steel cross-pattern valve capable of splitting nominal flow rates from the purge flow of 6 L/min (0.2 ft^3/min). The valve shall be maintained at 75 + 2 °C (167 ± 3.6 °F) in the heated zone and shall be placed downstream of the coalescing filter. It is recommended that 0.125 in OD (3.175 mm) tubing be used to direct the split vent flow from the heated zone. The back pressure caused by the 0.125 in OD (3.175 mm) tubing is critical for maintaining proper split valve operation.

NOTE: The splitter valve design is optional; it may be used in cases where the concentration of a pollutant would saturate the adsorbents.

6.2.2 Injection Port. Stainless steel 1/4 in OD (6.35 mm) compression fitting tee with a 6 mm (0.2 in) septum fixed on the top port. The injection port is the point of entry for the recovery study solution. If using a gaseous standard to determine recovery efficiency, connect the gaseous standard to the injection port of the tee.

6.2.3 Knockout Trap (Optional but Recommended). A 25 mL capacity glass reservoir body with a full-stem impinger (to avoid leaks, a modified midget glass impinger with a screw cap and ball/socket clamps on the inlet and outlet is recommended). The empty

impinger is placed in an ice water bath between the injection port and the sorbent cartridge. Its purpose is to reduce the water content of the purge gas (saturated at 75 °C (167 °F)) before the sorbent cartridge.

6.2.4 Insulated Ice Bath. A 350 mL dewar or other type of insulated bath is used to maintain ice water around the knockout trap.

6.2.5 Sorbent Cartridges. Commercially available glass or stainless steel cartridge packed with one or more appropriate sorbents. The amount of adsorbent packed in the cartridge depends on the breakthrough volume of the test compounds but is limited by back pressure caused by the packing (not to exceed 7 psig). More than one sorbent cartridge placed in series may be necessary depending upon the mixture of the measured components.

6.2.6 Volumetric Glassware. Type A glass 10 mL volumetric flasks for measuring a final volume from the water catch in the knockout trap.

6.2.7 Thermal Desorption Unit. A clamshell type oven, used for the desorption of direct thermal desorption sorbent tubes. The oven shall be capable of increasing the temperature of the desorption tubes rapidly to recommended desorption temperature.

6.2.8 Ultrasonic Bath. Small bath used to agitate sorbent material and desorption solvent. Ice water shall be used in the bath because of heat transfer caused by operation of the bath.

6.2.9 Desorption Vials. Four-dram (15 mL) capacity borosilicate glass vials with Teflon-lined caps.

6.3 Analytical System. A gas chromatograph (GC) is commonly used to separate and quantify compounds from the sample collection and recovery procedure. Method 18 (40 CFR Part 60, Appendix A) may be used as a guideline for determining the appropriate GC column and GC detector based on the test compounds to be determined. Other types of analytical instrumentation may be used (HPLC) in lieu of GC systems as long as the recovery efficiency criteria of this method are met.

6.3.1 Gas Chromatograph (GC). The GC shall be equipped with a constant-temperature liquid injection port or a heated sampling loop/valve system, as appropriate. The GC oven shall be temperature-programmable over the useful range of the GC column. The choice of detectors is based on the test compounds to be determined.

6.3.2 GC Column. Select the appropriate GC column based on (1) literature review or previous experience, (2) polarity of the analytes, (3) capacity of the column, or (4) resolving power (*e.g.*, length, diameter, film thickness) required.

6.3.3 Data System. A programmable electronic integrator for recording, analyzing, and storing the signal generated by the detector.

7.0 Reagents and Standards

7.1 Method 25D Purge Apparatus.

7.1.1 Polyethylene Glycol (PEG). Ninety-eight percent pure organic polymer with an average molecular weight of 400 g/mol. Volatile organics are removed from the PEG prior to use by heating to 120 ± 5 °C (248 ± 9 °F) and purging with pure nitrogen at 1 L/min (0.04 ft^3/min) for 2 hours. After purging and heating, the PEG is maintained at room temperature under a nitrogen purge maintained at 1 L/min (0.04 ft^3/min) until used. A typical apparatus used to clean the PEG is shown in Figure 305–3.

7.1.2 Water. Organic-free deionized water is required.

7.1.3 Nitrogen. High-purity nitrogen (less than 0.5 ppm total hydrocarbons) is used to remove test compounds from the purge matrix. The source of nitrogen shall be regulated continuously to 40 psig before the on/off toggle valve.

7.2 Volatile Organic Recovery System.

7.2.1 Water. Organic-free deionized water is required.

7.2.2 Desorption Solvent (when used). Appropriate high-purity (99.99 percent) solvent for desorption shall be used. Analysis shall be performed (utilizing the same analytical technique as that used in the analysis of the waste samples) on each lot to determine purity.

7.3 Analytical System. The gases required for GC operation shall be of the highest obtainable purity (hydrocarbon free). Consult the operating manual for recommended settings.

8.0 Sample Collection, Preservation, Storage, and Transport

8.1 Assemble the glassware and associated fittings (see Figures 305–3 and 305–4, as appropriate) and leak-check the system (approximately 7 psig is the target pressure). After an initial leak check, mark the pressure gauge and use the initial checkpoint to monitor for leaks throughout subsequent analyses. If the pressure in the system drops below the target pressure at any time during analysis, that analysis shall be considered invalid.

8.2 Recovery Efficiency Determination. Determine the individual recovery efficiency (RE) for each of the target compounds in duplicate before the waste samples are analyzed. To determine the RE, generate a water blank (Section 11.1) and use the injection port to introduce a known volume of spike solution (or certified gaseous standard) containing all of the target compounds at the levels expected in the waste sample. Introduce the spike solution immediately after the nitrogen purge has been started (Section

8.3.2). Follow the procedures outlined in Section 8.3.3. Analyze the recovery efficiency samples using the techniques described in Section 11.2. Determine the recovery efficiency (Equation 305–1, Section 12.2) by comparing the amount of compound recovered to the theoretical amount spiked. Determine the RE twice for each compound; the relative standard deviation, (RSD) shall be ≤ 10 percent for each compound. If the RSD for any compound is not ≤ 10 percent, modify the sampling/analytical procedure and complete an RE study in duplicate, or continue determining RE until the RSD meets the acceptable criteria. The average RE shall be 0.70 ≤ RE ≤ 1.30 for each compound. If the average RE does not meet these criteria, an alternative sample collection and/or analysis technique shall be developed and the recovery efficiency determination shall be repeated for that compound until the criteria are met for every target compound. Example modifications of the sampling/analytical system include changing the adsorbent material, changing the desorption solvent, utilizing direct thermal desorption of test compounds from the sorbent tubes, utilizing another analytical technique.

8.3 Sample Collection and Recovery.

8.3.1 The sample collection procedure in Method 25D shall be used to collect (into a preweighed vial) 10 g of waste into PEG, cool, and ship to the laboratory. Remove the sample container from the cooler and wipe the exterior to remove any ice or water. Weigh the container and sample to the nearest 0.01 g and record the weight. Pour the sample from the container into the purge flask. Rinse the sample container three times with approximately 6 mL of PEG (or the volume needed to total 50 mL of PEG in the purge flask), transferring the rinses to the purge flask. Add 50 mL of organic-free deionized water to the purge flask. Cap the purge flask tightly in between each rinse and after adding all the components into the flask.

8.3.2 Allow the oven to equilibrate to 75 ± 2 °C (167 ± 3.6 °F). Begin the sample recovery process by turning the toggle valve on, thus allowing a 6 L/min flow of pure nitrogen through the purge chamber.

8.3.3 Stop the purge after 30 min. Immediately remove the sorbent tube(s) from the apparatus and cap both ends. Remove the knockout trap and transfer the water catch to a 10 mL volumetric flask. Rinse the trap with organic-free deionized water and transfer the rinse to the volumetric flask. Dilute to the 10 mL mark with water. Transfer the water sample to a sample vial and store at 4 °C (39.2 °F) with zero headspace. The analysis of the contents of the water knockout trap is optional for this method. If the target compounds are water soluble, analysis of the water is recommended; meeting the recovery efficiency criteria in these cases would be difficult without adding the amount captured in the knockout trap.

9.0 Quality Control

9.1 Miscellaneous Quality Control Measures.

Section	Quality control measure	Effect
8.1	Sampling equipment leak-check	Ensures accurate measurement of sample volume.
8.2	Recovery efficiency (RE) determination for each measured compound..	Ensures accurate sample collection and analysis.
8.3	Calibration of analytical instrument with at least 3 calibration standards..	Ensures linear measurement of compounds over the instrument span.

10.0 Calibration and Standardization

10.1 The analytical instrument shall be calibrated with a minimum of three levels of standards for each compound whose concentrations bracket the concentration of test compounds from the sorbent tubes. Liquid calibration standards shall be used for calibration in the analysis of the solvent extracts. The liquid calibration standards shall be prepared in the desorption solvent matrix. The calibration standards may be prepared and injected individually or as a mixture. If thermal desorption and focusing (onto another sorbent or cryogen focusing) are used, a certified gaseous mixture or a series of gaseous standards shall be used for calibration of the instrument. The gaseous standards shall be focused and analyzed in the same manner as the samples.

10.2 The analytical system shall be certified free from contaminants before a calibration is performed (see Section 11.1). The calibration standards are used to determine the linearity of the analytical system. Perform an initial calibration and linearity check by analyzing the three calibration standards for each target compound in triplicate starting with the lowest level and continuing to the highest level. If the triplicate analyses do not agree within 5 percent of their average, additional analyses will be needed until the 5 percent criteria is met. Calculate the response factor (Equation 305–3, Section 12.4) from the average area counts of the injections for each concentration level. Average the response factors of the standards for each compound. The linearity of the detector is acceptable if the response

factor of each compound at a particular concentration is within 10 percent of the overall mean response factor for that compound. Analyze daily a mid-level calibration standard in duplicate and calculate a new response factor. Compare the daily response factor average to the average response factor calculated for the mid-level calibration during the initial linearity check; repeat the three-level calibration procedure if the daily average response factor differs from the initial linearity check mid-level response factor by more than 10 percent. Otherwise, proceed with the sample analysis.

11.0 Analytical Procedure

11.1 Water Blank Analysis. A water blank shall be analyzed daily to determine the cleanliness of the purge and recovery system. A water blank is generated by adding 60 mL of organic-free deionized water to 50 mL of PEG in the purge chamber. Treat the blank as described in Sections 8.3.2 and 8.3.3. The purpose of the water blank is to insure that no contaminants exist in the sampling and analytical apparatus which would interfere with the quantitation of the target compounds. If contaminants are present, locate the source of contamination, remove it, and repeat the water blank analysis.

11.2 Sample Analysis. Sample analysis in the context of this method refers to techniques to remove the target compounds from the sorbent tubes, separate them using a chromatography technique, and quantify them with an appropriate detector. Two types of sample extraction techniques typically used for sorbents include solvent desorption or direct thermal desorption of test compounds to a secondary focusing unit (either sorbent or cryogen based). The test compounds are then typically transferred to a GC system for analysis. Other analytical systems may be used (e.g., HPLC) in lieu of GC systems as long as the recovery efficiency criteria of this method are met.

11.2.1 Recover the test compounds from the sorbent tubes that require solvent desorption by transferring the adsorbent material to a sample vial containing the desorption solvent. The desorption solvent shall be the same as the solvent used to prepare calibration standards. The volume of solvent depends on the amount of adsorbed material to be desorbed (1.0 mL per 100 mg of adsorbent material) and also on the amount of test compounds present. Final volume adjustment and or dilution can be made so that the concentration of test compounds in the desorption solvent is bracketed by the concentration of the calibration solutions. Ultrasonicate the desorption solvent for 15 min in an ice bath. Allow the sample to sit for a period of time so that the adsorbent material can settle to the bottom of the vial. Transfer the solvent with a pasteur pipet (minimizing the amount of adsorbent material taken) to another vial and store at 4 °C (39.2 °F).

11.2.2 Analyze the desorption solvent or direct thermal desorption tubes from each sample using the same analytical parameters used for the calibration standard. Calculate the total weight detected for each compound (Equation 305–4, Section 12.5). The slope (area/amount) and y-intercept are calculated from the line bracketed between the two closest calibration points. Correct the concentration of each waste sample with the appropriate recovery efficiency factor and the split flow ratio (if used). The final concentration of each individual test compound is calculated by dividing the corrected measured weight for that compound by the weight of the original sample determined in Section 8.3.1 (Equation 305–5, Section 12.6).

11.2.3 Repeat the analysis for the three samples collected in Section 8.3. Report the corrected concentration of each of the waste samples, average waste concentration, and relative standard deviation (Equation 305–6, Section 12.7).

12.0 Data Analysis and Calculations.

12.1 Nomenclature.

A_S = Mean area counts of test compound in standard.

A_U = Mean area counts of test compound in sample desorption solvent.

b = Y-intercept of the line formed between the two closest calibration standards that bracket the concentration of the sample.

C_T = Amount of test compound (μg) in calibration standard.

C_F = Correction for adjusting final amount of sample detected for losses during individual sample runs.

F_P = Nitrogen flow through the purge chamber (6 L/min).

F_S = Nitrogen split flow directed to the sample recovery system (use 6 L/min if split flow design was not used).

PPM = Final concentration of test compound in waste sample [μg/g (which is equivalent to parts per million by weight (ppmw))].

RE = Recovery efficiency for adjusting final amount of sample detected for losses due to inefficient trapping and desorption techniques.

R.F. = Response factor for test compound, calculated from a calibration standard.

S = Slope of the line (area counts/C_T) formed between two closest calibration points that bracket the concentration of the sample.

W_C = Weight of test compound expected to be recovered in spike solution based on theoretical amount (μg).

W_E = Weight of vial and PEG (g).

W_F = Weight of vial, PEG and waste sample (g).

W_S = Weight of original waste sample (g).

W_T = Corrected weight of test compound measured (μg) in sample.

W_X = Weight of test compound measured during analysis of recovery efficiency spike samples (μg).

12.2 Recovery efficiency for determining trapping/desorption efficiency of individual test compounds in the spike solution, decimal value.

$$RE = \frac{W_X}{W_C} \qquad \text{Eq. 305-1}$$

12.3 Weight of waste sample (g).

$$W_S = W_F - W_E \qquad \text{Eq. 305-2}$$

12.4 Response factor for individual test compounds.

$$RF = \frac{C_T}{A_S} \qquad \text{Eq. 305-3}$$

12.5 Corrected weight of a test compound in the sample, in μg.

$$W_T = \frac{A_u - b}{S} \times \frac{1}{RE} \times \frac{F_p}{F_s} \qquad \text{Eq. 305-4}$$

12.6 Final concentration of a test compound in the sample in ppmw.

$$PPM = \frac{W_T}{W_S} \qquad \text{Eq. 305-5}$$

12.7 Relative standard deviation (RSD) calculation.

$$RSD = \frac{100}{\overline{PPM}} \sqrt{\frac{\sum_{i=1}^{n} \left(PPM_i - \overline{PPM}\right)^2}{n-1}} \qquad \text{Eq. 305-6}$$

13.0 Method Performance. [Reserved]

14.0 Pollution Prevention. [Reserved]

15.0 Waste Management. [Reserved]

16.0 References. [Reserved]

17.0 Tables, Diagrams, Flowcharts, and Validation Data

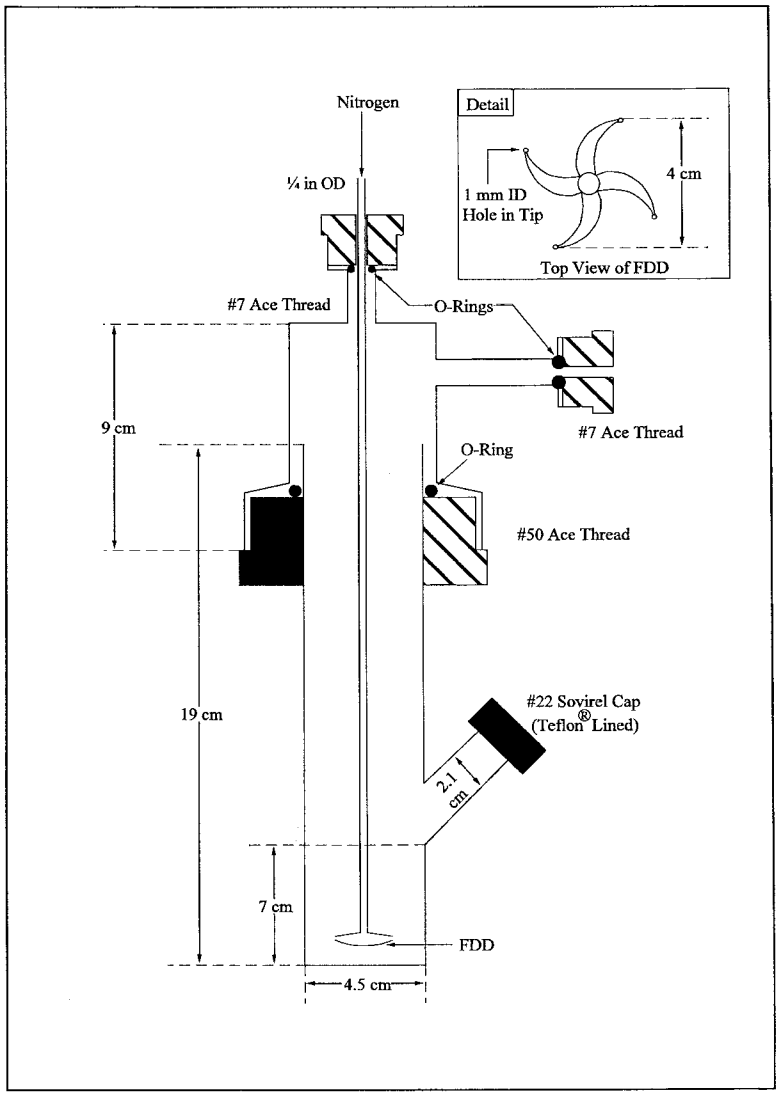

Figure 305-1. Schematic of Purge Chamber.

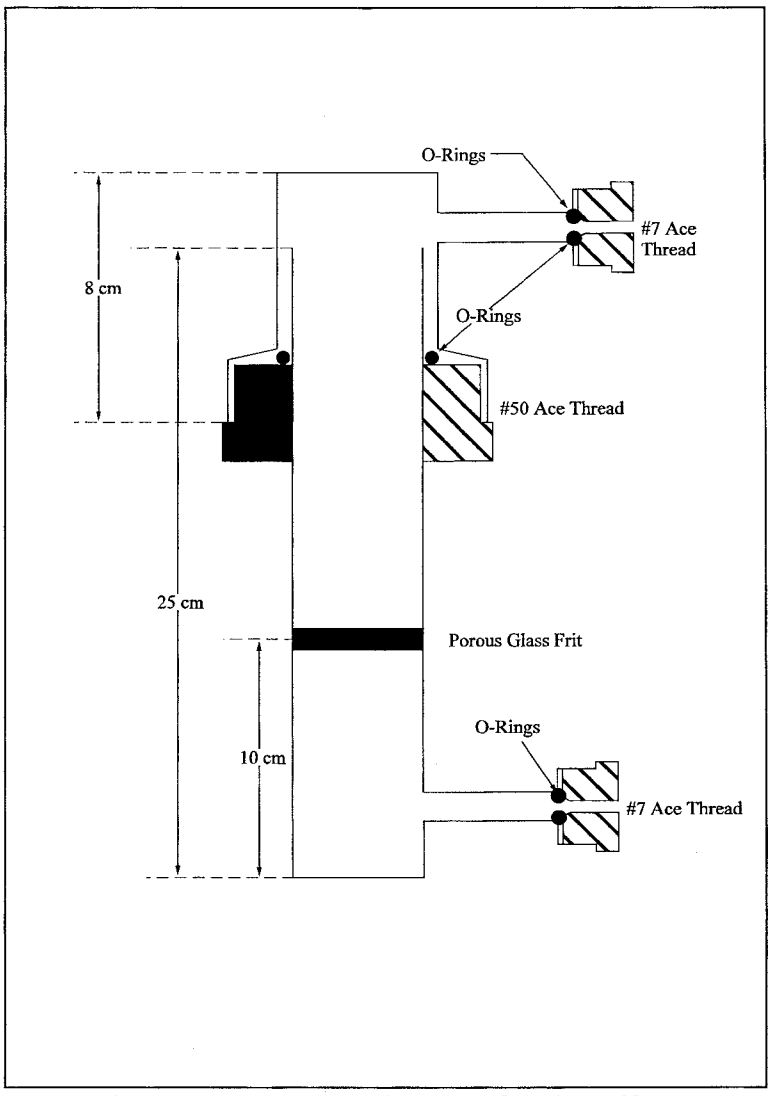

Figure 305-2. Schematic of Coalescing Filter.

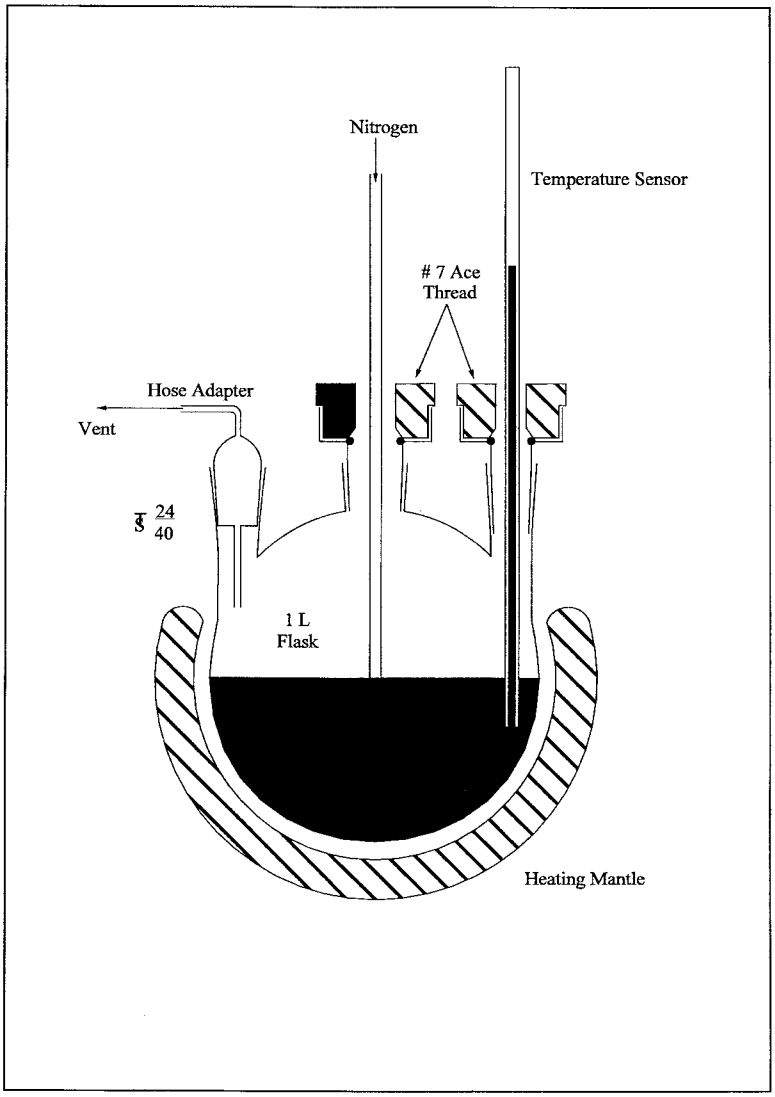

Figure 305-3. Schematic of PEG Cleaning System.

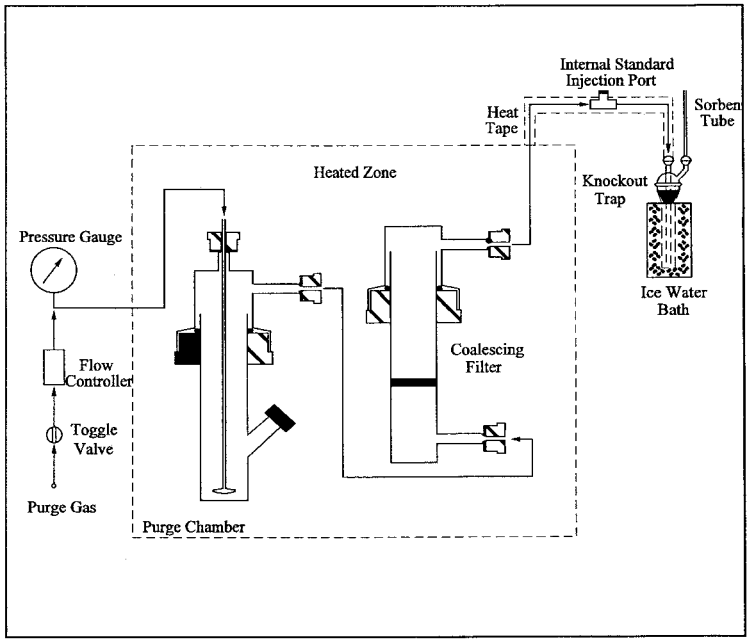

Figure 305-4. Schematic of Purge and Recovery Apparatus.

METHOD 306—DETERMINATION OF CHROMIUM EMISSIONS FROM DECORATIVE AND HARD CHROMIUM ELECTROPLATING AND CHROMIUM ANODIZING OPERATIONS—ISOKINETIC METHOD

Note: This method does not include all of the specifications (*e.g.*, equipment and supplies) and procedures (*e.g.*, sampling and analytical) essential to its performance. Some material is incorporated by reference from other methods in 40 CFR Part 60, Appendix A. Therefore, to obtain reliable results, persons using this method should have a thorough knowledge of at least Method 5.

1.0 Scope and Application

1.1 Analytes.

Analyte	CAS No.	Sensitivity
Chromium	7440–47–3	See Sec. 13.2.

1.2 Applicability. This method applies to the determination of chromium (Cr) in emissions from decorative and hard chrome electroplating facilities, chromium anodizing operations, and continuous chromium plating operations at iron and steel facilities.

1.3 Data Quality Objectives. [Reserved]

2.0 Summary of Method

2.1 Sampling. An emission sample is extracted isokinetically from the source using an unheated Method 5 sampling train (40 CFR Part 60, Appendix A), with a glass nozzle and probe liner, but with the filter omitted. The sample time shall be at least two hours. The Cr emissions are collected in an alkaline solution containing 0.1 N sodium hydroxide (NaOH) or 0.1 N sodium bicarbonate ($NaHCO_3$). The collected samples are recovered using an alkaline solution and are then transported to the laboratory for analysis.

2.2 Analysis.

2.2.1 Total chromium samples with high chromium concentrations (≥35 μg/L) may be analyzed using inductively coupled plasma emission spectrometry (ICP) at 267.72 nm.

NOTE: The ICP analysis is applicable for this method only when the solution analyzed has a Cr concentration greater than or equal

to 35 μg/L or five times the method detection limit as determined according to Appendix B in 40 CFR Part 136.

2.2.2 Alternatively, when lower total chromium concentrations (<35 μg/L) are encountered, a portion of the alkaline sample solution may be digested with nitric acid and analyzed by graphite furnace atomic absorption spectroscopy (GFAAS) at 357.9 nm.

2.2.3 If it is desirable to determine hexavalent chromium (Cr^{+6}) emissions, the samples may be analyzed using an ion chromatograph equipped with a post-column reactor (IC/PCR) and a visible wavelength detector. To increase sensitivity for trace levels of Cr^{+6}, a preconcentration system may be used in conjunction with the IC/PCR.

3.0 Definitions

3.1 *Total Chromium*—measured chromium content that includes both major chromium oxidation states (Cr^{+3}, Cr^{+3}).

3.2 *May*—Implies an optional operation.

3.3 *Digestion*—The analytical operation involving the complete (or nearly complete) dissolution of the sample in order to ensure the complete solubilization of the element (analyte) to be measured.

3.4 *Interferences*—Physical, chemical, or spectral phenomena that may produce a high or low bias in the analytical result.

3.5 *Analytical System*—All components of the analytical process including the sample digestion and measurement apparatus.

3.6 *Sample Recovery*—The quantitative transfer of sample from the collection apparatus to the sample preparation (digestion, etc.) apparatus. This term should not be confused with analytical recovery.

3.7 *Matrix Modifier*—A chemical modification to the sample during GFAAS determinations to ensure that the analyte is not lost during the measurement process (prior to the atomization stage)

3.8 *Calibration Reference Standards*—Quality control standards used to check the accuracy of the instrument calibration curve prior to sample analysis.

3.9 *Continuing Check Standard*—Quality control standards used to verify that unacceptable drift in the measurement system has not occurred.

3.10 *Calibration Blank*—A blank used to verify that there has been no unacceptable shift in the baseline either immediately following calibration or during the course of the analytical measurement.

3.11 *Interference Check*—An analytical/measurement operation that ascertains whether a measurable interference in the sample exists.

3.12 *Interelement Correction Factors*—Factors used to correct for interfering elements that produce a false signal (high bias).

3.13 *Duplicate Sample Analysis*—Either the repeat measurement of a single solution or the measurement of duplicate preparations of the same sample. It is important to be aware of which approach is required for a particular type of measurement. For example, no digestion is required for the ICP determination and the duplicate instrument measurement is therefore adequate whereas duplicate digestion/instrument measurements are required for GFAAS.

3.14 *Matrix Spiking*—Analytical spikes that have been added to the actual sample matrix either before (Section 9.2.5.2) or after (Section 9.1.6). Spikes added to the sample *prior* to a preparation technique (*e.g.*, digestion) allow for the assessment of an overall method accuracy while those added *after* only provide for the *measurement* accuracy determination.

4.0 Interferences

4.1 ICP Interferences.

4.1.1 ICP Spectral Interferences. Spectral interferences are caused by: overlap of a spectral line from another element; unresolved overlap of molecular band spectra; background contribution from continuous or recombination phenomena; and, stray light from the line emission of high-concentrated elements. Spectral overlap may be compensated for by correcting the raw data with a computer and measuring the interfering element. At the 267.72 nm Cr analytical wavelength, iron, manganese, and uranium are potential interfering elements. Background and stray light interferences can usually be compensated for by a background correction adjacent to the analytical line. Unresolved overlap requires the selection of an alternative chromium wavelength. Consult the instrument manufacturer's operation manual for interference correction procedures.

4.1.2 ICP Physical Interferences. High levels of dissolved solids in the samples may cause significant inaccuracies due to salt buildup at the nebulizer and torch tips. This problem can be controlled by diluting the sample or by extending the rinse times between sample analyses. Standards shall be prepared in the same solution matrix as the samples (*i.e.*, 0.1 N NaOH or 0.1 N $NaHCO_3$).

4.1.3 ICP Chemical Interferences. These include molecular compound formation, ionization effects and solute vaporization effects, and are usually not significant in the ICP procedure, especially if the standards and samples are matrix matched.

4.2 GFAAS Interferences.

4.2.1 GFAAS Chemical Interferences. Low concentrations of calcium and/or phosphate may cause interferences; at concentrations above 200 μg/L, calcium's effect is constant and eliminates the effect of phosphate. Calcium nitrate is therefore added to the concentrated analyte to ensure a known constant effect. Other matrix modifiers recommended by the instrument manufacturer may also be considered.

4.2.2 GFAAS Cyanide Band Interferences. Nitrogen should not be used as the purge gas due to cyanide band interference.

4.2.3 GFAAS Spectral Interferences. Background correction may be required because of possible significant levels of nonspecific absorption and scattering at the 357.9 nm analytical wavelength.

4.2.4 GFAAS Background Interferences. Zeeman or Smith-Hieftje background correction is recommended for interferences resulting from high levels of dissolved solids in the alkaline impinger solutions.

4.3 IC/PCR Interferences.

4.3.1 IC/PCR Chemical Interferences. Components in the sample matrix may cause Cr^{+6} to convert to trivalent chromium (Cr^{+3}) or cause Cr^{+3} to convert to Cr^{+6}. The chromatographic separation of Cr^{+6} using ion chromatography reduces the potential for other metals to interfere with the post column reaction. For the IC/PCR analysis, only compounds that coelute with Cr^{+6} and affect the diphenylcarbazide reaction will cause interference.

4.3.2 IC/PCR Background Interferences. Periodic analyses of reagent water blanks are used to demonstrate that the analytical system is essentially free of contamination. Sample cross-contamination can occur when high-level and low-level samples or standards are analyzed alternately and can be eliminated by thorough purging of the sample loop. Purging of the sample can easily be achieved by increasing the injection volume to ten times the size of the sample loop.

5.0 Safety

5.1 Disclaimer. This method may involve hazardous materials, operations, and equipment. This test method may not address all of the safety problems associated with its use. It is the responsibility of the user to establish appropriate safety and health practices and to determine the applicability of regulatory limitations prior to performing this test method.

5.2 Hexavalent chromium compounds have been listed as carcinogens although chromium (III) compounds show little or no toxicity. Chromium can be a skin and respiratory irritant.

6.0 Equipment and Supplies

6.1 Sampling Train.

6.1.1 A schematic of the sampling train used in this method is shown in Figure 306–1. The train is the same as shown in Method 5, Section 6.0 (40 CFR Part 60, Appendix A) except that the probe liner is unheated, the particulate filter is omitted, and quartz or borosilicate glass must be used for the probe nozzle and liner in place of stainless steel.

6.1.2 Probe fittings of plastic such as Teflon, polypropylene, etc. are recommended over metal fittings to prevent contamination. If desired, a single combined probe nozzle and liner may be used, but such a single glass assembly is not a requirement of this methodology.

6.1.3 Use 0.1 N NaOH or 0.1 N $NaHCO_3$ in the impingers in place of water.

6.1.4 Operating and maintenance procedures for the sampling train are described in APTD–0576 of Method 5. Users should read the APTD–0576 document and adopt the outlined procedures.

6.1.5 Similar collection systems which have been approved by the Administrator may be used.

6.2 Sample Recovery. Same as Method 5, [40 CFR Part 60, Appendix A], with the following exceptions:

6.2.1 Probe-Liner and Probe-Nozzle Brushes. Brushes are not necessary for sample recovery. If a probe brush is used, it must be non-metallic.

6.2.2 Sample Recovery Solution. Use 0.1 N NaOH or 0.1 N $NaHCO_3$, whichever is used as the impinger absorbing solution, in place of acetone to recover the sample.

6.2.3 Sample Storage Containers. Polyethylene, with leak-free screw cap, 250 mL, 500 mL or 1,000 mL.

6.3 Analysis.

6.3.1 General. For analysis, the following equipment is needed.

6.3.1.1 Phillips Beakers. (Phillips beakers are preferred, but regular beakers may also be used.)

6.3.1.2 Hot Plate.

6.3.1.3 Volumetric Flasks. Class A, various sizes as appropriate.

6.3.1.4 Assorted Pipettes.

6.3.2 Analysis by ICP.

6.3.2.1 ICP Spectrometer. Computer-controlled emission spectrometer with background correction and radio frequency generator.

6.3.2.2 Argon Gas Supply. Welding grade or better.

6.3.3 Analysis by GFAAS.

6.3.3.1 Chromium Hollow Cathode Lamp or Electrodeless Discharge Lamp.

6.3.3.2 Graphite Furnace Atomic Absorption Spectrophotometer.

6.3.3.3 Furnace Autosampler.

6.3.4 Analysis by IC/PCR.

6.3.4.1 IC/PCR System. High performance liquid chromatograph pump, sample injection valve, post-column reagent delivery and mixing system, and a visible detector, capable of operating at 520 nm-540 nm, all with a non-metallic (or inert) flow path. An electronic peak area mode is recommended, but other recording devices and integration techniques are acceptable provided the repeatability criteria and the linearity criteria for the calibration curve described in Section 10.4 can be satisfied. A sample loading system is required if preconcentration is employed.

6.3.4.2 Analytical Column. A high performance ion chromatograph (HPIC) non-metallic column with anion separation characteristics and a high loading capacity designed for separation of metal chelating compounds to prevent metal interference. Resolution described in Section 11.6 must be obtained. A non-metallic guard column with the same ion-exchange material is recommended.

6.3.4.3 Preconcentration Column (for older instruments). An HPIC non-metallic column with acceptable anion retention characteristics and sample loading rates must be used as described in Section 11.6.

6.3.4.4 Filtration Apparatus for IC/PCR.

6.3.4.4.1 Teflon, or equivalent, filter holder to accommodate 0.45-µm acetate, or equivalent, filter, if needed to remove insoluble particulate matter.

6.3.4.4.2 0.45-µm Filter Cartridge. For the removal of insoluble material. To be used just prior to sample injection/analysis.

7.0 Reagents and Standards

NOTE: Unless otherwise indicated, all reagents should conform to the specifications established by the Committee on Analytical Reagents of the American Chemical Society (ACS reagent grade). Where such specifications are not available, use the best available grade. Reagents should be checked by the appropriate analysis prior to field use to assure that contamination is below the analytical detection limit for the ICP or GFAAS total chromium analysis; and that contamination is below the analytical detection limit for Cr^{+6} using IC/PCR for direct injection or, if selected, preconcentration.

7.1 Sampling.

7.1.1 Water. Reagent water that conforms to ASTM Specification D1193–77 or 91 Type II (incorporated by reference see §63.14). All references to water in the method refer to reagent water unless otherwise specified. It is recommended that water blanks be checked prior to preparing the sampling reagents to ensure that the Cr content is less than three (3) times the anticipated detection limit of the analytical method.

7.1.2 Sodium Hydroxide (NaOH) Absorbing Solution, 0.1 N. Dissolve 4.0 g of sodium hydroxide in 1 liter of water to obtain a pH of approximately 8.5.

7.1.3 Sodium Bicarbonate ($NaHCO_3$) Absorbing Solution, 0.1 N. Dissolve approximately 8.5 g of sodium bicarbonate in 1 liter of water to obtain a pH of approximately 8.3.

7.1.4 Chromium Contamination.

7.1.4.1 The absorbing solution shall not exceed the QC criteria noted in Section 7.1.1 (≤3 times the instrument detection limit).

7.1.4.2 When the Cr^{+6} content in the field samples exceeds the blank concentration by at least a factor of ten (10), Cr^{+6} blank concentrations ≥ 10 times the detection limit will be allowed.

NOTE: At sources with high concentrations of acids and/or SO_2, the concentration of NaOH or $NaHCO_3$ should be ≥ 0.5 N to insure that the pH of the solution remains at or above 8.5 for NaOH and 8.0 for $NaHCO_3$ during and after sampling.

7.1.5 Silica Gel. Same as in Method 5.

7.2 Sample Recovery.

7.2.1 0.1 N NaOH or 0.1 N $NaHCO_3$. Use the same solution for the sample recovery that is used for the impinger absorbing solution.

7.2.2 pH Indicator Strip, for IC/PCR. pH indicator capable of determining the pH of solutions between the pH range of 7 and 12, at 0.5 pH increments.

7.3 Sample Preparation and Analysis.

7.3.1 Nitric Acid (HNO_3), Concentrated, for GFAAS. Trace metals grade or better HNO_3 must be used for reagent preparation. The ACS reagent grade HNO_3 is acceptable for cleaning glassware.

7.3.2 HNO_3, 1.0% (v/v), for GFAAS. Prepare, by slowly stirring, 10 mL of concentrated HNO_3) into 800 mL of reagent water. Dilute to 1,000 mL with reagent water. The solution shall contain less than 0.001 mg Cr/L.

7.3.3 Calcium Nitrate $Ca(NO_3)_2$ Solution (10 µg Ca/mL) for GFAAS analysis. Prepare the solution by weighing 40.9 mg of $Ca(NO_3)_2$ into a 1 liter volumetric flask. Dilute with reagent water to 1 liter.

7.3.4 Matrix Modifier, for GFAAS. See instrument manufacturer's manual for suggested matrix modifier.

7.3.5 Chromatographic Eluent, for IC/PCR. The eluent used in the analytical system is ammonium sulfate based.

7.3.5.1 Prepare by adding 6.5 mL of 29 percent ammonium hydroxide (NH_4OH) and 33 g of ammonium sulfate ($(NH_4)_2SO_4$) to 500 mL of reagent water. Dilute to 1 liter with reagent water and mix well.

7.3.5.2 Other combinations of eluents and/or columns may be employed provided peak resolution, repeatability, linearity, and analytical sensitivity as described in Sections 9.3 and 11.6 are acceptable.

7.3.6 Post-Column Reagent, for IC/PCR. An effective post-column reagent for use with the chromatographic eluent described in Section 7.3.5 is a diphenylcarbazide (DPC)-based system. Dissolve 0.5 g of 1,5-diphenylcarbazide in 100 mL of ACS grade methanol. Add 500 mL of reagent water containing 50 mL of 96 percent spectrophotometric grade sulfuric acid. Dilute to 1 liter with reagent water.

7.3.7 Chromium Standard Stock Solution (1000 mg/L). Procure a certified aqueous standard or dissolve 2.829 g of potassium dichromate ($K_2Cr_2O_7$), in reagent water and dilute to 1 liter.

7.3.8 Calibration Standards for ICP or IC/PCR. Prepare calibration standards for ICP or IC/PCR by diluting the Cr standard stock solution (Section 7.3.7) with 0.1 N NaOH or

0.1 N $NaHCO_3$, whichever is used as the impinger absorbing solution, to achieve a matrix similar to the actual field samples. Suggested levels are 0, 50, 100, and 200 µg Cr/L for ICP, and 0, 1, 5, and 10 µg Cr^{+6}/L for IC/PCR.

7.3.9 Calibration Standards for GFAAS. Chromium solutions for GFAAS calibration shall contain 1.0 percent (v/v) HNO_3. The zero standard shall be 1.0 percent (v/v) HNO_3. Calibration standards should be prepared daily by diluting the Cr standard stock solution (Section 7.3.7) with 1.0 percent HNO_3. Use at least four standards to make the calibration curve. Suggested levels are 0, 10, 50, and 100 µg Cr/L.

7.4 Glassware Cleaning Reagents.

7.4.1 HNO_3, Concentrated. ACS reagent grade or equivalent.

7.4.2 Water. Reagent water that conforms to ASTM Specification D1193–77 or 91 Type II.

7.4.3 HNO_3, 10 percent (v/v). Add by stirring 500 mL of concentrated HNO_3 into a flask containing approximately 4,000 mL of reagent water. Dilute to 5,000 mL with reagent water. Mix well. The reagent shall contain less than 2 µg Cr/L.

7.5 Quality Assurance Audit Samples.

7.5.1 When making compliance determinations, and upon availability, audit samples shall be obtained from the appropriate EPA regional Office or from the responsible enforcement authority and analyzed in conjunction with the field samples.

7.5.2 If EPA or National Institute of Standards and Technology (NIST) reference audit sample are not available, a mid-range standard, prepared from an independent commercial source, may be used.

NOTE: To order audit samples, contact the responsible enforcement authority at least 30 days prior to the test date to allow sufficient time for the audit sample to be delivered.

8.0 Sample Collection, Preservation, Holding Times, Storage, and Transport

NOTE: Prior to sample collection, consideration should be given to the type of analysis (Cr^{+6} or total Cr) that will be performed. Which analysis option(s) will be performed will determine which sample recovery and storage procedures will be required to process the sample (See Figures 306–3 and 306–4).

8.1 Sample Collection. Same as Method 5 (40 CFR part 60, Appendix A), with the following exceptions.

8.1.1 Omit the particulate filter and filter holder from the sampling train. Use a glass nozzle and probe liner instead of stainless steel. Do not heat the probe. Place 100 mL of 0.1 N NaOH or 0.1 N $NaHCO_3$ in each of the first two impingers, and record the data for each run on a data sheet such as shown in Figure 306–2.

8.1.2 Clean all glassware prior to sampling in hot soapy water designed for laboratory cleaning of glassware. Next, rinse the glassware three times with tap water, followed by three additional rinses with reagent water. Then soak the glassware in 10% (v/v) HNO_3 solution for a minimum of 4 hours, rinse three times with reagent water, and allow to air dry. Cover all glassware openings where contamination can occur with Parafilm, or equivalent, until the sampling train is assembled for sampling.

8.1.3 Train Operation. Follow the basic procedures outlined in Method 5 in conjunction with the following instructions. Train sampling rate shall not exceed 0.030 m^3/min (1.0 cfm) during a run.

8.2 Sample Recovery. Follow the basic procedures of Method 5, with the exceptions noted.

8.2.1 A particulate filter is not recovered from this train.

8.2.2 Tester shall select either the total Cr or Cr^{+6} sample recovery option.

8.2.3 Samples to be analyzed for both total Cr and Cr^{+6}, shall be recovered using the Cr^{+6} sample option (Section 8.2.6).

8.2.4 A field reagent blank shall be collected for either of the Cr or the Cr^{+6} analysis. If both analyses (Cr and Cr^{+6}) are to be conducted on the samples, collect separate reagent blanks for each analysis.

NOTE: Since particulate matter is not usually present at chromium electroplating and/or chromium anodizing operations, it is not necessary to filter the Cr^{+6} samples unless there is observed sediment in the collected solutions. If it is necessary to filter the Cr^{+6} solutions, please refer to Method 0061, Determination of Hexavalent Chromium Emissions From Stationary Sources, Section 7.4, Sample Preparation in SW–846 (see Reference 1).

8.2.5 Total Cr Sample Option.

8.2.5.1 Container No. 1. Measure the volume of the liquid in the first, second, and third impingers and quantitatively transfer into a labeled sample container.

8.2.5.2 Use approximately 200 to 300 mL of the 0.1 N NaOH or 0.1 N $NaHCO_3$ absorbing solution to rinse the probe nozzle, probe liner, three impingers, and connecting glassware; add this rinse to Container No. 1.

8.2.6 Cr^{+6} Sample Option.

8.2.6.1 Container No. 1. Measure and record the pH of the absorbing solution contained in the *first* impinger at the end of the sampling run using a pH indicator strip. The pH of the solution must be ≥8.5 for NaOH and ≥8.0 for $NaHCO_3$. If it is not, discard the collected sample, increase the normality of the NaOH or $NaHCO_3$ impinger absorbing solution to 0.5 N or to a solution normality approved by the Administrator and collect another air emission sample.

8.2.6.2 After determining the pH of the first impinger solution, combine and measure the volume of the liquid in the first, second, and third impingers and quantitatively transfer into the labeled sample container.

Use approximately 200 to 300 mL of the 0.1 N NaOH or 0.1 N $NaHCO_3$ absorbing solution to rinse the probe nozzle, probe liner, three impingers, and connecting glassware; add this rinse to Container No. 1.

8.2.7 Field Reagent Blank.

8.2.7.1 Container No. 2.

8.2.7.2 Place approximately 500 mL of the 0.1 N NaOH or 0.1 N $NaHCO_3$ absorbing solution into a labeled sample container.

8.3 Sample Preservation, Storage, and Transport.

8.3.1 Total Cr Sample Option. Samples to be analyzed for total Cr need not be refrigerated.

8.3.2 Cr^{+6} Sample Option. Samples to be analyzed for Cr^{+6} must be shipped and stored at 4 °C. Allow Cr^{+6} samples to return to ambient temperature prior to analysis.

8.4 Sample Holding Times.

8.4.1 Total Cr Sample Option. Samples to be analyzed for total Cr shall be analyzed within 60 days of collection.

8.4.2 Cr^{+6} Sample Option. Samples to be analyzed for Cr^{+6} shall be analyzed within 14 days of collection.

9.0 Quality Control

9.1 ICP Quality Control.

9.1.1 ICP Calibration Reference Standards. Prepare a calibration reference standard using the same alkaline matrix as the calibration standards; it should be at least 10 times the instrumental detection limit.

9.1.1.1 This reference standard must be prepared from a different Cr stock solution source than that used for preparation of the calibration curve standards.

9.1.1.2 Prior to sample analysis, analyze at least one reference standard.

9.1.1.3 The calibration reference standard must be measured within 10 percent of it's true value for the curve to be considered valid.

9.1.1.4 The curve must be validated before sample analyses are performed.

9.1.2 ICP Continuing Check Standard.

9.1.2.1 Perform analysis of the check standard with the field samples as described in Section 11.2 (at least after every 10 samples, and at the end of the analytical run).

9.1.2.2 The check standard can either be the mid-range calibration standard or the reference standard. The results of the check standard shall agree within 10 percent of the expected value; if not, terminate the analyses, correct the problem, recalibrate the instrument, and rerun all samples analyzed subsequent to the last acceptable check standard analysis.

9.1.3 ICP Calibration Blank.

9.1.3.1 Perform analysis of the calibration blank with the field samples as described in Section 11.2 (at least after every 10 samples, and at the end of the analytical run).

9.1.3.2 The results of the calibration blank shall agree within three standard deviations of the mean blank value. If not, analyze the calibration blank two more times and average the results. If the average is not within three standard deviations of the background mean, terminate the analyses, correct the problem, recalibrate, and reanalyze all samples analyzed subsequent to the last acceptable calibration blank analysis.

9.1.4 ICP Interference Check. Prepare an interference check solution that contains known concentrations of interfering elements that will provide an adequate test of the correction factors in the event of potential spectral interferences.

9.1.4.1 Two potential interferences, iron and manganese, may be prepared as 1000 μg/mL and 200 μg/mL solutions, respectively. The solutions should be prepared in dilute HNO_3 (1–5 percent). Particular care must be used to ensure that the solutions and/or salts used to prepare the solutions are of ICP grade purity (*i.e.*, that no measurable Cr contamination exists in the salts/solutions). Commercially prepared interfering element check standards are available.

9.1.4.2 Verify the interelement correction factors every three months by analyzing the interference check solution. The correction factors are calculated according to the instrument manufacturer's directions. If the interelement correction factors are used properly, no false Cr should be detected.

9.1.4.3 Negative results with an absolute value greater than three (3) times the detection limit are usually the results of the background correction position being set incorrectly. Scan the spectral region to ensure that the correction position has not been placed on an interfering peak.

9.1.5 ICP Duplicate Sample Analysis. Perform one duplicate sample analysis for each compliance sample batch (3 runs).

9.1.5.1 As there is no sample preparation required for the ICP analysis, a duplicate analysis is defined as a repeat analysis of one of the field samples. The selected sample shall be analyzed using the same procedures that were used to analyze the original sample.

9.1.5.2 Duplicate sample analyses shall agree within 10 percent of the original measurement value.

9.1.5.3 Report the original analysis value for the sample and report the duplicate analysis value as the QC check value. If agreement is not achieved, perform the duplicate analysis again. If agreement is not achieved the second time, perform corrective action to identify and correct the problem before analyzing the sample for a third time.

9.1.6 ICP Matrix Spiking. Spiked samples shall be prepared and analyzed daily to ensure that there are no matrix effects, that samples and standards have been matrix-matched, and that the laboratory equipment is operating properly.

9.1.6.1 Spiked sample recovery analyses should indicate a recovery for the Cr spike of between 75 and 125 percent.

9.1.6.2 Cr levels in the spiked sample should provide final solution concentrations that are within the linear portion of the calibration curve, as well as, at a concentration level at least: equal to that of the original sample; and, ten (10) times the detection limit.

9.1.6.3 If the spiked sample concentration meets the stated criteria but exceeds the linear calibration range, the spiked sample must be diluted with the field absorbing solution.

9.1.6.4 If the recoveries for the Cr spiked samples do not meet the specified criteria, perform corrective action to identify and correct the problem prior to reanalyzing the samples.

9.1.7 ICP Field Reagent Blank.

9.1.7.1 Analyze a minimum of one matrix-matched field reagent blank (Section 8.2.4) per sample batch to determine if contamination or memory effects are occurring.

9.1.7.2 If contamination or memory effects are observed, perform corrective action to identify and correct the problem before reanalyzing the samples.

9.1.8 Audit Sample Analysis.

9.1.8.1 When the method is used to analyze samples to demonstrate compliance with a source emission regulation, an audit sample must be analyzed, subject to availability.

9.1.8.2 Concurrently analyze the audit sample and the compliance samples in the same manner to evaluate the technique of the analyst and the standards preparation.

9.1.8.3 The same analyst, analytical reagents, and analytical system shall be used for the compliance samples and the audit sample. If this condition is met, duplicate auditing of subsequent compliance analyses for the same enforcement agency within a 30-day period is waived. An audit sample set may not be used to validate different sets of compliance samples under the jurisdiction of separate enforcement agencies, unless prior arrangements have been made with both enforcement agencies.

9.1.9 Audit Sample Results.

9.1.9.1 Calculate the audit sample concentrations and submit results using the instructions provided with the audit samples.

9.1.9.2 Report the results of the audit samples and the compliance determination samples along with their identification numbers, and the analyst's name to the responsible enforcement authority. Include this information with reports of any subsequent compliance analyses for the same enforcement authority during the 30-day period.

9.1.9.3 The concentrations of the audit samples obtained by the analyst shall agree within the values specified by the compliance auditor. If the specified range is not met, reanalyze the compliance and audit samples, and include initial and reanalysis values in the test report.

9.1.9.4 Failure to meet the specified range may require retests unless the audit problems are resolved. However, if the audit results do not affect the compliance or noncompliance status of the affected facility, the Administrator may waive the reanalysis requirement, further audits, or retests and accept the results of the compliance test. While steps are being taken to resolve audit analysis problems, the Administrator may also choose to use the data to determine the compliance or noncompliance status of the affected facility.

9.2 GFAAS Quality Control.

9.2.1 GFAAS Calibration Reference Standards. The calibration curve must be verified by using at least one calibration reference standard (made from a reference material or other independent standard material) at or near the mid-range of the calibration curve.

9.2.1.1 The calibration curve must be validated before sample analyses are performed.

9.2.1.2 The calibration reference standard must be measured within 10 percent of its true value for the curve to be considered valid.

9.2.2 GFAAS Continuing Check Standard.

9.2.2.1 Perform analysis of the check standard with the field samples as described in Section 11.4 (at least after every 10 samples, and at the end of the analytical run).

9.2.2.2 These standards are analyzed, in part, to monitor the life and performance of the graphite tube. Lack of reproducibility or a significant change in the signal for the check standard may indicate that the graphite tube should be replaced.

9.2.2.3 The check standard may be either the mid-range calibration standard or the reference standard.

9.2.2.4 The results of the check standard shall agree within 10 percent of the expected value.

9.2.2.5 If not, terminate the analyses, correct the problem, recalibrate the instrument, and reanalyze all samples analyzed subsequent to the last acceptable check standard analysis.

9.2.3 GFAAS Calibration Blank.

9.2.3.1 Perform analysis of the calibration blank with the field samples as described in Section 11.4 (at least after every 10 samples, and at the end of the analytical run).

9.2.3.2 The calibration blank is analyzed to monitor the life and performance of the graphite tube as well as the existence of any memory effects. Lack of reproducibility or a significant change in the signal, may indicate that the graphite tube should be replaced.

9.2.3.3 The results of the calibration blank shall agree within three standard deviations of the mean blank value.

9.2.3.4 If not, analyze the calibration blank two more times and average the results. If the average is not within three standard deviations of the background mean, terminate the analyses, correct the problem, recalibrate, and reanalyze all samples analyzed subsequent to the last acceptable calibration blank analysis.

9.2.4 GFAAS Duplicate Sample Analysis. Perform one duplicate sample analysis for each compliance sample batch (3 runs).

9.2.4.1 A digested aliquot of the selected sample is processed and analyzed using the identical procedures that were used for the whole sample preparation and analytical efforts.

9.2.4.2 Duplicate sample analyses results incorporating duplicate digestions shall agree within 20 percent for sample results exceeding ten (10) times the detection limit.

9.2.4.3 Report the original analysis value for the sample and report the duplicate analysis value as the QC check value.

9.2.4.4 If agreement is not achieved, perform the duplicate analysis again. If agreement is not achieved the second time, perform corrective action to identify and correct the problem before analyzing the sample for a third time.

9.2.5 GFAAS Matrix Spiking.

9.2.5.1 Spiked samples shall be prepared and analyzed daily to ensure that (1) correct procedures are being followed, (2) there are no matrix effects and (3) all equipment is operating properly.

9.2.5.2 Cr spikes are added prior to any sample preparation.

9.2.5.3 Cr levels in the spiked sample should provide final solution concentrations that are within the linear portion of the calibration curve, as well as, at a concentration level at least: equal to that of the original sample; and, ten (10) times the detection limit.

9.2.5.4 Spiked sample recovery analyses should indicate a recovery for the Cr spike of between 75 and 125 percent.

9.2.5.5 If the recoveries for the Cr spiked samples do not meet the specified criteria, perform corrective action to identify and correct the problem prior to reanalyzing the samples.

9.2.6 GFAAS Method of Standard Additions.

9.2.6.1 Method of Standard Additions. Perform procedures in Section 5.4 of Method 12 (40 CFR Part 60, Appendix A)

9.2.6.2 Whenever sample matrix problems are suspected and standard/sample matrix matching is not possible or whenever a new sample matrix is being analyzed, perform referenced procedures to determine if the method of standard additions is necessary.

9.2.7 GFAAS Field Reagent Blank.

9.2.7.1 Analyze a minimum of one matrix-matched field reagent blank (Section 8.2.4) per sample batch to determine if contamination or memory effects are occurring.

9.2.7.2 If contamination or memory effects are observed, perform corrective action to identify and correct the problem before reanalyzing the samples.

9.2.8 Audit Sample Analysis.

9.2.8.1 When the method is used to analyze samples to demonstrate compliance with a source emission regulation, an audit sample must be analyzed, subject to availability.

9.2.8.2 Concurrently analyze the audit sample and the compliance samples in the same manner to evaluate the technique of the analyst and the standards preparation.

9.2.8.3 The same analyst, analytical reagents, and analytical system shall be used for the compliance samples and the audit sample. If this condition is met, duplicate auditing of subsequent compliance analyses for the same enforcement agency within a 30-day period is waived. An audit sample set may not be used to validate different sets of compliance samples under the jurisdiction of separate enforcement agencies, unless prior arrangements have been made with both enforcement agencies.

9.2.9 Audit Sample Results.

9.2.9.1 Calculate the audit sample concentrations and submit results using the instructions provided with the audit samples.

9.2.9.2 Report the results of the audit samples and the compliance determination samples along with their identification numbers, and the analyst's name to the responsible enforcement authority. Include this information with reports of any subsequent compliance analyses for the same enforcement authority during the 30-day period.

9.2.9.3 The concentrations of the audit samples obtained by the analyst shall agree within the values specified by the compliance auditor. If the specified range is not met, reanalyze the compliance and audit samples, and include initial and reanalysis values in the test report.

9.2.9.4 Failure to meet the specified range may require retests unless the audit problems are resolved. However, if the audit results do not affect the compliance or noncompliance status of the affected facility, the Administrator may waive the reanalysis requirement, further audits, or retests and accept the results of the compliance test. While steps are being taken to resolve audit analysis problems, the Administrator may also choose to use the data to determine the compliance or noncompliance status of the affected facility.

9.3 IC/PCR Quality Control.

9.3.1 IC/PCR Calibration Reference Standards.

9.3.1.1 Prepare a calibration reference standard at a concentration that is at or near the mid-point of the calibration curve using the same alkaline matrix as the calibration standards. This reference standard

should be prepared from a different Cr stock solution than that used to prepare the calibration curve standards. The reference standard is used to verify the accuracy of the calibration curve.

9.3.1.2 The curve must be validated before sample analyses are performed. Prior to sample analysis, analyze at least one reference standard with an expected value within the calibration range.

9.3.1.3 The results of this reference standard analysis must be within 10 percent of the true value of the reference standard for the calibration curve to be considered valid.

9.3.2 IC/PCR Continuing Check Standard and Calibration Blank.

9.3.2.1 Perform analysis of the check standard and the calibration blank with the field samples as described in Section 11.6 (at least after every 10 samples, and at the end of the analytical run).

9.3.2.2 The result from the check standard must be within 10 percent of the expected value.

9.3.2.3 If the 10 percent criteria is exceeded, excessive drift and/or instrument degradation may have occurred, and must be corrected before further analyses can be performed.

9.3.2.4 The results of the calibration blank analyses must agree within three standard deviations of the mean blank value.

9.3.2.5 If not, analyze the calibration blank two more times and average the results.

9.3.2.6 If the average is not within three standard deviations of the background mean, terminate the analyses, correct the problem, recalibrate, and reanalyze all samples analyzed subsequent to the last acceptable calibration blank analysis.

9.3.3 IC/PCR Duplicate Sample Analysis.

9.3.3.1 Perform one duplicate sample analysis for each compliance sample batch (3 runs).

9.3.3.2 An aliquot of the selected sample is prepared and analyzed using procedures identical to those used for the emission samples (for example, filtration and/or, if necessary, preconcentration).

9.3.3.3 Duplicate sample injection results shall agree within 10 percent for sample results exceeding ten (10) times the detection limit.

9.3.3.4 Report the original analysis value for the sample and report the duplicate analysis value as the QC check value.

9.3.3.5 If agreement is not achieved, perform the duplicate analysis again.

9.3.3.6 If agreement is not achieved the second time, perform corrective action to identify and correct the problem prior to analyzing the sample for a third time.

9.3.4 ICP/PCR Matrix Spiking. Spiked samples shall be prepared and analyzed with each sample set to ensure that there are no matrix effects, that samples and standards have been matrix-matched, and that the equipment is operating properly.

9.3.4.1 Spiked sample recovery analysis should indicate a recovery of the Cr^{+6} spike between 75 and 125 percent.

9.3.4.2 The spiked sample concentration should be within the linear portion of the calibration curve and should be equal to or greater than the concentration of the original sample. In addition, the spiked sample concentration should be at least ten (10) times the detection limit.

9.3.4.3 If the recoveries for the Cr^{+6} spiked samples do not meet the specified criteria, perform corrective action to identify and correct the problem prior to reanalyzing the samples.

9.3.5 IC/PCR Field Reagent Blank.

9.3.5.1 Analyze a minimum of one matrix-matched field reagent blank (Section 8.2.4) per sample batch to determine if contamination or memory effects are occurring.

9.3.5.2 If contamination or memory effects are observed, perform corrective action to identify and correct the problem before reanalyzing the samples.

9.3.6 Audit Sample Analysis.

9.3.6.1 When the method is used to analyze samples to demonstrate compliance with source emission regulation, an audit sample must be analyzed, subject to availability.

9.3.6.2 Concurrently analyze the audit sample and the compliance samples in the same manner to evaluate the technique of the analyst and the standards preparation.

9.3.6.3 The same analyst, analytical reagents, and analytical system shall be used for the compliance samples and the audit sample. If this condition is met, duplicate auditing of subsequent compliance analyses for the same enforcement agency within a 30-day period is waived. An audit sample set may not be used to validate different sets of compliance samples under the jurisdiction of separate enforcement agencies, unless prior arrangements have been made with both enforcement agencies.

9.3.7 Audit Sample Results.

9.3.7.1 Calculate the audit sample concentrations and submit results using the instructions provided with the audit samples.

9.3.7.2 Report the results of the audit samples and the compliance determination samples along with their identification numbers, and the analyst's name to the responsible enforcement authority. Include this information with reports of any subsequent compliance analyses for the same enforcement authority during the 30-day period.

9.3.7.3 The concentrations of the audit samples obtained by the analyst shall agree within the values specified by the compliance auditor. If the specified range is not met, reanalyze the compliance and audit samples, and include initial and reanalysis values in the test report.

9.3.7.4 Failure to meet the specified range may require retests unless the audit problems are resolved. However, if the audit results do not affect the compliance or noncompliance status of the affected facility, the Administrator may waive the reanalysis requirement, further audits, or retests and accept the results of the compliance test. While steps are being taken to resolve audit analysis problems, the Administrator may also choose to use the data to determine the compliance or noncompliance status of the affected facility.

10.0 Calibration and Standardization

10.1 Sampling Train Calibration. Perform calibrations described in Method 5, (40 CFR Part 60, Appendix A). The alternate calibration procedures described in Method 5, may also be used.

10.2 ICP Calibration.

10.2.1 Calibrate the instrument according to the instrument manufacturer's recommended procedures, using a calibration blank and three standards for the initial calibration.

10.2.2 Calibration standards should be prepared fresh daily, as described in Section 7.3.8. Be sure that samples and calibration standards are matrix matched. Flush the system with the calibration blank between each standard.

10.2.3 Use the average intensity of multiple exposures (3 or more) for both standardization and sample analysis to reduce random error.

10.2.4 Employing linear regression, calculate the correlation coefficient .

10.2.5 The correlation coefficient must equal or exceed 0.995.

10.2.6 If linearity is not acceptable, prepare and rerun another set of calibration standards or reduce the range of the calibration standards, as necessary.

10.3 GFAAS Calibration.

10.3.1 For instruments that measure directly in concentration, set the instrument software to display the correct concentration, if applicable.

10.3.2 Curve must be linear in order to correctly perform the method of standard additions which is customarily performed automatically with most instrument computer-based data systems.

10.3.3 The calibration curve (direct calibration or standard additions) must be prepared daily with a minimum of a calibration blank and three standards that are prepared fresh daily.

10.3.4 The calibration curve acceptance criteria must equal or exceed 0.995.

10.3.5 If linearity is not acceptable, prepare and rerun another set of calibration standards or reduce the range of calibration standards, as necessary.

10.4 IC/PCR Calibration.

10.4.1 Prepare a calibration curve using the calibration blank and three calibration standards prepared fresh daily as described in Section 7.3.8.

10.4.2 The calibration curve acceptance criteria must equal or exceed 0.995.

10.4.3 If linearity is not acceptable, remake and/or rerun the calibration standards. If the calibration curve is still unacceptable, reduce the range of the curve.

10.4.4 Analyze the standards with the field samples as described in Section 11.6.

11.0 Analytical Procedures

NOTE: The method determines the chromium concentration in μg Cr/mL. It is important that the analyst measure the field sample volume prior to analyzing the sample. This will allow for conversion of μg Cr/mL to μg Cr/sample.

11.1 ICP Sample Preparation.

11.1.1 The ICP analysis is performed directly on the alkaline impinger solution; acid digestion is not necessary, provided the samples and standards are matrix matched.

11.1.2 The ICP analysis should only be employed when the solution analyzed has a Cr concentration greater than 35 μg/L or five times the method detection limit as determined according to Appendix B in 40 CFR Part 136 or by other commonly accepted analytical procedures.

11.2 ICP Sample Analysis.

11.2.1 The ICP analysis is applicable for the determination of total chromium only.

11.2.2 ICP Blanks. Two types of blanks are required for the ICP analysis.

11.2.2.1 Calibration Blank. The calibration blank is used in establishing the calibration curve. For the calibration blank, use either 0.1 N NaOH or 0.1 N $NaHCO_3$, whichever is used for the impinger absorbing solution. The calibration blank can be prepared fresh in the laboratory; it does not have to be prepared from the same batch of solution that was used in the field. A sufficient quantity should be prepared to flush the system between standards and samples.

11.2.2.2 Field Reagent Blank. The field reagent blank is collected in the field during the testing program. The field reagent blank (Section 8.2.4) is an aliquot of the absorbing solution prepared in Section 7.1.2. The reagent blank is used to assess possible contamination resulting from sample processing.

11.2.3 ICP Instrument Adjustment.

11.2.3.1 Adjust the ICP instrument for proper operating parameters including wavelength, background correction settings (if necessary), and interfering element correction settings (if necessary).

11.2.3.2 The instrument must be allowed to become thermally stable before beginning measurements (usually requiring at least 30

min of operation prior to calibration). During this warmup period, the optical calibration and torch position optimization may be performed (consult the operator's manual).

11.2.4 ICP Instrument Calibration.

11.2.4.1 Calibrate the instrument according to the instrument manufacturer's recommended procedures, and the procedures specified in Section 10.2.

11.2.4.2 Prior to analyzing the field samples, reanalyze the highest calibration standard as if it were a sample.

11.2.4.3 Concentration values obtained should not deviate from the actual values or from the established control limits by more than 5 percent, whichever is lower (see Sections 9.1 and 10.2).

11.2.4.4 If they do, follow the recommendations of the instrument manufacturer to correct the problem.

11.2.5 ICP Operational Quality Control Procedures.

11.2.5.1 Flush the system with the calibration blank solution for at least 1 min before the analysis of each sample or standard.

11.2.5.2 Analyze the continuing check standard and the calibration blank after each batch of 10 samples.

11.2.5.3 Use the average intensity of multiple exposures for both standardization and sample analysis to reduce random error.

11.2.6 ICP Sample Dilution.

11.2.6.1 Dilute and reanalyze samples that are more concentrated than the linear calibration limit or use an alternate, less sensitive Cr wavelength for which quality control data have already been established.

11.2.6.2 When dilutions are performed, the appropriate factors must be applied to sample measurement results.

11.2.7 Reporting Analytical Results. All analytical results should be reported in μg Cr/mL using three significant figures. Field sample volumes (mL) must be reported also.

11.3 GFAAS Sample Preparation.

11.3.1 GFAAS Acid Digestion. An acid digestion of the alkaline impinger solution is required for the GFAAS analysis.

11.3.1.1 In a beaker, add 10 mL of concentrated HNO_3 to a 100 mL sample aliquot that has been well mixed. Cover the beaker with a watch glass. Place the beaker on a hot plate and reflux the sample to near dryness. Add another 5 mL of concentrated HNO_3 to complete the digestion. Again, carefully reflux the sample volume to near dryness. Rinse the beaker walls and watch glass with reagent water.

11.3.1.2 The final concentration of HNO_3 in the solution should be 1 percent (v/v).

11.3.1.3 Transfer the digested sample to a 50-mL volumetric flask. Add 0.5 mL of concentrated HNO_3 and 1 mL of the 10 μg/mL of $Ca(NO_3)_2$. Dilute to 50 mL with reagent water.

11.3.2 HNO_3 Concentration. A different final volume may be used based on the expected Cr concentration, but the HNO_3 concentration must be maintained at 1 percent (v/v).

11.4 GFAAS Sample Analysis.

11.4.1 The GFAAS analysis is applicable for the determination of total chromium only.

11.4.2 GFAAS Blanks. Two types of blanks are required for the GFAAS analysis.

11.4.2.1 Calibration Blank. The 1.0 percent HNO_3 is the calibration blank which is used in establishing the calibration curve.

11.4.2.2 Field Reagent Blank. An aliquot of the 0.1 N NaOH solution or the 0.1 N $NaHCO_3$ prepared in Section 7.1.2 is collected for the field reagent blank. The field reagent blank is used to assess possible contamination resulting from processing the sample.

11.4.2.2.1 The reagent blank must be subjected to the entire series of sample preparation and analytical procedures, including the acid digestion.

11.4.2.2.2 The reagent blank's final solution must contain the same acid concentration as the sample solutions.

11.4.3 GFAAS Instrument Adjustment.

11.4.3.1 The 357.9 nm wavelength line shall be used.

11.4.3.2 Follow the manufacturer's instructions for all other spectrophotometer operating parameters.

11.4.4 Furnace Operational Parameters. Parameters suggested by the manufacturer should be employed as guidelines.

11.4.4.1 Temperature-sensing mechanisms and temperature controllers can vary between instruments and/or with time; the validity of the furnace operating parameters must be periodically confirmed by systematically altering the furnace parameters while analyzing a standard. In this manner, losses of analyte due to higher-than-necessary temperature settings or losses in sensitivity due to less than optimum settings can be minimized.

11.4.4.2 Similar verification of furnace operating parameters may be required for complex sample matrices (consult instrument manual for additional information). Calibrate the GFAAS system following the procedures specified in Section 10.3.

11.4.5 GFAAS Operational Quality Control Procedures.

11.4.5.1 Introduce a measured aliquot of digested sample into the furnace and atomize.

11.4.5.2 If the measured concentration exceeds the calibration range, the sample should be diluted with the calibration blank solution (1.0 percent HNO_3) and reanalyzed.

11.4.5.3 Consult the operator's manual for suggested injection volumes. The use of multiple injections can improve accuracy and assist in detecting furnace pipetting errors.

11.4.5.4 Analyze a minimum of one matrix-matched reagent blank per sample batch

to determine if contamination or any memory effects are occurring.

11.4.5.5 Analyze a calibration blank and a continuing check standard after approximately every batch of 10 sample injections.

11.4.6 GFAAS Sample Dilution.

11.4.6.1 Dilute and reanalyze samples that are more concentrated than the instrument calibration range.

11.4.6.2 If dilutions are performed, the appropriate factors must be applied to sample measurement results.

11.4.7 Reporting Analytical Results.

11.4.7.1 Calculate the Cr concentrations by the method of standard additions (see operator's manual) or, from direct calibration. All dilution and/or concentration factors must be used when calculating the results.

11.4.7.2 Analytical results should be reported in µg Cr/mL using three significant figures. Field sample volumes (mL) must be reported also.

11.5 IC/PCR Sample Preparation.

11.5.1 Sample pH. Measure and record the sample pH prior to analysis.

11.5.2 Sample Filtration. Prior to preconcentration and/or analysis, filter all field samples through a 0.45-µm filter. The filtration step should be conducted just prior to sample injection/analysis.

11.5.2.1 Use a portion of the sample to rinse the syringe filtration unit and acetate filter and then collect the required volume of filtrate.

11.5.2.2 Retain the filter if total Cr is to be determined also.

11.5.3 Sample Preconcentration (older instruments).

11.5.3.1 For older instruments, a preconcentration system may be used in conjunction with the IC/PCR to increase sensitivity for trace levels of Cr^{+6}.

11.5.3.2 The preconcentration is accomplished by selectively retaining the analyte on a solid absorbent, followed by removal of the analyte from the absorbent (consult instrument manual).

11.5.3.3 For a manual system, position the injection valve so that the eluent displaces the concentrated Cr^{+6} sample, transferring it from the preconcentration column and onto the IC anion separation column.

11.6 IC/PCR Sample Analyses.

11.6.1 The IC/PCR analysis is applicable for hexavalent chromium measurements only.

11.6.2 IC/PCR Blanks. Two types of blanks are required for the IC/PCR analysis.

11.6.2.1 Calibration Blank. The calibration blank is used in establishing the analytical curve. For the calibration blank, use either 0.1 N NaOH or 0.1 N $NaHCO_3$, whichever is used for the impinger solution. The calibration blank can be prepared fresh in the laboratory; it does not have to be prepared from the same batch of absorbing solution that is used in the field.

11.6.2.2 Field Reagent Blank. An aliquot of the 0.1 N NaOH solution or the 0.1 N $NaHCO_3$ solution prepared in Section 7.1.2 is collected for the field reagent blank. The field reagent blank is used to assess possible contamination resulting from processing the sample.

11.6.3 Stabilized Baseline. Prior to sample analysis, establish a stable baseline with the detector set at the required attenuation by setting the eluent and post-column reagent flow rates according to the manufacturers recommendations.

NOTE: As long as the ratio of eluent flow rate to PCR flow rate remains constant, the standard curve should remain linear. Inject a sample of reagent water to ensure that no Cr^{+6} appears in the water blank.

11.6.4 Sample Injection Loop. Size of injection loop is based on standard/sample concentrations and the selected attenuator setting.

11.6.4.1 A 50-µL loop is normally sufficient for most higher concentrations.

11.6.4.2 The sample volume used to load the injection loop should be at least 10 times the loop size so that all tubing in contact with the sample is thoroughly flushed with the new sample to prevent cross contamination.

11.6.5 IC/PCR Instrument Calibration.

11.6.5.1 First, inject the calibration standards prepared, as described in Section 7.3.8 to correspond to the appropriate concentration range, starting with the lowest standard first.

11.6.5.2 Check the performance of the instrument and verify the calibration using data gathered from analyses of laboratory blanks, calibration standards, and a quality control sample.

11.6.5.3 Verify the calibration by analyzing a calibration reference standard. If the measured concentration exceeds the established value by more than 10 percent, perform a second analysis. If the measured concentration still exceeds the established value by more than 10 percent, terminate the analysis until the problem can be identified and corrected.

11.6.6 IC/PCR Instrument Operation.

11.6.6.1 Inject the calibration reference standard (as described in Section 9.3.1), followed by the field reagent blank (Section 8.2.4), and the field samples.

11.6.6.1.1 Standards (and QC standards) and samples are injected into the sample loop of the desired size (use a larger size loop for greater sensitivity). The Cr^{+6} is collected on the resin bed of the column.

11.6.6.1.2 After separation from other sample components, the Cr^{+6} forms a specific complex in the post-column reactor with the DPC reaction solution, and the complex is detected by visible absorbance at a maximum wavelength of 540 nm.

11.6.6.1.3 The amount of absorbance measured is proportional to the concentration of the Cr^{+6} complex formed.

11.6.6.1.4 The IC retention time and the absorbance of the Cr^{+6} complex with known Cr^{+6} standards analyzed under identical conditions must be compared to provide both qualitative and quantitative analyses.

11.6.6.1.5 If a sample peak appears near the expected retention time of the Cr^{+6} ion, spike the sample according to Section 9.3.4 to verify peak identity.

11.6.7 IC/PCR Operational Quality Control Procedures.

11.6.7.1 Samples should be at a pH ≥8.5 for NaOH and ≥8.0 if using $NaHCO_3$; document any discrepancies.

11.6.7.2 Refrigerated samples should be allowed to equilibrate to ambient temperature prior to preparation and analysis.

11.6.7.3 Repeat the injection of the calibration standards at the end of the analytical run to assess instrument drift. Measure areas or heights of the Cr^{+6}/DPC complex chromatogram peaks.

11.6.7.4 To ensure the precision of the sample injection (manual or autosampler), the response for the second set of injected standards must be within 10 percent of the average response.

11.6.7.5 If the 10 percent criteria duplicate injection cannot be achieved, identify the source of the problem and rerun the calibration standards.

11.6.7.6 Use peak areas or peak heights from the injections of calibration standards to generate a linear calibration curve. From the calibration curve, determine the concentrations of the field samples.

11.6.8 IC/PCR Sample Dilution.

11.6.8.1 Samples having concentrations higher than the established calibration range must be diluted into the calibration range and re-analyzed.

11.6.8.2 If dilutions are performed, the appropriate factors must be applied to sample measurement results.

11.6.9 Reporting Analytical Results. Results should be reported in µg Cr^{+6}/mL using three significant figures. Field sample volumes (mL) must be reported also.

12.0 Data Analysis and Calculations

12.1 Pretest Calculations.

12.1.1 Pretest Protocol (Site Test Plan).

12.1.1.1 The pretest protocol should define and address the test data quality objectives (DQOs), with all assumptions, that will be required by the end user (enforcement authority); what data are needed? why are the data needed? how will the data be used? what are method detection limits? and what are estimated target analyte levels for the following test parameters.

12.1.1.1.1 Estimated source concentration for total chromium and/or Cr^{+6}.

12.1.1.1.2 Estimated minimum sampling time and/or volume required to meet method detection limit requirements (Appendix B 40 CFR Part 136) for measurement of total chromium and/or Cr^{+6}.

12.1.1.1.3 Demonstrate that planned sampling parameters will meet DQOs. The protocol must demonstrate that the planned sampling parameters calculated by the tester will meet the needs of the source and the enforcement authority.

12.1.1.2 The pre-test protocol should include information on equipment, logistics, personnel, process operation, and other resources necessary for an efficient and coordinated test.

12.1.1.3 At a minimum, the pre-test protocol should identify and be approved by the source, the tester, the analytical laboratory, and the regulatory enforcement authority. The tester should not proceed with the compliance testing before obtaining approval from the enforcement authority.

12.1.2 Post Test Calculations.

12.1.2.1 Perform the calculations, retaining one extra decimal figure beyond that of the acquired data. Round off figures after final calculations.

12.1.2.2 Nomenclature.

C_S = Concentration of Cr in sample solution, µg Cr/mL.

C_{cr} = Concentration of Cr in stack gas, dry basis, corrected to standard conditions, mg/dscm.

D = Digestion factor, dimension less.

F = Dilution factor, dimension less.

M_{Cr} = Total Cr in each sample, µg.

V_{ad} = Volume of sample aliquot after digestion, mL.

V_{af} = Volume of sample aliquot after dilution, mL.

V_{bd} = Volume of sample aliquot submitted to digestion, mL.

V_{bf} = Volume of sample aliquot before dilution, mL.

V_{mL} = Volume of impinger contents plus rinses, mL.

$V_{m(std)}$ = Volume of gas sample measured by the dry gas meter, corrected to standard conditions, dscm.

12.1.2.3 Dilution Factor. The dilution factor is the ratio of the volume of sample aliquot after dilution to the volume before dilution. This ratio is given by the following equation:

$$F = \frac{V_{af}}{V_{bf}} \qquad \text{Eq. 306-1}$$

12.1.2.4 Digestion Factor. The digestion factor is the ratio of the volume of sample aliquot after digestion to the volume before digestion. This ratio is given by Equation 306–2.

$$D = \frac{V_{ad}}{V_{bd}} \qquad \text{Eq. 306-2}$$

12.1.2.5 Total Cr in Sample. Calculate MCr, the total μg Cr in each sample, using the following equation:

$$M_{cr} = V_{mL} \times C_S \times F \times D \qquad \text{Eq. 306-3}$$

12.1.2.6 Average Dry Gas Meter Temperature and Average Orifice Pressure Drop. Same as Method 5.

12.1.2.7 Dry Gas Volume, Volume of Water Vapor, Moisture Content. Same as Method 5.

12.1.2.8 Cr Emission Concentration (C_{Cr}). Calculate C_{Cr}, the Cr concentration in the stack gas, in mg/dscm on a dry basis, corrected to standard conditions using the following equation:

$$C_{Cr} = \frac{M_{Cr}}{V_{m(std)}} \times 10^{-3} \frac{mg}{\mu g} \qquad \text{Eq. 306-4}$$

12.1.2.9 Isokinetic Variation, Acceptable Results. Same as Method 5.

13.0 Method Performance

13.1 Range. The recommended working range for all of the three analytical techniques starts at five times the analytical detection limit (see also Section 13.2.2). The upper limit of all three techniques can be extended indefinitely by appropriate dilution.

13.2 Sensitivity.

13.2.1 Analytical Sensitivity. The estimated instrumental detection limits listed are provided as a guide for an instrumental limit. The actual method detection limits are sample and instrument dependent and may vary as the sample matrix varies.

13.2.1.2 ICP Analytical Sensitivity. The minimum estimated detection limits for ICP, as reported in Method 6010A and the recently revised Method 6010B of SW–846 (Reference 1), are 7.0 μg Cr/L and 4.7 μg Cr/L, respectively.

13.2.1.3 GFAAS Analytical Sensitivity. The minimum estimated detection limit for GFAAS, as reported in Methods 7000A and 7191 of SW–846 (Reference 1), is 1 μg Cr/L.

13.2.1.4 IC/PCR Analytical Sensitivity. The minimum detection limit for IC/PCR with a preconcentrator, as reported in Methods 0061 and 7199 of SW–846 (Reference 1), is 0.05 μg Cr^{+6}/L.

1.3.2.1.5 Determination of Detection Limits. The laboratory performing the Cr^{+6} measurements must determine the method detection limit on a quarterly basis using a suitable procedure such as that found in 40 CFR, Part 136, Appendix B. The determination should be made on samples in the appropriate alkaline matrix. Normally this involves the preparation (if applicable) and consecutive measurement of seven (7) separate aliquots of a sample with a concentration <5 times the expected detection limit. The detection limit is 3.14 times the standard deviation of these results.

13.2.2 In-stack Sensitivity. The in-stack sensitivity depends upon the analytical detection limit, the volume of stack gas sampled, the total volume of the impinger absorbing solution plus the rinses, and, in some cases, dilution or concentration factors from sample preparation. Using the analytical detection limits given in Sections 13.2.1.1, 13.2.1.2, and 13.2.1.3; a stack gas sample volume of 1.7 dscm; a total liquid sample volume of 500 mL; and the digestion concentration factor of 1/2 for the GFAAS analysis; the corresponding in-stack detection limits are 0.0014 mg Cr/dscm to 0.0021 mg Cr/dscm for ICP, 0.00015 mg Cr/dscm for GFAAS, and 0.000015 mg Cr^{+6}/dscm for IC/PCR with preconcentration.

NOTE: It is recommended that the concentration of Cr in the analytical solutions be at least five times the analytical detection limit to optimize sensitivity in the analyses. Using this guideline and the same assumptions for impinger sample volume, stack gas sample volume, and the digestion concentration factor for the GFAAS analysis (500 mL,1.7 dscm, and 1/2, respectively), the recommended minimum stack concentrations for optimum sensitivity are 0.0068 mg Cr/dscm to 0.0103 mg Cr/dscm for ICP, 0.00074 mg Cr/dscm for GFAAS, and 0.000074 mg Cr^{+6}/dscm for IC/PCR with preconcentration. If required, the in-stack detection limits can be improved by either increasing the stack gas sample volume, further reducing the volume of the digested sample for GFAAS, improving the analytical detection limits, or any combination of the three.

13.3 Precision.

13.3.1 The following precision data have been reported for the three analytical methods. In each case, when the sampling precision is combined with the reported analytical precision, the resulting overall precision may decrease.

13.3.2 Bias data is also reported for GFAAS.

13.4 ICP Precision.

13.4.1 As reported in Method 6010B of SW–846 (Reference 1), in an EPA round-robin Phase 1 study, seven laboratories applied the ICP technique to acid/distilled water matrices that had been spiked with various metal concentrates. For true values of 10, 50, and 150 µg Cr/L; the mean reported values were 10, 50, and 149 µg Cr/L; and the mean percent relative standard deviations were 18, 3.3, and 3.8 percent, respectively.

13.4.2 In another multi laboratory study cited in Method 6010B, a mean relative standard of 8.2 percent was reported for an aqueous sample concentration of approximately 3750 µg Cr/L.

13.5 GFAAS Precision. As reported in Method 7191 of SW–846 (Reference 1), in a single laboratory (EMSL), using Cincinnati, Ohio tap water spiked at concentrations of 19, 48, and 77 µg Cr/L, the standard deviations were ±0.1, ±0.2, and ±0.8, respectively. Recoveries at these levels were 97 percent, 101 percent, and 102 percent, respectively.

13.6 IC/PCR Precision. As reported in Methods 0061 and 7199 of SW–846 (Reference 1), the precision of IC/PCR with sample preconcentration is 5 to 10 percent. The overall precision for sewage sludge incinerators emitting 120 ng/dscm of Cr^{+6} and 3.5 µg/dscm of total Cr was 25 percent and 9 percent, respectively; and for hazardous waste incinerators emitting 300 ng/dscm of C^{+6} the precision was 20 percent.

14.0 Pollution Prevention

14.1 The only materials used in this method that could be considered pollutants are the chromium standards used for instrument calibration and acids used in the cleaning of the collection and measurement containers/labware, in the preparation of standards, and in the acid digestion of samples. Both reagents can be stored in the same waste container.

14.2 Cleaning solutions containing acids should be prepared in volumes consistent with use to minimize the disposal of excessive volumes of acid.

14.3 To the extent possible, the containers/vessels used to collect and prepare samples should be cleaned and reused to minimize the generation of solid waste.

15.0 Waste Management

15.1 It is the responsibility of the laboratory and the sampling team to comply with all federal, state, and local regulations governing waste management, particularly the discharge regulations, hazardous waste identification rules, and land disposal restrictions; and to protect the air, water, and land by minimizing and controlling all releases from field operations.

15.2 For further information on waste management, consult The Waste Management Manual for Laboratory Personnel and Less is Better—Laboratory Chemical Management for Waste Reduction, available from the American Chemical Society's Department of Government Relations and Science Policy, 1155 16th Street NW, Washington, DC 20036.

16.0 References

1. ''Test Methods for Evaluating Solid Waste, Physical/Chemical Methods, SW–846, Third Edition,'' as amended by Updates I, II, IIA, IIB, and III. Document No. 955–001–000001. Available from Superintendent of Documents, U.S. Government Printing Office, Washington, DC, November 1986.

2. Cox, X.B., R.W. Linton, and F.E. Butler. Determination of Chromium Speciation in Environmental Particles—A Multi-technique

Study of Ferrochrome Smelter Dust. Accepted for publication in Environmental Science and Technology.

3. Same as Section 17.0 of Method 5, References 2, 3, 4, 5, and 7.

4. California Air Resources Board, ''Determination of Total Chromium and Hexavalent Chromium Emissions from Stationary Sources.'' Method 425, September 12, 1990.

5. *The Merck Index*. Eleventh Edition. Merck & Co., Inc., 1989.

6. Walpole, R.E., and R.H. Myers. ''Probability and Statistics for Scientists and Engineering.'' 3rd Edition. MacMillan Publishing Co., NewYork, N.Y., 1985.

17.0 Tables, Diagrams, Flowcharts, and Validation Data

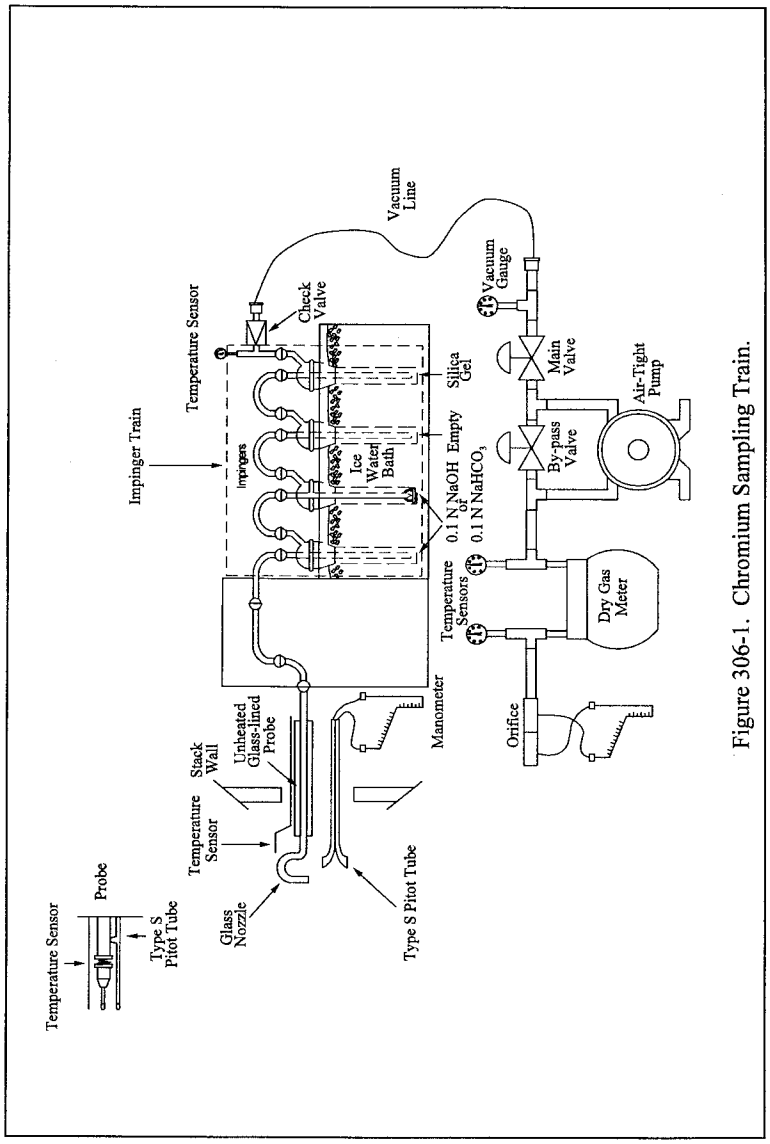

Figure 306-1. Chromium Sampling Train.

Plant _____
Location _____
Operator _____
Date _____
Run No. _____
Sample box No. _____
Meter box No. _____
Meter $\Delta H@$ _____
C factor _____
Pitot tube coefficient, C_p _____

SCHEMATIC OF STACK CROSS SECTION

Ambient temperature _____
Barometric pressure _____
Assumed moisture, % _____
Probe length, (ft.) _____
Nozzle identification No. _____
Average calibrated nozzle diameter, (in.) _____
Leak rate, (cfm) _____
Static pressure, (in. Hg) _____

Traverse point number	Sampling time	Vacuum	Stack temperature	Velocity head	Pressure differential across orifice meter	Gas meter reading	Gas sample temperature at dry gas meter		Temperature of gas leaving condenser or last impinger
							Inlet	Outlet	
	min.	(in. Hg)	(T_s) (°F)	(ΔP_s) (in. H_2O)	(in. H_2O)	(ft^3)	(°F)	(°F)	(°F)
Total							Avg.	Avg.	
Average							Avg.		

Figure 306-2. Chromium Field Data Sheet.

METHOD 306A—DETERMINATION OF CHROMIUM EMISSIONS FROM DECORATIVE AND HARD CHROMIUM ELECTROPLATING AND CHROMIUM ANODIZING OPERATIONS

NOTE: This method does not include all of the specifications (*e.g.*, equipment and supplies) and procedures (*e.g.*, sampling and analytical) essential to its performance. Some material is incorporated by reference from other methods in 40 CFR Part 60, Appendix A and in this part. Therefore, to obtain reliable results, persons using this method should have a thorough knowledge of at least Methods 5 and 306.

1.0 Scope and Application

1.1 Analyte. Chromium. CAS Number (7440–47–3).

1.2 Applicability.

1.2.1 This method applies to the determination of chromium (Cr) in emissions from decorative and hard chromium electroplating facilities, chromium anodizing operations, and continuous chromium plating at iron and steel facilities. The method is less expensive and less complex to conduct than Method 306. Correctly applied, the precision and bias of the sample results should be comparable to those obtained with the isokinetic Method 306. This method is applicable for the determination of air emissions under nominal ambient moisture, temperature, and pressure conditions.

1.2.2 The method is also applicable to electroplating and anodizing sources controlled by wet scrubbers.

1.3 Data Quality Objectives.

1.3.1 Pretest Protocol.

1.3.1.1 The pretest protocol should define and address the test data quality objectives (DQOs), with all assumptions, that will be required by the end user (enforcement authority); what data are needed? why are the data needed? how will data be used? what are method detection limits? and what are estimated target analyte levels for the following test parameters.

1.3.1.1.1 Estimated source concentration for total chromium and/or Cr^{+6}.

1.3.1.1.2 Estimated minimum sampling time and/or volume required to meet method detection limit requirements (Appendix B 40 CFR Part 136) for measurement of total chromium and/or Cr^{+6}.

1.3.1.1.3 Demonstrate that planned sampling parameters will meet DQOs. The protocol must demonstrate that the planned sampling parameters calculated by the tester will meet the needs of the source and the enforcement authority.

1.3.1.2 The pre-test protocol should include information on equipment, logistics, personnel, process operation, and other resources necessary for an efficient and coordinated performance test.

1.3.1.3 At a minimum, the pre-test protocol should identify and be approved by the source, the tester, the analytical laboratory, and the regulatory enforcement authority. The tester should not proceed with the compliance testing before obtaining approval from the enforcement authority.

2.0 Summary of Method

2.1 Sampling.

2.1.1 An emission sample is extracted from the source at a constant sampling rate determined by a critical orifice and collected in a sampling train composed of a probe and impingers. The proportional sampling time at the cross sectional traverse points is varied according to the stack gas velocity at each point. The total sample time must be at least two hours.

2.1.2 The chromium emission concentration is determined by the same analytical procedures described in Method 306: inductively-coupled plasma emission spectrometry (ICP), graphite furnace atomic absorption spectrometry (GFAAS), or ion chromatography with a post-column reactor (IC/PCR).

2.1.2.1 Total chromium samples with high chromium concentrations (≥35 μg/L) may be analyzed using inductively coupled plasma emission spectrometry (ICP) at 267.72 nm.

NOTE: The ICP analysis is applicable for this method only when the solution analyzed has a Cr concentration greater than or equal to 35 μg/L or five times the method detection limit as determined according to Appendix B in 40 CFR Part 136.

2.1.2.2 Alternatively, when lower total chromium concentrations (<35 μg/L) are encountered, a portion of the alkaline sample solution may be digested with nitric acid and analyzed by graphite furnace atomic absorption spectroscopy (GFAAS) at 357.9 nm.

2.1.2.3 If it is desirable to determine hexavalent chromium (Cr^{+6}) emissions, the samples may be analyzed using an ion chromatograph equipped with a post-column reactor (IC/PCR) and a visible wavelength detector. To increase sensitivity for trace levels of Cr^{+6}, a preconcentration system may be used in conjunction with the IC/PCR.

3.0 Definitions

3.1 *Total Chromium*—measured chromium content that includes both major chromium oxidation states (Cr+3, Cr+6).

3.2 *May*—Implies an optional operation.

3.3 *Digestion*—The analytical operation involving the complete (or nearly complete) dissolution of the sample in order to ensure the complete solubilization of the element (analyte) to be measured.

3.4 *Interferences*—Physical, chemical, or spectral phenomena that may produce a high or low bias in the analytical result.

3.5 *Analytical System*—All components of the analytical process including the sample digestion and measurement apparatus.

3.6 *Sample Recovery*—The quantitative transfer of sample from the collection apparatus to the sample preparation (digestion, etc.) apparatus. This term should not be confused with analytical recovery.

4.0 Interferences

4.1 Same as in Method 306, Section 4.0.

5.0 Safety

5.1 Disclaimer. This method may involve hazardous materials, operations, and equipment. This test method does not purport to address all of the safety issues associated with its use. It is the responsibility of the user to establish appropriate safety and

health practices and to determine the applicability of regulatory limitations prior to performing this test method.

5.2 Chromium and some chromium compounds have been listed as carcinogens although Chromium (III) compounds show little or no toxicity. Chromium is a skin and respiratory irritant.

6.0 Equipment and Supplies

NOTE: Mention of trade names or specific products does not constitute endorsement by the Environmental Protection Agency.

6.1 Sampling Train. A schematic of the sampling train is shown in Figure 306A–1. The individual components of the train are available commercially, however, some fabrication and assembly are required.

6.1.1 Probe Nozzle/Tubing and Sheath.

6.1.1.1 Use approximately 6.4-mm (¼-in.) inside diameter (ID) glass or rigid plastic tubing approximately 20 cm (8 in.) in length with a short 90 degree bend at one end to form the sampling nozzle. Grind a slight taper on the nozzle end before making the bend. Attach the nozzle to flexible tubing of sufficient length to enable collection of a sample from the stack.

6.1.1.2 Use a straight piece of larger diameter rigid tubing (such as metal conduit or plastic water pipe) to form a sheath that begins about 2.5 cm (1 in.) from the 90 ° bend on the nozzle and encases and supports the flexible tubing.

6.1.2 Type S Pitot Tube. Same as Method 2, Section 6.1 (40 CFR Part 60, Appendix A).

6.1.3 Temperature Sensor.

6.1.3.1 A thermocouple, liquid-filled bulb thermometer, bimetallic thermometer, mercury-in-glass thermometer, or other sensor capable of measuring temperature to within 1.5 percent of the minimum absolute stack temperature.

6.1.3.2 The temperature sensor shall either be positioned near the center of the stack, or be attached to the pitot tube as directed in Section 6.3 of Method 2.

6.1.4 Sample Train Connectors.

6.1.4.1 Use thick wall flexible plastic tubing (polyethylene, polypropylene, or polyvinyl chloride) ~ 6.4-mm (¼-in.) to 9.5-mm (⅜-in.) ID to connect the train components.

6.1.4.2 A combination of rigid plastic tubing and thin wall flexible tubing may be used as long as tubing walls do not collapse when leak-checking the train. Metal tubing cannot be used.

6.1.5 Impingers. Three, one-quart capacity, glass canning jars with vacuum seal lids, or three Greenburg-Smith (GS) design impingers connected in series, or equivalent, may be used.

6.1.5.1 One-quart glass canning jar. Three separate jar containers are required: (1) the first jar contains the absorbing solution; (2) the second is empty and is used to collect any reagent carried over from the first container; and (3) the third contains the desiccant drying agent.

6.1.5.2 Canning Jar Connectors. The jar containers are connected by leak-tight inlet and outlet tubes installed in the lids of each container for assembly with the train. The tubes may be made of ~ 6.4 mm (¼-in.) ID glass or rigid plastic tubing. For the inlet tube of the first impinger, heat the glass or plastic tubing and draw until the tubing separates. Fabricate the necked tip to form an orifice tip that is approximately 2.4 mm (3⁄32-in.) ID.

6.1.5.2.1 When assembling the first container, place the orifice tip end of the tube approximately 4.8 mm (3⁄16-in.) above the inside bottom of the jar.

6.1.5.2.2 For the second container, the inlet tube need not be drawn and sized, but the tip should be approximately 25 mm (1 in.) above the bottom of the jar.

6.1.5.2.3 The inlet tube of the third container should extend to approximately 12.7 mm (½-in.) above the bottom of the jar.

6.1.5.2.4 Extend the outlet tube for each container approximately 50 mm (2 in.) above the jar lid and downward through the lid, approximately 12.7 mm (½-in.) beneath the bottom of the lid.

6.1.5.3 Greenburg-Smith Impingers. Three separate impingers of the Greenburg-Smith (GS) design as described in Section 6.0 of Method 5 are required. The first GS impinger shall have a standard tip (orifice/plate), and the second and third GS impingers shall be modified by replacing the orifice/plate tube with a 13 mm (½-in.) ID glass tube, having an unrestricted opening located 13 mm (½-in.) from the bottom of the outer flask.

6.1.5.4 Greenburg-Smith Connectors. The GS impingers shall be connected by leak-free ground glass ''U'' tube connectors or by leak-free non-contaminating flexible tubing. The first impinger shall contain the absorbing solution, the second is empty and the third contains the desiccant drying agent.

6.1.6 Manometer. Inclined/vertical type, or equivalent device, as described in Section 6.2 of Method 2 (40 CFR Part 60, Appendix A).

6.1.7 Critical Orifice. The critical orifice is a small restriction in the sample line that is located upstream of the vacuum pump. The orifice produces a constant sampling flow rate that is approximately 0.021 cubic meters per minute (m^3/min) or 0.75 cubic feet per minute (cfm).

6.1.7.1 The critical orifice can be constructed by sealing a 2.4-mm (3⁄32-in.) ID brass tube approximately 14.3 mm (9⁄16-in.) in length inside a second brass tube that is approximately 8 mm (5⁄16-in.) ID and 14.3-mm (9⁄16-in.) in length .

6.1.7.2 Materials other than brass can be used to construct the critical orifice as long as the flow through the sampling train can be maintained at approximately 0.021 cubic meter per minute (0.75) cfm.

6.1.8 Connecting Hardware. Standard pipe and fittings, 9.5-mm (3/8-in.), 6.4-mm (1/4-in.) or 3.2-mm (1/8-in.) ID, may be used to assemble the vacuum pump, dry gas meter and other sampling train components.

6.1.9 Vacuum Gauge. Capable of measuring approximately 760 mm H_g (30 in. H_g) vacuum in 25.4 mm H_G (1 in. H_g) increments. Locate vacuum gauge between the critical orifice and the vacuum pump.

6.1.10 Pump Oiler. A glass oil reservoir with a wick mounted at the vacuum pump inlet that lubricates the pump vanes. The oiler should be an in-line type and not vented to the atmosphere. See EMTIC Guideline Document No. GD-041.WPD for additional information.

6.1.11 Vacuum Pump. Gast Model 0522–V103–G18DX, or equivalent, capable of delivering at least 1.5 cfm at 15 in. H_g vacuum.

6.1.12 Oil Trap/Muffler. An empty glass oil reservoir without wick mounted at the pump outlet to control the pump noise and prevent oil from reaching the dry gas meter.

6.1.13 By-pass Fine Adjust Valve (Optional). Needle valve assembly 6.4-mm (1/4-in.), Whitey 1 RF 4–A, or equivalent, that allows for adjustment of the train vacuum.

6.1.13.1 A fine-adjustment valve is positioned in the optional pump by-pass system that allows the gas flow to recirculate through the pump. This by-pass system allows the tester to control/reduce the maximum leak-check vacuum pressure produced by the pump.

6.1.13.1.1 The tester must conduct the post test leak check at a vacuum equal to or greater than the maximum vacuum encountered during the sampling run.

6.1.13.1.2 The pump by-pass assembly is not required, but is recommended if the tester intends to leak-check the 306A train at the vacuum experienced during a run.

6.1.14 Dry Gas Meter. An Equimeter Model 110 test meter or, equivalent with temperature sensor(s) installed (inlet/outlet) to monitor the meter temperature. If only one temperature sensor is installed, locate the sensor at the outlet side of the meter. The dry gas meter must be capable of measuring the gaseous volume to within ±2% of the true volume.

NOTE: The Method 306 sampling train is also commercially available and may be used to perform the Method 306A tests. The sampling train may be assembled as specified in Method 306A with the sampling rate being operated at the delta $H_@$ specified for the calibrated orifice located in the meter box. The Method 306 train is then operated as described in Method 306A.

6.2 Barometer. Mercury aneroid barometer, or other barometer equivalent, capable of measuring atmospheric pressure to within ±2.5 mm H_g (0.1 in. H_g).

6.2.1 A preliminary check of the barometer shall be made against a mercury-in-glass reference barometer or its equivalent.

6.2.2 Tester may elect to obtain the absolute barometric pressure from a nearby National Weather Service station.

6.2.2.1 The station value (which is the absolute barometric pressure) must be adjusted for elevation differences between the weather station and the sampling location. Either subtract 2.5 mm H_g (0.1 in. H_g) from the station value per 30 m (100 ft) of elevation increase or add the same for an elevation decrease.

6.2.2.2 If the field barometer cannot be adjusted to agree within 0.1 in. H_g of the reference barometric, repair or discard the unit. The barometer pressure measurement shall be recorded on the sampling data sheet.

6.3 Sample Recovery. Same as Method 5, Section 6.2 (40 CFR Part 60, Appendix A), with the following exceptions:

6.3.1 Probe-Liner and Probe-Nozzle Brushes. Brushes are not necessary for sample recovery. If a probe brush is used, it must be non-metallic.

6.3.2 Wash Bottles. Polyethylene wash bottle, for sample recovery absorbing solution.

6.3.3 Sample Recovery Solution. Use 0.1 N NaOH or 0.1 N $NaHCO_3$, whichever is used as the impinger absorbing solution, to replace the acetone.

6.3.4 Sample Storage Containers.

6.3.4.1 Glass Canning Jar. The first canning jar container of the sampling train may serve as the sample shipping container. A new lid and sealing plastic wrap shall be substituted for the container lid assembly.

6.3.4.2 Polyethylene or Glass Containers. Transfer the Greenburg-Smith impinger contents to precleaned polyethylene or glass containers. The samples shall be stored and shipped in 250-mL, 500-mL or 1000-mL polyethylene or glass containers with leak-free, non metal screw caps.

6.3.5 pH Indicator Strip, for Cr^{+6} Samples. pH indicator strips, or equivalent, capable of determining the pH of solutions between the range of 7 and 12, at 0.5 pH increments.

6.3.6 Plastic Storage Containers. Air tight containers to store silica gel.

6.4 Analysis. Same as Method 306, Section 6.3.

7.0 Reagents and Standards.

NOTE: Unless otherwise indicated, all reagents shall conform to the specifications established by the Committee on Analytical Reagents of the American Chemical Society (ACS reagent grade). Where such specifications are not available, use the best available grade. It is recommended, but not required, that reagents be checked by the appropriate analysis prior to field use to assure that contamination is below the analytical

detection limit for the ICP or GFAAS total chromium analysis; and that contamination is below the analytical detection limit for Cr^{+6} using IC/PCR for direct injection or, if selected, preconcentration.

7.1 Sampling.

7.1.1 Water. Reagent water that conforms to ASTM Specification D1193 Type II (incorporated by reference see §63.14). All references to water in the method refer to reagent water unless otherwise specified. It is recommended that water blanks be checked prior to preparing the sampling reagents to ensure that the Cr content is less than three (3) times the anticipated detection limit of the analytical method.

7.1.2 Sodium Hydroxide (NaOH) Absorbing Solution, 0.1 N. Dissolve 4.0 g of sodium hydroxide in 1 liter of water to obtain a pH of approximately 8.5.

7.1.3 Sodium Bicarbonate ($NaHCO_3$) Absorbing Solution, 0.1 N. Dissolve approximately 8.5 g of sodium bicarbonate in 1 liter of water to obtain a pH of approximately 8.3.

7.1.4 Chromium Contamination.

7.1.4.1 The absorbing solution shall not exceed the QC criteria noted in Method 306, Section 7.1.1 (≤3 times the instrument detection limit).

7.1.4.2 When the Cr^{+6} content in the field samples exceeds the blank concentration by at least a factor of ten (10), Cr^{+6} blank levels ≤10 times the detection limit will be allowed.

NOTE: At sources with high concentrations of acids and/or SO_2, the concentration of NaOH or $NaHCO_3$ should be ≥0.5 N to insure that the pH of the solution remains at or above 8.5 for NaOH and 8.0 for $NaHCO_3$ during and after sampling.

7.1.3 Desiccant. Silica Gel, 6–16 mesh, indicating type. Alternatively, other types of desiccants may be used, subject to the approval of the Administrator.

7.2 Sample Recovery. Same as Method 306, Section 7.2.

7.3 Sample Preparation and Analysis. Same as Method 306, Section 7.3.

7.4 Glassware Cleaning Reagents. Same as Method 306, Section 7.4.

7.5 Quality Assurance Audit Samples.

7.5.1 It is recommended, but not required, that a performance audit sample be analyzed in conjunction with the field samples. The audit sample should be in a suitable sample matrix at a concentration similar to the actual field samples.

7.5.2 When making compliance determinations, and upon availability, audit samples may be obtained from the appropriate EPA regional Office or from the responsible enforcement authority and analyzed in conjunction with the field samples.

NOTE: The responsible enforcement authority should be notified at least 30 days prior to the test date to allow sufficient time for the audit sample to be delivered.

8.0 Sample Collection, Recovery, Preservation, Holding Times, Storage, and Transport

NOTE: Prior to sample collection, consideration should be given as to the type of analysis (Cr^{+6} or total Cr) that will be performed. Deciding which analysis will be performed will enable the tester to determine which appropriate sample recovery and storage procedures will be required to process the sample.

8.1 Sample Collection.

8.1.1 Pretest Preparation.

8.1.1.1 Selection of Measurement Site. Locate the sampling ports as specified in Section 11.0 of Method 1 (40 CFR Part 60, Appendix A).

8.1.1.2 Location of Traverse Points.

8.1.1.2.1 Locate the traverse points as specified in Section 11.0 of Method 1 (40 CFR Part 60, Appendix A). Use a total of 24 sampling points for round ducts and 24 or 25 points for rectangular ducts. Mark the pitot and sampling probe to identify the sample traversing points.

8.1.1.2.2 For round ducts less than 12 inches in diameter, use a total of 16 points.

8.1.1.3 Velocity Pressure Traverse. Perform an initial velocity traverse before obtaining samples. The Figure 306A–2 data sheet may be used to record velocity traverse data.

8.1.1.3.1 To demonstrate that the flow rate is constant over several days of testing, perform complete traverses at the beginning and end of each day's test effort, and calculate the deviation of the flow rate for each daily period. The beginning and end flow rates are considered constant if the deviation does not exceed 10 percent. If the flow rate exceeds the 10 percent criteria, either correct the inconsistent flow rate problem, or obtain the Administrator's approval for the test results.

8.1.1.3.2 Perform traverses as specified in Section 8.0 of Method 2, but record only the Δp (velocity pressure) values for each sampling point. If a mass emission rate is desired, stack velocity pressures shall be recorded before and after each test, and an average stack velocity pressure determined for the testing period.

8.1.1.4 Verification of Absence of Cyclonic Flow. Check for cyclonic flow during the initial traverse to verify that it does not exist. Perform the cyclonic flow check as specified in Section 11.4 of Method 1 (40 CFR Part 60, Appendix A).

8.1.1.4.1 If cyclonic flow is present, verify that the absolute average angle of the tangential flow does not exceed 20 degrees. If the average value exceeds 20 degrees at the sampling location, the flow condition in the stack is unacceptable for testing.

8.1.1.4.2 Alternative procedures, subject to approval of the Administrator, *e.g.*, installing straightening vanes to eliminate the cyclonic flow, must be implemented prior to conducting the testing.

8.1.1.5 Stack Gas Moisture Measurements. *Not required*. Measuring the moisture content is optional when a mass emission rate is to be calculated.

8.1.1.5.1 The tester may elect to either measure the actual stack gas moisture during the sampling run or utilize a nominal moisture value of 2 percent.

8.1.1.5.2 For additional information on determining sampling train moisture, please refer to Method 4 (40 CFR Part 60, Appendix A).

8.1.1.6 Stack Temperature Measurements. If a mass emission rate is to be calculated, a temperature sensor must be placed either near the center of the stack, or attached to the pitot tube as described in Section 8.3 of Method 2. Stack temperature measurements, shall be recorded before and after each test, and an average stack temperature determined for the testing period.

8.1.1.7 Point Sampling Times. Since the sampling rate of the train (0.75 cfm) is maintained constant by the critical orifice, it is necessary to calculate specific sampling times for each traverse point in order to obtain a proportional sample.

8.1.1.7.1 If the sampling period (3 runs) is to be completed in a single day, the point sampling times shall be calculated only once.

8.1.1.7.2 If the sampling period is to occur over several days, the sampling times must be calculated daily using the initial velocity pressure data recorded for that day. Determine the average of the Δp values obtained during the velocity traverse (Figure 306A–2).

8.1.1.7.3 If the stack diameter is less than 12 inches, use 7.5 minutes in place of 5 minutes in the equation and 16 sampling points instead of 24 or 25 points. Calculate the sampling times for each traverse point using the following equation:

$$\text{Minutes at point n} = \frac{\sqrt{\Delta p \text{ at Point n}}}{\left(\sqrt{\Delta p}\right)_{avg}} \times 5 \text{ min.} \qquad \text{Eq. 306A-1}$$

Where:

n = Sampling point number.

Δp = Average pressure differential across pitot tube, mm H_2O (in. H_2O).

ΔP_{avg} = Average of Δp values, mm H_2O (in. H_2O).

NOTE: Convert the decimal fractions for minutes to seconds.

8.1.1.8 Pretest Preparation. It is recommended, but not required, that all items which will be in contact with the sample be cleaned prior to performing the testing to avoid possible sample contamination (positive chromium bias). These items include, but are not limited to: Sampling probe, connecting tubing, impingers, and jar containers.

8.1.1.8.1 Sample train components should be: (1) Rinsed with hot tap water; (2) washed with hot soapy water; (3) rinsed with tap water; (4) rinsed with reagent water; (5) soaked in a 10 percent (v/v) nitric acid solution for at least four hours; and (6) rinsed throughly with reagent water before use.

8.1.1.8.2 At a minimum, the tester should, rinse the probe, connecting tubing, and first and second impingers twice with either 0.1 N sodium hydroxide (NaOH) or 0.1 N sodium bicarbonate ($NaHCO_3$) and discard the rinse solution.

8.1.1.8.3 If separate sample shipping containers are to be used, these also should be precleaned using the specified cleaning procedures.

8.1.1.9 Preparation of Sampling Train. Assemble the sampling train as shown in Figure 306A–1. Secure the nozzle-liner assembly to the outer sheath to prevent movement when sampling.

8.1.1.9.1 Place 250 mL of 0.1 N NaOH or 0.1 N $NaHCO_3$ absorbing solution into the first jar container or impinger. The second jar/impinger is to remain empty. Place 6 to 16 mesh indicating silica gel, or equivalent desiccant into the third jar/impinger until the container is half full (~ 300 to 400 g).

8.1.1.9.2 Place a small cotton ball in the outlet exit tube of the third jar to collect small silica gel particles that may dislodge and impair the pump and/or gas meter.

8.1.1.10 Pretest Leak-Check. A pretest leak-check is recommended, but not required. If the tester opts to conduct the pretest leak-check, the following procedures shall be performed: (1) Place the jar/impinger containers into an ice bath and wait 10 minutes for the ice to cool the containers before performing the leak check and/or start sampling; (2) to perform the leak check, seal the nozzle using a piece of clear plastic wrap placed over the end of a finger and switch on the pump; and (3) the train system leak rate should not exceed 0.02 cfm at a vacuum of 380 mm Hg (15 in. Hg) or greater. If the leak rate

does exceed the 0.02 cfm requirement, identify and repair the leak area and perform the leak check again.

NOTE: Use caution when releasing the vacuum following the leak check. Always allow air to slowly flow through the nozzle end of the train system while the pump is still operating. Switching off the pump with vacuum on the system may result in the silica gel being pulled into the second jar container.

8.1.1.11 Leak-Checks During Sample Run. If, during the sampling run, a component (e.g., jar container) exchange becomes necessary, a leak-check shall be conducted *immediately before* the component exchange is made. The leak-check shall be performed according to the procedure outlined in Section 8.1.1.10 of this method. If the leakage rate is found to be ≤ 0.02 cfm at the maximum operating vacuum, the results are acceptable. If, however, a higher leak rate is obtained, either record the leakage rate and correct the sample volume as shown in Section 12.3 of Method 5 or void the sample and initiate a replacement run. Following the component change, leak-checks are optional, but are recommended as are the pretest leak-checks.

8.1.1.12 Post Test Leak Check. Remove the probe assembly and flexible tubing from the first jar/impinger container. Seal the inlet tube of the first container using clear plastic wrap and switch on the pump. The vacuum in the line between the pump and the critical orifice must be ≥15 in. Hg. Record the vacuum gauge measurement along with the leak rate observed on the train system.

8.1.1.12.1 If the leak rate does not exceed 0.02 cfm, the results are acceptable and no sample volume correction is necessary.

8.1.1.12.2 If, however, a higher leak rate is obtained (>0.02 cfm), the tester shall either record the leakage rate and correct the sample volume as shown in Section 12.3 of Method 5, or void the sampling run and initiate a replacement run. After completing the leak-check, slowly release the vacuum at the first container while the pump is still operating. Afterwards, switch-off the pump.

8.1.2 Sample Train Operation.

8.1.2.1 Data Recording. Record all pertinent process and sampling data on the data sheet (see Figure 306A–3). Ensure that the process operation is suitable for sample collection.

8.1.2.2 Starting the Test. Place the probe/nozzle into the duct at the first sampling point and switch on the pump. Start the sampling using the time interval calculated for the first point. When the first point sampling time has been completed, move to the second point and continue to sample for the time interval calculated for that point; sample each point on the traverse in this manner. Maintain ice around the sample containers during the run.

8.1.2.3 Critical Flow. The sample line between the critical orifice and the pump must operate at a vacuum of ≥ 380 mm Hg (≥15 in. Hg) in order for critical flow to be maintained. This vacuum must be monitored and documented using the vacuum gauge located between the critical orifice and the pump.

NOTE: Theoretically, critical flow for air occurs when the ratio of the orifice outlet absolute pressure to the orifice inlet absolute pressure is less than a factor of 0.53. This means that the system vacuum should be at least ≥ 356 mm Hg (≥ 14 in. Hg) at sea level and ~ 305 mm Hg (~ 12 in. Hg) at higher elevations.

8.1.2.4 Completion of Test.

8.1.2.4.1 Circular Stacks. Complete the first port traverse and switch off the pump. Testers may opt to perform a leak-check between the port changes to verify the leak rate however, this is not mandatory. Move the sampling train to the next sampling port and repeat the sequence. Be sure to record the final dry gas meter reading after completing the test run. After performing the post test leak check, disconnect the jar/impinger containers from the pump and meter assembly and transport the probe, connecting tubing, and containers to the sample recovery area.

8.1.2.4.2 Rectangle Stacks. Complete each port traverse as per the instructions provided in 8.1.2.4.1.

NOTE: If an approximate mass emission rate is to be calculated, measure and record the stack velocity pressure and temperature before and after the test run.

8.2 Sample Recovery. After the train has been transferred to the sample recovery area, disconnect the tubing that connects the jar/impingers. The tester shall select either the total Cr or Cr^{+6} sample recovery option. Samples to be analyzed for both total Cr and Cr^{+6} shall be recovered using the Cr^{+6} sample option (Section 8.2.2).

NOTE: Collect a reagent blank sample for each of the total Cr or the Cr^{+6} analytical options. If both analyses (Cr and Cr^{+6}) are to be conducted on the samples, collect separate reagent blanks for each analysis.

8.2.1 Total Cr Sample Option.

8.2.1.1 Shipping Container No. 1. The first jar container may either be used to store and transport the sample, or if GS impingers are used, samples may be stored and shipped in precleaned 250-mL, 500-mL or 1000-mL polyethylene or glass bottles with leak-free, nonmetal screw caps.

8.2.1.1.1 Unscrew the lid from the first jar/impinger container.

8.2.1.1.2 Lift the inner tube assembly almost out of the container, and using the wash bottle containing fresh absorbing solution, rinse the outside of the tube that was immersed in the container solution; rinse

the inside of the tube as well, by rinsing twice from the top of the tube down through the inner tube into the container.

8.2.1.2 Recover the contents of the second jar/impinger container by removing the lid and pouring any contents into the first shipping container.

8.2.1.2.1 Rinse twice, using fresh absorbing solution, the inner walls of the second container including the inside and outside of the inner tube.

8.2.1.2.2 Rinse the connecting tubing between the first and second sample containers with absorbing solution and place the rinses into the first container.

8.2.1.3 Position the nozzle, probe and connecting plastic tubing in a vertical position so that the tubing forms a ''U''.

8.2.1.3.1 Using the wash bottle, partially fill the tubing with fresh absorbing solution. Raise and lower the end of the plastic tubing several times to allow the solution to contact the internal surfaces. Do not allow the solution to overflow or part of the sample will be lost. Place the nozzle end of the probe over the mouth of the first container and elevate the plastic tubing so that the solution flows into the sample container.

8.2.1.3.2 Repeat the probe/tubing sample recovery procedure but allow the solution to flow out the opposite end of the plastic tubing into the sample container. Repeat the entire sample recovery procedure once again.

8.2.1.4 Use approximately 200 to 300 mL of the 0.1 N NaOH or 0.1 N $NaHCO_3$ absorbing solution during the rinsing of the probe nozzle, probe liner, sample containers, and connecting tubing.

8.2.1.5 Place a piece of clear plastic wrap over the mouth of the sample jar to seal the shipping container. Use a standard lid and band assembly to seal and secure the sample in the jar.

8.2.1.5.1 Label the jar clearly to identify its contents, sample number and date.

8.2.1.5.2 Mark the height of the liquid level on the container to identify any losses during shipping and handling.

8.2.1.5.3 Prepare a chain-of-custody sheet to accompany the sample to the laboratory.

8.2.2 Cr^{+6} Sample Option.

8.2.2.1 Shipping Container No. 1. The first jar container may either be used to store and transport the sample, or if GS impingers are used, samples may be stored and shipped in precleaned 250-mL, 500-mL or 1000-mL polyethylene or glass bottles with leak-free nonmetal screw caps.

8.2.2.1.1 Unscrew and remove the lid from the first jar container.

8.2.2.1.2 Measure and record the pH of the solution in the first container by using a pH indicator strip. The pH of the solution must be ≥8.5 for NaOH and ≥8.0 for $NaHCO_3$. If not, discard the collected sample, increase the concentration of the NaOH or NaHCO3 absorbing solution to 0.5 M and collect another air emission sample.

8.2.2.2 After measuring the pH of the first container, follow sample recovery procedures described in Sections 8.2.1.1 through 8.2.1.5.

NOTE: Since particulate matter is not usually present at chromium electroplating and/or chromium anodizing facilities, it is not necessary to filter the Cr^{+6} samples unless there is observed sediment in the collected solutions. If it is necessary to filter the Cr^{+6} solutions, please refer to the EPA Method 0061, Determination of Hexavalent Chromium Emissions from Stationary Sources, Section 7.4, Sample Preparation in SW–846 (see Reference 5) for procedure.

8.2.3 Silica Gel Container. Observe the color of the indicating silica gel to determine if it has been completely spent and make a notation of its condition/color on the field data sheet. Do not use water or other liquids to remove and transfer the silica gel.

8.2.4 Total Cr and/or Cr^{+6} Reagent Blank.

8.2.4.1 Shipping Container No. 2. Place approximately 500 mL of the 0.1 N NaOH or 0.1 N $NaHCO_3$ absorbing solution in a precleaned, labeled sample container and include with the field samples for analysis.

8.3 Sample Preservation, Storage, and Transport.

8.3.1 Total Cr Option. Samples that are to be analyzed for total Cr need not be refrigerated.

8.3.2 Cr^{+6} Option. Samples that are to be analyzed for Cr^{+6} must be shipped and stored at 4 °C (~40 °F).

NOTE: Allow Cr^{+6} samples to return to ambient temperature prior to analysis.

8.4 Sample Holding Times.

8.4.1 Total Cr Option. Samples that are to be analyzed for total chromium must be analyzed within 60 days of collection.

8.4.2 Cr^{+6} Option. Samples that are to be analyzed for Cr^{+6} must be analyzed within 14 days of collection.

9.0 Quality Control

9.1 Same as Method 306, Section 9.0.

10.0 Calibration and Standardization

NOTE: Tester shall maintain a performance log of all calibration results.

10.1 Pitot Tube. The Type S pitot tube assembly shall be calibrated according to the procedures outlined in Section 10.1 of Method 2.

10.2 Temperature Sensor. Use the procedure in Section 10.3 of Method 2 to calibrate the in-stack temperature sensor.

10.3 Metering System.

10.3.1 Sample Train Dry Gas Meter Calibration. Calibrations may be performed as described in Section 16.2 of Method 5 by either the manufacturer, a firm who provides calibration services, or the tester.

10.3.2 Dry Gas Meter Calibration Coefficient (Y_m). The meter calibration coefficient (Y_m) must be determined prior to the initial use of the meter, and following each field test program. If the dry gas meter is new, the manufacturer will have specified the Y_m value for the meter. This Y_m value can be used as the pretest value for the first test. For subsequent tests, the tester must use the Y_m value established during the pretest calibration.

10.3.3 Calibration Orifice. The manufacturer may have included a calibration orifice and a summary spreadsheet with the meter that may be used for calibration purposes. The spreadsheet will provide data necessary to determine the calibration for the orifice and meter (standard cubic feet volume, sample time, *etc.*). These data were produced when the initial Y_m value was determined for the meter.

10.3.4 Y_m Meter Value Verification or Meter Calibration.

10.3.4.1 The Y_m meter value may be determined by replacing the sampling train critical orifice with the calibration orifice. Replace the critical orifice assembly by installing the calibration orifice in the same location. The inlet side of the calibration orifice is to be left open to the atmosphere and is *not* to be reconnected to the sample train during the calibration procedure.

10.3.4.2 If the vacuum pump is cold, switch on the pump and allow it to operate (become warm) for several minutes prior to starting the calibration. After stopping the pump, record the initial dry gas meter volume and meter temperature.

10.3.4.3 Perform the calibration for the number of minutes specified by the manufacturer's data sheet (usually 5 minutes). Stop the pump and record the final dry gas meter volume and temperature. Subtract the start volume from the stop volume to obtain the V_m and average the meter temperatures (t_m).

10.3.5 Y_m Value Calculation. Y_m is the calculated value for the dry gas meter. Calculate Y_m using the following equation:

$$Y_m = \frac{V_{m(std),mfg}}{V_m\left(\frac{T_{std}}{P_{std}}\right)\left(\frac{P_{bar}}{T_m}\right)}$$

$$Y_m = \frac{V_{m(std),mfg}\,T_m}{17.64\,V_m\,P_{bar}} \qquad \text{Eq. 306A-2}$$

Where:

P_{bar} = Barometric pressure at meter, mm Hg, (in. Hg).
P_{std} = Standard absolute pressure,
Metric = 760 mm Hg.
English = 29.92 in. Hg.
t_m = Average dry gas meter temperature, °C, (°F).
T_m = Absolute average dry gas meter temperature,
Metric °K = 273 + tm (°C).
English °R = 460 + t_m(°F).
T_{std} = Standard absolute temperature,
Metric = 293 °K.
English = 528 °R.
V_m = Volume of gas sample as measured (actual) by dry gas meter, dcm,(dcf).
$V_{m(std),mfg}$ = Volume of gas sample measured by manufacture's calibrated orifice and dry gas meter, corrected to standard conditions (pressure/temperature) dscm (dscf).
Y_m = Dry gas meter calibration factor, (dimensionless).

10.3.6 Y_m Comparison. Compare the Y_m value provided by the manufacturer (Section 10.3.3) or the pretest Y_m value to the post test Y_m value using the following equation:

$$\frac{Y_m(\text{manufacturer's or pretest value})}{Y_m(\text{post-test value})} \qquad \text{Eq. 306A-3}$$

10.3.6.1 If this ratio is between 0.95 and 1.05, the designated Y_m value for the meter is acceptable for use in later calculations.

10.3.6.1.1 If the value is outside the specified range, the test series shall either be: 1) voided and the samples discarded; or 2) calculations for the test series shall be conducted using whichever meter coefficient value (i.e., manufacturers's/pretest Y_m value or post test Y_m value) produces the lowest sample volume.

10.3.6.1.2 If the post test dry gas meter Y_m value differs by more than 5% as compared to the pretest value, either perform the calibration again to determine acceptability or return the meter to the manufacturer for recalibration.

10.3.6.1.3 The calibration may also be conducted as specified in Section 10.3 or Section 16.0 of Method 5 (40 CFR Part 60, Appendix A), except that it is only necessary to check the calibration at one flow rate of ~ 0.75 cfm.

10.3.6.1.4 The calibration of the dry gas meter must be verified after each field test program using the same procedures.

NOTE: The tester may elect to use the Y_m post test value for the next pretest Y_m value; e.g., Test 1 post test Y_m value and Test 2 pretest Y_m value would be the same.

10.4 Barometer. Calibrate against a mercury barometer that has been corrected for temperature and elevation.

10.5 ICP Spectrometer Calibration. Same as Method 306, Section 10.2.

10.6 GFAA Spectrometer Calibration. Same as Method 306, Section 10.3.

10.7 IC/PCR Calibration. Same as Method 306, Section 10.4.

11.0 Analytical Procedures

NOTE: The method determines the chromium concentration in µg Cr/mL. It is important that the analyst measure the volume of the field sample prior to analyzing the sample. This will allow for conversion of µg Cr/mL to µg Cr/sample.

11.1 Analysis. Refer to Method 306 for sample preparation and analysis procedures.

12.0 Data Analysis and Calculations

12.1 Calculations. Perform the calculations, retaining one extra decimal point beyond that of the acquired data. When reporting final results, round number of figures consistent with the original data.

12.2 Nomenclature.

A = Cross-sectional area of stack, m_2 (ft_2).

B_{ws} = Water vapor in gas stream, proportion by volume, dimensionless (assume 2 percent moisture = 0.02).

C_p = Pitot tube coefficient; ''S'' type pitot coefficient usually 0.840, dimensionless.

C_S = Concentration of Cr in sample solution, µg Cr/mL.

C_{Cr} = Concentration of Cr in stack gas, dry basis, corrected to standard conditions µg/dscm (gr/dscf).

d = Diameter of stack, m (ft).

D = Digestion factor, dimensionless.

ER = Approximate mass emission rate, mg/hr (lb/hr).

F = Dilution factor, dimensionless.

L = Length of a square or rectangular duct, m (ft).

M_{Cr} = Total Cr in each sample, µg (gr).

M_s = Molecular weight of wet stack gas, wet basis, g/g-mole, (lb/lb-mole); in a nominal gas stream at 2% moisture the value is 28.62.

P_{bar} = Barometric pressure at sampling site, mm Hg (in. Hg).

P_s = Absolute stack gas pressure; in this case, usually the same value as the barometric pressure, mm Hg (in. Hg).

P_{std} = Standard absolute pressure:
Metric = 760 mm Hg.
English = 29.92 in. Hg.

Q_{std} = Average stack gas volumetric flow, dry, corrected to standard conditions, dscm/hr (dscf/hr).

t_m = Average dry gas meter temperature, °C (°F).

T_m = Absolute average dry gas meter temperature:
Metric °K = 273 + t_m (°C).
English °R = 460 + t_m(°F).

t_s = Average stack temperature, °C (°F).

T_s = Absolute average stack gas temperature: Metric °K = 273 + t_s (°C). English °R = 460 + t_s(°F).

T_{std} = Standard absolute temperature: Metric = 293 °K. English = 528 °R.

V_{ad} = Volume of sample aliquot after digestion (mL).

V_{af} = Volume of sample aliquot after dilution (mL).

V_{bd} = Volume of sample aliquot submitted to digestion (mL).

V_{bf} = Volume of sample aliquot before dilution (mL).

V_m = Volume of gas sample as measured (actual, dry) by dry gas meter, dcm (dcf).

V_{mL} = Volume of impinger contents plus rinses (mL).

$V_{m(std)}$ = Volume of gas sample measured by the dry gas meter, corrected to standard conditions (temperature/pressure), dscm (dscf).

v_s = Stack gas average velocity, calculated by Method 2, Equation 2–9, m/sec (ft/sec).

W = Width of a square or rectangular duct, m (ft).

Y_m = Dry gas meter calibration factor, (dimensionless).

Δp = Velocity head measured by the Type S pitot tube, cm H_2O (in. H_2O).

Δp_{avg} = Average of Δp values, mm H_2O (in. H_2O).

12.3 Dilution Factor. The dilution factor is the ratio of the volume of sample aliquot after dilution to the volume before dilution.

The dilution factor is usually calculated by the laboratory. This ratio is derived by the following equation:

$$F = \frac{V_{af}}{V_{bf}} \qquad \text{Eq. 306A-4}$$

12.4 Digestion Factor. The digestion factor is the ratio of the volume of sample aliquot after digestion to the volume before digestion. The digestion factor is usually calculated by the laboratory. This ratio is derived by the following equation.

$$D = \frac{V_{ad}}{V_{bd}} \qquad \text{Eq. 306A-5}$$

12.5 Total Cr in Sample. Calculate M_{Cr}, the total µg Cr in each sample, using the following equation:

$$M_{Cr} = V_{mL} \times C_S \times F \times D \qquad \text{Eq. 306A-6}$$

12.6 Dry Gas Volume. Correct the sample volume measured by the dry gas meter to standard conditions (20 °C, 760 mm Hg or 68'F, 29.92 in. Hg) using the following equation:

$$V_{m(std)} = V_m Y_m \left(\frac{T_{std}}{T_m}\right)\left(\frac{P_{bar}}{P_{std}}\right) = K_1 V_m Y_m \left(\frac{P_{bar}}{T_m}\right) \qquad \text{Eq. 306A-7}$$

Where:

K_1 = Metric units—0.3855 °K/mm Hg.
English units—17.64 °R/in. Hg.

12.7 Cr Emission Concentration (C_{Cr}). Calculate C_{Cr}, the Cr concentration in the stack gas, in µg/dscm (µg/dscf) on a dry basis, corrected to standard conditions, using the following equation:

$$C_{Cr} = \frac{M_{Cr}}{V_{m(std)}} \qquad \text{Eq. 306A-8}$$

Note: To convert µg/dscm (µg/dscf) to mg/dscm (mg/dscf), divide by 1000.

12.8 Stack Gas Velocity.

12.8.1 K_p = Velocity equation constant:

$$\text{Metric } K_p = 34.97 \frac{m}{sec}\left[\frac{(g/g\text{-mole})(mm\ Hg)}{(^\circ K)(mm\ H_2O)}\right]^{1/2}$$

$$\text{English } K_p = 85.49 \frac{ft}{sec}\left[\frac{(lb/lb\text{-mole})(in.\ Hg)}{(^\circ R)(in.\ H_2O)}\right]^{1/2}$$

12.8.2 Average Stack Gas Velocity.

$$v_s = K_p C_p \left(\sqrt{\Delta p}\right)_{avg} \sqrt{\frac{T_{s(avg)}}{P_s M_s}}$$

$$= 34.97\ C_p \left(\sqrt{\Delta p}\right)_{avg} \sqrt{\frac{T_{s(avg)}}{P_s M_s}} \qquad \text{Eq. 306A-9}$$

12.9 Cross sectional area of stack.

$$A = \frac{\Pi d^2}{4} \text{ or } A = LW \qquad \text{Eq. 306A-10}$$

12.10 Average Stack Gas Dry Volumetric Flow Rate.

NOTE: The emission rate may be based on a nominal stack moisture content of 2 percent (0.02). To calculate an emission rate, the tester may elect to use either the nominal stack gas moisture value or the actual stack gas moisture collected during the sampling run.

Volumetric Flow Rate Equation:

$$Q_{std} = 3600\left(1 - B_{ws}\right) v_s A \left(\frac{T_{std}}{T_{s(avg)}}\right)\left(\frac{P_s}{P_{std}}\right) \qquad \text{Eq. 306A-11}$$

Where:
3600 = Conversion factor, sec/hr.

$$Q_{std} = 62{,}234\ v_s A \left(\frac{P_s}{T_{s(avg)}}\right) \qquad \text{Eq. 306A-12}$$

NOTE: To convert Q_{std} from dscm/hr (dscf/hr) to dscm/min (dscf/min), divide Q_{std} by 60.

12.11 Mass emission rate, mg/hr (lb/hr):

$$ER = C_{cr} \times Q_{std} \times 10^{-3} \left(mg / hr\right) \qquad \text{Eq. 306A-13}$$

$$ER = C_{cr} \times Q_{std} \times 1.43 \times 10^{-4} \left(lb / hr\right) \qquad \text{Eq. 306A-14}$$

13.0 Method Performance

13.1 Range. The recommended working range for all of the three analytical techniques starts at five times the analytical detection limit (see also Method 306, Section 13.2.2). The upper limit of all three techniques can be extended indefinitely by appropriate dilution.

13.2 Sensitivity.

13.2.1 Analytical Sensitivity. The estimated instrumental detection limits listed are provided as a guide for an instrumental limit. The actual method detection limits are sample and instrument dependent and may vary as the sample matrix varies.

13.2.1.1 ICP Analytical Sensitivity. The minimum estimated detection limits for ICP, as reported in Method 6010A and the recently revised Method 6010B of SW–846 (Reference 1), are 7.0 µg Cr/L and 4.7 µg Cr/L, respectively.

13.2.1.2 GFAAS Analytical Sensitivity. The minimum estimated detection limit for GFAAS, as reported in Methods 7000A and 7191 of SW–846 (Reference 1), is 1.0 µg Cr/L.

13.2.1.3 IC/PCR Analytical Sensitivity. The minimum detection limit for IC/PCR with a preconcentrator, as reported in Methods 0061 and 7199 of SW–846 (Reference 1), is 0.05 µg Cr^{+6}/L.

13.2.2 In-stack Sensitivity. The in-stack sensitivity depends upon the analytical detection limit, the volume of stack gas sampled, and the total volume of the impinger absorbing solution plus the rinses. Using the analytical detection limits given in Sections 13.2.1.1, 13.2.1.2, and 13.2.1.3; a stack gas sample volume of 1.7 dscm; and a total liquid sample volume of 500 mL; the corresponding in-stack detection limits are 0.0014 mg Cr/dscm to 0.0021 mg Cr/dscm for ICP, 0.00029 mg Cr/dscm for GFAAS, and 0.000015 mg Cr^{+36}/dscm for IC/PCR with preconcentration.

NOTE: It is recommended that the concentration of Cr in the analytical solutions be at least five times the analytical detection limit to optimize sensitivity in the analyses. Using this guideline and the same assumptions for impinger sample volume and stack gas sample volume (500 mL and 1.7 dscm, respectively), the recommended minimum stack concentrations for optimum sensitivity are 0.0068 mg Cr/dscm to 0.0103 mg Cr/dscm for ICP, 0.0015 mg Cr/dscm for GFAAS, and 0.000074 mg Cr^{+6} dscm for IC/PCR with preconcentration. If required, the in-stack detection limits can be improved by either increasing the sampling time, the stack gas sample volume, reducing the volume of the digested sample for GFAAS, improving the analytical detection limits, or any combination of the three.

13.3 Precision.

13.3.1 The following precision data have been reported for the three analytical methods. In each case, when the sampling precision is combined with the reported analytical precision, the resulting overall precision may decrease.

13.3.2 Bias data is also reported for GFAAS.

13.4 ICP Precision.

13.4.1 As reported in Method 6010B of SW–846 (Reference 1), in an EPA round-robin Phase 1 study, seven laboratories applied the ICP technique to acid/distilled water matrices that had been spiked with various metal concentrates. For true values of 10, 50, and 150 µg Cr/L; the mean reported values were 10, 50, and 149 µg Cr/L; and the mean percent relative standard deviations were 18, 3.3, and 3.8 percent, respectively.

13.4.2 In another multilaboratory study cited in Method 6010B, a mean relative standard of 8.2 percent was reported for an aqueous sample concentration of approximately 3750 µg Cr/L.

13.5 GFAAS Precision. As reported in Method 7191 of SW–846 (Reference 1), in a single laboratory (EMSL), using Cincinnati, Ohio tap water spiked at concentrations of 19, 48, and 77 µg Cr/L, the standard deviations were ±0.1, ±0.2, and ±0.8, respectively. Recoveries at these levels were 97 percent, 101 percent, and 102 percent, respectively.

13.6 IC/PCR Precision. As reported in Methods 0061 and 7199 of SW–846 (Reference 1), the precision of IC/PCR with sample preconcentration is 5 to 10 percent; the overall precision for sewage sludge incinerators emitting 120 ng/dscm of Cr^{+6} and 3.5 µg/dscm of total Cr is 25 percent and 9 percent, respectively; and for hazardous waste incinerators emitting 300 ng/dscm of Cr^{+6} the precision is 20 percent.

14.0 Pollution Prevention

14.1 The only materials used in this method that could be considered pollutants are the chromium standards used for instrument calibration and acids used in the cleaning of the collection and measurement containers/labware, in the preparation of standards, and in the acid digestion of samples. Both reagents can be stored in the same waste container.

14.2 Cleaning solutions containing acids should be prepared in volumes consistent

with use to minimize the disposal of excessive volumes of acid.

14.3 To the extent possible, the containers/vessels used to collect and prepare samples should be cleaned and reused to minimize the generation of solid waste.

15.0 Waste Management

15.1 It is the responsibility of the laboratory and the sampling team to comply with all federal, state, and local regulations governing waste management, particularly the discharge regulations, hazardous waste identification rules, and land disposal restrictions; and to protect the air, water, and land by minimizing and controlling all releases from field operations.

15.2 For further information on waste management, consult The Waste Management Manual for Laboratory Personnel and Less is Better-Laboratory Chemical Management for Waste Reduction, available from the American Chemical Society's Department of Government Relations and Science Policy, 1155 16th Street NW, Washington, DC 20036.

16.0 References

1. F.R. Clay, Memo, Impinger Collection Efficiency—Mason Jars vs. Greenburg-Smith Impingers, Dec. 1989.

2. Segall, R.R., W.G. DeWees, F.R. Clay, and J.W. Brown. Development of Screening Methods for Use in Chromium Emissions Measurement and Regulations Enforcement. In: Proceedings of the 1989 EPA/A&WMA International Symposium-Measurement of Toxic and Related Air Pollutants, A&WMA Publication VIP–13, EPA Report No. 600/9–89–060, p. 785.

3. Clay, F.R., Chromium Sampling Method. In: Proceedings of the 1990 EPA/A&WMA International Symposium-Measurement of Toxic and Related Air Pollutants, A&WMA Publication VIP–17, EPA Report No. 600/9–90–026, p. 576.

4. Clay, F.R., Proposed Sampling Method 306A for the Determination of Hexavalent Chromium Emissions from Electroplating and Anodizing Facilities. In: Proceedings of the 1992 EPA/A&WMA International Symposium-Measurement of Toxic and Related Air Pollutants, A&WMA Publication VIP–25, EPA Report No. 600/R–92/131, p. 209.

5. Test Methods for Evaluating Solid Waste, Physical/Chemical Methods, SW–846, Third Edition as amended by Updates I, II, IIA, IIB, and III. Document No. 955–001–000001. Available from Superintendent of Documents, U.S. Government Printing Office, Washington, DC, November 1986.

17.0 Tables, Diagrams, Flowcharts, and Validation Data

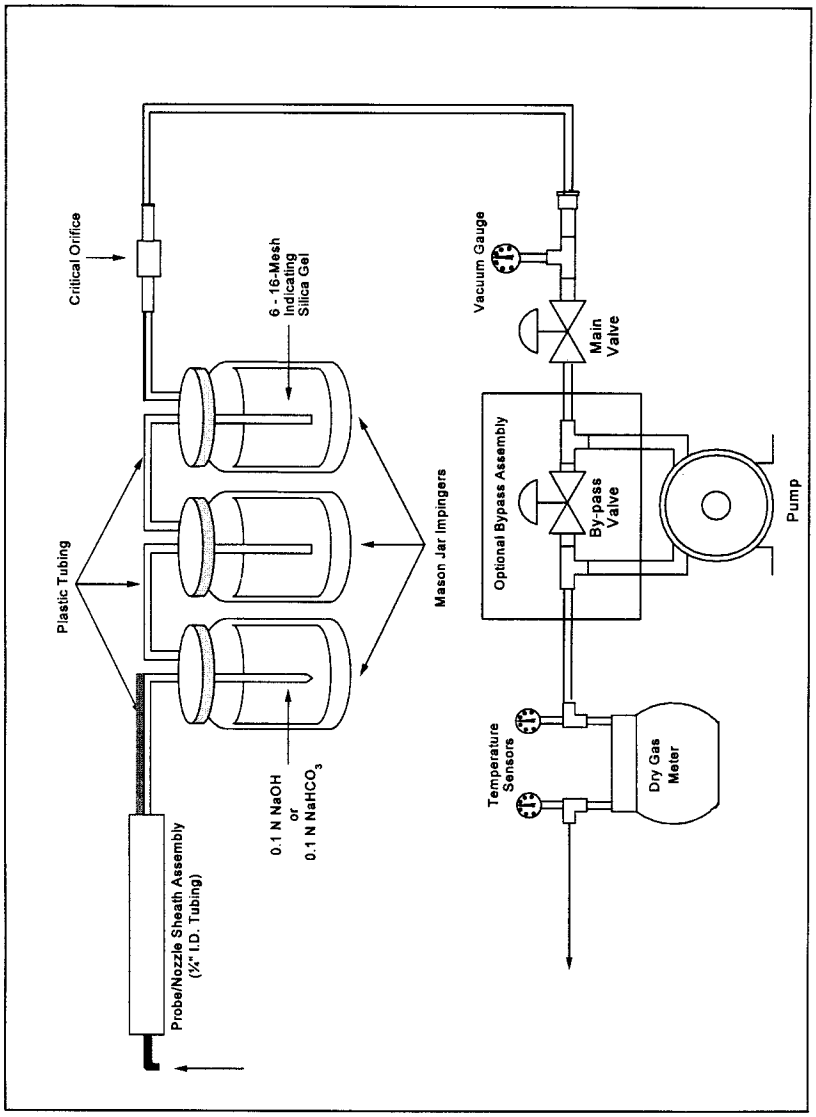

Figure 306A-1. Method 306A Sampling Train.

Plant _____

Date _____ Time _____

Location _____

Operator(s) _____

Begining stack temperature, °F _____

Ending stack temperature, °F _____

Average stack temperature, °F _____

Schematic of Points

Circle one:

Before Run 1 Before Run 2 Before Run 3 After Run No. ___

Traverse Point Number	Cyclonic Flow Angle (Degrees)	Δp	$\sqrt{\Delta p}$	$\frac{\sqrt{\Delta p}}{\sqrt{\Delta p_{Avg}}}$ x 5 min = Numerical Minutes	Decimal Part of Minute x 60 = Seconds	Whole Minutes + Seconds = Sample Time

Plant _____
Sampling Site _____
Total Cr catch, M, μg _____
Avg dry gas meter temp, T_m, °F _____
Meter correction factor, Y_m _____
Meter volume, V_m, ft^3 _____
Barometric press, P_{bar}, in. Hg _____
Start clock time _____
Stop clock time _____

Date _____ Run Number _____
Operator _____
Stack radius, r, in. _____
Avg delta p, Δ p in., H_2O _____
Stack temp, T_s, °F _____
Leak rate before run, cfm _____
Leak rate after run, cfm _____
Stop meter volume, ft^3 _____
Start meter volume, ft^3 _____

POINT NO	SAMPLE (MIN/SEC)	GAS METER TEMP (F)		CRITICAL ORIFICE VACUUM IN. HG
	TOTAL			
		AVG		

POINT NO	SAMPLE (MIN/SEC)	GAS METER TEMP (F)		CRITICAL ORIFICE VACUUM IN. HG
	TOTAL			
		AVG		

REMARKS _____

Figure 306A-3. Chromium Constant Sampling Rate Field Data Sheet.

METHOD 306B—SURFACE TENSION MEASUREMENT FOR TANKS USED AT DECORATIVE CHROMIUM ELECTROPLATING AND CHROMIUM ANODIZING FACILITIES

NOTE: This method does not include all of the specifications (*e.g.*, equipment and supplies) and procedures (*e.g.*, sampling and analytical) essential to its performance. Some material is incorporated by reference from other methods in 40 CFR Part 60, Appendix A and in this part. Therefore, to obtain reliable results, persons using this method should have a thorough knowledge of at least Methods 5 and 306.

1.0 Scope and Application

1.1 Analyte. Not applicable.

1.2 Applicability. This method is applicable to all decorative chromium plating and chromium anodizing operations, and continuous chromium plating at iron and steel facilities where a wetting agent is used in the tank as the primary mechanism for reducing emissions from the surface of the plating solution.

2.0 Summary of Method

2.1 During an electroplating or anodizing operation, gas bubbles generated during the process rise to the surface of the liquid and burst. Upon bursting, tiny droplets of chromic acid become entrained in ambient air. The addition of a wetting agent to the tank bath reduces the surface tension of the liquid and diminishes the formation of these droplets.

2.2 This method determines the surface tension of the bath using a stalagmometer or a tensiometer to confirm that there is sufficient wetting agent present.

3.0 Definitions. [Reserved]

4.0 Interferences. [Reserved]

5.0 Safety

5.1 Disclaimer. This method may involve hazardous materials, operations, and equipment. This test method may not address all of the safety problems associated with its use. It is the responsibility of the user to establish appropriate safety and health practices and to determine the applicability of regulatory limitations prior to performing this test method.

6.0 Equipment and Supplies

6.1 Stalagmometer. Any commercially available stalagmometer or equivalent surface tension measuring device may be used to measure the surface tension of the plating or anodizing tank liquid.

6.2 Tensiometer. A tensiometer may be used to measure the surface tension of the tank liquid provided the procedures specified in ASTM Method D 1331–89, Standard Test Methods for Surface and Interfacial Tension of Solutions of Surface Active Agents (incorporated by reference—see §63.14) are followed.

7.0 Reagents and Standards. [Reserved]

8.0 Sample Collection, Sample Recovery, Sample Preservation, Sample Holding Times, Storage, and Transport. [Reserved]

9.0 Quality Control. [Reserved]

10.0 Calibration and Standardization. [Reserved]

11.0 Analytical Procedure

11.1 Procedure. The surface tension of the tank bath may be measured by using a tensiometer, a stalagmometer or any other equivalent surface tension measuring device approved by the Administrator for measuring surface tension in dynes per centimeter. If the tensiometer is used, the procedures specified in ASTM Method D 1331–89 must be followed. If a stalagmometer or other device is used to measure surface tension, the instructions provided with the measuring device must be followed.

11.2 Frequency of Measurements.

11.2.1 Measurements of the bath surface tension are performed using a progressive system which decreases the frequency of surface tension measurements required when the proper surface tension is maintained.

11.2.1.1 Initially, following the compliance date, surface tension measurements must be conducted once every 4 hours of tank operation for the first 40 hours of tank operation.

11.2.1.2 Once there are no exceedances during a period of 40 hours of tank operation, measurements may be conducted once every 8 hours of tank operation.

11.2.1.3 Once there are no exceedances during a second period of 40 consecutive hours of tank operation, measurements may be conducted once every 40 hours of tank operation on an on-going basis, until an exceedance occurs. The maximum time interval for measurements is once every 40 hours of tank operation.

11.2.2 If a measurement of the surface tension of the solution is above the 45 dynes per centimeter limit, or above an alternate surface tension limit established during the performance test, the time interval shall revert back to the original monitoring schedule of once every 4 hours. A subsequent decrease in frequency would then be allowed according to Section 11.2.1.

12.0 Data Analysis and Calculations

12.1 Log Book of Surface Tension Measurements and Fume Suppressant Additions.

12.1.1 The surface tension of the plating or anodizing tank bath must be measured as specified in Section 11.2.

12.1.2 The measurements must be recorded in the log book. In addition to the record of surface tension measurements, the frequency of fume suppressant maintenance additions and the amount of fume suppressant added during each maintenance addition must be recorded in the log book.

12.1.3 The log book will be readily available for inspection by regulatory personnel.

12.2 Instructions for Apparatus Used in Measuring Surface Tension.

12.2.1 Included with the log book must be a copy of the instructions for the apparatus used for measuring the surface tension of the plating or anodizing bath.

12.2.2 If a tensiometer is used, a copy of ASTM Method D 1331–89 must be included with the log book.

13.0 Method Performance. [Reserved]

14.0 Pollution Prevention. [Reserved]

15.0 Waste Management. [Reserved]

16.0 References. [Reserved]

17.0 Tables, Diagrams, Flowcharts, and Validation Data. [Reserved]

METHOD 307—DETERMINATION OF EMISSIONS FROM HALOGENATED SOLVENT VAPOR CLEANING MACHINES USING A LIQUID LEVEL PROCEDURE

1. Applicability and Principle

1.1 Applicability. This method is applicable to the determination of the halogenated solvent emissions from solvent vapor cleaners in the idling mode.

1.2 Principle. The solvent level in the solvent cleaning machine is measured using inclined liquid level indicators. The change in liquid level corresponds directly to the amount of solvent lost from the solvent cleaning machine.

2. Apparatus

NOTE: Mention of trade names or specific products does not constitute endorsement by the Environmental Protection Agency.

2.1 Inclined Liquid Level Indicator. A schematic of the inclined liquid level indicators used in this method is shown in figure 307–1; two inclined liquid level indicators having 0.05 centimeters divisions or smaller shall be used. The liquid level indicators shall be made of glass, Teflon, or any similar material that will not react with the solvent being used. A 6-inch by 1-inch slope is recommended; however the slope may vary depending on the size and design of the solvent cleaning machine.

NOTE: It is important that the inclined liquid level indicators be constructed with ease of reading in mind. The inclined liquid level indicators should also be mounted so that they can be raised or lowered if necessary to suit the solvent cleaning machine size.

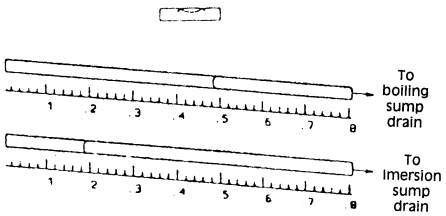

Figure 307-1. Inclined Liquid Level Indicator Apparatus.

2.2 Horizontal Indicator. Device to check the inclined liquid level indicators orientation relative to horizontal.

2.3 Velocity Meter. Hotwire and vane anemometers, or other devices capable of measuring the flow rates ranging from 0 to 15.2 meters per minute across the solvent cleaning machine.

3. Procedure

3.1 Connection of the Inclined Liquid Level Indicator. Connect one of the inclined liquid level indicators to the boiling sump drain and the other inclined liquid level indicator to the immersion sump drain using Teflon tubing and the appropriate fittings. A schematic diagram is shown in figure 307–2.

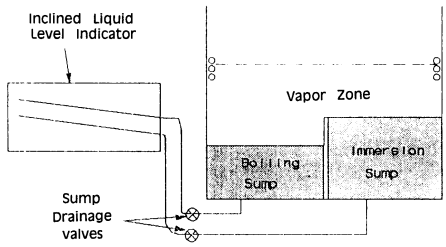

Figure 307-2. Solvent Cleaner Test Setup.

3.2 Positioning of Velocity Meter. Position the velocity meter so that it measures the flow rate of the air passing directly across the solvent cleaning machine.

3.3 Level the Inclined Liquid Level Indicators.

3.4 Initial Inclined Liquid Level Indicator Readings. Open the sump drainage valves. Allow the solvent cleaning machine to operate long enough for the vapor zone to form and the system to stabilize (check with manufacturer). Record the inclined liquid level indicators readings and the starting time on the data sheet. A sample data sheet is provided in figure 307–3.

Date _____

Run _____

Solvent type _____

Solvent density, g/m^3 (lb/ft^3) _____

Length of boiling sump (S_B), m (ft) _____

Width of boiling sump (W_B), m (ft) _____

Length of immersion sump (S_I), m (ft) _____

Width of immersion sump (W_I), m (ft) _____

Length of solvent vapor/air interface (S_V), m (ft) _____

Width of solvent vapor/air interface (W_V), m (ft) _____

Clock time	Boiling sump reading	Immersion sump reading	Flow rate reading

Figure 307–3. Data sheet.

3.5 Final Inclined Liquid Level Indicator Readings. At the end of the 16-hour test run, check to make sure the inclined liquid level indicators are level; if not, make the necessary adjustments. Record the final inclined liquid level indicators readings and time.

3.6 Determination of Solvent Vapor/Air Interface Area for Each Sump. Determine the area of the solvent/air interface of the individual sumps. Whenever possible, physically measure these dimensions, rather than using factory specifications. A schematic of the dimensions of a solvent cleaning machine is provided in figure 307–4.

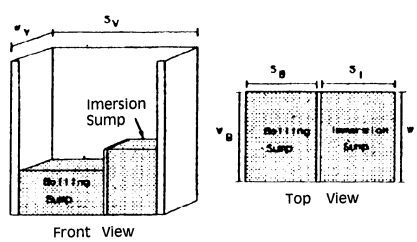

Figure 307-4. Solvent Cleaner Dimensions.

4. Calculations

4.1 Nomenclature.

A_B = area of boiling sump interface, m^2 (ft^2).

A_I = area of immersion sump interface, m^2 (ft^2).

A_V = area of solvent/air interface, m^2 (ft^2).
E = emission rate, kg/m^2-hr (lb/ft^2-hr).
K = 100,000 cm . g/m . kg for metric units.
= 12 in./ft for English units.
L_{BF} = final boiling sump inclined liquid level indicators reading, cm (in.).
L_{Bi} = initial boiling sump inclined liquid level indicators reading, cm (in.).
L_{If} = final immersion sump inclined liquid level indicators reading, cm (in.).
L_{Ii} = initial immersion sump inclined liquid level indicators reading, cm (in.).
S_B = length of the boiling sump, m (ft).
S_I = length of the immersion sump, m (ft).
S_V = length of the solvent vapor/air interface, m (ft).
W_B = width of the boiling sump, m (ft).
W_I = width of the immersion sump, m (ft).
W_V = width of the solvent vapor/air interface, m (ft).
ρ = density of solvent, g/m3 (lb/ft3).
θ = test time, hr.

4.2 Area of Sump Interfaces. Calculate the areas of the boiling and immersion sump interfaces as follows:

$A_B = S_B W_B$ Eq. 307–1
$A_I = S_I W_I$ Eq. 307–2

4.3 Area of Solvent/Air Interface. Calculate the area of the solvent vapor/air interface as follows:

$A_V = S_V W_V$ Eq. 307–3

4.4 Emission Rate. Calculate the emission rate as follows:

$$E = \frac{\left(L_{B_f} - L_{B_i}\right)\rho A_B + \left(L_{I_f} - L_{I_i}\right)\rho A_I}{K A_V \theta}$$

Eq. 307-4

METHOD 308—PROCEDURE FOR DETERMINATION OF METHANOL EMISSION FROM STATIONARY SOURCES

1.0 Scope and Application

1.1 Analyte. Methanol. Chemical Abstract Service (CAS) No. 67–56–1.

1.2 Applicability. This method applies to the measurement of methanol emissions from specified stationary sources.

2.0 Summary of Method

A gas sample is extracted from the sampling point in the stack. The methanol is collected in deionized distilled water and adsorbed on silica gel. The sample is returned to the laboratory where the methanol in the water fraction is separated from other organic compounds with a gas chromatograph (GC) and is then measured by a flame ionization detector (FID). The fraction adsorbed on silica gel is extracted with an aqueous solution of n-propanol and is then separated and measured by GC/FID.

3.0 Definitions. [Reserved]

4.0 Interferences. [Reserved]

5.0 Safety

5.1 Disclaimer. This method may involve hazardous materials, operations, and equipment. This test method does not purport to address all of the safety problems associated with its use. It is the responsibility of the user of this test method to establish appropriate safety and health practices and to determine the applicability of regulatory limitations before performing this test method.

5.2 Methanol Characteristics. Methanol is flammable and a dangerous fire and explosion risk. It is moderately toxic by ingestion and inhalation.

6.0 Equipment and Supplies

6.1 Sample Collection. The following items are required for sample collection:

6.1.1 Sampling Train. The sampling train is shown in Figure 308–1 and component parts are discussed below.

6.1.1.1 Probe. Teflon®, approximately 6-millimeter (mm) (0.24 inch) outside diameter.

6.1.1.2 Impinger. A 30-milliliter (ml) midget impinger. The impinger must be connected with leak-free glass connectors. Silicone grease may not be used to lubricate the connectors.

6.1.1.3 Adsorbent Tube. Glass tubes packed with the required amount of the specified adsorbent.

6.1.1.4 Valve. Needle valve, to regulate sample gas flow rate.

6.1.1.5 Pump. Leak-free diaphragm pump, or equivalent, to pull gas through the sampling train. Install a small surge tank between the pump and rate meter to eliminate the pulsation effect of the diaphragm pump on the rotameter.

6.1.1.6 Rate Meter. Rotameter, or equivalent, capable of measuring flow rate to within 2 percent of the selected flow rate of up to 1000 milliliter per minute (ml/min). Alternatively, the tester may use a critical orifice to set the flow rate.

6.1.1.7 Volume Meter. Dry gas meter (DGM), sufficiently accurate to measure the sample volume to within 2 percent, calibrated at the selected flow rate and conditions actually encountered during sampling, and equipped with a temperature sensor (dial thermometer, or equivalent) capable of measuring temperature accurately to within 3 °C (5.4 °F).

6.1.1.8 Barometer. Mercury (Hg), aneroid, or other barometer capable of measuring atmospheric pressure to within 2.5 mm (0.1 inch) Hg. See the NOTE in Method 5 (40 CFR part 60, appendix A), section 6.1.2.

6.1.1.9 Vacuum Gauge and Rotameter. At least 760-mm (30-inch) Hg gauge and 0- to 40-

ml/min rotameter, to be used for leak-check of the sampling train.

6.2 Sample Recovery. The following items are required for sample recovery:

6.2.1 Wash Bottles. Polyethylene or glass, 500-ml, two.

6.2.2 Sample Vials. Glass, 40-ml, with Teflon®-lined septa, to store impinger samples (one per sample).

6.2.3 Graduated Cylinder. 100-ml size.

6.3 Analysis. The following are required for analysis:

6.3.1 Gas Chromatograph. GC with an FID, programmable temperature control, and heated liquid injection port.

6.3.2 Pump. Capable of pumping 100 ml/min. For flushing sample loop.

6.3.3 Flow Meter. To monitor accurately sample loop flow rate of 100 ml/min.

6.3.4 Regulators. Two-stage regulators used on gas cylinders for GC and for cylinder standards.

6.3.5 Recorder. To record, integrate, and store chromatograms.

6.3.6 Syringes. 1.0- and 10-microliter (l) size, calibrated, for injecting samples.

6.3.7 Tubing Fittings. Stainless steel, to plumb GC and gas cylinders.

6.3.8 Vials. Two 5.0-ml glass vials with screw caps fitted with Teflon®-lined septa for each sample.

6.3.9 Pipettes. Volumetric type, assorted sizes for preparing calibration standards.

6.3.10 Volumetric Flasks. Assorted sizes for preparing calibration standards.

6.3.11 Vials. Glass 40-ml with Teflon®-lined septa, to store calibration standards (one per standard).

7.0 Reagents and Standards

NOTE: Unless otherwise indicated, all reagents must conform to the specifications established by the Committee on Analytical Reagents of the American Chemical Society. Where such specifications are not available, use the best available grade.

7.1 Sampling. The following are required for sampling:

7.1.1 Water. Deionized distilled to conform to the American Society for Testing and Materials (ASTM) Specification D 1193–77, Type 3. At the option of the analyst, the potassium permanganate ($KMnO_4$) test for oxidizable organic matter may be omitted when high concentrations of organic matter are not expected to be present.

7.1.2 Silica Gel. Deactivated chromatographic grade 20/40 mesh silica gel packed in glass adsorbent tubes. The silica gel is packed in two sections. The front section contains 520 milligrams (mg) of silica gel, and the back section contains 260 mg.

7.2 Analysis. The following are required for analysis:

7.2.1 Water. Same as specified in section 7.1.1.

7.2.2 n-Propanol, 3 Percent. Mix 3 ml of n-propanol with 97 ml of water.

7.2.3 Methanol Stock Standard. Prepare a methanol stock standard by weighing 1 gram of methanol into a 100-ml volumetric flask. Dilute to 100 ml with water.

7.2.3.1 Methanol Working Standard. Prepare a methanol working standard by pipetting 1 ml of the methanol stock standard into a 100-ml volumetric flask. Dilute the solution to 100 ml with water.

7.2.3.2 Methanol Standards For Impinger Samples. Prepare a series of methanol standards by pipetting 1, 2, 5, 10, and 25 ml of methanol working standard solution respectively into five 50-ml volumetric flasks. Dilute the solutions to 50 ml with water. These standards will have 2, 4, 10, 20, and 50 μg/ml of methanol, respectively. After preparation, transfer the solutions to 40-ml glass vials capped with Teflon® septa and store the vials under refrigeration. Discard any excess solution.

7.2.3.3 Methanol Standards for Adsorbent Tube Samples. Prepare a series of methanol standards by first pipetting 10 ml of the methanol working standard into a 100-ml volumetric flask and diluting the contents to exactly 100 ml with 3 percent n-propanol solution. This standard will contain 10 μg/ml of methanol. Pipette 5, 15, and 25 ml of this standard, respectively, into four 50-ml volumetric flasks. Dilute each solution to 50 ml with 3 percent n-propanol solution. These standards will have 1, 3, and 5 μg/ml of methanol, respectively. Transfer all four standards into 40-ml glass vials capped with Teflon®-lined septa and store under refrigeration. Discard any excess solution.

7.2.4 GC Column. Capillary column, 30 meters (100 feet) long with an inside diameter (ID) of 0.53 mm (0.02 inch), coated with DB 624 to a film thickness of 3.0 micrometers, (μm) or an equivalent column. Alternatively, a 30-meter capillary column coated with polyethylene glycol to a film thickness of 1 μm such as AT–WAX or its equivalent.

7.2.5 Helium. Ultra high purity.

7.2.6 Hydrogen. Zero grade.

7.2.7 Oxygen. Zero grade.

8.0 Procedure

8.1 Sampling. The following items are required for sampling:

8.1.1 Preparation of Collection Train. Measure 20 ml of water into the midget impinger. The adsorbent tube must contain 520 mg of silica gel in the front section and 260 mg of silica gel in the backup section. Assemble the train as shown in Figure 308–1. An optional, second impinger that is left empty may be placed in front of the water-containing impinger to act as a condensate trap. Place crushed ice and water around the impinger.

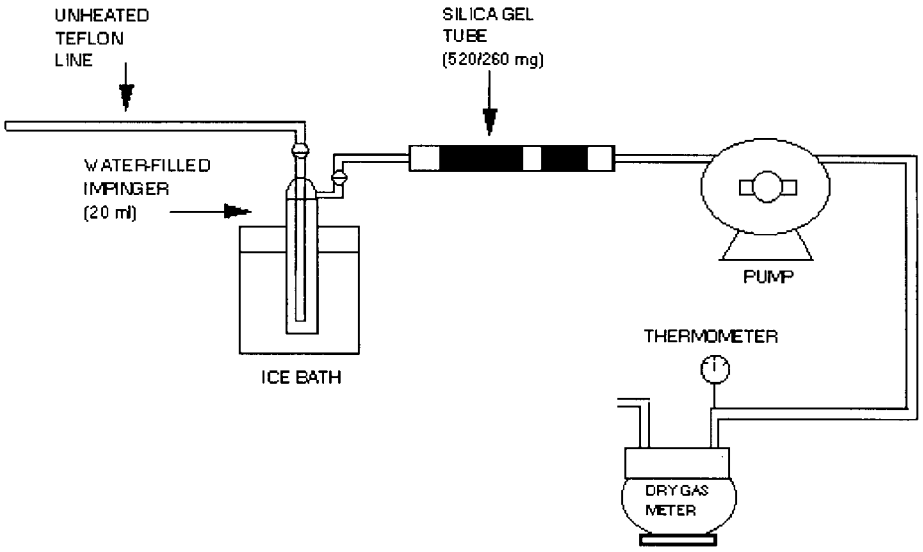

Figure 308.1. Sampling train schematic

8.1.2 Leak Check. A leak check prior to the sampling run is optional; however, a leak check after the sampling run is mandatory. The leak-check procedure is as follows:

Temporarily attach a suitable (e.g., 0-to 40-ml/min) rotameter to the outlet of the DGM, and place a vacuum gauge at or near the probe inlet. Plug the probe inlet, pull a vacuum of at least 250 mm (10 inch) Hg, and note the flow rate as indicated by the rotameter. A leakage rate not in excess of 2 percent of the average sampling rate is acceptable.

NOTE: Carefully release the probe inlet plug before turning off the pump.

8.1.3 Sample Collection. Record the initial DGM reading and barometric pressure. To begin sampling, position the tip of the Teflon® tubing at the sampling point, connect the tubing to the impinger, and start the pump. Adjust the sample flow to a constant rate between 200 and 1000 ml/min as indicated by the rotameter. Maintain this constant rate (±10 percent) during the entire sampling run. Take readings (DGM, temperatures at DGM and at impinger outlet, and rate meter) at least every 5 minutes. Add more ice during the run to keep the temperature of the gases leaving the last impinger at 20 °C (68 °F) or less. At the conclusion of each run,

turn off the pump, remove the Teflon® tubing from the stack, and record the final readings. Conduct a leak check as in section 8.1.2. (This leak check is mandatory.) If a leak is found, void the test run or use procedures acceptable to the Administrator to adjust the sample volume for the leakage.

8.2 Sample Recovery. The following items are required for sample recovery:

8.2.1 Impinger. Disconnect the impinger. Pour the contents of the midget impinger into a graduated cylinder. Rinse the midget impinger and the connecting tubes with water, and add the rinses to the graduated cylinder. Record the sample volume. Transfer the sample to a glass vial and cap with a Teflon® septum. Discard any excess sample. Place the samples in an ice chest for shipment to the laboratory.

8.2.2. Adsorbent Tubes. Seal the silica gel adsorbent tubes and place them in an ice chest for shipment to the laboratory.

9.0 Quality Control

9.1 Miscellaneous Quality Control Measures. The following quality control measures are required:

Section	Quality control measure	Effect
8.1.2, 8.1.3, 10.1.	Sampling equipment leak check and calibration.	Ensures accurate measurement of sample volume.
10.2	GC calibration	Ensures precision of GC analysis.

9.2 Applicability. When the method is used to analyze samples to demonstrate compliance with a source emission regulation, an audit sample must be analyzed, subject to availability.

9.3 Audit Procedure. Analyze an audit sample with each set of compliance samples. Concurrently analyze the audit sample and a set of compliance samples in the same manner to evaluate the technique of the analyst and the standards preparation. The same analyst, analytical reagents, and analytical system shall be used both for the compliance samples and the EPA audit sample.

9.4 Audit Sample Availability. Audit samples will be supplied only to enforcement agencies for compliance tests. Audit samples may be obtained by writing: Source Test Audit Coordinator (MD–77B), Air Measurement Research Division, National Exposure Research Laboratory, U.S. Environmental Protection Agency, Research Triangle Park, NC 27711; or by calling the Source Test Audit Coordinator (STAC) at (919) 541–7834. The audit sample request must be made at least 30 days prior to the scheduled compliance sample analysis.

9.5 Audit Results. Calculate the audit sample concentration according to the calculation procedure provided in the audit instructions included with the audit sample. Fill in the audit sample concentration and the analyst's name on the audit response form included with the audit instructions. Send one copy to the EPA Regional Office or the appropriate enforcement agency and a second copy to the STAC. The EPA Regional office or the appropriate enforcement agency will report the results of the audit to the laboratory being audited. Include this response with the results of the compliance samples in relevant reports to the EPA Regional Office or the appropriate enforcement agency.

10.0 Calibration and Standardization

10.1 Metering System. The following items are required for the metering system:

10.1.1 Initial Calibration.

10.1.1.1 Before its initial use in the field, first leak-check the metering system (drying tube, needle valve, pump, rotameter, and DGM) as follows: Place a vacuum gauge at the inlet to the drying tube, and pull a vacuum of 250 mm (10 inch) Hg; plug or pinch off the outlet of the flow meter, and then turn off the pump. The vacuum shall remain stable for at least 30 seconds. Carefully release the vacuum gauge before releasing the flow meter end.

10.1.1.2 Next, remove the drying tube, and calibrate the metering system (at the sampling flow rate specified by the method) as follows: Connect an appropriately sized wet test meter (e.g., 1 liter per revolution (0.035 cubic feet per revolution)) to the inlet of the drying tube. Make three independent calibrations runs, using at least five revolutions of the DGM per run. Calculate the calibration factor, Y (wet test meter calibration volume divided by the DGM volume, both volumes adjusted to the same reference temperature and pressure), for each run, and average the results. If any Y-value deviates by more than 2 percent from the average, the metering system is unacceptable for use. Otherwise, use the average as the calibration factor for subsequent test runs.

10.1.2 Posttest Calibration Check. After each field test series, conduct a calibration check as in section 10.1.1 above, except for the following variations: (a) The leak check is not to be conducted, (b) three, or more revolutions of the DGM may be used, and (c) only two independent runs need be made. If the calibration factor does not deviate by more than 5 percent from the initial calibration factor (determined in section 10.1.1), then the DGM volumes obtained during the test series are acceptable. If the calibration factor deviates by more than 5 percent, recalibrate the metering system as in section 10.1.1, and for the calculations, use the calibration factor (initial or recalibration) that yields the lower gas volume for each test run.

10.1.3 Temperature Sensors. Calibrate against mercury-in-glass thermometers.

10.1.4 Rotameter. The rotameter need not be calibrated, but should be cleaned and maintained according to the manufacturer's instruction.

10.1.5 Barometer. Calibrate against a mercury barometer.

10.2 Gas Chromatograph. The following procedures are required for the gas chromatograph:

10.2.1 Initial Calibration. Inject 1 µl of each of the standards prepared in sections 7.2.3.3 and 7.2.3.4 into the GC and record the response. Repeat the injections for each standard until two successive injections agree within 5 percent. Using the mean response for each calibration standard, prepare a linear least squares equation relating the response to the mass of methanol in the sample. Perform the calibration before analyzing each set of samples.

10.2.2 Continuing Calibration. At the beginning of each day, analyze the mid level calibration standard as described in section 10.5.1. The response from the daily analysis must agree with the response from the initial calibration within 10 percent. If it does not, the initial calibration must be repeated.

11.0 Analytical Procedure

11.1 Gas Chromatograph Operating Conditions. The following operating conditions are required for the GC:

11.1.1 Injector. Configured for capillary column, splitless, 200 °C (392 °F).

11.1.2 Carrier. Helium at 10 ml/min.

11.1.3 Oven. Initially at 45 °C for 3 minutes; then raise by 10 °C to 70 °C; then raise by 70 °C/min to 200 °C.

11.2 Impinger Sample. Inject 1 µl of the stored sample into the GC. Repeat the injection and average the results. If the sample response is above that of the highest calibration standard, either dilute the sample until it is in the measurement range of the calibration line or prepare additional calibration standards. If the sample response is below that of the lowest calibration standard, prepare additional calibration standards. If additional calibration standards are prepared, there shall be at least two that bracket the response of the sample. These standards should produce approximately 50 percent and 150 percent of the response of the sample.

11.3 Silica Gel Adsorbent Sample. The following items are required for the silica gel adsorbent samples:

11.3.1 Preparation of Samples. Extract the front and backup sections of the adsorbent tube separately. With a file, score the glass adsorbent tube in front of the first section of silica gel. Break the tube open. Remove and discard the glass wool. Transfer the first section of the silica gel to a 5-ml glass vial and stopper the vial. Remove the spacer between the first and second section of the adsorbent tube and discard it. Transfer the second section of silica gel to a separate 5-ml glass vial and stopper the vial.

11.3.2 Desorption of Samples. Add 3 ml of the 10 percent n-propanol solution to each of the stoppered vials and shake or vibrate the vials for 30 minutes.

11.3.3 Inject a 1-µl aliquot of the diluted sample from each vial into the GC. Repeat the injection and average the results. If the sample response is above that of the highest calibration standard, either dilute the sample until it is in the measurement range of the calibration line or prepare additional calibration standards. If the sample response is below that of the lowest calibration standard, prepare additional calibration standards. If additional calibration standards are prepared, there shall be at least two that bracket the response of the sample. These standards should produce approximately 50 percent and 150 percent of the response of the sample.

12.0 Data Analysis and Calculations

12.1 Nomenclature.

C_{af}=Concentration of methanol in the front of the adsorbent tube, µg/ml.

C_{ab}=Concentration of methanol in the back of the adsorbent tube, µg/ml.

C_i=Concentration of methanol in the impinger portion of the sample train, µg/ml.

E=Mass emission rate of methanol, µg/hr (lb/hr).

M_{tot}=Total mass of methanol collected in the sample train, µg.

P_{bar}=Barometric pressure at the exit orifice of the DGM, mm Hg (in. Hg).

P_{std}=Standard absolute pressure, 760 mm Hg (29.92 in. Hg).

Q_{std}=Dry volumetric stack gas flow rate corrected to standard conditions, dscm/hr (dscf/hr).

T_m=Average DGM absolute temperature, degrees K (°R).

T_{std}=Standard absolute temperature, 293 degrees K (528 °R).

V_{af}=Volume of front half adsorbent sample, ml.

V_{ab}=Volume of back half adsorbent sample, ml.

V_i=Volume of impinger sample, ml.

V_m=Dry gas volume as measured by the DGM, dry cubic meters (dcm), dry cubic feet (dcf).

$V_{m(std)}$=Dry gas volume measured by the DGM, corrected to standard conditions, dry standard cubic meters (dscm), dry standard cubic feet (dscf).

12.2 Mass of Methanol. Calculate the total mass of methanol collected in the sampling train using Equation 308–1.

$$M_{tot} = V_i C_i + V_{af} C_{af} + V_{ab} C_{ab} \qquad \text{Equation 308-1}$$

12.3 Dry Sample Gas Volume, Corrected to Standard Conditions. Calculate the volume of gas sampled at standard conditions using Equation 308–2.

$$V_m(std) = \frac{V_m Y T_{std} P_{bar}}{T_m P_{std}} \qquad \text{Equation 308-2}$$

12.4 Mass Emission Rate of Methanol. Calculate the mass emission rate of methanol using Equation 308–3.

$$E = \frac{M_{tot} Q_{sd}}{V_{m(std)}} \qquad \text{Equation 308-3}$$

13.0 Method Performance. [Reserved]

14.0 Pollution Prevention. [Reserved]

15.0 Waste Management. [Reserved]

16.0 Bibliography

1. Rom, J.J. ''Maintenance, Calibration, and Operation of Isokinetic Source Sampling Equipment.'' Office of Air Programs, Environmental Protection Agency. Research Triangle Park, NC. APTD–0576 March 1972.

2. Annual Book of ASTM Standards. Part 31; Water, Atmospheric Analysis. American Society for Testing and Materials. Philadelphia, PA. 1974. pp. 40–42.

3. Westlin, P.R. and R.T. Shigehara. ''Procedure for Calibrating and Using Dry Gas Volume Meters as Calibration Standards.'' Source Evaluation Society Newsletter. *3*(1) :17–30. February 1978.

4. Yu, K.K. ''Evaluation of Moisture Effect on Dry Gas Meter Calibration.'' Source Evaluation Society Newsletter. *5*(1) :24–28. February 1980.

5. NIOSH Manual of Analytical Methods, Volume 2. U.S. Department of Health and Human Services National Institute for Occupational Safety and Health. Center for Disease Control. 4676 Columbia Parkway, Cincinnati, OH 45226. (available from the Superintendent of Documents, Government Printing Office, Washington, DC 20402.)

6. Pinkerton, J.E. ''Method for Measuring Methanol in Pulp Mill Vent Gases.'' National Council of the Pulp and Paper Industry for Air and Stream Improvement, Inc., New York, NY.

17.0 Tables, Diagrams, Flowcharts, and Validation Data. [Reserved]

METHOD 310A—DETERMINATION OF RESIDUAL HEXANE THROUGH GAS CHROMATOGRAPHY

1.0 Scope and Application

1.1 This method is used to analyze any crumb rubber or water samples for residual hexane content.

1.2 The sample is heated in a sealed bottle with an internal standard and the vapor is analyzed by gas chromatography.

2.0 Summary of Method

2.1 This method, utilizing a capillary column gas chromatograph with a flame ionization detector, determines the concentration of residual hexane in rubber crumb samples.

3.0 Definitions

3.1 The definitions are included in the text as needed.

4.0 Interferences

4.1 There are no known interferences.

5.0 Safety

5.1 It is the responsibility of the user of this procedure to establish safety and health practices applicable to their specific operation.

6.0 Equipment and Supplies

6.1 Gas Chromatograph with a flame ionization detector and data handling station equipped with a capillary column 30 meters long.

6.2 Chromatograph conditions for Sigma 1:

6.2.1 Helium pressure: 50# inlet A, 14# aux

6.2.2 Carrier flow: 25 cc/min

6.2.3 Range switch: 100x

6.2.4 DB: 1 capillary column

6.3 Chromatograph conditions for Hewlett-Packard GC:

6.3.1 Initial temperature: 40 °C

6.3.2 Initial time: 8 min

6.3.3 Rate: 0

6.3.4 Range: 2

6.3.5 DB: 1705 capillary column

6.4 Septum bottles and stoppers

6.5 Gas Syringe—0.5 cc

7.0 Reagents and Standards

7.1 Chloroform, 99.9+%, A.S.C. HPLC grade

8.0 Sample Collection, Preservation, and Storage

8.1 A representative sample should be caught in a clean 8 oz. container with a secure lid.

8.2 The container should be labeled with sample identification, date and time.

9.0 Quality Control

9.1 The instrument is calibrated by injecting calibration solution (Section 10.2 of this method) five times.

9.2 The retention time for components of interest and relative response of monomer to the internal standard is determined.

9.3 Recovery efficiency must be determined once for each sample type and whenever modifications are made to the method.

9.3.1 Determine the percent hexane in three separate dried rubber crumb samples.

9.3.2 Weigh a portion of each crumb sample into separate sample bottles and add a known amount of hexane (10 microliters) by microliter syringe and 20 microliters of internal standard. Analyze each by the described procedure and calculate the percent recovery of the known added hexane.

9.3.3 Repeat the previous step using twice the hexane level (20 microliters), analyze and calculate the percent recovery of the known added hexane.

9.3.4 Set up two additional sets of samples using 10 microliters and 20 microliters of hexane as before, but add an amount of water equal to the dry crumb used. Analyze and calculate percent recovery to show the effect of free water on the results obtained.

9.3.5 A value of R between 0.70 and 1.30 is acceptable.

9.3.6 R shall be used to correct all reported results for each compound by dividing the measured results of each compound by the R for that compound for the same sample type.

10.0 Calibration and Instrument Settings

10.1 Calibrate the chromatograph using a standard made by injecting 10 µl of fresh hexane and 20 µl of chloroform into a sealed septum bottle. This standard will be 0.6 wt.% *total* hexane based on 1 gram of dry rubber.

10.2 Analyze the hexane used and calculate the percentage of each hexane isomer (2-methylpentane, 3-methylpentane, n-hexane, and methylcyclo-pentane). Enter these percentages into the method calibration table.

10.3 Heat the standard bottle for 30 minutes in a 105 °C oven.

10.4 Inject about 0.25 cc of vapor into the gas chromatograph and after the analysis is finished, calibrate according to the procedures described by the instrument manufacturer.

11.0 Procedure

11.1 Using a cold mill set at a wide roller gap (125–150 mm), mill about 250 grams of crumb two times to homogenize the sample.

11.2 Weigh about 2 grams of wet crumb into a septum bottle and cap with a septum ring. Add 20 µl of chloroform with a syringe and place in a 105 °C oven for 45 minutes.

11.3 Run the moisture content on a separate portion of the sample and calculate the grams of dry rubber put into the septum bottle.

11.4 Set up the data station on the required method and enter the dry rubber weight in the sample weight field.

11.5 Inject a 0.25 cc vapor sample into the chromatograph and push the start button.

11.6 At the end of the analysis, the data station will print a report listing the concentration of each identified component.

11.7 To analyze water samples, pipet 5 ml of sample into the septum bottle, cap and add 20 µl of chloroform. Place in a 105 °C oven for 30 minutes.

11.8 Enter 5 grams into the sample weight field.

11.9 Inject a 0.25 cc vapor sample into the chromatograph and push the start button.

11.10 At the end of the analysis, the data station will print a report listing the concentration of each identified component.

12.0 Data Analysis and Calculation

12.1 For samples that are prepared as in section 11 of this method, ppm n-hexane is read directly from the computer.

12.2 The formulas for calculation of the results are as follows:

$$ppm_{hexane}=(A_{hexane}\times R_{hexane})/(A_{is}\times R_{is})$$

Where:

A_{hexane}=area of hexane

R_{hexane}=response of hexane

A_{is}=area of the internal standard

R_{is}=response of the internal standard

% hexane in crumb=(ppm_{hexane}/sample amount)100

12.3 Correct the results by the value of R (as determined in sections 9.3.4, 9.3.5, and 9.3.6 of this method).

13.0 Method Performance

13.1 The test has a standard deviation of 0.14 wt% at 0.66 wt% hexane. Spike recovery of 12 samples at two levels of hexane averaged 102.3%. Note: Recovery must be determined for each type of sample. The values given here are meant to be examples of method performance.

14.0 Pollution Prevention

14.1 Waste generation should be minimized where possible. Sample size should be an amount necessary to adequately run the analysis.

15.0 Waste Management

15.1 All waste shall be handled in accordance with federal and state environmental regulations.

16.0 References and Publications

16.1 DSM Copolymer Test Method T–3380.

METHOD 310B—DETERMINATION OF RESIDUAL HEXANE THROUGH GAS CHROMATOGRAPHY

1.0 Scope and Application

Analyte	CAS No.	Matrix	Method sensitivity (5.5g sample size)
Hexane	110–54–3	Rubber crumb	.01 wt%.
Applicable Termonomer		Rubber crumb	.001 wt%.

1.1 Data Quality Objectives:

In the production of ethylene-propylene terpolymer crumb rubber, the polymer is recovered from solution by flashing off the solvent with steam and hot water. The resulting water-crumb slurry is then pumped to the finishing units. Certain amounts of solvent (hexane being the most commonly used solvent) and diene monomer remain in the crumb. The analyst uses the following procedure to determine those amounts.

2.0 Summary of Method

2.1 The crumb rubber sample is dissolved in toluene to which heptane has been added as an internal standard. Acetone is then added to this solution to precipitate the crumb, and the supernatant is analyzed for hexane and diene by a gas chromatograph equipped with a flame ionization detector (FID).

3.0 Definitions

3.1 Included in text as needed.

4.0 Interferences

4.1 None known.

4.2 Benzene, introduced as a contaminant in the toluene solvent, elutes between methyl cyclopentane and cyclohexane. However, the benzene peak is completely resolved.

4.3 2,2-dimethyl pentane, a minor component of the hexane used in our process, elutes just prior to methyl cyclopentane. It is included as ''hexane'' in the analysis whether it is integrated separately or included in the methyl cyclopentane peak.

5.0 Safety

5.1 This procedure does not purport to address all of the safety concerns associated with its use. It is the responsibility of the user of this procedure to establish appropriate safety and health practices and determine the applicability of regulatory limitations prior to use.

5.2 Chemicals used in this analysis are flammable and hazardous (see specific toxicity information below). Avoid contact with sources of ignition during sample prep. All handling should be done beneath a hood. Playtex or nitrile gloves recommended.

5.3 Hexane is toxic by ingestion and inhalation. Vapor inhalation causes irritation of nasal and respiratory passages, headache, dizziness, nausea, central nervous system depression. Chronic overexposure can cause severe nerve damage. May cause irritation on contact with skin or eyes. May cause damage to kidneys.

5.4 Termonomer may be harmful by inhalation, ingestion, or skin absorption. Vapor or mist is irritating to the eyes, mucous membranes, and upper respiratory tract. Causes skin irritation.

5.5 Toluene is harmful or fatal if swallowed. Vapor harmful if inhaled. Symptoms: headache, dizziness, hallucinations, distorted perceptions, changes in motor activity, nausea, diarrhea, respiratory irritation, central nervous system depression, unconsciousness, liver, kidney and lung damage. Contact can cause severe eye irritation. May cause skin irritation. Causes irritation of eyes, nose, and throat.

5.6 Acetone, at high concentrations or prolonged overexposure, may cause headache, dizziness, irritation of eyes and respiratory tract, loss of strength, and narcosis. Eye contact causes severe irritation; skin contact may cause mild irritation. Concentrations of 20,000 ppm are immediately dangerous to life and health.

5.7 Heptane is harmful if inhaled or swallowed. May be harmful if absorbed through the skin. Vapor or mist is irritating to the eyes, mucous membranes, and upper respiratory tract. Prolonged or repeated exposure to skin causes defatting and dermatitis.

5.8 The steam oven used to dry the polymer in this procedure is set at 110 °C. Wear leather gloves when removing bottles from the oven.

6.0 Equipment and Supplies

6.1 4000-ml volumetric flask

6.2 100-ml volumetric pipette

6.3 1000-ml volumetric flask

6.4 8-oz. French Square sample bottles with plastic-lined caps

6.5 Top-loading balance

6.6 Laboratory shaker

6.7 Laboratory oven set at 110 °C (steam oven)

6.8 Gas chromatograph, Hewlett-Packard 5890A, or equivalent, interfaced with HP 7673A (or equivalent) autosampler (equipped with nanoliter adapter and robotic arm), and HP 3396 series II or 3392A (or equivalent) integrator/controller.

6.9 GC column, capillary type, 50m × 0.53mm, methyl silicone, 5 micron film thickness, Quadrex, or equivalent.

6.10 Computerized data acquisition system, such as CIS/CALS

6.11 Crimp-top sample vials and HP p/n 5181–1211 crimp caps, or screw-top autosampler vials and screw tops.

6.12 Glass syringes, 5-ml, with ''Luer-lock'' fitting

6.13 Filters, PTFE, .45µm pore size, Gelman Acrodisc or equivalent, to fit on Luer-lock syringes (in 6.12, above).

7.0 Reagents and Standards

7.1 Reagent toluene, EM Science Omnisolv (or equivalent)

Purity Check: Prior to using any bottle of reagent toluene, analyze it according to section 11.2 of this method. Use the bottle only if hexane, heptane, and termonomer peak areas are less than 15 each (note that an area of 15 is equivalent to less than 0.01 wt% in a 10g sample).

7.2 Reagent acetone, EM Science Omnisolv HR-GC (or equivalent)

Purity Check: Prior to using any bottle of reagent acetone, analyze it according to section 11.2 of this method. Use the bottle only if hexane, heptane, and termonomer peak areas are less than 15 each.

7.3 Reagent heptane, Aldrich Chemical Gold Label, Cat #15,487–3 (or equivalent)

Purity Check: Prior to using any bottle of reagent heptane, analyze it according to section 11.2 of this method. Use the bottle only if hexane and termonomer peak areas are less than 5 each.

7.4 Internal standard solution—used as a concentrate for preparation of the more dilute Polymer Dissolving Solution. It contains 12.00g heptane/100ml of solution which is 120.0g per liter.

Preparation of internal standard solution (polymer dissolving stock solution):

Action	Notes
7.4.1 Tare a clean, dry 1-liter volumetric flask on the balance. Record the weight to three places.	If the 1-liter volumetric flask is too tall to fit in the balance case, you can shield the flask from drafts by inverting a paint bucket with a hole cut in the bottom over the balance cover. Allow the neck of the flask to project through the hole in the bucket.
7.4.2 Weigh 120.00 g of n-heptane into the flask. Record the total weight of the flask and heptane as well as the weight of heptane added.	Use 99+% n-heptane from Aldrich or Janssen Chimica.
7.4.3 Fill the flask close to the mark with toluene, about 1 to 2″ below the mark.	Use EM Science Omnisolve toluene, Grade TX0737–1, or equivalent.
7.4.4 Shake the flask vigorously to mix the contents	Allow any bubbles to clear before proceeding to the next step.
7.4.5 Top off the flask to the mark with toluene. Shake vigorously, as in section 7.4.4 of this method, to mix well.	
7.4.6 Weigh the flask containing the solution on the three place balance record the weight	
7.4.7 Transfer the contents of the flask to a 1 qt Boston round bottle.	Discard any excess solution
7.4.8 Label the bottle with the identity of the contents, the weights of heptane and toluene used, the date of preparation and the preparer's name.	Be sure to include the words *''Hexane in Crumb Polymer Dissolving Stock Solution''* on the label.
7.4.9 Refrigerate the completed blend for the use of the routine Technicians.	

7.5 Polymer Dissolving Solution (''PDS'')—Heptane (as internal standard) in toluene. This solution contains 0.3g of heptane internal standard per 100 ml of solution.

7.5.1 Preparation of Polymer Dissolving Solution. Fill a 4,000-ml volumetric flask about ¾ full with toluene.

7.5.2 Add 100 ml of the internal standard solution (section 7.4 of this method) to the flask using the 100ml pipette.

7.5.3 Fill the flask to the mark with toluene. Discard any excess.

7.5.4 Add a large magnetic stirring bar to the flask and mix by stirring.

7.5.5 Transfer the polymer solvent solution to the one-gallon labeled container with 50ml volumetric dispenser attached.

7.5.6 Purity Check: Analyze according to section 11.2. *NOTE:* You must ''precipitate'' the sample with an equal part of acetone (thus duplicating actual test conditions— see section 11.1 of this method, sample prep) before analyzing. Analyze the reagent 3 times to quantify the C_6 and termonomer interferences. Inspect the results to ensure good agreement among the three runs (within 10%).

7.5.7 Tag the bottle with the following information:

POLYMER DISSOLVING SOLUTION FOR C_6 IN CRUMB ANALYSIS
PREPARER'S NAME
DATE
CALS FILE ID'S OF THE THREE ANALYSES FOR PURITY (from section 7.5.6 of this method)

7.6 Quality Control Solution: the quality control solution is prepared by adding specific amounts of mixed hexanes (barge hexane), n-nonane and termonomer to some polymer dissolving solution. Nonane elutes in the same approximate time region as termonomer and is used to quantify in that region because it has a longer shelf life. Termonomer, having a high tendency to polymerize, is used in the QC solution only to ensure that both termonomer isomers elute at the proper time.

First, a concentrated stock solution is prepared; the final QC solution can then be prepared by diluting the stock solution.

7.6.1 In preparation of stock solution, fill a 1-liter volumetric flask partially with polymer dissolving solution (PDS)—see section 7.5 of this method. Add 20.0 ml barge hexane, 5.0 ml n-nonane, and 3 ml termonomer. Finish filling the volumetric to the mark with PDS.

7.6.2 In preparation of quality control solution, dilute the quality control stock solution (above) precisely 1:10 with PDS, i.e. 10 ml of stock solution made up to 100 ml (volumetric flask) with PDS. Pour the solution into a 4 oz. Boston round bottle and store in the refrigerator.

8.0 Sample Collection, Preservation and Storage

8.1 Line up facility to catch crumb samples. The facility is a special facility where the sample is drawn.

8.1.1 Ensure that the cock valve beneath facility is closed.

8.1.2 Line up the system from the slurry line cock valve to the cock valve at the nozzle on the stripper.

8.1.3 Allow the system to flush through facility for a period of 30 seconds.

8.2 Catch a slurry crumb sample.

8.2.1 Simultaneously close the cock valves upstream and downstream of facility.

8.2.2 Close the cock valve beneath the slurry line in service.

8.2.3 Line up the cooling tower water through the sample bomb water jacket to the sewer for a minimum of 30 minutes.

8.2.4 Place the sample catching basket beneath facility and open the cock valve underneath the bomb to retrieve the rubber crumb.

8.2.5 If no rubber falls by gravity into the basket, line up nitrogen to the bleeder upstream of the sample bomb and force the rubber into the basket.

8.2.6 Close the cock valve underneath the sample bomb.

8.3 Fill a plastic ''Whirl-pak'' sample bag with slurry crumb and send it to the lab immediately.

8.4 Once the sample reaches the lab, it should be prepped as soon as possible to avoid hexane loss through evaporation. Samples which have lain untouched for more than 30 minutes should be discarded.

9.0 Quality Control

Quality control is monitored via a computer program that tracks analyses of a prepared QC sample (from section 7.6.2 of this method). The QC sample result is entered daily into the program, which plots the result as a data point on a statistical chart. If the data point does not satisfy the ''in-control'' criteria (as defined by the lab quality facilitator), an ''out-of-control'' flag appears, mandating corrective action.

In addition, the area of the n-heptane peak is monitored so that any errors in making up the polymer dissolving solution will be caught and corrected. Refer to section 12.4 of this method.

9.1 Fill an autosampler vial with the quality control solution (from section 7.6.2 of this method) and analyze on the GC as normal (per section 11 of this method).

9.2 Add the concentrations of the 5 hexane isomers as they appear on the CALS printout. Also include the 2,2-dimethyl-pentane peak just ahead of the methyl cyclopentane (the fourth major isomer) peak in the event that the peak integration split this peak out. Do not include the benzene peak in the sum.

Note the nonane concentration. Record both results (total hexane and nonane) in the QC computer program. If out of control, and GC appears to be functioning within normal parameters, reanalyze a fresh control sample. If the fresh QC is not in control, check stock solution for contaminants or make up a new QC sample with the toluene currently in use. If instrument remains out-of-control, more thorough GC troubleshooting may be needed.

Also, verify that the instrument has detected both isomers of termonomer (quantification not necessary—see section 7.0 of this method).

9.3 Recovery efficiency must be determined for high ethylene concentration, low ethylene concentration, E-P terpolymer, or oil extended samples and whenever modifications are made to the method. Recovery shall be between 70 and 130 percent. All test results must be corrected by the recovery efficiency value (R).

9.3.1 Approximately 10 grams of wet EPDM crumb (equivalent to about 5 grams of dry rubber) shall be added to six sample bottles containing 100 ml of hexane in crumb polymer dissolving solution (toluene containing 0.3 gram n-heptane/100 ml solution). The polymer shall be dissolved by agitating the bottles on a shaker for 4 hours. The polymer shall be precipitated using 100 ml acetone.

9.3.2 The supernatant liquid shall be decanted from the polymer. Care shall be taken to remove as much of the liquid phase from the sample as possible to minimize the effect of retained liquid phase upon the next cycle of the analysis. The supernatant liquid shall be analyzed by gas chromatography using an internal standard quantitation method with heptane as the internal standard.

9.3.3 The precipitated polymer from the steps described above shall be redissolved using toluene as the solvent. No heptane shall be added to the sample in the second dissolving step. The toluene solvent and acetone precipitant shall be determined to be free of interfering compounds.

9.3.4 The rubber which was dissolved in the toluene shall be precipitated with acetone as before, and the supernatant liquid decanted from the precipitated polymer. The liquid shall be analyzed by gas chromatography and the rubber phase dried in a steam-oven to determine the final polymer weight.

9.3.5 The ratios of the areas of the hexane peaks and of the heptane internal standard peak shall be calculated for each of the six samples in the two analysis cycles outlined above. The area ratios of the total hexane to heptane (R1) shall be determined for the two analysis cycles of the sample set. The ratio of the values of R1 from the second analysis cycle to the first cycle shall be determined to give a second ratio (R2).

10.0 Calibration and Standardization

The procedure for preparing a Quality Control sample with the internal standard in it is outlined in section 7.6 of this method.

10.1 The relative FID response factors for n-heptane, the internal standard, versus the various hexane isomers and termonomer are relatively constant and should seldom need to be altered. However Baseline construction is a most critical factor in the production of good data. For this reason, close attention should be paid to peak integration. Procedures for handling peak integration will depend upon the data system used.

10.2 If recalibration of the analysis is needed, make up a calibration blend of the internal standard and the analytes as detailed below and analyze it using the analytical method used for the samples.

10.2.1 Weigh 5 g heptane into a tared scintillation vial to five places.

10.2.2 Add 0.2 ml termonomer to the vial and reweigh.

10.2.3 Add 0.5 ml hexane to the vial and reweigh.

10.2.4 Cap, and shake vigorously to mix.

10.2.5 Calculate the weights of termonomer and of hexane added and divide their weights by the weight of the n-heptane added. The result is the known of given value for the calibration.

10.2.6 Add 0.4 ml of this mixture to a mixture of 100 ml toluene and 100 ml of acetone. Cap and shake vigorously to mix.

10.2.7 Analyze the sample.

10.2.8 Divide the termonomer area and the total areas of the hexane peaks by the n-heptane area. This result is the ''found'' value for the calibration.

10.2.9 Divide the appropriate ''known'' value from 10.2.5 by the found value from 10.2.8. The result is the response factor for the analyte in question. Previous work has shown that the standard deviation of the calibration method is about 1% relative.

11.0 Procedure

11.1 SAMPLE PREPARATION

11.1.1 Tare an 8oz sample bottle—Tag attached, cap off; record weight and sample ID on tag in pencil.

11.1.2 Place crumb sample in bottle: RLA–3: 10 g (gives a dry wt. of ~5.5 g).

11.1.3 Dispense 100ml of PDS into each bottle. SAMPLE SHOULD BE PLACED INTO SOLUTION ASAP TO AVOID HEXANE LOSS—Using ''Dispensette'' pipettor. *Before dispensing, ''purge'' the dispensette (25% of its volume) into a waste bottle to eliminate any voids.*

11.1.4 Tightly cap bottles and load samples into shaker.

11.1.5 Insure that ''ON–OFF'' switch on the shaker itself is ''ON.''

11.1.6 Locate shaker timer. Insure that toggle switch atop timer control box is in

the middle (''off'') position. If display reads ''04:00'' (4 hours), move toggle switch to the left position. Shaker should begin operating.

11.1.7 After shaker stops, add 100 ml acetone to each sample to precipitate polymer. Shake minimum of 5 minutes on shaker—Vistalon sample may not have fully dissolved; nevertheless, for purposes of consistency, 4 hours is the agreed-upon dissolving time.

11.1.8 Using a 5-ml glass Luer-lock syringe and Acrodisc filter, filter some of the supernatant liquid into an autosampler vial; crimp the vial and load it into the GC autosampler for analysis (section 11.2 of this method)—The samples are filtered to prevent polymer buildup in the GC. Clean the syringes in toluene.

11.1.9 Decant remaining supernatant into a hydrocarbon waste sink, being careful not to discard any of the polymer. Place bottle of precipitate into the steam oven and dry for six hours—Some grades of Vistalon produce very small particles in the precipitate, thus making complete decanting impossible without discarding some polymer. In this case, decant as much as possible and put into the oven as is, allowing the oven to drive off remaining supernatant (this practice is avoided for environmental reasons). WARNING: OVEN IS HOT—110 °C (230 °F).

11.1.10 Cool, weigh and record final weight of bottle.

11.2 GC ANALYSIS

11.2.1 Initiate the CALS computer channel.

11.2.2 Enter the correct instrument method into the GC's integrator.

11.2.3 Load sample vial(s) into autosampler.

11.2.4 Start the integrator.

11.2.5 When analysis is complete, plot CALS run to check baseline skim.

12.0 Data Analysis and Calculations

12.1 Add the concentrations of the hexane peaks as they appear on the CALS printout. Do not include the benzene peak in the sum.

12.2 Subtract any hexane interferences found in the PDS (see section 7.5.6 of this method); record the result.

12.3 Note the termonomer concentration on the CALS printout. Subtract any termonomer interference found in the PDS and record this result in a ''% termonomer by GC'' column in a logbook.

12.4 Record the area (from CALS printout) of the heptane internal standard peak in a ''C7 area'' column in the logbook. This helps track instrument performance over the long term.

12.5 After obtaining the final dry weight of polymer used (Section 11.1.10 of this method), record that result in a ''dry wt.'' column of the logbook (for oil extended polymer, the amount of oil extracted is added to the dry rubber weight).

12.6 Divide the %C6 by the dry weight to obtain the total PHR hexane in crumb. Similarly, divide the % termonomer by the dry weight to obtain the total PHR termonomer in crumb. Note that PHR is an abbreviation for ''parts per hundred''. Record both the hexane and termonomer results in the logbook.

12.7 Correct all results by the recovery efficiency value (R).

13.0 Method Performance

13.1 The method has been shown to provide 100% recovery of the hexane analyte. The method was found to give a 6% relative standard deviation when the same six portions of the same sample were carried through the procedure. Note: These values are examples; each sample type, as specified in Section 9.3, must be tested for sample recovery.

14.0 Pollution Prevention

14.1 Dispose of all hydrocarbon liquids in the appropriate disposal sink system; never pour hydrocarbons down a water sink.

14.2 As discussed in section 11.1.9 of this method, the analyst can minimize venting hydrocarbon vapor to the atmosphere by decanting as much hydrocarbon liquid as possible before oven drying.

15.0 Waste Mamagement

15.1 The Technician conducting the analysis should follow the proper waste management practices for their laboratory location.

16.0 References

16.1 Baton Rouge Chemical Plant Analytical Procedure no. BRCP 1302

16.2 Material Safety Data Sheets (from chemical vendors) for hexane, ENB, toluene, acetone, and heptane

METHOD 310C—DETERMINATION OF RESIDUAL N-HEXANE IN EPDM RUBBER THROUGH GAS CHROMATOGRAPHY

1.0 Scope and Application

1.1 This method describes a procedure for the determination of residual hexane in EPDM wet crumb rubber in the 0.01—2% range by solvent extraction of the hexane followed by gas chromatographic analysis where the hexane is detected by flame ionization and quantified via an internal standard.

1.2 This method may involve hazardous materials operations and equipment. This method does not purport to address all the safety problems associated with it use, if any. It is the responsibility of the user to consult and establish appropriate safety and health practices and determine the applicability of regulatory limitations prior to use.

2.0 Summary

2.1 Residual hexane contained in wet pieces of EPDM polymer is extracted with MIBK. A known amount of an internal standard (IS) is added to the extract which is subsequently analyzed via gas chromatography where the hexane and IS are separated and detected utilizing a megabore column and flame ionization detection (FID). From the response to the hexane and the IS, the amount of hexane in the EPDM polymer is calculated.

3.0 Definitions

3.1 Hexane—refers to n-hexane
3.2 Heptane—refers to n-heptane
3.3 MIBK—methyl isobutyl ketone (4 methyl 2—Pentanone)

4.0 Interferences

4.1 Material eluting at or near the hexane and/or the IS will cause erroneous results. Prior to extraction, solvent blanks must be analyzed to confirm the absence of interfering peaks.

5.0 Safety

5.1 Review Material Safety Data Sheets of the chemicals used in this method.

6.0 Equipment and Supplies

6.1 4 oz round glass jar with a wide mouth screw cap lid.
6.2 Vacuum oven.
6.3 50 ml pipettes.
6.4 A gas chromatograph with an auto sampler and a 50 meter, 0.53 ID, methyl silicone column with 5 micron phase thickness.
6.5 Shaker, large enough to hold 10, 4 oz. jars.
6.6 1000 and 4000 ml volumetric flasks.
6.7 Electronic integrator or equivalent data system.
6.8 GC autosampler vials.
6.9 50 uL syringe.

7.0 Reagents and Standards

7.1 Reagent grade Methyl-Iso-Butyl-Ketone (MIBK)
7.2 n-heptane, 99% + purity
7.3 n-hexane, 99% + purity

8.0 Sample Collection

8.1 Trap a sample of the EPDM crumb slurry in the sampling apparatus. Allow the crumb slurry to circulate through the sampling apparatus for 5 minutes; then close off the values at the bottom and top of the sampling apparatus, trapping the crumb slurry. Run cooling water through the water jacket for a minimum of 30 minutes. Expel the cooled crumb slurry into a sample catching basket. If the crumb does not fall by gravity, force it out with demineralized water or nitrogen. Send the crumb slurry to the lab for analysis.

9.0 Quality Control

9.1 The Royalene crumb sample is extracted three times with MIBK containing an internal standard. The hexane from each extraction is added together to obtain a total hexane content. The percent hexane in the first extraction is then calculated and used as the recovery factor for the analysis.

9.2 Follow this test method through section 11.4 of the method. After removing the sample of the first extraction to be run on the gas chromatograph, drain off the remainder of the extraction solvent, retaining the crumb sample in the sample jar. Rinse the crumb with demineralized water to remove any MIBK left on the surface of the crumb. Repeat the extraction procedure with fresh MIBK with internal standard two more times.

9.3 After the third extraction, proceed to section 11.5 of this method and obtain the percent hexane in each extraction. Use the sample weight obtained in section 12.1 of this method to calculate the percent hexane in each of the extracts.

9.4 Add the percent hexane obtained from the three extractions for a total percent hexane in the sample.

9.5 Use the following equations to determine the recovery factor (R):

% Recovery of the first extraction=(% hexane in the first extract/total % hexane)×100

Recovery Factor (R)=(% Hexane Recovered in the first extract)/100

10.0 Calibration

10.1 Preparation of Internal Standard (IS) solution:

Accuracy weigh 30 grams of n-heptane into a 1000 ml volumetric flask. Dilute to the mark with reagent grade MIBK. Label this Solution ''A''. Pipette 100 mls. of Solution A into a 4 liter volumetric flask. Fill the flask to the mark with reagent MIBK. Label this Solution ''B''. Solution ''B'' will have a concentration of 0.75 mg/ml of heptane.

10.2 Preparation of Hexane Standard Solution (HS):

Using a 50 uL syringe, weigh by difference, 20 mg of n-hexane into a 50 ml volumetric flask containing approximately 40 ml of Solution B. Fill the flask to the mark with Solution B and mix well.

10.3 Conditions for GC analysis of standards and samples:

Temperature:
Initial=40 °C
Final=150 °C
Injector=160 °C
Detector=280 °C
Program Rate=5.0 °C/min

Initial Time=5 minutes Final Time=6 minutes

Flow Rate=5.0 ml/min

Sensitivity=detector response must be adjusted to keep the hexane and IS on scale.

10.4 Fill an autosampler vial with the HS, analyze it three times and calculate a Hexane Relative Response Factor (RF) as follows:

$$RF=(A_{IS} \times C_{HS} \times P_{HS})/(A_{HS} \times C_{IS} \times P_{IS}) \quad (1)$$

Where:

A_{IS}=Area of IS peak (Heptane)

A_{HS}=Area of peak (Hexane Standard)

C_{HS}=Mg of Hexane/50 ml HS

C_{IS}=Mg of Heptane/50 ml IS Solution B

P_{IS}=Purity of the IS n-heptane

P_{HS}=Purity of the HS n-hexane

11.0 Procedure

11.1 Weight 10 grams of wet crumb into a tared (W1), wide mouth 4 oz. jar.

11.2 Pipette 50 ml of Solution B into the jar with the wet crumb rubber.

11.3 Screw the cap on tightly and place it on a shaker for 4 hours.

11.4 Remove the sample from the shaker and fill an autosampler vial with the MIBK extract.

11.5 Analyze the sample two times.

11.6 Analyze the HS twice, followed by the samples. Inject the HS twice at the end of each 10 samples or at the end of the run.

12.0 Calculations

12.1 Drain off the remainder of the MIBK extract from the polymer in the 4 oz. jar. Retain all the polymer in the jar. Place the uncovered jar and polymer in a heated vacuum oven until the polymer is dry. Reweigh the jar and polymer (W2) and calculate the dried sample weight of the polymer as follows:

$$\text{Dried SW}=W2—W1 \quad (2)$$

12.2 Should the polymer be oil extended, pipette 10 ml of the MIBK extract into a tared evaporating dish (W1) and evaporate to dryness on a steam plate.

Reweigh the evaporating dish containing the extracted oil (W2). Calculate the oil content of the polymer as follows:

$$\text{Gram of oil extracted} = 5\ (W2—W1) \quad (3)$$

$$\%\ \text{Hexane in polymer}=(A_s \text{ X } RF \text{ X } C_{IS} \text{ X } P_{IS})/(A_{IS} \text{ X } SW) \quad (4)$$

Where:

A_s=Area of sample hexane sample peak.

A_{IS}=Area of IS peak in sample.

C_{IS}=Concentration of IS in 50 ml.

P_{IS}=Purity of IS.

SW=Weight of dried rubber after extraction. (For oil extended polymer, the amount of oil extracted is added to the dry rubber weight).

% Corrected Hexane=(% Hexane in Polymer)/R (5)

R=Recovery factor determined in section 9 of this method.

13.0 Method Performance

13.1 Performance must be determined for each sample type by following the procedures in section 9 of this method.

14.0 Waste Generation

14.1 Waste generation should be minimized where possible.

15.0 Waste Management

15.1 All waste shall be handled in accordance with Federal and State environmental regulations.

16.0 References. [Reserved]

METHOD 311—ANALYSIS OF HAZARDOUS AIR POLLUTANT COMPOUNDS IN PAINTS AND COATINGS BY DIRECT INJECTION INTO A GAS CHROMATOGRAPH

1. Scope and Application

1.1 Applicability. This method is applicable for determination of most compounds designated by the U.S. Environmental Protection Agency as volatile hazardous air pollutants (HAP's) (See Reference 1) that are contained in paints and coatings. Styrene, ethyl acrylate, and methyl methacrylate can be measured by ASTM D 4827–93 or ASTM D 4747–87. Formaldehyde can be measured by ASTM PS 9–94 or ASTM D 1979–91. Toluene diisocyanate can be measured in urethane prepolymers by ASTM D 3432–89. Method 311 applies only to those volatile HAP's which are added to the coating when it is manufactured, not to those which may form as the coating cures (reaction products or cure volatiles). A separate or modified test procedure must be used to measure these reaction products or cure volatiles in order to determine the total volatile HAP emissions from a coating. Cure volatiles are a significant component of the total HAP content of some coatings. The term ''coating'' used in this method shall be understood to mean paints and coatings.

1.2 Principle. The method uses the principle of gas chromatographic separation and quantification using a detector that responds to concentration differences. Because there are many potential analytical systems or sets of operating conditions that may represent useable methods for determining the concentrations of the compounds cited in Section 1.1 in the applicable matrices, all systems that employ this principle, but differ only in details of equipment and operation, may be used as alternative methods, provided that the prescribed quality control, calibration, and method performance requirements are met. Certified product data sheets (CPDS) may also include information relevant to the analysis of the coating sample including, but not limited to, separation

column, oven temperature, carrier gas, injection port temperature, extraction solvent, and internal standard.

2. Summary of Method

Whole coating is added to dimethylformamide and a suitable internal standard compound is added. An aliquot of the sample mixture is injected onto a chromatographic column containing a stationary phase that separates the analytes from each other and from other volatile compounds contained in the sample. The concentrations of the analytes are determined by comparing the detector responses for the sample to the responses obtained using known concentrations of the analytes.

3. Definitions. [Reserved]

4. Interferences

4.1 Coating samples of unknown composition may contain the compound used as the internal standard. Whether or not this is the case may be determined by following the procedures of Section 11 and deleting the addition of the internal standard specified in Section 11.5.3. If necessary, a different internal standard may be used.

4.2 The GC column and operating conditions developed for one coating formulation may not ensure adequate resolution of target analytes for other coating formulations. Some formulations may contain nontarget analytes that coelute with target analytes. If there is any doubt about the identification or resolution of any gas chromatograph (GC) peak, it may be necessary to analyze the sample using a different GC column or different GC operating conditions.

4.3 Cross-contamination may occur whenever high-level and low-level samples are analyzed sequentially. The order of sample analyses specified in Section 11.7 is designed to minimize this problem.

4.4 Cross-contamination may also occur if the devices used to transfer coating during the sample preparation process or for injecting the sample into the GC are not adequately cleaned between uses. All such devices should be cleaned with acetone or other suitable solvent and checked for plugs or cracks before and after each use.

5. Safety

5.1 Many solvents used in coatings are hazardous. Precautions should be taken to avoid unnecessary inhalation and skin or eye contact. This method may involve hazardous materials, operations, and equipment. This test method does not purport to address all of the safety problems associated with its use. It is the responsibility of the user of this test method to establish appropriate safety and health practices and to determine the applicability of regulatory limitations in regards to the performance of this test method.

5.2 Dimethylformamide is harmful if inhaled or absorbed through the skin. The user should obtain relevant health and safety information from the manufacturer. Dimethylformamide should be used only with adequate ventilation. Avoid contact with skin, eyes, and clothing. In case of contact, immediately flush skin or eyes with plenty of water for at least 15 minutes. If eyes are affected, consult a physician. Remove and wash contaminated clothing before reuse.

5.3 User's manuals for the gas chromatograph and other related equipment should be consulted for specific precautions to be taken related to their use.

6. Equipment and Supplies

NOTE: Certified product data sheets (CPDS) may also include information relevant to the analysis of the coating sample including, but not limited to, separation column, oven temperature, carrier gas, injection port temperature, extraction solvent, and internal standard.

6.1 Sample Collection.

6.1.1 Sampling Containers. Dual-seal sampling containers, four to eight fluid ounce capacity, should be used to collect the samples. Glass sample bottles or plastic containers with volatile organic compound (VOC) impermeable walls must be used for corrosive substances (*e.g.*, etch primers and certain coating catalysts such as methyl ethyl ketone (MEK) peroxide). Sample containers, caps, and inner seal liners must be inert to the compounds in the sample and must be selected on a case-by-case basis.

6.1.1.1 Other routine sampling supplies needed include waterproof marking pens, tubing, scrappers/spatulas, clean rags, paper towels, cooler/ice, long handle tongs, and mixing/stirring paddles.

6.1.2 Personal safety equipment needed includes eye protection, respiratory protection, a hard hat, gloves, steel toe shoes, etc.

6.1.3 Shipping supplies needed include shipping boxes, packing material, shipping labels, strapping tape, etc.

6.1.4 Data recording forms and labels needed include coating data sheets and sample can labels.

NOTE: The actual requirements will depend upon the conditions existing at the source sampled.

6.2 Laboratory Equipment and Supplies.

6.2.1 Gas Chromatograph (GC). Any instrument equipped with a flame ionization detector and capable of being temperature programmed may be used. Optionally, other types of detectors (e.g., a mass spectrometer), and any necessary interfaces, may be used provided that the detector system

yields an appropriate and reproducible response to the analytes in the injected sample. Autosampler injection may be used, if available.

6.2.2 Recorder. If available, an electronic data station or integrator may be used to record the gas chromatogram and associated data. If a strip chart recorder is used, it must meet the following criteria: A 1 to 10 millivolt (mV) linear response with a full scale response time of 2 seconds or less and a maximum noise level of ±0.03 percent of full scale. Other types of recorders may be used as appropriate to the specific detector installed provided that the recorder has a full scale response time of 2 seconds or less and a maximum noise level of ±0.03 percent of full scale.

6.2.3 Column. The column must be constructed of materials that do not react with components of the sample (*e.g.*, fused silica, stainless steel, glass). The column should be of appropriate physical dimensions (*e.g.*, length, internal diameter) and contain sufficient suitable stationary phase to allow separation of the analytes. DB–5, DB-Wax, and FFAP columns are commonly used for paint analysis; however, it is the responsibility of each analyst to select appropriate columns and stationary phases.

6.2.4 Tube and Tube Fittings. Supplies to connect the GC and gas cylinders.

6.2.5 Pressure Regulators. Devices used to regulate the pressure between gas cylinders and the GC.

6.2.6 Flow Meter. A device used to determine the carrier gas flow rate through the GC. Either a digital flow meter or a soap film bubble meter may be used to measure gas flow rates.

6.2.7 Septa. Seals on the GC injection port through which liquid or gas samples can be injected using a syringe.

6.2.8 Liquid Charging Devices. Devices used to inject samples into the GC such as clean and graduated 1, 5, and 10 microliter (µl) capacity syringes.

6.2.9 Vials. Containers that can be sealed with a septum in which samples may be prepared or stored. The recommended size is 25 ml capacity. Mininert® valves have been found satisfactory and are available from Pierce Chemical Company, Rockford, Illinois.

6.2.10 Balance. Device used to determine the weights of standards and samples. An analytical balance capable of accurately weighing to 0.0001 g is required.

7. Reagents and Standards

7.1 Purity of Reagents. Reagent grade chemicals shall be used in all tests. Unless otherwise specified, all reagents shall conform to the specifications of the Committee on Analytical Reagents of the American Chemical Society, where such specifications are available. Other grades may be used provided it is first ascertained that the reagent is of sufficient purity to permit its use without lessening the accuracy of determination.

7.2 Carrier Gas. Helium carrier gas shall have a purity of 99.995 percent or higher. High purity nitrogen may also be used. Other carrier gases that are appropriate for the column system and analyte may also be used. Ultra-high purity grade hydrogen gas and zero-grade air shall be used for the flame ionization detector.

7.3 Dimethylformamide (DMF). Solvent for all standards and samples. Some other suitable solvent may be used if DMF is not compatible with the sample or coelutes with a target analyte.

NOTE: DMF may coelute with ethylbenzene or p-xylene under the conditions described in the note under Section 6.2.3.

7.4 Internal Standard Materials. The internal standard material is used in the quantitation of the analytes for this method. It shall be gas chromatography spectrophotometric quality or, if this grade is not available, the highest quality available. Obtain the assay for the internal standard material and maintain at that purity during use. The recommended internal standard material is 1-propanol; however, selection of an appropriate internal standard material for the particular coating and GC conditions used is the responsibility of each analyst.

7.5 Reference Standard Materials. The reference standard materials are the chemicals cited in Section 1.1 which are of known identity and purity and which are used to assist in the identification and quantification of the analytes of this method. They shall be the highest quality available. Obtain the assays for the reference standard materials and maintain at those purities during use.

7.6 Stock Reference Standards. Stock reference standards are dilutions of the reference standard materials that may be used on a daily basis to prepare calibration standards, calibration check standards, and quality control check standards. Stock reference standards may be prepared from the reference standard materials or purchased as certified solutions.

7.6.1 Stock reference standards should be prepared in dimethylformamide for each analyte expected in the coating samples to be analyzed. The concentrations of analytes in the stock reference standards are not specified but must be adequate to prepare the calibration standards required in the method. A stock reference standard may contain more than one analyte provided all analytes are chemically compatible and no analytes coelute. The actual concentrations prepared must be known to within 0.1 percent (e.g., 0.1000 ± 0.0001 g/g solution). The following procedure is suggested. Place about 35 ml of dimethylformamide into a

tared ground-glass stoppered 50 ml volumetric flask. Weigh the flask to the nearest 0.1 mg. Add 12.5 g of the reference standard material and reweigh the flask. Dilute to volume with dimethylformamide and reweigh. Stopper the flask and mix the contents by inverting the flask several times. Calculate the concentration in grams per gram of solution from the net gain in weights, correcting for the assayed purity of the reference standard material.

NOTE: Although a glass-stoppered volumetric flask is convenient, any suitable glass container may be used because stock reference standards are prepared by weight.

7.6.2 Transfer the stock reference standard solution into one or more Teflon-sealed screw-cap bottles. Store, with minimal headspace, at −10 °C to 0 °C and protect from light.

7.6.3 Prepare fresh stock reference standards every six months, or sooner if analysis results from daily calibration check standards indicate a problem. Fresh stock reference standards for very volatile HAP's may have to be prepared more frequently.

7.7 Calibration Standards. Calibration standards are used to determine the response of the detector to known amounts of reference material. Calibration standards must be prepared at a minimum of three concentration levels from the stock reference standards (see Section 7.6). Prepare the calibration standards in dimethylformamide (see Section 7.3). The lowest concentration standard should contain a concentration of analyte equivalent either to a concentration of no more than 0.01% of the analyte in a coating or to a concentration that is lower than the actual concentration of the analyte in the coating, whichever concentration is higher. The highest concentration standard should contain a concentration of analyte equivalent to slightly more than the highest concentration expected for the analyte in a coating. The remaining calibration standard should contain a concentration of analyte roughly at the midpoint of the range defined by the lowest and highest concentration calibration standards. The concentration range of the standards should thus correspond to the expected range of analyte concentrations in the prepared coating samples (see Section 11.5). Each calibration standard should contain each analyte for detection by this method expected in the actual coating samples (e.g., some or all of the compounds listed in Section 1.1 may be included). Each calibration standard should also contain an appropriate amount of internal standard material (response for the internal standard material is within 25 to 75 percent of full scale on the attenuation setting for the particular reference standard concentration level). Calibration Standards should be stored for 1 week only in sealed vials with minimal headspace. If the stock reference standards were prepared as specified in Section 7.6, the calibration standards may be prepared by either weighing each addition of the stock reference standard or by adding known volumes of the stock reference standard and calculating the mass of the standard reference material added. Alternative 1 (Section 7.7.1) specifies the procedure to be followed when the stock reference standard is added by volume. Alternative 2 (Section 7.7.2) specifies the procedure to be followed when the stock reference standard is added by weight.

NOTE: To assist with determining the appropriate amount of internal standard to add, as required here and in other sections of this method, the analyst may find it advantageous to prepare a curve showing the area response versus the amount of internal standard injected into the GC.

7.7.1 Preparation Alternative 1. Determine the amount of each stock reference standard and dimethylformamide solvent needed to prepare approximately 25 ml of the specific calibration concentration level desired. To a tared 25 ml vial that can be sealed with a crimp-on or Mininert® valve, add the total amount of dimethylformamide calculated to be needed. As quickly as practical, add the calculated amount of each stock reference standard using new pipets (or pipet tips) for each stock reference standard. Reweigh the vial and seal it. Using the known weights of the standard reference materials per ml in the stock reference standards, the volumes added, and the total weight of all reagents added to the vial, calculate the weight percent of each standard reference material in the calibration standard prepared. Repeat this process for each calibration standard to be prepared.

7.7.2 Preparation Alternative 2. Determine the amount of each stock reference standard and dimethylformamide solvent needed to prepare approximately 25 ml of the specific calibration concentration level desired. To a tared 25 ml vial that can be sealed with a crimp-on or Mininert® valve, add the total amount of dimethylformamide calculated to be needed. As quickly as practical, add the calculated amount of a stock reference standard using a new pipet (or pipet tip) and reweigh the vial. Repeat this process for each stock reference standard to be added. Seal the vial after obtaining the final weight. Using the known weight percents of the standard reference materials in the stock reference standards, the weights of the stock reference standards added, and the total weight of all reagents added to the vial, calculate the weight percent of each standard reference material in the calibration standard prepared. Repeat this process for each calibration standard to be prepared.

8. Sample Collection, Preservation, Transport, and Storage

8.1 Copies of material safety data sheets (MSDS's) for each sample should be obtained prior to sampling. The MSDS's contain information on the ingredients, and physical and chemical properties data. The MSDS's also contain recommendations for proper handling or required safety precautions. Certified product data sheets (CPDS) may also include information relevant to the analysis of the coating sample including, but not limited to, separation column, oven temperature, carrier gas, injection port temperature, extraction solvent, and internal standard.

8.2 A copy of the blender's worksheet can be requested to obtain data on the exact coating being sampled. A blank coating data sheet form (see Section 18) may also be used. The manufacturer's formulation information from the product data sheet should also be obtained.

8.3 Prior to sample collection, thoroughly mix the coating to ensure that a representative, homogeneous sample is obtained. It is preferred that this be accomplished using a coating can shaker or similar device; however, when necessary, this may be accomplished using mechanical agitation or circulation systems.

8.3.1 Water-thinned coatings tend to incorporate or entrain air bubbles if stirred too vigorously; mix these types of coatings slowly and only as long as necessary to homogenize.

8.3.2 Each component of multicomponent coatings that harden when mixed must be sampled separately. The component mix ratios must be obtained at the facility at the time of sampling and submitted to the analytical laboratory.

8.4 Sample Collection. Samples must be collected in a manner that prevents or minimizes loss of volatile components and that does not contaminate the coating reservoir. A suggested procedure is as follows. Select a sample collection container which has a capacity at least 25 percent greater than the container in which the sample is to be transported. Make sure both sample containers are clean and dry. Using clean, long-handled tongs, turn the sample collection container upside down and lower it into the coating reservoir. The mouth of the sample collection container should be at approximately the midpoint of the reservoir (do not take the sample from the top surface). Turn the sample collection container over and slowly bring it to the top of the coating reservoir. Rapidly pour the collected coating into the sample container, filling it completely. It is important to fill the sample container completely to avoid any loss of volatiles due to volatilization into the headspace. Return any unused coating to the reservoir or dispose as appropriate.

NOTE: If a company requests a set of samples for its own analysis, a separate set of samples, using new sample containers, should be taken at the same time.

8.5 Once the sample is collected, place the sample container on a firm surface and insert the inner seal in the container by placing the seal inside the rim of the container, inverting a screw cap, and pressing down on the screw cap which will evenly force the inner seal into the container for a tight fit. Using clean towels or rags, remove all residual coating material from the outside of the sample container after inserting the inner seal. Screw the cap onto the container.

8.5.1 Affix a sample label (see Section 18) clearly identifying the sample, date collected, and person collecting the sample.

8.5.2 Prepare the sample for transportation to the laboratory. The sample should be maintained at the coating's recommended storage temperature specified on the Material Safety Data Sheet, or, if no temperature is specified, the sample should be maintained within the range of 5 °C to 38 °C.

8.9 The shipping container should adhere to U.S. Department of Transportation specification DOT 12–B. Coating samples are considered hazardous materials; appropriate shipping procedures should be followed.

9. Quality Control

9.1 Laboratories using this method should operate a formal quality control program. The minimum requirements of the program should consist of an initial demonstration of laboratory capability and an ongoing analysis of blanks and quality control samples to evaluate and document quality data. The laboratory must maintain records to document the quality of the data generated. When results indicate atypical method performance, a quality control check standard (see Section 9.4) must be analyzed to confirm that the measurements were performed in an in-control mode of operation.

9.2 Before processing any samples, the analyst must demonstrate, through analysis of a reagent blank, that there are no interferences from the analytical system, glassware, and reagents that would bias the sample analysis results. Each time a set of analytical samples is processed or there is a change in reagents, a reagent blank should be processed as a safeguard against chronic laboratory contamination. The blank samples should be carried through all stages of the sample preparation and measurement steps.

9.3 Required instrument quality control parameters are found in the following sections:

9.3.1 Baseline stability must be demonstrated to be ≤5 percent of full scale using the procedures given in Section 10.1.

9.3.2 The GC calibration is not valid unless the retention time (RT) for each analyte at each concentration is within ±0.05 min of the retention time measured for that analyte in the stock standard.

9.3.3 The retention time (RT) of any sample analyte must be within ±0.05 min of the average RT of the analyte in the calibration standards for the analyte to be considered tentatively identified.

9.3.4 The GC system must be calibrated as specified in Section 10.2.

9.3.5 A one-point daily calibration check must be performed as specified in Section 10.3.

9.4 To establish the ability to generate results having acceptable accuracy and precision, the analyst must perform the following operations.

9.4.1 Prepare a quality control check standard (QCCS) containing each analyte expected in the coating samples at a concentration expected to result in a response between 25 percent and 75 percent of the limits of the calibration curve when the sample is prepared as described in Section 11.5. The QCCS may be prepared from reference standard materials or purchased as certified solutions. If prepared in the laboratory, the QCCS must be prepared independently from the calibration standards.

9.4.2 Analyze three aliquots of the QCCS according to the method beginning in Section 11.5.3 and calculate the weight percent of each analyte using Equation 1, Section 12.

9.4.3 Calculate the mean weight percent ($\bar{X}$) for each analyte from the three results obtained in Section 9.4.2.

9.4.4 Calculate the percent accuracy for each analyte using the known concentrations (Ti) in the QCCS using Equation 3, Section 12.

9.4.5 Calculate the percent relative standard deviation (percent RSD) for each analyte using Equation 7, Section 12, substituting the appropriate values for the relative response factors (RRF's) in said equation.

9.4.6 If the percent accuracy (Section 9.4.4) for all analytes is within the range 90 percent to 110 percent and the percent RSD (Section 9.4.5) for all analytes is ≤20 percent, system performance is acceptable and sample analysis may begin. If these criteria are not met for any analyte, then system performance is not acceptable for that analyte and the test must be repeated for those analytes only. Repeated failures indicate a general problem with the measurement system that must be located and corrected. In this case, the entire test, beginning at Section 9.4.1, must be repeated after the problem is corrected.

9.5 Great care must be exercised to maintain the integrity of all standards. It is recommended that all standards be stored at −10 °C to 0 °C in screw-cap amber glass bottles with Teflon liners.

9.6 Unless otherwise specified, all weights are to be recorded within 0.1 mg.

10. Calibration and Standardization.

10.1 Column Baseline Drift. Before each calibration and series of determinations and before the daily calibration check, condition the column using procedures developed by the laboratory or as specified by the column supplier. Operate the GC at initial (i.e., before sample injection) conditions on the lowest attenuation to be used during sample analysis. Adjust the recorder pen to zero on the chart and obtain a baseline for at least one minute. Initiate the GC operating cycle that would be used for sample analysis. On the recorder chart, mark the pen position at the end of the simulated sample analysis cycle. Baseline drift is defined as the absolute difference in the pen positions at the beginning and end of the cycle in the direction perpendicular to the chart movement. Calculate the percent baseline drift by dividing the baseline drift by the chart width representing full-scale deflection and multiply the result by 100.

10.2 Calibration of GC. Bring all stock standards and calibration standards to room temperature while establishing the GC at the determined operating conditions.

10.2.1 Retention Times (RT's) for Individual Compounds.

NOTE: The procedures of this subsection are required only for the initial calibration. However, it is good laboratory practice to follow these procedures for some or all analytes before each calibration. The procedures were written for chromatograms output to a strip chart recorder. More modern instruments (e.g., integrators and electronic data stations) determine and print out or display retention times automatically.

The RT for each analyte should be determined before calibration. This provides a positive identification for each peak observed from the calibration standards. Inject an appropriate volume (see NOTE in Section 11.5.2) of one of the stock reference standards into the gas chromatograph and record on the chart the pen position at the time of the injection (see Section 7.6.1). Dilute an aliquot of the stock reference standard as required in dimethylformamide to achieve a concentration that will result in an on-scale response. Operate the gas chromatograph according to the determined procedures. Select the peak(s) that correspond to the analyte(s) [and internal standard, if used] and measure the retention time(s). If a chart recorder is used, measure the distance(s) on the chart from the injection point to the peak maxima. These distances, divided by the chart speed, are defined as the RT's of the analytes in question. Repeat this process for each of the stock reference standard solutions.

NOTE: If gas chromatography with mass spectrometer detection (GC–MS) is used, a stock reference standard may contain a group of analytes, provided all analytes are adequately separated during the analysis. Mass spectral library matching can be used to identify the analyte associated with each peak in the gas chromatogram. The retention time for the analyte then becomes the retention time of its peak in the chromatogram.

10.2.2 Calibration. The GC must be calibrated using a minimum of three concentration levels of each potential analyte. (See Section 7.7 for instructions on preparation of the calibration standards.) Beginning with the lowest concentration level calibration standard, carry out the analysis procedure as described beginning in Section 11.7. Repeat the procedure for each progressively higher concentration level until all calibration standards have been analyzed.

10.2.2.1 Calculate the RT's for the internal standard and for each analyte in the calibration standards at each concentration level as described in Section 10.2.1. The RT's for the internal standard must not vary by more than 0.10 minutes. Identify each analyte by comparison of the RT's for peak maxima to the RT's determined in Section 10.2.1.

10.2.2.2 Compare the retention times (RT's) for each potential analyte in the calibration standards for each concentration level to the retention times determined in Section 10.2.1. The calibration is not valid unless all RT's for all analytes meet the criteria given in Section 9.3.2.

10.2.2.3 Tabulate the area responses and the concentrations for the internal standard and each analyte in the calibration standards. Calculate the response factor for the internal standard (RF_{is}) and the response factor for each compound relative to the internal standard (RRF) for each concentration level using Equations 5 and 6, Section 12.

10.2.2.4 Using the RRF's from the calibration, calculate the percent relative standard deviation (percent RSD) for each analyte in the calibration standard using Equation 7, Section 12. The percent RSD for each individual calibration analyte must be *less* than 15 percent. This criterion must be met in order for the calibration to be valid. If the criterion is met, the mean RRF's determined above are to be used until the next calibration.

10.3 Daily Calibration Checks. The calibration curve (Section 10.2.2) must be checked and verified at least once each day that samples are analyzed. This is accomplished by analyzing a calibration standard that is at a concentration near the midpoint of the working range and performing the checks in Sections 10.3.1, 10.3.2, and 10.3.3.

10.3.1 For each analyte in the calibration standard, calculate the percent difference in the RRF from the last calibration using Equation 8, Section 12. If the percent difference for each calibration analyte is less than 10 percent, the last calibration curve is assumed to be valid. If the percent difference for any analyte is greater than 5 percent, the analyst should consider this a warning limit. If the percent difference for any one calibration analyte exceeds 10 percent, corrective action must be taken. If no source of the problem can be determined after corrective action has been taken, a new three-point (minimum) calibration must be generated. This criterion must be met before quantitative analysis begins.

10.3.2 If the RF_{is} for the internal standard changes by more than ±20 percent from the last daily calibration check, the system must be inspected for malfunctions and corrections made as appropriate.

10.3.3 The retention times for the internal standard and all calibration check analytes must be evaluated. If the retention time for the internal standard or for any calibration check analyte changes by more than 0.10 min from the last calibration, the system must be inspected for malfunctions and corrections made as required.

11. Procedure

11.1 All samples and standards must be allowed to warm to room temperature before analysis. Observe the given order of ingredient addition to minimize loss of volatiles.

11.2 Bring the GC system to the determined operating conditions and condition the column as described in Section 10.1.

NOTE: The temperature of the injection port may be an especially critical parameter.Information about the proper temperature may be found on the CPDS.

11.3 Perform the daily calibration checks as described in Section 10.3. Samples are not to be analyzed until the criteria in Section 10.3 are met.

11.4 Place the as-received coating sample on a paint shaker, or similar device, and shake the sample for a minimum of 5 minutes to achieve homogenization.

11.5 NOTE: The steps in this section must be performed rapidly and without interruption to avoid loss of volatile organics. These steps must be performed in a laboratory hood free from solvent vapors. All weights must be recorded to the nearest 0.1 mg.

11.5.1 Add 16 g of dimethylformamide to each of two tared vials (A and B) capable of being septum sealed.

11.5.2 To each vial add a weight of coating that will result in the response for the major constituent being in the upper half of the linear range of the calibration curve.

NOTE: The magnitude of the response obviously depends on the amount of sample injected into the GC as specified in Section 11.8. This volume must be the same as used

for preparation of the calibration curve, otherwise shifts in compound retention times may occur. If a sample is prepared that results in a response outside the limits of the calibration curve, new samples must be prepared; changing the volume injected to bring the response within the calibration curve limits is not permitted.

11.5.3 Add a weight of internal standard to each vial (A and B) that will result in the response for the internal standard being between 25 percent and 75 percent of the linear range of the calibration curve.

11.5.4 Seal the vials with crimp-on or Mininert® septum seals.

11.6 Shake the vials containing the prepared coating samples for 60 seconds. Allow the vials to stand undisturbed for ten minutes. If solids have not settled out on the bottom after 10 minutes, then centrifuge at 1,000 rpm for 5 minutes. The analyst also has the option of injecting the sample without allowing the solids to settle.

11.7 Analyses should be conducted in the following order: daily calibration check sample, method blank, up to 10 injections from sample vials (*i.e.*, one injection each from up to five pairs of vials, which corresponds to analysis of 5 coating samples).

11.8 Inject the prescribed volume of supernatant from the calibration check sample, the method blank, and the sample vials onto the chromatographic column and record the chromatograms while operating the system under the specified operating conditions.

NOTE: The analyst has the option of injecting the unseparated sample.

12. Data Analysis and Calculations

12.1 Qualitative Analysis. An analyte (e.g., those cited in Section 1.1) is considered tentatively identified if two criteria are satisfied: (1) elution of the sample analyte within ±0.05 min of the average GC retention time of the same analyte in the calibration standard; and (2) either (a) confirmation of the identity of the compound by spectral matching on a gas chromatograph equipped with a mass selective detector or (b) elution of the sample analyte within ±0.05 min of the average GC retention time of the same analyte in the calibration standard analyzed on a dissimilar GC column.

12.1.1 The RT of the sample analyte must meet the criteria specified in Section 9.3.3.

12.1.2 When doubt exists as to the identification of a peak or the resolution of two or more components possibly comprising one peak, additional confirmatory techniques (listed in Section 12.1) must be used.

12.2 Quantitative Analysis. When an analyte has been identified, the quantification of that compound will be based on the internal standard technique.

12.2.1 A single analysis consists of one injection from each of two sample vials (A and B) prepared using the same coating. Calculate the concentration of each identified analyte in the sample as follows:

$$HAP_{wt\%} = 100 \times \frac{(A_x)(W_{is})}{(A_{is})(\overline{RRF_x})(W_x)} \qquad \text{Eq. (1)}$$

where:

$HAP_{wt\%}$ = weight percent of the analyte in coating.
A_x = Area response of the analyte in the sample.
W_{is} = Weight of internal standard added to sample, g.
A_{is} = Area response of the internal standard in the sample.
$\overline{RRF_x}$ = Mean relative response factor for the analyte in the calibration standards.
W_x = Weight of coating added to the sample solution, g.

12.2.2 Report results for duplicate analysis (sample vials A and B) without correction.

12.3 Precision Data. Calculate the percent difference between the measured concentrations of each analyte in vials A and B as follows.

12.3.1 Calculate the weight percent of the analyte in each of the two sample vials as described in Section 12.2.1.

12.3.2 Calculate the percent difference for each analyte as:

$$\%Dif_i = 100 \times \frac{|A_i - B_i|}{\frac{(A_i + B_i)}{2}} \qquad \text{Eq. (2)}$$

where A_i and B_i are the measured concentrations of the analyte in vials A and B.

12.4 Calculate the percent accuracy for analytes in the QCCS (See Section 9.4) as follows:

$$\%\ \text{Accuracy}_x = 100 \times \frac{\overline{X}_x}{T_x} \qquad \text{Eq. (3)}$$

where X_x is the mean measured value and T_x is the known true value of the analyte in the QCCS.

12.5 Obtain retention times (RT's) from data station or integrator or, for chromatograms from a chart recorder, calculate the RT's for analytes in the calibration standards (See Section 10.2.2.2) as follows:

$$RT = \frac{\text{Distance from injection to peak maximum}}{\text{Recorder chart speed}} \qquad \text{Eq. (4)}$$

12.6 Calculate the response factor for the internal standard (See Section 10.2.2.3) as follows:

$$RF_{is} = \frac{A_{is}}{C_{is}} \qquad \text{Eq. (5)}$$

where:

A_{is} = Area response of the internal standard.

C_{is} = Weight percent of the internal standard.

12.7 Calculate the relative response factors for analytes in the calibration standards (See Section 10.2.2.3) as follows:

where:

$$RRF_x = \frac{A_x}{RF_{is}\ C_x} \qquad \text{Eq. (6)}$$

RRF_x = Relative response factor for an individual analyte.

A_x = Area response of the analyte being measured.

C_x = Weight percent of the analyte being measured.

12.8 Calculate the percent relative standard deviation of the relative response factors for analytes in the calibration standards (See Section 10.2.2.4) as follows:

$$\%RSD = 100 \times \frac{\sqrt{\dfrac{\sum_{i=1}^{n} \left(RRF_x - \overline{RRF_x}\right)^2}{n-1}}}{\overline{RRF_x}} \qquad \text{Eq. (7)}$$

where:

n = Number of calibration concentration levels used for an analyte.

RRF_x = Individual RRF for an analyte.

$\overline{RRF_x}$ = Mean of all RRF′s for an analyte.

12.9 Calculate the percent difference in the relative response factors between the calibration curve and the daily calibration checks (See Section 10.3) as follows:

$$\% \text{ Difference} = \frac{\left| \overline{RRF_x} - RRF_c \right|}{\overline{RRF_x}} \times 100 \qquad \text{Eq. (8)}$$

where:

$\overline{RRF}$ = mean relative response factor from last calibration.
RRF = relative response factor from calibration check standard.

13. *Measurement of Reaction Byproducts That are HAP*. [Reserved]

14. *Method Performance*. [Reserved]

15. *Pollution Prevention*. [Reserved]

16. *Waste Management*

16.1 The coating samples and laboratory standards and reagents may contain compounds which require management as hazardous waste. It is the laboratory's responsibility to ensure all wastes are managed in accordance with all applicable laws and regulations.

16.2 To avoid excessive laboratory waste, obtain only enough sample for laboratory analysis.

16.3 It is recommended that discarded waste coating solids, used rags, used paper towels, and other nonglass or nonsharp waste materials be placed in a plastic bag before disposal. A separate container, designated ''For Sharp Objects Only,'' is recommended for collection of discarded glassware and other sharp-edge items used in the laboratory. It is recommended that unused or excess samples and reagents be placed in a solvent-resistant plastic or metal container with a lid or cover designed for flammable liquids. This container should not be stored in the area where analytical work is performed. It is recommended that a record be kept of all compounds placed in the container for identification of the contents upon disposal.

17. References

1. Clean Air Act Amendments, Public Law 101–549, Titles I–XI, November, 1990.

2. Standard Test Method for Water Content of Water-Reducible Paints by Direct Injection into a Gas Chromatograph. ASTM Designation D3792–79.

3. Standard Practice for Sampling Liquid Paints and Related Pigment Coatings. ASTM Designation D3925–81.

4. Standard Test Method for Determination of Dichloromethane and 1,1,1-Trichloroethane in Paints and Coatings by Direct Injection into a Gas Chromatograph. ASTM Designation D4457–85.

5. Standard Test Method for Determining the Unreacted Monomer Content of Latexes Using Capillary Column Gas Chromatography. ASTM Designation D4827–93.

6. Standard Test Method for Determining Unreacted Monomer Content of Latexes Using Gas-Liquid Chromatography. ASTM Designation D 4747–87.

7. Method 301—''Field Validation of Pollutant Measurement Methods from Various Waste Media,'' 40 CFR 63, Appendix A.

8. ''Reagent Chemicals, American Chemical Society Specifications,'' American Chemical Society, Washington, DC. For suggestions on the testing of reagents not listed by the American Chemical Society, see ''Reagent Chemicals and Standards'' by Joseph Rosin, D. Van Nostrand Co., Inc., New York, NY and the ''United States Pharmacopeia.''

18. Tables, Diagrams, Flowcharts, and Validation Data

Agency: _____
Inspector: _____
Date/Time: _____
Sample ID#: _____
Source ID: _____
Coating Name/Type: _____
Plant Witness: _____
Type Analysis Required: _____
Special Handling: _____

Sample Container Label

Coating Data

Date: _____
Source: _____

Data	Sample ID No.	Sample ID No.
Coating:		
Supplier Name		
Name and Color of Coating		
Type of Coating (primer, clearcoat, etc.)		
Identification Number for Coating		
Coating Density (lbs/gal)		

Data	Sample ID No.	Sample ID No.
Total Volatiles Content (wt percent)	.....	.....
Water Content (wt percent)	.....	.....
Exempt Solvents Content (wt percent)	.....	.....
VOC Content (wt percent)	.....	.....
Solids Content (vol percent)	.....	.....
Diluent Properties:		
Name.		
Identification Number	.....	.....
Diluent Solvent Density (lbs/gal)	.....	.....
VOC Content (wt percent)	.....	.....
Water Content (wt percent)	.....	.....
Exempt Solvent Content (wt percent)	.....	.....
Diluent/Solvent Ratio (gal diluent solvent/gal coating)	.....	.....

Stock Reference Standard

Name of Reference Material: _____

Supplier Name: _____

Lot Number: _____

Purity: _____

Name of Solvent Material: *Dimethylformamide* _____

Supplier Name: _____

Lot Number: _____

Purity: _____

Date Prepared: _____

Prepared By: _____

Notebook/page no.: _____

PREPARATION INFORMATION

1. Weight Empty Flask ..... _____,g
2. Weight Plus DMF ..... _____,g
3. Weight Plus Reference Material. _____,g
4. Weight After Made to Volume. _____,g
5. Weight DMF (lines 2–1+3–4). _____,g
6. Weight Ref. Material (lines 3–2). _____,g
7. Corrected Weight of Reference Material (line 6 times purity). _____,g

PREPARATION INFORMATION—Continued

8. Fraction Reference Material in Standard (Line 7 ÷ Line 5) soln. _____,g/g
9. Total Volume of Standard Solution. _____, ml
10. Weight Reference Material per ml of Solution (Line 7 ÷ Line 9). _____,g/ml

Laboratory ID No. for this Standard. _____

Expiration Date for this Standard. _____

CALIBRATION STANDARD

Date Prepared: _____

Date Expires: _____

Prepared By: _____

Notebook/page: _____

Calibration Standard Identification No.:

_____

PREPARATION INFORMATION

Final Weight Flask Plus Reagents. _____, g

Weight Empty Flask ..... _____, g

Total Weight Of Reagents _____, g

Analyte name [a]	Stock reference standard ID No.	Amount of stock reference standard added (by volume or by weight)				Calculated weight analyte added, g	Weight percent analyte in calibration standard [b]
		Volume added, ml	Amount in standard, g/ml	Weight added, g	Amount in standard, g/g soln		
.....	.....	.....	.....	.....	.....	.....	.....
.....	.....	.....	.....	.....	.....	.....	.....
.....	.....	.....	.....	.....	.....	.....	.....
.....	.....	.....	.....	.....	.....	.....	.....
.....	.....	.....	.....	.....	.....	.....	.....
.....	.....	.....	.....	.....	.....	.....	.....
.....	.....	.....	.....	.....	.....	.....	.....
.....	.....	.....	.....	.....	.....	.....	.....
.....	.....	.....	.....	.....	.....	.....	.....
.....	.....	.....	.....	.....	.....	.....	.....

[a] Include internal standard(s).
[b] Weight percent = weight analyte added ÷ total weight of reagents.

Quality Control Check Standard _____

Date Prepared: _____

Date Expires: _____

Prepared By: _____

Notebook/page: _____

Quality Control Check Standard Identification No.:

PREPARATION INFORMATION

Final Weight Flask Plus Reagents. _____,g

Weight Empty Flask ..... _____,g

Total Weight Of Reagents _____,g

Analyte name [a]	Stock reference standard ID No.	Amount of stock reference standard added (by volume or by weight)				Calculated weight analyte added, g	Weight percent analyte in QCC standard [b]
		Volume added, ml	Amount in standard, g/ml	Weight added, g	Amount in standard, g/g soln		
.....	.....	.....	.....	.....	.....	.....	.....
.....	.....	.....	.....	.....	.....	.....	.....
.....	.....	.....	.....	.....	.....	.....	.....
.....	.....	.....	.....	.....	.....	.....	.....
.....	.....	.....	.....	.....	.....	.....	.....
.....	.....	.....	.....	.....	.....	.....	.....
.....	.....	.....	.....	.....	.....	.....	.....
.....	.....	.....	.....	.....	.....	.....	.....
.....	.....	.....	.....	.....	.....	.....	.....
.....	.....	.....	.....	.....	.....	.....	.....

[a] Include internal Standard(s).
[b] Weight percent=weight analyte added ÷ total weight of reagents.

Quality Control Check Standard Analysis

Date OCCS Analyzed: _____

OCCS Identification No. _____

Analyst: _____

QCC Expiration Date: _____

ANALYSIS RESULTS

Analyte	Weight percent determined			Mean Wt percent	Percent accuracx	Percent RSD	Meets criteria in Section 9.4.6	
	Run 1	Run 2	Run 3				Percent accuracy	Percent RSD
.....	.....	.....	.....	.....	.....	.....	.....	.....
.....	.....	.....	.....	.....	.....	.....	.....	.....
.....	.....	.....	.....	.....	.....	.....	.....	.....
.....	.....	.....	.....	.....	.....	.....	.....	.....
.....	.....	.....	.....	.....	.....	.....	.....	.....
.....	.....	.....	.....	.....	.....	.....	.....	.....
.....	.....	.....	.....	.....	.....	.....	.....	.....
.....	.....	.....	.....	.....	.....	.....	.....	.....
.....	.....	.....	.....	.....	.....	.....	.....	.....
.....	.....	.....	.....	.....	.....	.....	.....	.....
.....	.....	.....	.....	.....	.....	.....	.....	.....

Calibration of Gas Chromatograph

Calibrated By: _____

Calibration Date: _____

PART 1.—RETENTION TIMES FOR INDIVIDUAL ANALYTES

Analyte	Stock standard. ID No.	Recorder chart speed		Distance from injection point to peak maximum		Retention time, minutes [a]
		Inches/min.	cm/min.	Inches	Centimeters	
.....	.....	.....	.....	.....	.....	.....
.....	.....	.....	.....	.....	.....	.....
.....	.....	.....	.....	.....	.....	.....
.....	.....	.....	.....	.....	.....	.....
.....	.....	.....	.....	.....	.....	.....
.....	.....	.....	.....	.....	.....	.....
.....	.....	.....	.....	.....	.....	.....

PART 1.—RETENTION TIMES FOR INDIVIDUAL ANALYTES—Continued

Analyte	Stock standard. ID No.	Recorder chart speed		Distance from injection point to peak maximum		Retention time, minutes [a]
		Inches/min.	cm/min.	Inches	Centimeters	
.....	.....	.....	.....	.....	.....	.....
.....	.....	.....	.....	.....	.....	.....

[a] Retention time=distance to peak maxima÷chart speed.

CALIBRATION OF GAS CHROMATOGRAPH Calibrated By: _____

Calibration Date: _____

PART 2.—ANALYSIS OF CALIBRATION STANDARDS

Analyte	Calib. STD ID No.	Calib. STD ID No.	Calib. STD ID No.
Name:			
Conc. in STD	.....	.....	.....
Area Response	.....	.....	.....
RT	.....	.....	.....
Name:			
Conc. in STD	.....	.....	.....
Area Response	.....	.....	.....
RT	.....	.....	.....
Name:			
Conc. in STD	.....	.....	.....
Area Response	.....	.....	.....
RT	.....	.....	.....
Name:			
Conc. in STD	.....	.....	.....
Area Response	.....	.....	.....
RT	.....	.....	.....
Name:			
Conc. in STD	.....	.....	.....
Area Response	.....	.....	.....
RT	.....	.....	.....
Name:			
Conc. in STD	.....	.....	.....
Area Response	.....	.....	.....
RT	.....	.....	.....
Name:			
Conc. in STD	.....	.....	.....
Area Response	.....	.....	.....
RT	.....	.....	.....
Name:			
Conc. in STD	.....	.....	.....
Area Response	.....	.....	.....
RT	.....	.....	.....
Internal Standard Name:			
Conc. in STD	.....	.....	.....
Area Response	.....	.....	.....
RT	.....	.....	.....

Calibration of Gas Chromatograph Calibrated By: _____

Calibration Date: _____

PART 3.—DATA ANALYSIS FOR CALIBRATION STANDARDS

Analyte	Calib. STD ID	Calib. STD ID	Calib. STD ID	Mean	percent RSD of RF	Is RT within ±0.05 min of RT for stock? (Y/N)	Is percent RSD <30% (Y/N)
Name:							
RT	.....	.....	.....	.....	.....	.....	.....
RF	.....	.....	.....	.....	.....	.....	.....
Name:							
RT	.....	.....	.....	.....	.....	.....	.....

PART 3.—DATA ANALYSIS FOR CALIBRATION STANDARDS—Continued

Analyte	Calib. STD ID	Calib. STD ID	Calib. STD ID	Mean	percent RSD of RF	Is RT within ±0.05 min of RT for stock? (Y/N)	Is percent RSD <30% (Y/N)
RF	.....	.....	.....	.....	.....	.....	.....
Name:							
RT	.....	.....	.....	.....	.....	.....	.....
RF	.....	.....	.....	.....	.....	.....	.....
Name:							
RT	.....	.....	.....	.....	.....	.....	.....
RF	.....	.....	.....	.....	.....	.....	.....
Name:							
RT	.....	.....	.....	.....	.....	.....	.....
RF	.....	.....	.....	.....	.....	.....	.....
Name:							
RT	.....	.....	.....	.....	.....	.....	.....
RF	.....	.....	.....	.....	.....	.....	.....
Name:							
RT	.....	.....	.....	.....	.....	.....	.....
RF	.....	.....	.....	.....	.....	.....	.....

Daily Calibration Check

Date: _____

Analyst: _____

Calibration Check Standard ID No.:

Expiration Date: _____

Analyte	Retention Time (RT)			Response Factor (RF)		
	Last	This	Difference [a]	Last	This	Difference [b]
.....	.....	.....	.....	.....	.....	.....
.....	.....	.....	.....	.....	.....	.....
.....	.....	.....	.....	.....	.....	.....
.....	.....	.....	.....	.....	.....	.....
.....	.....	.....	.....	.....	.....	.....
.....	.....	.....	.....	.....	.....	.....
.....	.....	.....	.....	.....	.....	.....
.....	.....	.....	.....	.....	.....	.....
.....	.....	.....	.....	.....	.....	.....
.....	.....	.....	.....	.....	.....	.....
.....	.....	.....	.....	.....	.....	.....

[a] Retention time (RT) change (difference) must be less than ±0.10 minutes.
[b] Response factor (RF) change (difference) must be less than 20 percent for each analyte and for the internal standard.

Sample Analysis

Vial A ID No.: _____

Vial B ID No.: _____

Analyzed By: _____

Date: _____

Sample preparation information	Vial A (g)	Vial B (g)
Measured:		
wt empty vial		
wt plus DMF		
wt plus sample		
wt plus internal		
standard		
Calculated:		
wt DMF		
wt sample		
wt internal standard		

ANALYSIS RESULTS: DUPLICATE SAMPLES

Analyte	Area response		RF	Wt percent in sample		
	Vial A	Vial B		Vial A	Vial B	Average
.....						

ANALYSIS RESULTS: DUPLICATE SAMPLES—Continued

Analyte	Area response		RF	Wt percent in sample		
	Vial A	Vial B		Vial A	Vial B	Average
.....						
.....						
.....						
.....						
.....						
.....						
.....						
.....						
.....						
.....						
.....						
.....						
Internal Standard						

METHOD 312A—DETERMINATION OF STYRENE IN LATEX STYRENE-BUTADIENE RUBBER, THROUGH GAS CHROMATOGRAPHY

1. Scope and Application

1.1 This method describes a procedure for determining parts per million (ppm) styrene monomer (CAS No. 100–42–5) in aqueous samples, including latex samples and styrene stripper water.

1.2 The sample is separated in a gas chromatograph equipped with a packed column and a flame ionization detector.

2.0 Summary of Method

2.1 This method utilizes a packed column gas chromatograph with a flame ionization detector to determine the concentration of residual styrene in styrene butadiene rubber (SBR) latex samples.

3.0 Definitions

3.1 The definitions are included in the text as needed.

4.0 Interferences

4.1 In order to reduce matrix effects and emulsify the styrene, similar styrene free latex is added to the internal standard. There are no known interferences.

4.2 The operating parameters are selected to obtain resolution necessary to determine styrene monomer concentrations in latex.

5.0 Safety

5.1 It is the responsibility of the user of this procedure to establish appropriate safety and health practices.

6.0 Equipment and Supplies

6.1 Adjustable bottle-top dispenser, set to deliver 3 ml. (for internal standard), Brinkmann Dispensette, or equivalent.

6.2 Pipettor, set to 10 ml., Oxford Macroset, or equivalent.

6.3 Volumetric flask, 100-ml, with stopper.

6.4 Hewlett Packard Model 5710A dual channel gas chromatograph equipped with flame ionization detector.

6.4.1 11 ft. × ⅛ in. stainless steel column packed with 10% TCEP on 100/120 mesh Chromosorb P, or equivalent.

6.4.2 Perkin Elmer Model 023 strip chart recorder, or equivalent.

6.5 Helium carrier gas, zero grade.

6.6 Liquid syringe, 25-µl.

6.7 Digital MicroVAX 3100 computer with VG Multichrom software, or equivalent data handling system.

6.6 Wire Screens, circular, 70-mm, 80-mesh diamond weave.

6.7 DEHA—(N,N-Diethyl hydroxylamine), 97+% purity, CAS No. 3710–84–7

6.8 p-Dioxane, CAS No. 123–91–1

7.0 Reagents and Standards

7.1 Internal standard preparation.

7.1.1 Pipette 5 ml p-dioxane into a 1000-ml volumetric flask and fill to the mark with distilled water and mix thoroughly.

7.2 Calibration solution preparation.

7.2.1 Pipette 10 ml styrene-free latex (eg: NBR latex) into a 100-ml volumetric flask.

7.2.2 Add 3 ml internal standard (section 7.1.1 of this method).

7.2.3 Weigh exactly 10µl fresh styrene and record the weight.

7.2.4 Inject the styrene into the flask and mix well.

7.2.5 Add 2 drops of DEHA, fill to the mark with water and mix well again.

7.2.6 Calculate concentration of the calibration solution as follows:

mg/l styrene=(mg styrene added)/0.1 L

8.0 Sample Collection, Preservation, and Storage

8.1 A representative SBR emulsion sample should be caught in a clean, dry 6-oz. teflon lined glass container. Close it properly to assure no sample leakage.

8.2 The container should be labeled with sample identification, date and time.

9.0 Quality Control

9.1 The instrument is calibrated by injecting calibration solution (Section 7.2 of this method) five times.

9.2 The retention time for components of interest and relative response of monomer to the internal standard is determined.

9.3 Recovery efficiency must be determined once for each sample type and whenever modifications are made to the method.

9.3.1 A set of six latex samples shall be collected. Two samples shall be prepared for analysis from each sample. Each sample shall be analyzed in duplicate.

9.3.2 The second set of six latex samples shall be analyzed in duplicate before spiking each sample with approximately 1000 ppm styrene. The spiked samples shall be analyzed in duplicate.

9.3.3 For each hydrocarbon, calculate the average recovery efficiency (R) using the following equations:

where:

$R=\Sigma(R_n)/6$

where:

$R_n=(c_{ns}-c_v)/S_n$

n=sample number

c_{ns}=concentration of compound measured in spiked sample number n.

c_{nu}= concentration of compound measured in unspiked sample number n.

S_n=theoretical concentration of compound spiked into sample n.

9.3.4 A value of R between 0.70 and 1.30 is acceptable.

9.3.5 R is used to correct all reported results for each compound by dividing the measured results of each compound by the R for that compound for the same sample type.

10.0 Calibration and Instrument Settings

10.1 Injection port temperature, 250 °C.

10.2 Oven temperature, 110 °C, isothermal.

10.3 Carrier gas flow, 25 cc/min.

10.4 Detector temperature, 250 °C.

10.5 Range, 1X.

11.0 Procedure

11.1 Turn on recorder and adjust baseline to zero.

11.2 Prepare sample.

11.2.1 For latex samples, add 3 ml Internal Standard (section 7.1 of this method) to a 100-ml volumetric flask. Pipet 10 ml sample into the flask using the Oxford pipettor, dilute to the 100-ml mark with water, and shake well.

11.2.2 For water samples, add 3 ml Internal Standard (section 7.1 of this method) to a 100-ml volumetric flask and fill to the mark with sample. Shake well.

11.3 Flush syringe with sample.

11.4 Carefully inject 2 µl of sample into the gas chromatograph column injection port and press the start button.

11.5 When the run is complete the computer will print a report of the analysis.

12.0 Data Analysis and Calculation

12.1 For samples that are prepared as in section 11.2.1 of this method:

ppm styrene = A x D

Where:

A = ''ppm'' readout from computer

D = dilution factor (10 for latex samples)

12.2 For samples that are prepared as in section 11.2.2 of this method, ppm styrene is read directly from the computer.

13.0 Method Performance

13.1 This test has a standard deviation (1) of 3.3 ppm at 100 ppm styrene. The average Spike Recovery from six samples at 1000 ppm Styrene was 96.7 percent. The test method was validated using 926 ppm styrene standard. Six analysis of the same standard provided average 97.7 percent recovery. Note: These are example recoveries and do not replace quality assurance procedures in this method.

14.0 Pollution Prevention

14.1 Waste generation should be minimized where possible. Sample size should be an amount necessary to adequately run the analysis.

15.0 Waste Management

15.1 All waste shall be handled in accordance with Federal and State environmental regulations.

16.0 References and Publications

16.1 40 CFR 63 Appendix A—Method 301 Test Methods Field Validation of Pollutant Measurement

16.2 DSM Copolymer Test Method T–3060, dated October 19, 1995, entitled: *Determination of Residual Styrene in Latex*, Leonard, C.D., Vora, N.M.*et al*

METHOD 312B—DETERMINATION OF RESIDUAL STYRENE IN STYRENE-BUTADIENE (SBR) RUBBER LATEX BY CAPILLARY GAS CHROMATOGRAPHY

1.0 Scope

1.1 This method is applicable to SBR latex solutions.

1.2 This method quantitatively determines residual styrene concentrations in SBR latex solutions at levels from 80 to 1200 ppm.

2.0 Principle of Method

2.1 A weighed sample of a latex solution is coagulated with an ethyl alcohol (EtOH) solution containing a specific amount of alpha-methyl styrene (AMS) as the internal standard. The extract of this coagulation is then

injected into a gas chromatograph and separated into individual components. Quantification is achieved by the method of internal standardization.

3.0 Definitions

3.1 The definitions are included in the text as needed.

4.0 Interferences. [Reserved]

5.0 Safety

5.1 This method may involve hazardous materials, operations, and equipment. This method does not purport to address all of the safety problems associated with its use. It is the responsibility of the user of this method to establish appropriate safety and health practices and determine the applicability of regulatory limitations prior to use.

6.0 Equipment and Supplies

6.1 Analytical balance, 160 g capacity, and 0.1 mg resolution

6.2 Bottles, 2-oz capacity, with poly-cap screw lids

6.3 Mechanical shaker

6.4 Syringe, 10-ul capacity

6.5 Gas chromatograph, Hewlett Packard model 5890A, or equivalent, configured with FID with a megabore jet, splitless injector packed with silanized glass wool.

6.5.1 Establish the following gas chromatographic conditions, and allow the system to thoroughly equilibrate before use.

Injection technique = Splitless
Injector temperature = 225 deg C
Oven temperature = 70 deg C (isothermal)
Detector: temperature = 300 deg C
range = 5
attenuation = 0
Carrier gas: helium = 47 ml/min
Detector gases: hydrogen = 30 ml/min
air = 270 ml/min
make-up = 0 ml/min

Analysis time: = 3.2 min at the specified carrier gas flow rate and column temperature.

6.6 Gas chromatographic column, DB–1, 30 M X 0.53 ID, or equivalent, with a 1.5 micron film thickness.

6.7 Data collection system, Perkin-Elmer/Nelson Series Turbochrom 4 Series 900 Interface, or equivalent.

6.8 Pipet, automatic dispensing, 50-ml capacity, and 2-liter reservoir.

6.9 Flasks, volumetric, class A, 100-ml and 1000-ml capacity.

6.10 Pipet, volumetric delivery, 10-ml capacity, class A.

7.0 Chemicals and Reagents

CHEMICALS:

7.1 Styrene, C8H8, 99+%, CAS 100–42–5

7.2 Alpha methyl styrene, C9H10, 99%, CAS 98–83–9

7.3 Ethyl alcohol, C2H5OH, denatured formula 2B, CAS 64–17–5

REAGENTS:

7.4 Internal Standard Stock Solution: 5.0 mg/ml AMS in ethyl alcohol.

7.4.1 Into a 100-ml volumetric flask, weigh 0.50 g of AMS to the nearest 0.1 mg.

7.4.2 Dilute to the mark with ethyl alcohol. This solution will contain 5.0 mg/ml AMS in ethyl alcohol and will be labeled the AMS STOCK SOLUTION.

7.5 Internal Standard Working Solution: 2500 ug/50 ml of AMS in ethyl alcohol.

7.5.1 Using a 10 ml volumetric pipet, quantitatively transfer 10.0 ml of the AMS STOCK SOLUTION into a 1000-ml volumetric flask.

7.5.2 Dilute to the mark with ethyl alcohol. This solution will contain 2500 ug/50ml of AMS in ethyl alcohol and will be labeled the AMS WORKING SOLUTION.

7.5.3 Transfer the AMS WORKING SOLUTION to the automatic dispensing pipet reservoir.

7.6 Styrene Stock Solution: 5.0 mg/ml styrene in ethyl alcohol.

7.6.1 Into a 100-ml volumetric flask, weigh 0.50 g of styrene to the nearest 0.1 mg.

7.6.2 Dilute to the mark with ethyl alcohol. This solution will contain 5.0 mg/ml styrene in ethyl alcohol and will be labeled the STYRENE STOCK SOLUTION.

7.7 Styrene Working Solution: 5000 ug/10 ml of styrene in ethyl alcohol.

7.7.1 Using a 10-ml volumetric pipet, quantitatively transfer 10.0 ml of the STYRENE STOCK SOLUTION into a 100-ml volumetric flask.

7.7.2 Dilute to the mark with ethyl alcohol. This solution will contain 5000 ug/10 ml of styrene in ethyl alcohol and will be labeled the STYRENE WORKING SOLUTION.

8.0 Sample Collection, Preservation and Storage

8.1 Label a 2-oz sample poly-cap lid with the identity, date and time of the sample to be obtained.

8.2 At the sample location, open sample valve for at least 15 seconds to ensure that the sampling pipe has been properly flushed with fresh sample.

8.3 Fill the sample jar to the top (no headspace) with sample, then cap it tightly.

8.4 Deliver sample to the Laboratory for testing within one hour of sampling.

8.5 Laboratory testing will be done within two hours of the sampling time.

8.6 No special storage conditions are required unless the storage time exceeds 2 hours in which case refrigeration of the sample is recommended.

9.0 Quality Control

9.1 For each sample type, 12 samples of SBR latex shall be obtained from the process

for the recovery study. Half the vials and caps shall be tared, labeled ''spiked'', and numbered 1 through 6. The other vials are labeled ''unspiked'' and need not be tared, but are also numbered 1 through 6.

9.2 The six vials labeled ''spiked'' shall be spiked with an amount of styrene to approximate 50% of the solution's expected residual styrene level.

9.3 The spiked samples shall be shaken for several hours and allowed to cool to room temperature before analysis.

9.4 The six samples of unspiked solution shall be coagulated and a mean styrene value shall be determined, along with the standard deviation, and the percent relative standard deviation.

9.5 The six samples of the spiked solution shall be coagulated and the results of the analyses shall be determined using the following equations:

$M_r = M_s - M_u$

$R = M_r / S$

where:

M_u=Mean value of styrene in the unspiked sample

M_s=Measured amount of styrene in the spiked sample

M_r=Measured amount of the spiked compound

S=Amount of styrene added to the spiked sample

R=Fraction of spiked styrene recovered

9.6 A value of R between 0.70 and 1.30 is acceptable.

9.7 R is used to correct all reported results for each compound by dividing the measured results of each compound by the R for that compound for the same sample type.

10.0 Calibration

10.1 Using a 10-ml volumetric pipet, quantitatively transfer 10.0 ml of the STYRENE WORKING SOLUTION (section 7.7.2 of this method) into a 2-oz bottle.

10.2 Using the AMS WORKING SOLUTION equipped with the automatic dispensing pipet (section 7.5.3 of this method), transfer 50.0 ml of the internal standard solution into the 2-oz bottle.

10.3 Cap the 2-oz bottle and swirl. This is the calibration standard, which contains 5000 µg of styrene and 2500 µg of AMS.

10.4 Using the conditions prescribed (section 6.5 of this method), chromatograph 1 µl of the calibration standard.

10.5 Obtain the peak areas and calculate the relative response factor as described in the calculations section (section 12.1 of this method).

11.0 Procedure

11.1 Into a tared 2-oz bottle, weigh 10.0 g of latex to the nearest 0.1 g.

11.2 Using the AMS WORKING SOLUTION equipped with the automatic dispensing pipet (section 7.5.3 of this method), transfer 50.0 ml of the internal standard solution into the 2-oz bottle.

11.3 Cap the bottle. Using a mechanical shaker, shake the bottle for at least one minute or until coagulation of the latex is complete as indicated by a clear solvent.

11.4 Using the conditions prescribed (section 6.5 of this method), chromatograph 1 ul of the liquor.

11.5 Obtain the peak areas and calculate the concentration of styrene in the latex as described in the calculations section (Section 12.2 of this method).

12.0 Calculations

12.1 Calibration:

$RF = (W_x \times A_{is}) / (W_{is} \times A_x)$

where:

RF=the relative response factor for styrene

W_x=the weight (ug) of styrene

A_{is}=the area of AMS

W_{is}=the weight (ug) of AMS

A_x=the area of styrene

12.2 Procedure:

$ppm_{styrene} = (A_x\ RF \times W_{is}) / (A_{is} \times W_s)$

where:

$ppm_{styrene}$=parts per million of styrene in the latex

A_x=the area of styrene

RF=the response factor for styrene

W_{is}=the weight (ug) of AMS

A_{is}=the area of AMS

W_s=the weight (g) of the latex sample

12.3 Correct for recovery (R) as determined by section 9.0 of this method.

13.0 Precision

13.1 Precision for the method was determined at the 80, 144, 590, and 1160 ppm levels. The standard deviations were 0.8, 1.5, 5 and 9 ppm respectively. The percent relative standard deviations (%RSD) were 1% or less at all levels. Five degrees of freedom were used for all precision data except at the 80 ppm level, where nine degrees of freedom were used. Note: These are example results and do not replace quality assurance procedures in this method.

14.0 Pollution Prevention

14.1 Waste generation should be minimized where possible. Sample size should be an amount necessary to adequately run the analysis.

15.0 Waste Management

15.1 Discard liquid chemical waste into the chemical waste drum.

15.2 Discard latex sample waste into the latex waste drum.

15.3 Discard polymer waste into the polymer waste container.

16.0 References

16.1 This method is based on Goodyear Chemical Division Test Method E–889.

METHOD 312C—DETERMINATION OF RESIDUAL STYRENE IN SBR LATEX PRODUCED BY EMULSION POLYMERIZATION

1.0 Scope

1.1 This method is applicable for determining the amount of residual styrene in SBR latex as produced in the emulsion polymerization process.

2.0 Principle of Method

2.1 A weighed sample of latex is coagulated in 2-propanol which contains alpha-methyl styrene as an Internal Standard. The extract from the coagulation will contain the alpha-methyl styrene as the Internal Standard and the residual styrene from the latex. The extract is analyzed by a Gas Chromatograph. Percent styrene is calculated by relating the area of the styrene peak to the area of the Internal Standard peak of known concentration.

3.0 Definitions

3.1 The definitions are included in the text as needed.

4.0 Interferences. [Reserved]

5.0 Safety

5.1 When using solvents, avoid contact with skin and eyes. Wear hand and eye protection. Wash thoroughly after use.

5.2 Avoid overexposure to solvent vapors. Handle only in well ventilated areas.

6.0 Equipment and Supplies

6.1 *Gas Chromatograph*—Hewlett Packard 5890, Series II with flame ionization detector, or equivalent.

Column—HP 19095F–123, 30m × 0.53mm, or equivalent. Substrate HP FFAP (cross-linked) film thickness 1 micrometer. Glass injector port liners with silanized glass wool plug.

Integrator—HP 3396, Series II, or equivalent.

6.2 Wrist action shaker

6.3 Automatic dispenser

6.4 Automatic pipet, calibrated to deliver 5.0 ±0.01 grams of latex

6.5 Four-ounce wide-mouth bottles with foil lined lids

6.6 Crimp cap vials, 2ml, teflon lined septa

6.7 Disposable pipets

6.8 Qualitative filter paper

6.9 Cap crimper

6.10 Analytical balance

6.11 10ml pipette

6.12 Two-inch funnel

7.0 Reagents and Standards

7.1 2-Propanol (HP2C grade)

7.2 Alpha methyl styrene (99+% purity)

7.3 Styrene (99+% purity)

7.4 Zero air

7.5 Hydrogen (chromatographic grade)

7.6 Helium

7.7 Internal Standard preparation

7.7.1 Weigh 5.000–5.005 grams of alpha-methyl styrene into a 100ml volumetric flask and bring to mark with 2-propanol to make Stock ''A'' Solution.

NOTE: Shelf life—6 months.

7.7.2 Pipette 10ml of Stock ''A'' Solution into a 100ml volumetric flask and bring to mark with 2-propanol to prepare Stock ''B'' Solution.

7.7.3 Pipette 10ml of the Stock ''B'' solution to a 1000ml volumetric flask and bring to the mark with 2-propanol. This will be the Internal Standard Solution (0.00005 grams/ml).

7.8 Certification of Internal Standard—Each batch of Stock ''B'' Solution will be certified to confirm concentration.

7.8.1 Prepare a Standard Styrene Control Solution in 2-propanol by the following method:

7.8.1.1 Weigh 5.000 ±.005g of styrene to a 100ml volumetric flask and fill to mark with 2-propanol to make Styrene Stock ''A'' Solution.

7.8.1.2 Pipette 10ml of Styrene Stock ''A'' Solution to a 100ml volumetric flask and fill to mark with 2-propanol to make Styrene Stock ''B'' Solution.

7.8.1.3 Pipette 10ml of Styrene Stock ''B'' soluion to a 250ml volumtric flask and fill to mark wtih 2-propanol to make the Certification Solution.

7.8.2 Certify Alpha-Methyl Styrene Stock ''B'' Solution.

7.8.2.1 Pipette 5ml of the Certification Solution and 25ml of the Alpha Methyl Styrene Internal Standard Solution to a 4-oz. bottle, cap and shake well.

7.8.2.2 Analyze the resulting mixture by GC using the residual styrene method. (11.4–11.6 of this method)

7.8.2.3 Calculate the weight of alpha methyl styrene present in the 25ml aliquat of the new Alpha Methyl Styrene Standard by the following equation:

$$W_x = F_x \, x W_{is}(A_x/A_{is})$$

Where

A_x = Peak area of alpha methyl styrene

A_{is} = Peak area of styrene

W_x = Weight of alpha methyl styrene

W_{is} = Weight of styrene (.00100)

F_x = Analyzed response factor = 1

The Alpha Methyl Styrene Stock Solution used to prepare the Internal Standard Solution may be considered certified if the weight of alpha methyl styrene analyzed by

this method is within the range of .00121g to .00129g.

8.0 Sampling

8.1 Collect a latex sample in a capped container. Cap the bottle and identify the sample as to location and time.

8.2 Deliver sample to Laboratory for testing within one hour.

8.3 Laboratory will test within two hours.

8.4 No special storage conditions are required.

9.0 Quality Control

9.1 The laboratory is required to operate a formal quality control program. This consists of an initial demonstration of the capability of the method as well as ongoing analysis of standards, blanks, and spiked samples to demonstrate continued performance.

9.1.1 When the method is first set up, a calibration is run and the recovery efficiency for each type of sample must be determined.

9.1.2 If new types of samples are being analyzed, then recovery efficiency for each new type of sample must be determined. New type includes any change, such as polymer type, physical form or a significant change in the composition of the matrix.

9.2 Recovery efficiency must be determined once for each sample type and whenever modifications are made to the method.

9.2.1 In determining the recovery efficiency, the quadruplet sampling system shall be used. Six sets of samples (for a total of 24) shall be taken. In each quadruplet set, half of the samples (two out of the four) shall be spiked with styrene.

9.2.2 Prepare the samples as described in section 8 of this method. To the vials labeled ''spiked'', add a known amount of styrene that is expected to be present in the latex.

9.2.3 Run the spiked and unspiked samples in the normal manner. Record the concentrations of styrene reported for each pair of spiked and unspiked samples with the same vial number.

9.2.4 For each hydrocarbon, calculate the average recovery efficiency (R) using the following equation:

$R=\Sigma(R_n)/12$

Where: n = sample number

$R_n=(M_s-M_u)/S$

M_s=total mass of compound (styrene) measured in spiked sample (μg)

M_u=total mass of compound (styrene) measured in unspiked sample (μg)

S=theoretical mass of compound (styrene) spiked into sample (μg)

R=fraction of spiked compound (styrene) recovered

9.2.5 A different R value should be obtained for each sample type. A value of R between 0.70 and 1.30 is acceptable.

9.2.6 R is used to correct all reported results for each compound by dividing the measured results of each compound by the R for that compound for the same sample type.

10.0 Calibration

A styrene control sample will be tested weekly to confirm the FID response and calibration.

10.1 Using the Styrene Certification Solution prepared in 7.8.1, perform test analysis as described in 7.8.2 using the equation in 7.8.2.3 to calculate results.

10.2 Calculate the weight of styrene in the styrene control sample using the following equation:

$W_{sty}=(F_x\ xA_{sty}\ xW_{is})A_{is}$

The instrument can be considered calibrated if the weight of the styrene analyzed is within range of 0.00097—0.00103gms.

11.0 Procedure

11.1 Using an auto pipet, add 25ml of Internal Standard Solution to a 4 oz. widemouth bottle.

11.2 Using a calibrated auto pipet, add 5.0 ± 0.01g latex to the bottle containing the 25ml of Internal Standard Solution.

11.3 Cap the bottle and place on the wrist action shaker. Shake the sample for a minimum of five minutes using the timer on the shaker. Remove from shaker.

11.4 Using a disposable pipet, fill the 2ml sample vial with the clear alcohol extract. (If the extract is not clear, it should be filtered using a funnel and filter paper.) Cap and seal the vial.

11.5 Place the sample in the autosampler tray and start the GC and Integrator. The sample will be injected into the GC by the auto-injector, and the Integrator will print the results.

11.6 *Gas Chromatograph Conditions*

Oven Temp—70 °C
Injector Temp—225 °C
Detector Temp—275 °C
Helium Pressure—500 KPA
Column Head Pressure—70 KPA
Makeup Gas—30 ml/min.
Column—HP 19095F—123, 30m x 0.53mm Substrate: HP—FFAP (cross-linked) 1 micrometer film thickness

12.0 Calculations

12.1 The integrator is programmed to do the following calculation at the end of the analysis:

$\%ResidualStyrene=(A_x\ XW_{is})/(A_{is}\ XW_x)XF_x\ X100$

Where:

A_x=Peak area of styrene

A_{is}=Peak area of internal standard

W_x=Weight of sample = 5g

W_{is}=Weight of internal std. = 0.00125g

F_x=Analyzed response factor = 1.0

12.2 The response factor is determined by analyzing a solution of 0.02g of styrene and

0.02g of alpha methyl styrene in 100ml of 2-propanol. Calculate the factor by the following equation:

$F_x=(W_x\ xA_{is})/(W_{is}\ xA_x)$

Where:

W_x=Weight of styrene

A_x=Peak area of styrene

W_{is}=Weight of alpha methyl styrene

A_{is}=Peak area of alpha methyl styrene

13.0 Method Performance

13.1 Performance must be determined for each sample type by following the procedures in section 9 of this method.

14.0 Waste Generation

14.1 Waste generation should be minimized where possible.

15.0 Waste Management

15.1 All waste shall be handled in accordance with Federal and State environmental regulations.

16.0 References. [Reserved]

METHOD 313A—DETERMINATION OF RESIDUAL HYDROCARBONS IN RUBBER CRUMB

1.0 Scope and Application

1.1 This method determines residual toluene and styrene in stripper crumb of the of the following types of rubber: polybutadiene (PBR) and styrene/butadiene rubber (SBR), both derived from solution polymerization processes that utilize toluene as the polymerization solvent.

1.2 The method is applicable to a wide range of concentrations of toluene and styrene provided that calibration standards cover the desired range. It is applicable at least over the range of 0.01 to 10.0 % residual toluene and from 0.1 to 3.0 % residual styrene. It is probably applicable over a wider range, but this must be verified prior to use.

1.3 The method may also be applicable to other process samples as long as they are of a similar composition to stripper crumb. See section 3.1 of this method for a description of stripper crumb.

2.0 Summary of Method

2.1 The wet crumb is placed in a sealed vial and run on a headspace sampler which heats the vial to a specified temperature for a specific time and then injects a known volume of vapor into a capillary GC. The concentration of each component in the vapor is proportional to the level of that component in the crumb sample and does not depend on water content of the crumb.

2.2 Identification of each component is performed by comparing the retention times to those of known standards.

2.3 Results are calculated by the external standard method since injections are all performed in an identical manner. The response for each component is compared with that obtained from dosed samples of crumb.

2.4 Measured results of each compound are corrected by dividing each by the average recovery efficiency determined for the same compound in the same sample type.

3.0 Definitions

3.1 Stripper crumb refers to pieces of rubber resulting from the steam stripping of a toluene solution of the same polymer in a water slurry. The primary component of this will be polymer with lesser amounts of entrained water and residual toluene and other hydrocarbons. The amounts of hydrocarbons present must be such that the crumb is a solid material, generally less that 10 % of the dry rubber weight.

4.0 Interferences

4.1 Contamination is not normally a problem since samples are sealed into vials immediately on sampling.

4.2 Cross contamination in the headspace sampler should not be a problem if the correct sampler settings are used. This should be verified by running a blank sample immediately following a normal or high sample. Settings may be modified if necessary if this proves to be a problem, or a blank sample may be inserted between samples.

4.3 Interferences may occur if volatile hydrocarbons are present which have retention times close to that of the components of interest. Since the solvent makeup of the processes involved are normally fairly well defined this should not be a problem. If it is found to be the case, switching to a different chromatographic column will probably resolve the situation.

5.0 Safety

5.1 The chemicals specified in this method should all be handled according to standard laboratory practices as well as any special precautions that may be listed in the MSDS for that compound.

5.2 Sampling of strippers or other process streams may involve high pressures and temperatures or may have the potential for exposure to chemical fumes. Only personnel who have been trained in the specific sampling procedures required for that process should perform this operation. An understanding of the process involved is necessary. Proper personal protective equipment should be worn. Any sampling devices should be inspected prior to use. A detailed sampling procedure which specifies exactly how to obtain the sample must be written and followed.

6.0 Equipment and Supplies

6.1 Hewlett Packard (HP) 7694 Headspace sampler, or equivalent, with the following conditions:

Times (min.): GC cycle time 6.0 , vial equilibration 30.0 , pressurization 0.25 , loop fill 0.25, loop equilibration 0.05 , inject 0.25

Temperatures (deg C): oven 70, loop 80, transfer line 90

Pressurization gas: He @ 16 psi

6.2 HP 5890 Series II capillary gas chromatograph, or equivalent, with the following conditions:

Column: Supelco SPB–1, or equivalent, 15m × .25mm × .25μ film

Carrier: He @ 6 psi

Run time: 4 minutes

Oven: 70 deg C isothermal

Injector: 200 deg C split ratio 50:1

Detector: FID @ 220 deg C

6.3 HP Chemstation consisting of computer, printer and Chemstation software, or an equivalent chromatographic data system.

6.4 20 ml headspace vials with caps and septa.

6.5 Headspace vial crimper.

6.6 Microliter pipetting syringes.

6.7 Drying oven at 100 deg C vented into cold trap or other means of trapping hydrocarbons released.

6.8 Laboratory shaker or tumbler suitable for the headspace vials.

6.9 Personal protective equipment required for sampling the process such as rubber gloves and face and eye protection.

7.0 Reagents and Standards

7.1 Toluene, 99.9+% purity, HPLC grade.

7.2 Styrene, 99.9+% purity, HPLC grade.

7.3 Dry rubber of same type as the stripper crumb samples.

8.0 Sample Collection, Preservation and Storage

8.1 Collect a sample of crumb in a manner appropriate for the process equipment being sampled.

8.1.1 If conditions permit, this may be done by passing a stream of the crumb slurry through a strainer, thus separating the crumb from the water. Allow the water to drain freely, do not attempt to squeeze any water from the crumb. Results will not depend on the exact water content of the samples. Immediately place several pieces of crumb directly into a headspace vial. This should be done with rubber gloves to protect the hands from both the heat and from contact with residual hydrocarbons. The vial should be between ¼ and ⅓ full. Results do not depend on sample size as long as there is sufficient sample to reach an equilibrium vapor pressure in the headspace of the vial. Cap and seal the vial. Prepare each sample at least in duplicate. This is to minimize the effect of the variation that naturally occurs in the composition of non homogeneous crumb. The free water is not analyzed by this method and should be disposed of appropriately along with any unused rubber crumb.

8.1.2 Alternatively the process can be sampled in a specially constructed sealed bomb which can then be transported to the laboratory. The bomb is then cooled to ambient temperature by applying a stream of running water. The bomb can then be opened and the crumb separated from the water and the vials filled as described in section 8.1.1 of this method. The bomb may be stored up to 8 hours prior to transferring the crumb into vials.

8.2 The sealed headspace vials may be run immediately or may be stored up to 72 hours prior to running. It is possible that even longer storage times may be acceptable, but this must be verified for the particular type of sample being analyzed (see section 9.2.3 of this method). The main concern here is that some types of rubber eventually may flow, thus compacting the crumb so that the surface area is reduced. This may have some effect on the headspace equilibration.

9.0 Quality Control

9.1 The laboratory is required to operate a formal quality control program. This consists of an initial demonstration of the capability of the method as well as ongoing analysis of standards, blanks and spiked samples to demonstrate continued performance.

9.1.1 When the method is first set up a calibration is run (described in section 10 of this method) and an initial demonstration of method capability is performed (described in section 9.2 of this method). Also recovery efficiency for each type of sample must be determined (see section 9.4 of this method).

9.1.2 It is permissible to modify this method in order to improve separations or make other improvements, provided that all performance specifications are met. Each time a modification to the method is made it is necessary to repeat the calibration (section 10 of this method), the demonstration of method performance (section 9.2 of this method) and the recovery efficiency for each type of sample (section 9.4 of this method).

9.1.3 Ongoing performance should be monitored by running a spiked rubber standard. If this test fails to demonstrate that the analysis is in control, then corrective action must be taken. This method is described in section 9.3 of this method.

9.1.4 If new types of samples are being analyzed then recovery efficiency for each new type of sample must be determined. New type includes any change, such as polymer type, physical form or a significant change in the composition of the matrix.

9.2 Initial demonstration of method capability to establish the accuracy and precision

of the method. This is to be run following the calibration described in section 10 of this method.

9.2.1 Prepare a series of identical spiked rubber standards as described in section 9.3 of this method. A sufficient number to determine statistical information on the test should be run. Ten may be a suitable number, depending on the quality control methodology used at the laboratory running the tests. These are run in the same manner as unknown samples (see section 11 of this method).

9.2.2 Determine mean and standard deviation for the results. Use these to determine the capability of the method and to calculate suitable control limits for the ongoing performance check which will utilize the same standards.

9.2.3 Prepare several additional spiked rubber standards and run 2 each day to determine the suitability of storage of the samples for 24, 48 and 72 hours or longer if longer storage times are desired.

9.3 A spiked rubber standard should be run on a regular basis to verify system performance. This would probably be done daily if samples are run daily. This is prepared in the same manner as the calibration standards (section 10.1 of this method), except that only one concentration of toluene and styrene is prepared. Choose concentrations of toluene and styrene that fall in the middle of the range expected in the stripper crumb and then do not change these unless there is a major change in the composition of the unknowns. If it becomes necessary to change the composition of this standard the initial performance demonstration must be repeated with the new standard (section 9.2 of this method).

9.3.1 Each day prepare one spiked rubber standard to be run the following day. The dry rubber may be prepared in bulk and stored for any length of time consistent with the shelf life of the product. The addition of water and hydrocarbons must be performed daily and all the steps described under section 10.1 of this method must be followed.

9.3.2 Run the spiked rubber standard prepared the previous day. Record the results and plot on an appropriate control chart or other means of determining statistical control.

9.3.3 If the results for the standard indicate that the test is out of control then corrective action must be taken. This may include a check on procedures, instrument settings, maintenance or recalibration. Samples may be stored (see section 8.2 of this method) until compliance is demonstrated.

9.4 Recovery efficiency must be determined once for each sample type and whenever modifications are made to the method.

9.4.1 For each sample type collect 12 samples from the process (section 8.1 of this method). This should be done when the process is operating in a normal manner and residual hydrocarbon levels are in the normal range. Half the vials and caps should be tared, labeled ''spiked'' and numbered 1 through 6. The other vials are labeled ''unspiked'' and need not be tared but are also numbered 1 through 6. Immediately on sampling, the vials should be capped to prevent loss of volatiles. Allow all the samples to cool completely to ambient temperature. Reweigh each of the vials labeled ''spiked'' to determine the weight of wet crumb inside.

9.4.2 The dry weight of rubber present in the wet crumb is estimated by multiplying the weight of wet crumb by the fraction of nonvolatiles typical for the sample. If this is not known, an additional quantity of crumb may be sampled, weighed, dried in an oven and reweighed to determine the fraction of volatiles and nonvolatiles prior to starting this procedure.

9.4.3 To the vials labeled ''spiked'' add an amount of a mixture of toluene and styrene that is between 40 and 60 % of the amount expected in the crumb. This is done by removing the cap, adding the mixture by syringe, touching the tip of the needle to the sample in order to remove the drop and then immediately recapping the vials. The mixture is not added through the septum, because a punctured septum may leak and vent vapors as the vial is heated. The weights of toluene and styrene added may be calculated from the volumes of the mixture added, its composition and density, or may be determined by the weight of the vials and caps prior to and after addition. The exact dry weight of rubber present and the concentration of residual toluene and styrene are not known at this time so an exact calculation of the concentration of hydrocarbons is not possible until the test is completed.

9.4.4 Place all the vials onto a shaker or tumbler for 24 ± 2 hours. This is essential in order for the hydrocarbons to be evenly distributed and completely absorbed into the rubber. If this is not followed the toluene and styrene will be mostly at the surface of the rubber and high results will be obtained.

9.4.5 Remove the vials from the shaker and tap them so that all the crumb settles to the bottom of the vials. Allow them to stand for 1 hour prior to analysis to allow any liquid to drain fully to the bottom.

9.4.6 Run the spiked and unspiked samples in the normal manner. Record the concentrations of toluene and styrene reported for each pair of spiked and unspiked samples with the same vial number.

9.4.7 Open each of the vials labeled ''spiked'', remove all the rubber crumb and place it into a tarred drying pan. Place in a 100 deg C oven for two hours, cool and reweigh. Subtract the weight of the tare to give the dry weight of rubber in each spiked vial. Calculate the concentration of toluene and styrene spiked into each vial as percent

of dry rubber weight. This will be slightly different for each vial since the weights of dry rubber will be different.

9.4.8 For each hydrocarbon calculate the average recovery efficiency (R) using the following equations:

$R=R__\Sigma(P_n)/6$ (average of the 6 individual R_n values)

Where:

$R_n=(C_{ns}—C_{nu)} / S_n$

Where:

n=vial number

Cns=concentration of compound measured in spiked sample number n.

Cnu=concentration of compound measured in unspiked sample number n.

Sn=theoretical concentration of compound spiked into sample n calculated in step 9.4.7

9.4.9 A different R value should be obtained for each compound (styrene and toluene) and for each sample type.

9.4.10 A value of R between 0.70 and 1.30 is acceptable.

9.4.11 R is used to correct all reported results for each compound by dividing the measured results of each compound by the R for that compound for the same sample type (see section 12.2 of this method.)

10.0 Calibration

10.1 Calibration standards are prepared by dosing known amounts of the hydrocarbons of interest into vials containing known amounts of rubber and water.

10.1.1 Cut a sufficient quantity of dry rubber of the same type as will be analyzed into pieces about the same size as that of the crumb. Place these in a single layer on a piece of aluminum foil or other suitable surface and place into a forced air oven at 100 °C for four hours. This is to remove any residual hydrocarbons that may be present. This step may be performed in advance.

10.1.2 Into each of a series of vials add 3.0 g of the dry rubber.

10.1.3 Into each vial add 1.0 ml distilled water or an amount that is close to the amount that will be present in the unknowns. The exact amount of water present does not have much effect on the analysis, but it is necessary to have a saturated environment. The water will also aid in the uniform distribution of the spiked hydrocarbons over the surface of the rubber after the vials are placed on the shaker (in step 10.1.5 of this method).

10.1.4 Into each vial add varying amounts of toluene and styrene by microliter syringe and cap the vials immediately to prevent loss. The tip of the needle should be carefully touched to the rubber in order to transfer the last drop to the rubber. Toluene and styrene may first be mixed together in suitable proportions and added together if desired. The weights of toluene and styrene added may be calculated from the volumes of the mixture added, its composition and density, or may be determined by the weight of the vials and caps prior to and after addition. Concentrations of added hydrocarbons are calculated as percent of the dry rubber weight. At least 5 standards should be prepared with the amounts of hydrocarbons added being calculated to cover the entire range possible in the unknowns. Retain two samples with no added hydrocarbons as blanks.

10.1.5 Place all the vials onto a shaker or tumbler for 24 ± 2 hours. This is essential in order for the hydrocarbons to be evenly distributed and completely absorbed into the rubber. If this is not followed the toluene and styrene will be mostly at the surface of the rubber and high results will be obtained.

10.1.6 Remove the vials from the shaker and tap them so that all the crumb settles to the bottom of the vials. Allow them to stand for 1 hour prior to analysis to allow any liquid to drain fully to the bottom.

10.2 Run the standards and blanks in the same manner as described for unknowns (section 11 of this method), starting with a blank, then in order of increasing hydrocarbon content and ending with the other blank.

10.3 Verify that the blanks are sufficiently free from toluene and styrene or any interfering hydrocarbons.

10.3.1 It is possible that trace levels may be present even in dry product. If levels are high enough that they will interfere with the calibration then the drying procedure in section 10.1.1 of this method should be reviewed and modified as needed to ensure that suitable standards can be prepared.

10.3.2 It is possible that the final blank is contaminated by the previous standard. If this is the case review and modify the sampler parameters as needed to eliminate this problem. If necessary it is possible to run blank samples between regular samples in order to reduce this problem, though it should not be necessary if the sampler is properly set up.

10.4 Enter the amounts of toluene and styrene added to each of the samples (as calculated in section 10.1.4 of this method) into the calibration table and perform a calibration utilizing the external standard method of analysis.

10.5 At low concentrations the calibration should be close to linear. If a wide range of levels are to be determined it may be desirable to apply a nonlinear calibration to get the best fit.

11.0 Procedure

11.1 Place the vials in the tray of the headspace sampler. Enter the starting and ending positions through the console of the sampler. For unknown samples each is run in

duplicate to minimize the effect of variations in crumb composition. If excessive variation is noted it may be desirable to run more than two of each sample.

11.2 Make sure the correct method is loaded on the Chemstation. Turn on the gas flows and light the FID flame.

11.3 Start the sequence on the Chemstation. Press the START button on the headspace unit. The samples will be automatically injected after equilibrating for 30 minutes in the oven. As each sample is completed the Chemstation will calculate and print out the results as percent toluene and styrene in the crumb based on the dry weight of rubber.

12.0 Data Analysis and Calculations

12.1 For each set of duplicate samples calculate the average of the measured concentration of toluene and styrene. If more than two replicates of each sample are run calculate the average over all replicates.

12.2 For each sample correct the measured amounts of toluene and styrene using the following equation:

Corrected Result = C_m/R

Where:

C_m = Average measured concentration for that compound.

R = Recovery efficiency for that compound in the same sample type (see section 9.4 of this method)

12.3 Report the recovery efficiency (R) and the corrected results of toluene and styrene for each sample.

13.0 Method Performance

13.1 This method can be very sensitive and reproducible. The actual performance depends largely on the exact nature of the samples being analyzed. Actual performance must be determined by each laboratory for each sample type.

13.2 The main source of variation is the actual variation in the composition of non homogeneous crumb in a stripping system and the small sample sizes employed here. It therefore is the responsibility of each laboratory to determine the optimum number of replicates of each sample required to obtain accurate results.

14.0 Pollution Prevention

14.1 Samples should be kept sealed when possible in order to prevent evaporation of hydrocarbons.

14.2 When drying of samples is required it should be done in an oven which vents into a suitable device that can trap the hydrocarbons released.

14.3 Dispose of samples as described in section 15.

15.0 Waste Management

15.1 Excess stripper crumb and water as well as the contents of the used sample vials should be properly disposed of in accordance with local and federal regulations.

15.2 Preferably this will be accomplished by having a system of returning unused and spent samples to the process.

16.0 References

16.1 ''HP 7694 Headspace Sampler—Operating and Service Manual'', Hewlett-Packard Company, publication number G1290–90310, June 1993.

METHOD 313B—THE DETERMINATION OF RESIDUAL HYDROCARBON IN SOLUTION POLYMERS BY CAPILLARY GAS CHROMATOGRAPHY

1.0 Scope

1.1 This method is applicable to solution polymerized polybutadiene (PBD).

1.2 This method quantitatively determines n-hexane in wet crumb polymer at levels from 0.08 to 0.15% by weight.

1.3 This method may be extended to the determination of other hydrocarbons in solution produced polymers with proper experimentation and documentation.

2.0 Principle of Method

2.1 A weighed sample of polymer is dissolved in chloroform and the cement is coagulated with an isopropyl alcohol solution containing a specific amount of alpha-methyl styrene (AMS) as the internal standard. The extract of this coagulation is then injected into a gas chromatograph and separated into individual components. Quantification is achieved by the method of internal standardization.

3.0 Definitions

3.1 The definitions are included in the text as needed.

4.0 Interferences. [Reserved]

5.0 Safety

5.1 This method may involve hazardous materials, operations, and equipment. This method does not purport to address all of the safety problems associated with its use. It is the responsibility of the user of this method to establish appropriate safety and health practices and determine the applicability of regulatory limitations prior to use.

6.0 Equipment and Supplies

6.1 Analytical balance, 160 g capacity, 0.1 mg resolution

6.2 Bottles, 2-oz capacity with poly-cap screw lids

6.3 Mechanical shaker

6.4 Syringe, 10–ul capacity

6.5 Syringe, 2.5–ml capacity, with 22 gauge 1.25 inch needle, PP/PE material, disposable

6.6 Gas chromatograph, Hewlett-Packard model 5890, or equivalent, configured with FID, split injector packed with silanized glass wool.

6.6.1 Establish the following gas chromatographic conditions, and allow the system to thoroughly equilibrate before use.

6.6.2 Injector parameters:

Injection technique=Split
Injector split flow=86 ml/min
Injector temperature=225 deg C

6.6.3 Oven temperature program:

Initial temperature=40 deg C
Initial time=6 min
Program rate=10 deg C/min
Upper limit temperature=175 deg C
Upper limit interval=10 min

6.6.4 Detector parameters:

Detector temperature=300 deg C
Hydrogen flow=30 ml/min
Air flow=350 ml/min
Nitrogen make up=26 ml/min

6.7 Gas chromatographic columns: SE–54 (5%-phenyl) (1%-vinyl)-methylpolysiloxane, 15 M×0.53 mm ID with a 1.2 micron film thickness, and a Carbowax 20M (polyethylene glycol), 15 M×0.53 mm ID with a 1.2 micron film thickness.

6.7.1 Column assembly: using a 0.53 mm ID butt connector union, join the 15 M×0.53 mm SE–54 column to the 15 M×0.53 mm Carbowax 20M. The SE–54 column will be inserted into the injector and the Carbowax 20M inserted into the detector after they have been joined.

6.7.2 Column parameters:

Helium flow=2.8 ml/min
Helium headpressure=2 psig

6.8 Centrifuge

6.9 Data collection system, Hewlett-Packard Model 3396, or equivalent

6.10 Pipet, 25–ml capacity, automatic dispensing, and 2 liter reservoir

6.11 Pipet, 2–ml capacity, volumetric delivery, class A

6.12 Flasks, 100 and 1000-ml capacity, volumetric, class A

6.13 Vial, serum, 50-ml capacity, red rubber septa and crimp ring seals

6.14 Sample collection basket fabricated out of wire mesh to allow for drainage

7.0 Chemicals and Reagents

CHEMICALS:

7.1 alpha-Methyl Styrene, C9H10, 99+% purity, CAS 98–83–9

7.2 n-Hexane, C6H14, 99+% purity, CAS 110–54–3

7.3 Isopropyl alcohol, C3H8O 99.5+% purity, reagent grade, CAS 67–63–0

7.4 Chloroform, CHCl3, 99% min., CAS 67–66–3

REAGENTS:

7.5 Internal Standard Stock Solution: 10 mg/25 ml AMS in isopropyl alcohol.

7.5.1 Into a 25-ml beaker, weigh 0.4 g of AMS to the nearest 0.1 mg.

7.5.2 Quantitatively transfer this AMS into a 1-L volumetric flask. Dilute to the mark with isopropyl alcohol.

7.5.3 Transfer this solution to the automatic dispensing pipet reservoir. This will be labeled the AMS STOCK SOLUTION.

7.6 n-Hexane Stock Solution: 13mg/2ml hexane in isopropyl alcohol.

7.6.1 Into a 100-ml volumetric flask, weigh 0.65 g of n-hexane to the nearest 0.1 mg.

7.6.2 Dilute to the mark with isopropyl alcohol. This solution will be labeled the n-HEXANE STOCK SOLUTION.

8.0 Sample Collection, Preservation and Storage

8.1 A sampling device similar to Figure 1 is used to collect a non-vented crumb rubber sample at a location that is after the stripping operation but before the sample is exposed to the atmosphere.

8.2 The crumb rubber is allowed to cool before opening the sampling device and removing the sample.

8.3 The sampling device is opened and the crumb rubber sample is collected in the sampling basket.

8.4 One pound of crumb rubber sample is placed into a polyethylene bag. The bag is labeled with the time, date and sample location.

8.5 The sample should be delivered to the laboratory for testing within one hour of sampling.

8.6 Laboratory testing will be done within 3 hours of the sampling time.

8.7 No special storage conditions are required unless the storage time exceeds 3 hours in which case refrigeration of the samples is recommended.

9.0 Quality Control

9.1 For each sample type, 12 samples shall be obtained from the process for the recovery study. Half of the vials and caps shall be tared, labeled ''spiked'', and numbered 1 through 6. The other vials shall be labeled ''unspiked'' and need not be tared, but are also numbered 1 through 6.

9.2 Determine the % moisture content of the crumb sample. After determining the % moisture content, the correction factor for calculating the dry crumb weight can be determined by using the equation in section 12.2 of this method.

9.3 Run the spiked and unspiked samples in the normal manner. Record the concentrations of the n-hexane content of the mixed hexane reported for each pair of spiked and unspiked samples.

9.4 For the recovery study, each sample of crumb shall be dissolved in chloroform containing a known amount of mixed hexane solvent.

9.5 For each hydrocarbon, calculate the recovery efficiency (R) using the following equations:

$M_r = M_s - M_u$

$R = M_r / S$

Where:

M_u=Measured amount of compound in the unspiked sample

M_s=Measured amount of compound in the spiked sample

M_r=Measured amount of the spiked compound

S=Amount of compound added to the spiked sample

R=Fraction of spiked compound recovered

9.6 Normally a value of R between 0.70 and 1.30 is acceptable.

9.7 R is used to correct all reported results for each compound by dividing the measured results of each compound by the R for that compound for the same sample type.

10.0 Calibration

10.1 Using the AMS STOCK SOLUTION equipped with the automatic dispensing pipet (7.5.3 of this method), transfer 25.0 ml of the internal standard solution into an uncapped 50-ml serum vial.

10.2 Using a 2.0 ml volumetric pipet, quantitatively transfer 2.0 ml of the n-HEXANE STOCK SOLUTION (7.6.2 of this method) into the 50-ml serum vial and cap. This solution will be labeled the CALIBRATION SOLUTION.

10.3 Using the conditions prescribed (6.6 of this method), inject 1 µl of the supernate.

10.4 Obtain the peak areas and calculate the response factor as described in the calculations section (12.1 of this method).

11.0 Procedure

11.1 Determination of Dry Polymer Weight

11.1.1 Remove wet crumb from the polyethylene bag and place on paper towels to absorb excess surface moisture.

11.1.2 Cut small slices or cubes from the center of the crumb sample to improve sample uniformity and further eliminate surface moisture.

11.1.3 A suitable gravimetric measurement should be made on a sample of this wet crumb to determine the correction factor needed to calculate the dry polymer weight.

11.2 Determination of n-Hexane in Wet Crumb

11.2.1 Remove wet crumb from the polyethylene bag and place on paper towels to absorb excess surface moisture.

11.2.2 Cut small slices or cubes from the center of the crumb sample to improve sample uniformity and further eliminate surface moisture.

11.2.3 Into a tared 2 oz bottle, weigh 1.5 g of wet polymer to the nearest 0.1 mg.

11.2.4 Add 25 ml of chloroform to the 2 oz bottle and cap.

11.2.5 Using a mechanical shaker, shake the bottle until the polymer dissolves.

11.2.6 Using the autodispensing pipet, add 25.0 ml of the AMS STOCK SOLUTION (7.5.3 of this method) to the dissolved polymer solution and cap.

11.2.7 Using a mechanical shaker, shake the bottle for 10 minutes to coagulate the dissolved polymer.

11.2.8 Centrifuge the sample for 3 minutes at 2000 rpm.

11.2.9 Using the conditions prescribed (6.6 of this method), chromatograph 1 µl of the supernate.

11.2.10 Obtain the peak areas and calculate the concentration of the component of interest as described in the calculations (12.2 of this method).

12.0 Calculations

12.1 Calibration:

$RF_x = (W_x \times A_{is}) / (W_{is} \times A_x)$

Where:

RF_x=the relative response factor for n-hexane

W_x=the weight (g) of n-hexane in the CALIBRATION SOLUTION

A_{is}=the area of AMS

W_{is}=the weight (g) of AMS in the CALIBRATION SOLUTION

A_x=the area of n-hexane

12.2 Procedure:

12.2.1 Correction Factor for calculating dry crumb weight.

F=1—(% moisture / 100)

Where:

F=Correction factor for calculating dry crumb weight

% moisture determined by appropriate method

12.2.2 Moisture adjustment for chromatographic determination.

$W_s = F \times W_c$

Where:

W_s=the weight (g) of the dry polymer corrected for moisture

F=Correction factor for calculating dry crumb weight

W_c=the weight (g) of the wet crumb in section 9.6

12.2.3 Concentration (ppm) of hexane in the wet crumb.

$ppm_x = (A_x * RF_x * W_{is} * 10000) / (A_{is} * W_s)$

Where:

ppm_x=parts per million of n-hexane in the polymer

A_x=the area of n-hexane

RF_x=the relative response factor for n-hexane
W_{is}=the weight (g) of AMS in the sample solution
A_{is}=the area of AMS
W_s=the weight (g) of the dry polymer corrected for moisture

13.0 Method Performance

13.1 Precision for the method was determined at the 0.08% level.

The standard deviation was 0.01 and the percent relative standard deviation (RSD) was 16.3 % with five degrees of freedom.

14.0 Waste Generation

14.1 Waste generation should be minimized where possible.

15.0 Waste Management

15.1 Discard liquid chemical waste into the chemical waste drum.

15.2 Discard polymer waste into the polymer waste container.

16.0 References

16.1 This method is based on Goodyear Chemical Division Test Method E–964.

METHOD 315—DETERMINATION OF PARTICULATE AND METHYLENE CHLORIDE EXTRACTABLE MATTER (MCEM) FROM SELECTED SOURCES AT PRIMARY ALUMINUM PRODUCTION FACILITIES

NOTE: This method does not include all of the specifications (e.g., equipment and supplies) and procedures (e.g., sampling and analytical) essential to its performance. Some material is incorporated by reference from other methods in this part. Therefore, to obtain reliable results, persons using this method should have a thorough knowledge of at least the following additional test methods: Method 1, Method 2, Method 3, and Method 5 of 40 CFR part 60, appendix A.

1.0 Scope and Application.

1.1 Analytes. Particulate matter (PM). No CAS number assigned. Methylene chloride extractable matter (MCEM). No CAS number assigned.

1.2 Applicability. This method is applicable for the simultaneous determination of PM and MCEM when specified in an applicable regulation. This method was developed by consensus with the Aluminum Association and the U.S. Environmental Protection Agency (EPA) and has limited precision estimates for MCEM; it should have similar precision to Method 5 for PM in 40 CFR part 60, appendix A since the procedures are similar for PM.

1.3 Data quality objectives. Adherence to the requirements of this method will enhance the quality of the data obtained from air pollutant sampling methods.

2.0 Summary of Method.

Particulate matter and MCEM are withdrawn isokinetically from the source. PM is collected on a glass fiber filter maintained at a temperature in the range of 120 ± 14 °C (248 ±25 °F) or such other temperature as specified by an applicable subpart of the standards or approved by the Administrator for a particular application. The PM mass, which includes any material that condenses on the probe and is subsequently removed in an acetone rinse or on the filter at or above the filtration temperature, is determined gravimetrically after removal of uncombined water. MCEM is then determined by adding a methylene chloride rinse of the probe and filter holder, extracting the condensable hydrocarbons collected in the impinger water, adding an acetone rinse followed by a methylene chloride rinse of the sampling train components after the filter and before the silica gel impinger, and determining residue gravimetrically after evaporating the solvents.

3.0 Definitions. [Reserved]

4.0 Interferences. [Reserved]

5.0 Safety.

This method may involve hazardous materials, operations, and equipment. This method does not purport to address all of the safety problems associated with its use. It is the responsibility of the user of this method to establish appropriate safety and health practices and determine the applicability of regulatory limitations prior to performing this test method.

6.0 Equipment and Supplies.

NOTE: Mention of trade names or specific products does not constitute endorsement by the EPA.

6.1 Sample collection. The following items are required for sample collection:

6.1.1 Sampling train. A schematic of the sampling train used in this method is shown in Figure 5–1, Method 5, 40 CFR part 60, appendix A. Complete construction details are given in APTD–0581 (Reference 2 in section 17.0 of this method); commercial models of this train are also available. For changes from APTD–0581 and for allowable modifications of the train shown in Figure 5–1, Method 5, 40 CFR part 60, appendix A, see the following subsections.

NOTE: The operating and maintenance procedures for the sampling train are described in APTD–0576 (Reference 3 in section 17.0 of this method). Since correct usage is important in obtaining valid results, all users should read APTD–0576 and adopt the operating and maintenance procedures outlined

in it, unless otherwise specified herein. The use of grease for sealing sampling train components is not recommended because many greases are soluble in methylene chloride. The sampling train consists of the following components:

6.1.1.1 Probe nozzle. Glass or glass lined with sharp, tapered leading edge. The angle of taper shall be ≤30 °, and the taper shall be on the outside to preserve a constant internal diameter. The probe nozzle shall be of the button-hook or elbow design, unless otherwise specified by the Administrator. Other materials of construction may be used, subject to the approval of the Administrator. A range of nozzle sizes suitable for isokinetic sampling should be available. Typical nozzle sizes range from 0.32 to 1.27 cm (⅛ to ½ in.) inside diameter (ID) in increments of 0.16 cm (1/16 in.). Larger nozzle sizes are also available if higher volume sampling trains are used. Each nozzle shall be calibrated according to the procedures outlined in section 10.0 of this method.

6.1.1.2 Probe liner. Borosilicate or quartz glass tubing with a heating system capable of maintaining a probe gas temperature at the exit end during sampling of 120±14 °C (248±25 °F), or such other temperature as specified by an applicable subpart of the standards or approved by the Administrator for a particular application. Because the actual temperature at the outlet of the probe is not usually monitored during sampling, probes constructed according to APTD–0581 and using the calibration curves of APTD–0576 (or calibrated according to the procedure outlined in APTD–0576) will be considered acceptable. Either borosilicate or quartz glass probe liners may be used for stack temperatures up to about 480 °C (900 °F); quartz liners shall be used for temperatures between 480 and 900 °C (900 and 1,650 °F). Both types of liners may be used at higher temperatures than specified for short periods of time, subject to the approval of the Administrator. The softening temperature for borosilicate glass is 820 °C (1,500 °F) and for quartz glass it is 1,500 °C (2,700 °F).

6.1.1.3 Pitot tube. Type S, as described in section 6.1 of Method 2, 40 CFR part 60, appendix A, or other device approved by the Administrator. The pitot tube shall be attached to the probe (as shown in Figure 5–1 of Method 5, 40 CFR part 60, appendix A) to allow constant monitoring of the stack gas velocity. The impact (high pressure) opening plane of the pitot tube shall be even with or above the nozzle entry plane (see Method 2, Figure 2–6b, 40 CFR part 60, appendix A) during sampling. The Type S pitot tube assembly shall have a known coefficient, determined as outlined in section 10.0 of Method 2, 40 CFR part 60, appendix A.

6.1.1.4 Differential pressure gauge. Inclined manometer or equivalent device (two), as described in section 6.2 of Method 2, 40 CFR part 60, appendix A. One manometer shall be used for velocity head (Dp) readings, and the other, for orifice differential pressure readings.

6.1.1.5 Filter holder. Borosilicate glass, with a glass frit filter support and a silicone rubber gasket. The holder design shall provide a positive seal against leakage from the outside or around the filter. The holder shall be attached immediately at the outlet of the probe (or cyclone, if used).

6.1.1.6 Filter heating system. Any heating system capable of maintaining a temperature around the filter holder of 120±14 °C (248±25 °F) during sampling, or such other temperature as specified by an applicable subpart of the standards or approved by the Administrator for a particular application. Alternatively, the tester may opt to operate the equipment at a temperature lower than that specified. A temperature gauge capable of measuring temperature to within 3 °C (5.4 °F) shall be installed so that the temperature around the filter holder can be regulated and monitored during sampling. Heating systems other than the one shown in APTD–0581 may be used.

6.1.1.7 Temperature sensor. A temperature sensor capable of measuring temperature to within ±3 °C (5.4 °F) shall be installed so that the sensing tip of the temperature sensor is in direct contact with the sample gas, and the temperature around the filter holder can be regulated and monitored during sampling.

6.1.1.8 Condenser. The following system shall be used to determine the stack gas moisture content: four glass impingers connected in series with leak-free ground glass fittings. The first, third, and fourth impingers shall be of the Greenburg-Smith design, modified by replacing the tip with a 1.3 cm (1/2 in.) ID glass tube extending to about 1.3 cm (1/2 in.) from the bottom of the flask. The second impinger shall be of the Greenburg-Smith design with the standard tip. The first and second impingers shall contain known quantities of water (section 8.3.1 of this method), the third shall be empty, and the fourth shall contain a known weight of silica gel or equivalent desiccant. A temperature sensor capable of measuring temperature to within 1 °C (2 °F) shall be placed at the outlet of the fourth impinger for monitoring.

6.1.1.9 Metering system. Vacuum gauge, leak-free pump, temperature sensors capable of measuring temperature to within 3 °C (5.4 °F), dry gas meter (DGM) capable of measuring volume to within 2 percent, and related equipment, as shown in Figure 5–1 of Method 5, 40 CFR part 60, appendix A. Other metering systems capable of maintaining sampling rates within 10 percent of isokinetic and of determining sample volumes to within 2 percent may be used, subject to the approval of the Administrator.

When the metering system is used in conjunction with a pitot tube, the system shall allow periodic checks of isokinetic rates.

6.1.1.10 Sampling trains using metering systems designed for higher flow rates than that described in APTD–0581 or APTD–0576 may be used provided that the specifications of this method are met.

6.1.2 Barometer. Mercury, aneroid, or other barometer capable of measuring atmospheric pressure to within 2.5 mm (0.1 in.) Hg.

NOTE: The barometric reading may be obtained from a nearby National Weather Service station. In this case, the station value (which is the absolute barometric pressure) shall be requested and an adjustment for elevation differences between the weather station and sampling point shall be made at a rate of minus 2.5 mm (0.1 in) Hg per 30 m (100 ft) elevation increase or plus 2.5 mm (0.1 in) Hg per 30 m (100 ft) elevation decrease.

6.1.3 Gas density determination equipment. Temperature sensor and pressure gauge, as described in sections 6.3 and 6.4 of Method 2, 40 CFR part 60, appendix A, and gas analyzer, if necessary, as described in Method 3, 40 CFR part 60, appendix A. The temperature sensor shall, preferably, be permanently attached to the pitot tube or sampling probe in a fixed configuration, such that the tip of the sensor extends beyond the leading edge of the probe sheath and does not touch any metal. Alternatively, the sensor may be attached just prior to use in the field. Note, however, that if the temperature sensor is attached in the field, the sensor must be placed in an interference-free arrangement with respect to the Type S pitot tube openings (see Method 2, Figure 2–4, 40 CFR part 60, appendix A). As a second alternative, if a difference of not more than 1 percent in the average velocity measurement is to be introduced, the temperature sensor need not be attached to the probe or pitot tube. (This alternative is subject to the approval of the Administrator.)

6.2 Sample recovery. The following items are required for sample recovery:

6.2.1 Probe-liner and probe-nozzle brushes. Nylon or Teflon® bristle brushes with stainless steel wire handles. The probe brush shall have extensions (at least as long as the probe) constructed of stainless steel, nylon, Teflon®, or similarly inert material. The brushes shall be properly sized and shaped to brush out the probe liner and nozzle.

6.2.2 Wash bottles. Glass wash bottles are recommended. Polyethylene or tetrafluoroethylene (TFE) wash bottles may be used, but they may introduce a positive bias due to contamination from the bottle. It is recommended that acetone not be stored in polyethylene or TFE bottles for longer than a month.

6.2.3 Glass sample storage containers. Chemically resistant, borosilicate glass bottles, for acetone and methylene chloride washes and impinger water, 500 ml or 1,000 ml. Screw-cap liners shall either be rubber-backed Teflon® or shall be constructed so as to be leak-free and resistant to chemical attack by acetone or methylene chloride. (Narrow-mouth glass bottles have been found to be less prone to leakage.) Alternatively, polyethylene bottles may be used.

6.2.4 Petri dishes. For filter samples, glass, unless otherwise specified by the Administrator.

6.2.5 Graduated cylinder and/or balance. To measure condensed water, acetone wash and methylene chloride wash used during field recovery of the samples, to within 1 ml or 1 g. Graduated cylinders shall have subdivisions no greater than 2 ml. Most laboratory balances are capable of weighing to the nearest 0.5 g or less. Any such balance is suitable for use here and in section 6.3.4 of this method.

6.2.6 Plastic storage containers. Air-tight containers to store silica gel.

6.2.7 Funnel and rubber policeman. To aid in transfer of silica gel to container; not necessary if silica gel is weighed in the field.

6.2.8 Funnel. Glass or polyethylene, to aid in sample recovery.

6.3 Sample analysis. The following equipment is required for sample analysis:

6.3.1 Glass or Teflon® weighing dishes.

6.3.2 Desiccator. It is recommended that fresh desiccant be used to minimize the chance for positive bias due to absorption of organic material during drying.

6.3.3 Analytical balance. To measure to within 0.1 mg.

6.3.4 Balance. To measure to within 0.5 g.

6.3.5 Beakers. 250 ml.

6.3.6 Hygrometer. To measure the relative humidity of the laboratory environment.

6.3.7 Temperature sensor. To measure the temperature of the laboratory environment.

6.3.8 Buchner fritted funnel. 30 ml size, fine (<50 micron)-porosity fritted glass.

6.3.9 Pressure filtration apparatus.

6.3.10 Aluminum dish. Flat bottom, smooth sides, and flanged top, 18 mm deep and with an inside diameter of approximately 60 mm.

7.0 Reagents and Standards.

7.1 Sample collection. The following reagents are required for sample collection:

7.1.1 Filters. Glass fiber filters, without organic binder, exhibiting at least 99.95 percent efficiency (<0.05 percent penetration) on 0.3 micron dioctyl phthalate smoke particles. The filter efficiency test shall be conducted in accordance with ASTM Method D 2986–95A (incorporated by reference in §63.841 of this part). Test data from the supplier's quality control program are sufficient for this purpose. In sources containing $S0_2$ or

SO_3, the filter material must be of a type that is unreactive to SO_2 or SO_3. Reference 10 in section 17.0 of this method may be used to select the appropriate filter.

7.1.2 Silica gel. Indicating type, 6 to 16 mesh. If previously used, dry at 175 °C (350 °F) for 2 hours. New silica gel may be used as received. Alternatively, other types of desiccants (equivalent or better) may be used, subject to the approval of the Administrator.

7.1.3 Water. When analysis of the material caught in the impingers is required, deionized distilled water shall be used. Run blanks prior to field use to eliminate a high blank on test samples.

7.1.4 Crushed ice.

7.1.5 Stopcock grease. Acetone-insoluble, heat-stable silicone grease. This is not necessary if screw-on connectors with Teflon'' sleeves, or similar, are used. Alternatively, other types of stopcock grease may be used, subject to the approval of the Administrator. [Caution: Many stopcock greases are methylene chloride-soluble. Use sparingly and carefully remove prior to recovery to prevent contamination of the MCEM analysis.]

7.2 Sample recovery. The following reagents are required for sample recovery:

7.2.1 Acetone. Acetone with blank values < 1 ppm, by weight residue, is required. Acetone blanks may be run prior to field use, and only acetone with low blank values may be used. In no case shall a blank value of greater than 1E–06 of the weight of acetone used be subtracted from the sample weight.

NOTE: This is more restrictive than Method 5, 40 CFR part 60, appendix A. At least one vendor (Supelco Incorporated located in Bellefonte, Pennsylvania) lists <1 mg/l as residue for its Environmental Analysis Solvents.

7.2.2 Methylene chloride. Methylene chloride with a blank value <1.5 ppm, by weight, residue. Methylene chloride blanks may be run prior to field use, and only methylene chloride with low blank values may be used. In no case shall a blank value of greater than 1.6E–06 of the weight of methylene chloride used be subtracted from the sample weight.

NOTE: A least one vendor quotes <1 mg/l for Environmental Analysis Solvents-grade methylene chloride.

7.3 Sample analysis. The following reagents are required for sample analysis:

7.3.1 Acetone. Same as in section 7.2.1 of this method.

7.3.2 Desiccant. Anhydrous calcium sulfate, indicating type. Alternatively, other types of desiccants may be used, subject to the approval of the Administrator.

7.3.3 Methylene chloride. Same as in section 7.2.2 of this method.

8.0 Sample Collection, Preservation, Storage, and Transport.

NOTE: The complexity of this method is such that, in order to obtain reliable results, testers should be trained and experienced with the test procedures.

8.11 Pretest preparation. It is suggested that sampling equipment be maintained according to the procedures described in APTD–0576.

8.1.1 Weigh several 200 g to 300 g portions of silica gel in airtight containers to the nearest 0.5 g. Record on each container the total weight of the silica gel plus container. As an alternative, the silica gel need not be preweighed but may be weighed directly in its impinger or sampling holder just prior to train assembly.

8.1.2 A batch of glass fiber filters, no more than 50 at a time, should placed in a soxhlet extraction apparatus and extracted using methylene chloride for at least 16 hours. After extraction, check filters visually against light for irregularities, flaws, or pinhole leaks. Label the shipping containers (glass or plastic petri dishes), and keep the filters in these containers at all times except during sampling and weighing.

8.1.3 Desiccate the filters at 20 ±5.6 °C (68 ±10 °F) and ambient pressure for at least 24 hours and weigh at intervals of at least 6 hours to a constant weight, i.e., <0.5 mg change from previous weighing; record results to the nearest 0.1 mg. During each weighing the filter must not be exposed to the laboratory atmosphere for longer than 2 minutes and a relative humidity above 50 percent. Alternatively (unless otherwise specified by the Administrator), the filters may be oven-dried at 104 °C (220 °F) for 2 to 3 hours, desiccated for 2 hours, and weighed. Procedures other than those described, which account for relative humidity effects, may be used, subject to the approval of the Administrator.

8.2 Preliminary determinations.

8.2.1 Select the sampling site and the minimum number of sampling points according to Method 1, 40 CFR part 60, appendix A or as specified by the Administrator. Determine the stack pressure, temperature, and the range of velocity heads using Method 2, 40 CFR part 60, appendix A; it is recommended that a leak check of the pitot lines (see section 8.1 of Method 2, 40 CFR part 60, appendix A) be performed. Determine the moisture content using Approximation Method 4 (section 1.2 of Method 4, 40 CFR part 60, appendix A) or its alternatives to make isokinetic sampling rate settings. Determine the stack gas dry molecular weight, as described in section 8.6 of Method 2, 40 CFR part 60, appendix A; if integrated Method 3 sampling is used for molecular weight determination, the integrated bag sample shall be taken simultaneously with, and for

the same total length of time as, the particulate sample run.

8.2.2 Select a nozzle size based on the range of velocity heads such that it is not necessary to change the nozzle size in order to maintain isokinetic sampling rates. During the run, do not change the nozzle size. Ensure that the proper differential pressure gauge is chosen for the range of velocity heads encountered (see section 8.2 of Method 2, 40 CFR part 60, appendix A).

8.2.3 Select a suitable probe liner and probe length such that all traverse points can be sampled. For large stacks, consider sampling from opposite sides of the stack to reduce the required probe length.

8.2.4 Select a total sampling time greater than or equal to the minimum total sampling time specified in the test procedures for the specific industry such that: (1) The sampling time per point is not less than 2 minutes (or some greater time interval as specified by the Administrator); and (2) the sample volume taken (corrected to standard conditions) will exceed the required minimum total gas sample volume. The latter is based on an approximate average sampling rate.

8.2.5 The sampling time at each point shall be the same. It is recommended that the number of minutes sampled at each point be an integer or an integer plus one-half minute, in order to eliminate timekeeping errors.

8.2.6 In some circumstances (e.g., batch cycles), it may be necessary to sample for shorter times at the traverse points and to obtain smaller gas sample volumes. In these cases, the Administrator's approval must first be obtained.

8.3 Preparation of sampling train.

8.3.1 During preparation and assembly of the sampling train, keep all openings where contamination can occur covered until just prior to assembly or until sampling is about to begin. Place 100 ml of water in each of the first two impingers, leave the third impinger empty, and transfer approximately 200 to 300 g of preweighed silica gel from its container to the fourth impinger. More silica gel may be used, but care should be taken to ensure that it is not entrained and carried out from the impinger during sampling. Place the container in a clean place for later use in the sample recovery. Alternatively, the weight of the silica gel plus impinger may be determined to the nearest 0.5 g and recorded.

8.3.2 Using a tweezer or clean disposable surgical gloves, place a labeled (identified) and weighed filter in the filter holder. Be sure that the filter is properly centered and the gasket properly placed so as to prevent the sample gas stream from circumventing the filter. Check the filter for tears after assembly is completed.

8.3.3 When glass liners are used, install the selected nozzle using a Viton A 0-ring when stack temperatures are less than 260 °C (500 °F) and an asbestos string gasket when temperatures are higher. See APTD–0576 for details. Mark the probe with heat-resistant tape or by some other method to denote the proper distance into the stack or duct for each sampling point.

8.3.4 Set up the train as in Figure 5-1 of Method 5, 40 CFR part 60, appendix A, using (if necessary) a very light coat of silicone grease on all ground glass joints, greasing only the outer portion (see APTD–0576) to avoid possibility of contamination by the silicone grease. Subject to the approval of the Administrator, a glass cyclone may be used between the probe and filter holder when the total particulate catch is expected to exceed 100 mg or when water droplets are present in the stack gas.

8.3.5 Place crushed ice around the impingers.

8.4 Leak-check procedures.

8.4.1 Leak check of metering system shown in Figure 5-1 of Method 5, 40 CFR part 60, appendix A. That portion of the sampling train from the pump to the orifice meter should be leak-checked prior to initial use and after each shipment. Leakage after the pump will result in less volume being recorded than is actually sampled. The following procedure is suggested (see Figure 5–2 of Method 5, 40 CFR part 60, appendix A): Close the main valve on the meter box. Insert a one-hole rubber stopper with rubber tubing attached into the orifice exhaust pipe. Disconnect and vent the low side of the orifice manometer. Close off the low side orifice tap. Pressurize the system to 13 to 18 cm (5 to 7 in.) water column by blowing into the rubber tubing. Pinch off the tubing, and observe the manometer for 1 minute. A loss of pressure on the manometer indicates a leak in the meter box; leaks, if present, must be corrected.

8.4.2 Pretest leak check. A pretest leak-check is recommended but not required. If the pretest leak-check is conducted, the following procedure should be used.

8.4.2.1 After the sampling train has been assembled, turn on and set the filter and probe heating systems to the desired operating temperatures. Allow time for the temperatures to stabilize. If a Viton A 0-ring or other leak-free connection is used in assembling the probe nozzle to the probe liner, leak-check the train at the sampling site by plugging the nozzle and pulling a 380 mm (15 in.) Hg vacuum.

NOTE: A lower vacuum may be used, provided that it is not exceeded during the test.

8.4.2.2 If an asbestos string is used, do not connect the probe to the train during the leak check. Instead, leak-check the train by first plugging the inlet to the filter holder (cyclone, if applicable) and pulling a 380 mm (15 in.) Hg vacuum. (See NOTE in section

8.4.2.1 of this method). Then connect the probe to the train and perform the leak check at approximately 25 mm (1 in.) Hg vacuum; alternatively, the probe may be leak-checked with the rest of the sampling train, in one step, at 380 mm (15 in.) Hg vacuum. Leakage rates in excess of 4 percent of the average sampling rate or 0.00057 m^3/min (0.02 cfm), whichever is less, are unacceptable.

8.4.2.3 The following leak check instructions for the sampling train described in APTD–0576 and APTD–058l may be helpful. Start the pump with the bypass valve fully open and the coarse adjust valve completely closed. Partially open the coarse adjust valve and slowly close the bypass valve until the desired vacuum is reached. *Do not* reverse the direction of the bypass valve, as this will cause water to back up into the filter holder. If the desired vacuum is exceeded, either leak-check at this higher vacuum or end the leak check as shown below and start over.

8.4.2.4 When the leak check is completed, first slowly remove the plug from the inlet to the probe, filter holder, or cyclone (if applicable) and immediately turn off the vacuum pump. This prevents the water in the impingers from being forced backward into the filter holder and the silica gel from being entrained backward into the third impinger.

8.4.3 Leak checks during sample run. If, during the sampling run, a component (e.g., filter assembly or impinger) change becomes necessary, a leak check shall be conducted immediately before the change is made. The leak check shall be done according to the procedure outlined in section 8.4.2 of this method, except that it shall be done at a vacuum equal to or greater than the maximum value recorded up to that point in the test. If the leakage rate is found to be no greater than 0.00057 m^3/min (0.02 cfm) or 4 percent of the average sampling rate (whichever is less), the results are acceptable, and no correction will need to be applied to the total volume of dry gas metered; if, however, a higher leakage rate is obtained, either record the leakage rate and plan to correct the sample volume as shown in section 12.3 of this method or void the sample run.

NOTE: Immediately after component changes, leak checks are optional; if such leak checks are done, the procedure outlined in section 8.4.2 of this method should be used.

8.4.4 Post-test leak check. A leak check is mandatory at the conclusion of each sampling run. The leak check shall be performed in accordance with the procedures outlined in section 8.4.2 of this method, except that it shall be conducted at a vacuum equal to or greater than the maximum value reached during the sampling run. If the leakage rate is found to be no greater than 0.00057 m^3/min (0.02 cfm) or 4 percent of the average sampling rate (whichever is less), the results are acceptable, and no correction need be applied to the total volume of dry gas metered. If, however, a higher leakage rate is obtained, either record the leakage rate and correct the sample volume, as shown in section 12.4 of this method, or void the sampling run.

8.5 Sampling train operation. During the sampling run, maintain an isokinetic sampling rate (within 10 percent of true isokinetic unless otherwise specified by the Administrator) and a temperature around the filter of 120 14 °C (248 25 °F), or such other temperature as specified by an applicable subpart of the standards or approved by the Administrator.

8.5.1 For each run, record the data required on a data sheet such as the one shown in Figure 5–2 of Method 5, 40 CFR part 60, appendix A. Be sure to record the initial reading. Record the DGM readings at the beginning and end of each sampling time increment, when changes in flow rates are made, before and after each leak-check, and when sampling is halted. Take other readings indicated by Figure 5–2 of Method 5, 40 CFR part 60, appendix A at least once at each sample point during each time increment and additional readings when significant changes (20 percent variation in velocity head readings) necessitate additional adjustments in flow rate. Level and zero the manometer. Because the manometer level and zero may drift due to vibrations and temperature changes, make periodic checks during the traverse.

8.5.2 Clean the portholes prior to the test run to minimize the chance of sampling deposited material. To begin sampling, remove the nozzle cap and verify that the filter and probe heating systems are up to temperature and that the pitot tube and probe are properly positioned. Position the nozzle at the first traverse point with the tip pointing directly into the gas stream. Immediately start the pump and adjust the flow to isokinetic conditions. Nomographs are available, which aid in the rapid adjustment of the isokinetic sampling rate without excessive computations. These nomographs are designed for use when the Type S pitot tube coefficient (C_p) is 0.85 # 0.02 and the stack gas equivalent density (dry molecular weight) is 29 ± 4. APTD–0576 details the procedure for using the nomographs. If C_p and M_d are outside the above-stated ranges, do not use the nomographs unless appropriate steps (see Reference 7 in section 17.0 of this method) are taken to compensate for the deviations.

8.5.3 When the stack is under significant negative pressure (height of impinger stem), close the coarse adjust valve before inserting the probe into the stack to prevent water from backing into the filter holder. If necessary, the pump may be turned on with the coarse adjust valve closed.

8.5.4 When the probe is in position, block off the openings around the probe and porthole to prevent unrepresentative dilution of the gas stream.

8.5.5 Traverse the stack cross-section, as required by Method 1, 40 CFR part 60, appendix A or as specified by the Administrator, being careful not to bump the probe nozzle into the stack walls when sampling near the walls or when removing or inserting the probe through the portholes; this minimizes the chance of extracting deposited material.

8.5.6 During the test run, make periodic adjustments to keep the temperature around the filter holder at the proper level; add more ice and, if necessary, salt to maintain a temperature of less than 20 °C (68 °F) at the condenser/silica gel outlet. Also, periodically check the level and zero of the manometer.

8.5.7 If the pressure drop across the filter becomes too high, making isokinetic sampling difficult to maintain, the filter may be replaced in the midst of the sample run. It is recommended that another complete filter assembly be used rather than attempting to change the filter itself. Before a new filter assembly is installed, conduct a leak check (see section 8.4.3 of this method). The total PM weight shall include the summation of the filter assembly catches.

8.5.8 A single train shall be used for the entire sample run, except in cases where simultaneous sampling is required in two or more separate ducts or at two or more different locations within the same duct, or in cases where equipment failure necessitates a change of trains. In all other situations, the use of two or more trains will be subject to the approval of the Administrator.

NOTE: When two or more trains are used, separate analyses of the front-half and (if applicable) impinger catches from each train shall be performed, unless identical nozzle sizes were used in all trains, in which case the front-half catches from the individual trains may be combined (as may the impinger catches) and one analysis of the front-half catch and one analysis of the impinger catch may be performed.

8.5.9 At the end of the sample run, turn off the coarse adjust valve, remove the probe and nozzle from the stack, turn off the pump, record the final DGM reading, and then conduct a post-test leak check, as outlined in section 8.4.4 of this method. Also leak-check the pitot lines as described in section 8.1 of Method 2, 40 CFR part 60, appendix A. The lines must pass this leak check in order to validate the velocity head data.

8.6 Calculation of percent isokinetic. Calculate percent isokinetic (see Calculations, section 12.12 of this method) to determine whether a run was valid or another test run should be made. If there was difficulty in maintaining isokinetic rates because of source conditions, consult the Administrator for possible variance on the isokinetic rates.

8.7 Sample recovery.

8.7.1 Proper cleanup procedure begins as soon as the probe is removed from the stack at the end of the sampling period. Allow the probe to cool.

8.7.2 When the probe can be safely handled, wipe off all external PM near the tip of the probe nozzle and place a cap over it to prevent losing or gaining PM. Do not cap off the probe tip tightly while the sampling train is cooling down. This would create a vacuum in the filter holder, thus drawing water from the impingers into the filter holder.

8.7.3 Before moving the sample train to the cleanup site, remove the probe from the sample train, wipe off the silicone grease, and cap the open outlet of the probe. Be careful not to lose any condensate that might be present. Wipe off the silicone grease from the filter inlet where the probe was fastened and cap it. Remove the umbilical cord from the last impinger and cap the impinger. If a flexible line is used between the first impinger or condenser and the filter holder, disconnect the line at the filter holder and let any condensed water or liquid drain into the impingers or condenser. After wiping off the silicone grease, cap off the filter holder outlet and impinger inlet. Groundglass stoppers, plastic caps, or serum caps may be used to close these openings.

8.7.4 Transfer the probe and filter-impinger assembly to the cleanup area. This area should be clean and protected from the wind so that the chances of contaminating or losing the sample will be minimized.

8.7.5 Save a portion of the acetone and methylene chloride used for cleanup as blanks. Take 200 ml of each solvent directly from the wash bottle being used and place it in glass sample containers labeled ''acetone blank'' and ''methylene chloride blank,'' respectively.

8.7.6 Inspect the train prior to and during disassembly and note any abnormal conditions. Treat the samples as follows:

8.7.6.1 Container No. 1. Carefully remove the filter from the filter holder, and place it in its identified petri dish container. Use a pair of tweezers and/or clean disposable surgical gloves to handle the filter. If it is necessary to fold the filter, do so such that the PM cake is inside the fold. Using a dry nylon bristle brush and/or a sharp-edged blade, carefully transfer to the petri dish any PM and/or filter fibers that adhere to the filter holder gasket. Seal the container.

8.7.6.2 Container No. 2. Taking care to see that dust on the outside of the probe or other exterior surfaces does not get into the sample, quantitatively recover PM or any condensate from the probe nozzle, probe fitting, probe liner, and front half of the filter holder by washing these components with acetone

and placing the wash in a glass container. Perform the acetone rinse as follows:

8.7.6.2.1 Carefully remove the probe nozzle and clean the inside surface by rinsing with acetone from a wash bottle and brushing with a nylon bristle brush. Brush until the acetone rinse shows no visible particles, after which make a final rinse of the inside surface with acetone.

8.7.6.2.2 Brush and rinse the inside parts of the Swagelok fitting with acetone in a similar way until no visible particles remain.

8.7.6.2.3 Rinse the probe liner with acetone by tilting and rotating the probe while squirting acetone into its upper end so that all inside surfaces are wetted with acetone. Let the acetone drain from the lower end into the sample container. A funnel (glass or polyethylene) may be used to aid in transferring liquid washes to the container. Follow the acetone rinse with a probe brush. Hold the probe in an inclined position, squirt acetone into the upper end as the probe brush is being pushed with a twisting action through the probe, hold a sample container under the lower end of the probe, and catch any acetone and PM that is brushed from the probe. Run the brush through the probe three times or more until no visible PM is carried out with the acetone or until none remains in the probe liner on visual inspection. With stainless steel or other metal probes, run the brush through in the above-described manner at least six times, since metal probes have small crevices in which PM can be entrapped. Rinse the brush with acetone and quantitatively collect these washings in the sample container. After the brushing, make a final acetone rinse of the probe as described above.

8.7.6.2.4 It is recommended that two people clean the probe to minimize sample losses. Between sampling runs, keep brushes clean and protected from contamination.

8.7.6.2.5 After ensuring that all joints have been wiped clean of silicone grease, clean the inside of the front half of the filter holder by rubbing the surfaces with a nylon bristle brush and rinsing with acetone. Rinse each surface three times or more if needed to remove visible particulate. Make a final rinse of the brush and filter holder. Carefully rinse out the glass cyclone also (if applicable).

8.7.6.2.6 After rinsing the nozzle, probe, and front half of the filter holder with acetone, repeat the entire procedure with methylene chloride and save in a separate No. 2M container.

8.7.6.2.7 After acetone and methylene chloride washings and PM have been collected in the proper sample containers, tighten the lid on the sample containers so that acetone and methylene chloride will not leak out when it is shipped to the laboratory. Mark the height of the fluid level to determine whether leakage occurs during transport. Label each container to identify clearly its contents.

8.7.6.3 Container No. 3. Note the color of the indicating silica gel to determine whether it has been completely spent, and make a notation of its condition. Transfer the silica gel from the fourth impinger to its original container and seal the container. A funnel may make it easier to pour the silica gel without spilling. A rubber policeman may be used as an aid in removing the silica gel from the impinger. It is not necessary to remove the small amount of dust particles that may adhere to the impinger wall and are difficult to remove. Since the gain in weight is to be used for moisture calculations, do not use any water or other liquids to transfer the silica gel. If a balance is available in the field, follow the procedure for Container No. 3 in section 11.2.3 of this method.

8.7.6.4 Impinger water. Treat the impingers as follows:

8.7.6.4.1 Make a notation of any color or film in the liquid catch. Measure the liquid that is in the first three impingers to within 1 ml by using a graduated cylinder or by weighing it to within 0.5 g by using a balance (if one is available). Record the volume or weight of liquid present. This information is required to calculate the moisture content of the effluent gas.

8.7.6.4.2 Following the determination of the volume of liquid present, rinse the back half of the train with water, add it to the impinger catch, and store it in a container labeled 3W (water).

8.7.6.4.3 Following the water rinse, rinse the back half of the train with acetone to remove the excess water to enhance subsequent organic recovery with methylene chloride and quantitatively recover to a container labeled 3S (solvent) followed by at least three sequential rinsings with aliquots of methylene chloride. Quantitatively recover to the same container labeled 3S. Record separately the amount of both acetone and methylene chloride used to the nearest 1 ml or 0.5g.

NOTE: Because the subsequent analytical finish is gravimetric, it is okay to recover both solvents to the same container. This would not be recommended if other analytical finishes were required.

8.8 Sample transport. Whenever possible, containers should be shipped in such a way that they remain upright at all times.

9.0 Quality Control.

9.1 Miscellaneous quality control measures.

Section	Quality control measure	Effect
8.4, 10.1–10.6.	Sampling and equipment leak check and calibration.	Ensure accurate measurement of stack gas flow rate, sample volume.

9.2 Volume metering system checks. The following quality control procedures are suggested to check the volume metering system calibration values at the field test site prior to sample collection. These procedures are optional.

9.2.1 Meter orifice check. Using the calibration data obtained during the calibration procedure described in section 10.3 of this method, determine the ΔH_a for the metering system orifice. The ΔH_a is the orifice pressure differential in units of in. H_20 that correlates to 0.75 cfm of air at 528 °R and 29.92 in. Hg. The ΔH_a is calculated as follows:

$$\Delta H_a = 0..0319\ \Delta H \frac{T_m \Theta^2}{P_{bar} Y^2 V_m^2}$$

Where

0.0319 = (0.0567 in. Hg/ °R)(0.75 cfm)^2;

ΔH = Average pressure differential across the orifice meter, in. H_20;

T_m = Absolute average DGM temperature, °R;

Θ = Total sampling time, min;

P_{bar} = Barometric pressure, in. Hg;

Y = DGM calibration factor, dimensionless;

V_m = Volume of gas sample as measured by DGM, dcf.

9.2.1.1 Before beginning the field test (a set of three runs usually constitutes a field test), operate the metering system (i.e., pump, volume meter, and orifice) at the ΔH_a pressure differential for 10 minutes. Record the volume collected, the DGM temperature, and the barometric pressure. Calculate a DGM calibration check value, Y_c, as follows:

$$Y_c = \frac{10}{V_m}\left[\frac{0.0319\ T_m}{P_{bar}}\right]^{\frac{1}{2}}$$

Where

Y_c = DGM calibration check value, dimensionless;

10 = Run time, min.

9.2.1.2 Compare the Y_c value with the dry gas meter calibration factor Y to determine that: $0.97\ Y < Y_c < 1.03Y$. If the Y_c value is not within this range, the volume metering system should be investigated before beginning the test.

9.2.2 Calibrated critical orifice. A calibrated critical orifice, calibrated against a wet test meter or spirometer and designed to be inserted at the inlet of the sampling meter box, may be used as a quality control check by following the procedure of section 16.2 of this method.

10.0 Calibration and Standardization.

NOTE: Maintain a laboratory log of all calibrations.

10.1 Probe nozzle. Probe nozzles shall be calibrated before their initial use in the field. Using a micrometer, measure the ID of the nozzle to the nearest 0.025 mm (0.001 in.). Make three separate measurements using different diameters each time, and obtain the average of the measurements. The difference between the high and low numbers shall not exceed 0.1 mm (0.004 in.). When nozzles become nicked, dented, or corroded, they shall be reshaped, sharpened, and recalibrated before use. Each nozzle shall be permanently and uniquely identified.

10.2 Pitot tube assembly. The Type S pitot tube assembly shall be calibrated according to the procedure outlined in section 10.1 of Method 2, 40 CFR part 60, appendix A.

10.3 Metering system.

10.3.1 Calibration prior to use. Before its initial use in the field, the metering system shall be calibrated as follows: Connect the metering system inlet to the outlet of a wet test meter that is accurate to within 1 percent. Refer to Figure 5–5 of Method 5, 40 CFR part 60, appendix A. The wet test meter should have a capacity of 30 liters/revolution (1 ft^3/rev). A spirometer of 400 liters (14 ft^3) or more capacity, or equivalent, may be used for this calibration, although a wet test meter is usually more practical. The wet test meter should be periodically calibrated with a spirometer or a liquid displacement meter to ensure the accuracy of the wet test meter. Spirometers or wet test meters of other sizes may be used, provided that the specified accuracies of the procedure are maintained. Run the metering system pump for about 15 minutes with the orifice manometer indicating a median reading, as expected in field use, to allow the pump to warm up and to permit the interior surface of the wet test meter to be thoroughly wetted. Then, at each of a minimum of three orifice manometer settings, pass an exact quantity of gas through the wet test meter and note the gas volume indicated by the DGM. Also note the

barometric pressure and the temperatures of the wet test meter, the inlet of the DGM, and the outlet of the DGM. Select the highest and lowest orifice settings to bracket the expected field operating range of the orifice. Use a minimum volume of 0.15 m^3 (5 cf) at all orifice settings. Record all the data on a form similar to Figure 5–6 of Method 5, 40 CFR part 60, appendix A, and calculate Y (the DGM calibration factor) and ΔH_a (the orifice calibration factor) at each orifice setting, as shown on Figure 5–6 of Method 5, 40 CFR part 60, appendix A. Allowable tolerances for individual Y and ΔH_a values are given in Figure 5–6 of Method 5, 40 CFR part 60, appendix A. Use the average of the Y values in the calculations in section 12 of this method.

10.3.1.1 Before calibrating the metering system, it is suggested that a leak check be conducted. For metering systems having diaphragm pumps, the normal leak check procedure will not detect leakages within the pump. For these cases the following leak check procedure is suggested: make a 10-minute calibration run at 0.00057 m^3/min (0.02 cfm); at the end of the run, take the difference of the measured wet test meter and DGM volumes; divide the difference by 10 to get the leak rate. The leak rate should not exceed 0.00057 m^3/min (0.02 cfm).

10.3.2 Calibration after use. After each field use, the calibration of the metering system shall be checked by performing three calibration runs at a single, intermediate orifice setting (based on the previous field test) with the vacuum set at the maximum value reached during the test series. To adjust the vacuum, insert a valve between the wet test meter and the inlet of the metering system. Calculate the average value of the DGM calibration factor. If the value has changed by more than 5 percent, recalibrate the meter over the full range of orifice settings, as previously detailed.

NOTE: Alternative procedures, e.g., rechecking the orifice meter coefficient, may be used, subject to the approval of the Administrator.

10.3.3 Acceptable variation in calibration. If the DGM coefficient values obtained before and after a test series differ by more than 5 percent, either the test series shall be voided or calculations for the test series shall be performed using whichever meter coefficient value (i.e., before or after) gives the lower value of total sample volume.

10.4 Probe heater calibration. Use a heat source to generate air heated to selected temperatures that approximate those expected to occur in the sources to be sampled. Pass this air through the probe at a typical sample flow rate while measuring the probe inlet and outlet temperatures at various probe heater settings. For each air temperature generated, construct a graph of probe heating system setting versus probe outlet temperature. The procedure outlined in APTD–0576 can also be used. Probes constructed according to APTD–0581 need not be calibrated if the calibration curves in APTD–0576 are used. Also, probes with outlet temperature monitoring capabilities do not require calibration.

NOTE: The probe heating system shall be calibrated before its initial use in the field.

10.5 Temperature sensors. Use the procedure in section 10.3 of Method 2, 40 CFR part 60, appendix A to calibrate in-stack temperature sensors. Dial thermometers, such as are used for the DGM and condenser outlet, shall be calibrated against mercury-in-glass thermometers.

10.6 Barometer. Calibrate against a mercury barometer.

11.0 Analytical Procedure.

11.1 Record the data required on a sheet such as the one shown in Figure 315–1 of this method.

11.2 Handle each sample container as follows:

11.2.1 Container No. 1.

11.2.1.1 PM analysis. Leave the contents in the shipping container or transfer the filter and any loose PM from the sample container to a tared glass weighing dish. Desiccate for 24 hours in a desiccator containing anhydrous calcium sulfate. Weigh to a constant weight and report the results to the nearest 0.1 mg. For purposes of this section, the term ''constant weight'' means a difference of no more than 0.5 mg or 1 percent of total weight less tare weight, whichever is greater, between two consecutive weighings, with no less than 6 hours of desiccation time between weighings (overnight desiccation is a common practice). If a third weighing is required and it agrees within ±0.5 mg, then the results of the second weighing should be used. For quality assurance purposes, record and report each individual weighing; if more than three weighings are required, note this in the results for the subsequent MCEM results.

11.2.1.2 MCEM analysis. Transfer the filter and contents quantitatively into a beaker. Add 100 ml of methylene chloride and cover with aluminum foil. Sonicate for 3 minutes then allow to stand for 20 minutes. Set up the filtration apparatus. Decant the solution into a clean Buchner fritted funnel. Immediately pressure filter the solution through the tube into another clean, dry beaker. Continue decanting and pressure filtration until all the solvent is transferred. Rinse the beaker and filter with 10 to 20 ml methylene chloride, decant into the Buchner fritted funnel and pressure filter. Place the beaker on a low-temperature hot plate (maximum 40 °C) and slowly evaporate almost to

dryness. Transfer the remaining last few milliliters of solution quantitatively from the beaker (using at least three aliquots of methylene chloride rinse) to a tared clean dry aluminum dish and evaporate to complete dryness. Remove from heat once solvent is evaporated. Reweigh the dish after a 30-minute equilibrium in the balance room and determine the weight to the nearest 0.1 mg. Conduct a methylene chloride blank run in an identical fashion.

11.2.2 Container No. 2.

11.2.2.1 PM analysis. Note the level of liquid in the container, and confirm on the analysis sheet whether leakage occurred during transport. If a noticeable amount of leakage has occurred, either void the sample or use methods, subject to the approval of the Administrator, to correct the final results. Measure the liquid in this container either volumetrically to ±1 ml or gravimetrically to 1±0.5 g. Transfer the contents to a tared 250 ml beaker and evaporate to dryness at ambient temperature and pressure. Desiccate for 24 hours, and weigh to a constant weight. Report the results to the nearest 0.1 mg.

11.2.2.2 MCEM analysis. Add 25 ml methylene chloride to the beaker and cover with aluminum foil. Sonicate for 3 minutes then allow to stand for 20 minutes; combine with contents of Container No. 2M and pressure filter and evaporate as described for Container 1 in section 11.2.1.2 of this method.

Notes for MCEM Analysis

1. Light finger pressure only is necessary on 24/40 adaptor. A Chemplast adapter #15055–240 has been found satisfactory.

2. Avoid aluminum dishes made with fluted sides, as these may promote solvent ''creep,'' resulting in possible sample loss.

3. If multiple samples are being run, rinse the Buchner fritted funnel twice between samples with 5 ml solvent using pressure filtration. After the second rinse, continue the flow of air until the glass frit is completely dry. Clean the Buchner fritted funnels thoroughly after filtering five or six samples.

11.2.3 Container No. 3. Weigh the spent silica gel (or silica gel plus impinger) to the nearest 0.5 g using a balance. This step may be conducted in the field.

11.2.4 Container 3W (impinger water).

11.2.4.1 MCEM analysis. Transfer the solution into a 1,000 ml separatory funnel quantitatively with methylene chloride washes. Add enough solvent to total approximately 50 ml, if necessary. Shake the funnel for 1 minute, allow the phases to separate, and drain the solvent layer into a 250 ml beaker. Repeat the extraction twice. Evaporate with low heat (less than 40 °C) until near dryness. Transfer the remaining few milliliters of solvent quantitatively with small solvent washes into a clean, dry, tared aluminum dish and evaporate to dryness. Remove from heat once solvent is evaporated. Reweigh the dish after a 30-minute equilibration in the balance room and determine the weight to the nearest 0.1 mg.

11.2.5 Container 3S (solvent).

11.2.5.1 MCEM analysis. Transfer the mixed solvent to 250 ml beaker(s). Evaporate and weigh following the procedures detailed for container 3W in section 11.2.4 of this method.

11.2.6 Blank containers. Measure the distilled water, acetone, or methylene chloride in each container either volumetrically or gravimetrically. Transfer the ''solvent'' to a tared 250 ml beaker, and evaporate to dryness at ambient temperature and pressure. (Conduct a solvent blank on the distilled deionized water blank in an identical fashion to that described in section 11.2.4.1 of this method.) Desiccate for 24 hours, and weigh to a constant weight. Report the results to the nearest 0.1 mg.

NOTE: The contents of Containers No. 2, 3W, and 3M as well as the blank containers may be evaporated at temperatures higher than ambient. If evaporation is done at an elevated temperature, the temperature must be below the boiling point of the solvent; also, to prevent ''bumping,'' the evaporation process must be closely supervised, and the contents of the beaker must be swirled occasionally to maintain an even temperature. Use extreme care, as acetone and methylene chloride are highly flammable and have a low flash point.

12.0 Data Analysis and Calculations.

12.1 Carry out calculations, retaining at least one extra decimal figure beyond that of the acquired data. Round off figures after the final calculation. Other forms of the equations may be used as long as they give equivalent results.

12.2 Nomenclature.

A_n = Cross-sectional area of nozzle, m^3 (ft^3).

B_{ws} = Water vapor in the gas stream, proportion by volume.

C_a = Acetone blank residue concentration, mg/g.

C_s = Concentration of particulate matter in stack gas, dry basis, corrected to standard conditions, g/dscm (g/dscf).

I = Percent of isokinetic sampling.

L_a = Maximum acceptable leakage rate for either a pretest leak check or for a leak check following a component change; equal to 0.00057 m^3/min (0.02 cfm) or 4 percent of the average sampling rate, whichever is less.

L_i = Individual leakage rate observed during the leak check conducted prior to the ''i^{th}'' component change (I = 1, 2, 3...n), m^3/min (cfm).

L_p = Leakage rate observed during the post-test leak check, m^3/min (cfm).

m_a = Mass of residue of acetone after evaporation, mg.
m_n = Total amount of particulate matter collected, mg.
M_w = Molecular weight of water, 18.0 g/g-mole (18.0 lb/lb-mole).
P_{bar} = Barometric pressure at the sampling site, mm Hg (in Hg).
P_s = Absolute stack gas pressure, mm Hg (in. Hg).
P_{std} = Standard absolute pressure, 760 mm Hg (29.92 in. Hg).
R = Ideal gas constant, 0.06236 [(mm Hg)(m^3)]/[(°K) (g-mole)] '61' 21.85 [(in. Hg)(ft^3)]/[(°R)(lb-mole)'61'].
T_m = Absolute average dry gas meter (DGM) temperature (see Figure 5–2 of Method 5, 40 CFR part 60, appendix A), °K (°R).
T_s = Absolute average stack gas temperature (see Figure 5–2 of Method 5, 40 CFR part 60, appendix A), °K(°R).
T_{std} = Standard absolute temperature, 293 °K (528 °R).
V_a = Volume of acetone blank, ml.
V_{aw} = Volume of acetone used in wash, ml.
V_t = Volume of methylene chloride blank, ml.
V_{tw} = Volume of methylene chloride used in wash, ml.
V_{lc} = Total volume liquid collected in impingers and silica gel (see Figure 5–3 of Method 5, 40 CFR part 60, appendix A), ml.
V_m = Volume of gas sample as measured by dry gas meter, dcm (dcf).
$V_{m(std)}$ = Volume of gas sample measured by the dry gas meter, corrected to standard conditions, dscm (dscf).
$V_{w(std)}$ = Volume of water vapor in the gas sample, corrected to standard conditions, scm (scf).
V_s = Stack gas velocity, calculated by Equation 2–9 in Method 2, 40 CFR part 60, appendix A, using data obtained from Method 5, 40 CFR part 60, appendix A, m/sec (ft/sec).
W_a = Weight of residue in acetone wash, mg.
Y = Dry gas meter calibration factor.
ΔH = Average pressure differential across the orifice meter (see Figure 5–2 of Method 5, 40 CFR part 60, appendix A), mm H_2O (in H_2O).
ρ_a = Density of acetone, 785.1 mg/ml (or see label on bottle).
ρ_w = Density of water, 0.9982 g/ml (0.002201 lb/ml).
ρ_t = Density of methylene chloride, 1316.8 mg/ml (or see label on bottle).
Θ = Total sampling time, min.
Θ_1 = Sampling time interval, from the beginning of a run until the first component change, min.
Θ_1 = Sampling time interval, between two successive component changes, beginning with the interval between the first and second changes, min.
Θ_p = Sampling time interval, from the final (n^{th}) component change until the end of the sampling run, min.
13.6 = Specific gravity of mercury.
60 = Sec/min.
100 = Conversion to percent.

12.3 Average dry gas meter temperature and average orifice pressure drop. See data sheet (Figure 5–2 of Method 5, 40 CFR part 60, appendix A).

12.4 Dry gas volume. Correct the sample volume measured by the dry gas meter to standard conditions (20 °C, 760 mm Hg or 68 °F, 29.92 in Hg) by using Equation 315–1.

$$V = V_m Y \frac{T_{std}\left(P_{bar} + \frac{\Delta H}{13.6}\right)}{T_m P_{std}} = V = K_1 V_m Y \frac{P_{bar} + \left(\frac{\Delta H}{13.6}\right)}{T_m} \qquad \text{Eq. 315-1}$$

Where
K_1 = 0.3858 °K/mm Hg for metric units,
= 17.64 °R/in Hg for English units.

NOTE: Equation 315–1 can be used as written unless the leakage rate observed during any of the mandatory leak checks (i.e., the post-test leak check or leak checks conducted prior to component changes) exceeds L_a. If L_p or L_i exceeds L_a, Equation 315–1 must be modified as follows:

(a) Case I. No component changes made during sampling run. In this case, replace V_m in Equation 315–1 with the expression:

$[V_m—(L_p—L_a)\ \Theta]$

(b) Case II. One or more component changes made during the sampling run. In this case, replace V_m in Equation 315–1 by the expression:

$$\left[V_m - \left(L_1 - L_a\right)\Theta_1 - \sum_{i=2}^{n}\left(L_i - L_a\right)\Theta_i - \left(L_p - L_a\right)\Theta_p\right]$$

and substitute only for those leakage rates (L_i or L_p) which exceed L_a.

12.5 Volume of water vapor condensed.

$$V_{w(std)} = V_{1c}\frac{\rho_w R T_{std}}{M_w P_{std}} = K_2 V_{1c} \qquad \text{Eq. 315-2}$$

Where

K_2 = 0.001333 m^3/ml for metric units;
= 0.04706 ft^3/ml for English units.

12.6 Moisture content.

$$B_{ws} = \frac{V_{w(std)}}{V_{m(std)} + V_{w(std)}} \qquad \text{Eq. 315-3}$$

NOTE: In saturated or water droplet-laden gas streams, two calculations of the moisture content of the stack gas shall be made, one from the impinger analysis (Equation 315-3), and a second from the assumption of saturated conditions. The lower of the two values of B_{ws} shall be considered correct. The procedure for determining the moisture content based upon assumption of saturated conditions is given in section 4.0 of Method 4, 40 CFR part 60, appendix A. For the purposes of this method, the average stack gas temperature from Figure 5–2 of Method 5, 40 CFR part 60, appendix A may be used to make this determination, provided that the accuracy of the in-stack temperature sensor is ±1 °C (2 °F).

12.7 Acetone blank concentration.

$$C_a = \frac{M_a}{V_a \rho_a} \qquad \text{Eq. 315-4}$$

12.8 Acetone wash blank.

$W_a = C_a V_{aw} \rho a$ *Eq. 315–5*

12.9 Total particulate weight. Determine the total PM catch from the sum of the weights obtained from Containers 1 and 2 less the acetone blank associated with these two containers (see Figure 315–1).

NOTE: Refer to section 8.5.8 of this method to assist in calculation of results involving two or more filter assemblies or two or more sampling trains.

12.10 Particulate concentration.

$c_s = K_3\, m_n/V_{m(std)}$ Eq. 315–6

where

K = 0.001 g/mg for metric units;
= 0.0154 gr/mg for English units.

12.11 Conversion factors.

From	To	Multiply by
ft^3	m^3	0.02832
gr	mg	64.80004
gr/ft^3	mg/m^3	2288.4
mg	g	0.001
gr	lb	1.429×10^{-4}

12.12 Isokinetic variation.

12.12.1 Calculation from raw data.

$$I = \frac{100\, T_s \left| K_4 V_{1c} + \left(\frac{V_m Y}{T_m}\right)\left(P_{bar} + \frac{\Delta H}{13.6}\right)\right.}{60\, \Theta\, V_s P_s A_n} \qquad \text{Eq. 315-7}$$

where

K_4 = 0.003454 [(mm Hg)(m^3)]/[(ml)(°K)] for metric units;
= 0.002669 [(in Hg)(ft^3)]/[(ml)(°R)] for English units.

12.12.2 Calculation from intermediate values.

$$I = \frac{T_s V_{m(std)} P_{std} 100}{T_{std} V_s \Theta A_n P_s 60 \left(1 - B_{ws}\right)} = K_5 \frac{T_s V_{m(std)}}{P_s V_s A_n \Theta \left(1 - B_{ws}\right)} \qquad \text{Eq. 315-8}$$

where

K_5 = 4.320 for metric units;
= 0.09450 for English units.

12.12.3 Acceptable results. If 90 percent ≤ I ≤ 110 percent, the results are acceptable. If the PM or MCEM results are low in comparison to the standard, and ''I'' is over 110 percent or less than 90 percent, the Administrator may opt to accept the results. Reference 4 in the Bibliography may be used to make acceptability judgments. If ''I'' is judged to be unacceptable, reject the results, and repeat the test.

12.13 Stack gas velocity and volumetric flow rate. Calculate the average stack gas velocity and volumetric flow rate, if needed, using data obtained in this method and the equations in sections 5.2 and 5.3 of Method 2, 40 CFR part 60, appendix A.

12.14 MCEM results. Determine the MCEM concentration from the results from Containers 1, 2, 2M, 3W, and 3S less the acetone, methylene chloride, and filter blanks value as determined in the following equation:

$m_{mcem} = Sm_{total} - w_a - w_t - f_b$

13.0 Method Performance. [Reserved]

14.0 Pollution Prevention. [Reserved]

15.0 Waste Management. [Reserved]

16.0 Alternative Procedures.

16.1 Dry gas meter as a calibration standard. A DGM may be used as a calibration standard for volume measurements in place of the wet test meter specified in section 16.1 of this method, provided that it is calibrated initially and recalibrated periodically as follows:

16.1.1 Standard dry gas meter calibration.

16.1.1.1. The DGM to be calibrated and used as a secondary reference meter should be of high quality and have an appropriately sized capacity, e.g., 3 liters/rev (0.1 ft^3/rev). A spirometer (400 liters or more capacity), or equivalent, may be used for this calibration, although a wet test meter is usually more practical. The wet test meter should have a capacity of 30 liters/rev (1 ft^3/rev) and be capable of measuring volume to within 1.0 percent; wet test meters should be checked against a spirometer or a liquid displacement meter to ensure the accuracy of the wet test meter. Spirometers or wet test meters of other sizes may be used, provided that the specified accuracies of the procedure are maintained.

16.1.1.2 Set up the components as shown in Figure 5–7 of Method 5, 40 CFR part 60, appendix A. A spirometer, or equivalent, may be used in place of the wet test meter in the system. Run the pump for at least 5 minutes at a flow rate of about 10 liters/min (0.35 cfm) to condition the interior surface of the wet test meter. The pressure drop indicated by the manometer at the inlet side of the DGM should be minimized (no greater than 100 mm H_2O [4 in. H_2O] at a flow rate of 30 liters/min [1 cfm]). This can be accomplished by using large-diameter tubing connections and straight pipe fittings.

16.1.1.3 Collect the data as shown in the example data sheet (see Figure 5–8 of Method 5, 40 CFR part 60, appendix A). Make triplicate runs at each of the flow rates and at no less than five different flow rates. The range of flow rates should be between 10 and 34 liters/min (0.35 and 1.2 cfm) or over the expected operating range.

16.1.1.4 Calculate flow rate, Q, for each run using the wet test meter volume, V_w, and the run time, q. Calculate the DGM coefficient, Y_{ds}, for each run. These calculations are as follows:

$$Q = K_1 \frac{P_{bar} V_w}{\left(t_w + t_{std}\right)\Theta} \qquad \text{Eq. 315-9}$$

$$Y_{ds} = \frac{V_w \left(T_{ds} + T_{std}\right) P_{bar}}{V_{ds} \left(T_w + T_{std}\right)\left(P_{bar} + \frac{\Delta p}{13.6}\right)} \qquad \text{Eq. 315-10}$$

Where

K_1 = 0.3858 for international system of units (SI); 17.64 for English units;

P_{bar} = Barometric pressure, mm Hg (in Hg);

V_w = Wet test meter volume, liter (ft^3);

t_w = Average wet test meter temperature, °C (°F);

t_{std} = 273 °C for SI units; 460'F for English units;
Θ = Run time, min;
t_{ds} = Average dry gas meter temperature, °C (°F);
V_{ds} = Dry gas meter volume, liter (ft^3);
Δp = Dry gas meter inlet differential pressure, mm H_2O (in H_2O).

16.1.1.5 Compare the three Y_{ds} values at each of the flow rates and determine the maximum and minimum values. The difference between the maximum and minimum values at each flow rate should be no greater than 0.030. Extra sets of triplicate runs may be made in order to complete this requirement. In addition, the meter coefficients should be between 0.95 and 1.05. If these specifications cannot be met in three sets of successive triplicate runs, the meter is not suitable as a calibration standard and should not be used as such. If these specifications are met, average the three Y_{ds} values at each flow rate resulting in five average meter coefficients, Y_{ds}.

16.1.1.6 Prepare a curve of meter coefficient, Y_{ds}, versus flow rate, Q, for the DGM. This curve shall be used as a reference when the meter is used to calibrate other DGMs and to determine whether recalibration is required.

16.1.2 Standard dry gas meter recalibration.

16.1.2.1 Recalibrate the standard DGM against a wet test meter or spirometer annually or after every 200 hours of operation, whichever comes first. This requirement is valid provided the standard DGM is kept in a laboratory and, if transported, cared for as any other laboratory instrument. Abuse to the standard meter may cause a change in the calibration and will require more frequent recalibrations.

16.1.2.2 As an alternative to full recalibration, a two-point calibration check may be made. Follow the same procedure and equipment arrangement as for a full recalibration, but run the meter at only two flow rates (suggested rates are 14 and 28 liters/min [0.5 and 1.0 cfm]). Calculate the meter coefficients for these two points, and compare the values with the meter calibration curve. If the two coefficients are within 1.5 percent of the calibration curve values at the same flow rates, the meter need not be recalibrated until the next date for a recalibration check.

6.2 Critical orifices as calibration standards. Critical orifices may be used as calibration standards in place of the wet test meter specified in section 10.3 of this method, provided that they are selected, calibrated, and used as follows:

16.2.1 Selection of critical orifices.

16.2.1.1 The procedure that follows describes the use of hypodermic needles or stainless steel needle tubing that has been found suitable for use as critical orifices. Other materials and critical orifice designs may be used provided the orifices act as true critical orifices; i.e., a critical vacuum can be obtained, as described in section 7.2.2.2.3 of Method 5, 40 CFR part 60, appendix A. Select five critical orifices that are appropriately sized to cover the range of flow rates between 10 and 34 liters/min or the expected operating range. Two of the critical orifices should bracket the expected operating range. A minimum of three critical orifices will be needed to calibrate a Method 5 DGM; the other two critical orifices can serve as spares and provide better selection for bracketing the range of operating flow rates. The needle sizes and tubing lengths shown in Table 315–1 give the approximate flow rates indicated in the table.

16.2.1.2 These needles can be adapted to a Method 5 type sampling train as follows: Insert a serum bottle stopper, 13 x 20 mm sleeve type, into a 0.5 in Swagelok quick connect. Insert the needle into the stopper as shown in Figure 5–9 of Method 5, 40 CFR part 60, appendix A.

16.2.2 Critical orifice calibration. The procedure described in this section uses the Method 5 meter box configuration with a DGM as described in section 6.1.1.9 of this method to calibrate the critical orifices. Other schemes may be used, subject to the approval of the Administrator.

16.2.2.1 Calibration of meter box. The critical orifices must be calibrated in the same configuration as they will be used; i.e., there should be no connections to the inlet of the orifice.

16.2.2.1.1 Before calibrating the meter box, leak-check the system as follows: Fully open the coarse adjust valve and completely close the bypass valve. Plug the inlet. Then turn on the pump and determine whether there is any leakage. The leakage rate shall be zero; i.e., no detectable movement of the DGM dial shall be seen for 1 minute.

16.2.2.1.2 Check also for leakages in that portion of the sampling train between the pump and the orifice meter. See section 5.6 of Method 5, 40 CFR part 60, appendix A for the procedure; make any corrections, if necessary. If leakage is detected, check for cracked gaskets, loose fittings, worn 0-rings, etc. and make the necessary repairs.

16.2.2.1.3 After determining that the meter box is leakless, calibrate the meter box according to the procedure given in section 5.3 of Method 5, 40 CFR part 60, appendix A. Make sure that the wet test meter meets the requirements stated in section 7.1.1.1 of Method 5, 40 CFR part 60, appendix A. Check the water level in the wet test meter. Record the DGM calibration factor, Y.

16.2.2.2 Calibration of critical orifices. Set up the apparatus as shown in Figure 5–10 of Method 5, 40 CFR part 60, appendix A.

16.2.2.2.1 Allow a warm-up time of 15 minutes. This step is important to equilibrate

the temperature conditions through the DGM.

16.2.2.2.2 Leak-check the system as in section 7.2.2.1.1 of Method 5, 40 CFR part 60, appendix A. The leakage rate shall be zero.

16.2.2.2.3 Before calibrating the critical orifice, determine its suitability and the appropriate operating vacuum as follows: turn on the pump, fully open the coarse adjust valve, and adjust the bypass valve to give a vacuum reading corresponding to about half of atmospheric pressure. Observe the meter box orifice manometer reading, DH. Slowly increase the vacuum reading until a stable reading is obtained on the meter box orifice manometer. Record the critical vacuum for each orifice. Orifices that do not reach a critical value shall not be used.

16.2.2.2.4 Obtain the barometric pressure using a barometer as described in section 6.1.2 of this method. Record the barometric pressure, P_{bar}, in mm Hg (in. Hg).

16.2.2.2.5 Conduct duplicate runs at a vacuum of 25 to 50 mm Hg (1 to 2 in. Hg) above the critical vacuum. The runs shall be at least 5 minutes each. The DGM volume readings shall be in increments of complete revolutions of the DGM. As a guideline, the times should not differ by more than 3.0 seconds (this includes allowance for changes in the DGM temperatures) to achieve ±0.5 percent in K′. Record the information listed in Figure 5–11 of Method 5, 40 CFR part 60, appendix A.

16.2.2.2.6 Calculate K′ using Equation 315–11.

$$K' = \frac{K_1 V_m Y \left(P_{bar} + \frac{\Delta H}{13.6}\right) T_{amb}^{\frac{1}{2}}}{P_{bar} T_m \Theta} \qquad \text{Eq. 315-11}$$

where

K′ = Critical orifice coefficient, $[m^3)(°K)^{1/2}]/[(mm\ Hg)(min)]$ '61' $[(ft^3)(°R)^{1/2})]/[(in.\ Hg)(min)]$'61'

T_{amb} = Absolute ambient temperature, °K (°R).

16.2.2.2.7 Average the K′ values. The individual K' values should not differ by more than ±0.5 percent from the average.

16.2.3 Using the critical orifices as calibration standards.

16.2.3.1 Record the barometric pressure.

16.2.3.2 Calibrate the metering system according to the procedure outlined in sections 7.2.2.2.1 to 7.2.2.2.5 of Method 5, 40 CFR part 60, appendix A. Record the information listed in Figure 5–12 of Method 5, 40 CFR part 60, appendix A.

16.2.3.3 Calculate the standard volumes of air passed through the DGM and the critical orifices, and calculate the DGM calibration factor, Y, using the equations below:

$V_{m(std)} = K_1\ V_m\ [P_{bar} + (\Delta H/13.6)]/T_m$ *Eq. 315–12*

$V_{cr(std)} = K'\ (P_{bar}\ \Theta)/T_{amb}^{1/2}$ *Eq. 315–13*

$Y = V_{cr(std)}/V_{m(std)}$ *Eq. 315–14*

where

$V_{cr(std)}$ = Volume of gas sample passed through the critical orifice, corrected to standard conditions, dscm (dscf).

K′ = 0.3858 °K/mm Hg for metric units
= 17.64 °R/in Hg for English units.

16.2.3.4 Average the DGM calibration values for each of the flow rates. The calibration factor, Y, at each of the flow rates should not differ by more than ±2 percent from the average.

16.2.3.5 To determine the need for recalibrating the critical orifices, compare the DGM Y factors obtained from two adjacent orifices each time a DGM is calibrated; for example, when checking orifice 13/2.5, use orifices 12/10.2 and 13/5.1. If any critical orifice yields a DGM Y factor differing by more than 2 percent from the others, recalibrate the critical orifice according to section 7.2.2.2 of Method 5, 40 CFR part 60, appendix A.

17.0 References.

1. Addendum to Specifications for Incinerator Testing at Federal Facilities. PHS, NCAPC. December 6, 1967.

2. Martin, Robert M. Construction Details of Isokinetic Source-Sampling Equipment. Environmental Protection Agency. Research Triangle Park, NC. APTD–0581. April 1971.

3. Rom, Jerome J. Maintenance, Calibration, and Operation of Isokinetic Source Sampling Equipment. Environmental Protection Agency. Research Triangle Park, NC. APTD–0576. March 1972.

4. Smith, W.S., R.T. Shigehara, and W.F. Todd. A Method of Interpreting Stack Sampling Data. Paper Presented at the 63rd Annual Meeting of the Air Pollution Control Association, St. Louis, MO. June 14–19, 1970.

5. Smith, W.S., et al. Stack Gas Sampling Improved and Simplified With New Equipment. APCA Paper No. 67–119. 1967.

6. Specifications for Incinerator Testing at Federal Facilities. PHS, NCAPC. 1967.

7. Shigehara, R.T. Adjustment in the EPA Nomograph for Different Pitot Tube Coefficients and Dry Molecular Weights. Stack Sampling News *2*:4–11. October 1974.

8. Vollaro, R.F. A Survey of Commercially Available Instrumentation for the Measurement of Low-Range Gas Velocities. U.S. Environmental Protection Agency, Emission Measurement Branch. Research Triangle Park, NC. November 1976 (unpublished paper).

9. Annual Book of ASTM Standards. Part 26. Gaseous Fuels; Coal and Coke; Atmospheric Analysis. American Society for Testing and Materials. Philadelphia, PA. 1974. pp. 617–622.

10. Felix, L.G., G.I. Clinard, G.E. Lacy, and J.D. McCain. Inertial Cascade Impactor Substrate Media for Flue Gas Sampling. U.S. Environmental Protection Agency. Research Triangle Park, NC 27711. Publication No. EPA–600/7–77–060. June 1977. 83 p.

11. Westlin, P.R., and R.T. Shigehara. Procedure for Calibrating and Using Dry Gas Volume Meters as Calibration Standards. Source Evaluation Society Newsletter. *3*(1):17–30. February 1978.

12. Lodge, J.P., Jr., J.B. Pate, B.E. Ammons, and G.A. Swanson. The Use of Hypodermic Needles as Critical Orifices in Air Sampling. J. Air Pollution Control Association. *16*:197–200. 1966.

18.0 Tables, Diagrams, Flowcharts, and Validation Data

TABLE 315–1. FLOW RATES FOR VARIOUS NEEDLE SIZES AND TUBE LENGTHS.

Gauge/length (cm)	Flow rate (liters/min)	Gauge/length (cm)	Flow rate (liters/min)
12/7.6	32.56	14/2.5	19.54
12/10.2	30.02	14/5.1	17.27
13/2.5	25.77	14/7.6	16.14
13/5.1	23.50	15/3.2	14.16
13/7.6	22.37	15/7.6	11.61
13/10.2	20.67	115/10.2	10.48

FIGURE 315–1. PARTICULATE AND MCEM ANALYSES

Particulate Analysis

Plant	
Date	
Run No.	
Filter No.	
Amount liquid lost during transport	
Acetone blank volume (ml)	
Acetone blank concentration (Eq. 315–4) (mg/mg)	
Acetone wash blank (Eq. 315–5) (mg)	

	Final weight (mg)	Tare weight (mg)	Weight gain (mg)
Container No. 1			
Container No. 2			
Total			
Less Acetone blank			
Weight of particulate matter			

Moisture Analysis	Final volume (mg)	Initial volume (mg)	Liquid collected (mg)
Impingers	Note 1	Note 1	
Silica gel			
Total			

Note 1: Convert volume of water to weight by multiplying by the density of water (1 g/ml).

Container No.	Final weight (mg)	Tare of aluminum dish (mg)	Weight gain	Acetone wash volume (ml)	Methylene chloride wash volume (ml)
MCEM Analysis					
1					

Container No.	Final weight (mg)	Tare of aluminum dish (mg)	Weight gain	Acetone wash volume (ml)	Methylene chloride wash volume (ml)
2+2M					
3W					
3S					
Total	.....	.....	$\sum m_{total}$	$\sum V_{aw}$	$\sum V_{tw}$

Less acetone wash blank (mg) (not to exceed 1 mg/l of acetone used).	$w_a = c_a p_a \sum V_{aw}$
Less methylene chloride wash blank (mg) (not to exceed 1.5 mg/l of methylene chloride used).	$w_t = c_t p_t \sum V_{tw}$
Less filter blank (mg) (not to exceed . . . (mg/filter)	F_b
MCEM weight (mg)	$m_{MCEOM} = \sum m_{total} - w_a - w_t - f_b$

METHOD 316—SAMPLING AND ANALYSIS FOR FORMALDEHYDE EMISSIONS FROM STATIONARY SOURCES IN THE MINERAL WOOL AND WOOL FIBERGLASS INDUSTRIES

1.0 *Introduction*

This method is applicable to the determination of formaldehyde, CAS Registry number 50–00–0, from stationary sources in the mineral wool and wool fiber glass industries. High purity water is used to collect the formaldehyde. The formaldehyde concentrations in the stack samples are determined using the modified pararosaniline method. Formaldehyde can be detected as low as 8.8×10^{10} lbs/cu ft (11.3 ppbv) or as high as 1.8×10^{3} lbs/cu ft (23,000,000 ppbv), at standard conditions over a 1 hour sampling period, sampling approximately 30 cu ft.

2.0 *Summary of Method*

Gaseous and particulate pollutants are withdrawn isokinetically from an emission source and are collected in high purity water. Formaldehyde present in the emissions is highly soluble in high purity water. The high purity water containing formaldehyde is then analyzed using the modified pararosaniline method. Formaldehyde in the sample reacts with acidic pararosaniline, and the sodium sulfite, forming a purple chromophore. The intensity of the purple color, measured spectrophotometrically, provides an accurate and precise measure of the formaldehyde concentration in the sample.

3.0 *Definitions*

See the definitions in the General Provisions of this Subpart.

4.0 *Interferences*

Sulfite and cyanide in solution interfere with the pararosaniline method. A procedure to overcome the interference by each compound has been described by Miksch, et al.

5.0 *Safety*. (Reserved)

6.0 *Apparatus and Materials*

6.1 A schematic of the sampling train is shown in Figure 1. This sampling train configuration is adapted from EPA Method 5, 40 CFR part 60, appendix A, procedures.

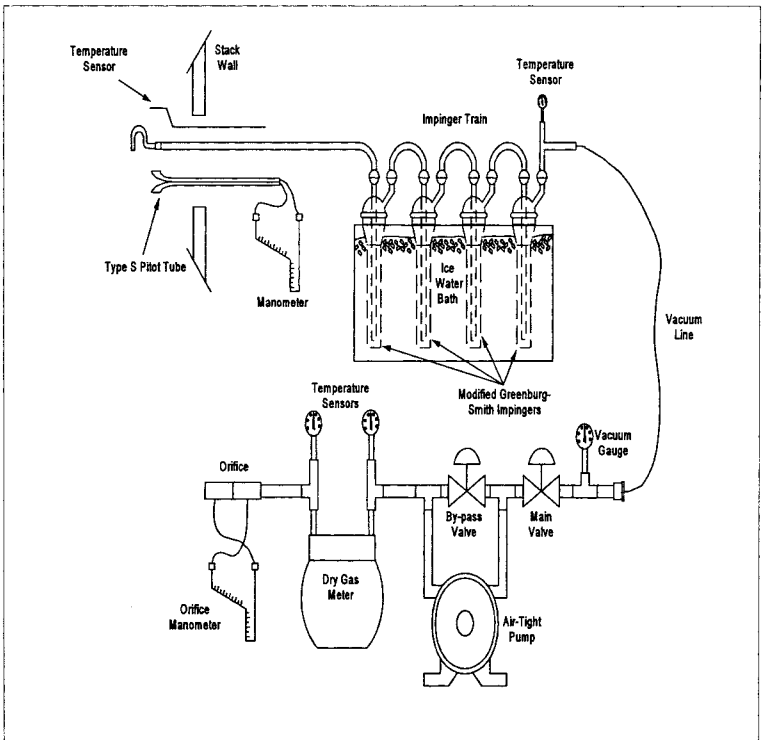

Figure 1. Sampling Train.

The sampling train consists of the following components: probe nozzle, probe liner, pitot tube, differential pressure gauge, impingers, metering system, barometer, and gas density determination equipment.

6.1.1 Probe Nozzle: Quartz, glass, or stainless steel with sharp, tapered (30 ° angle) leading edge. The taper shall be on the outside to preserve a constant inner diameter. The nozzle shall be buttonhook or elbow design. A range of nozzle sizes suitable for isokinetic sampling should be available in increments of 0.15 cm (1/16 in), e.g., 0.32 to 1.27 cm (1/8 to 1/2 in), or larger if higher volume sampling trains are used. Each nozzle shall be calibrated according to the procedure outlined in Section 10.1.

6.1.2 Probe Liner: Borosilicate glass or quartz shall be used for the probe liner. The probe shall be maintained at a temperature of 120 °C ± 14 °C (248 °F ± 25 °F).

6.1.3 Pitot Tube: The pitot tube shall be Type S, as described in Section 2.1 of EPA Method 2, 40 CFR part 60, appendix A, or any other appropriate device. The pitot tube shall be attached to the probe to allow constant monitoring of the stack gas velocity. The impact (high pressure) opening plane of the pitot tube shall be even with or above the nozzle entry plane (see Figure 2–6b, EPA Method 2, 40 CFR part 60, appendix A) during sampling. The Type S pitot tube assembly shall have a known coefficient, determined as outlined in Section 4 of EPA Method 2, 40 CFR part 60, appendix A.

6.1.4 Differential Pressure Gauge: The differential pressure gauge shall be an inclined manometer or equivalent device as described in Section 2.2 of EPA Method 2, 40 CFR part 60, appendix A. One manometer shall be used for velocity-head reading and the other for orifice differential pressure readings.

6.1.5 Impingers: The sampling train requires a minimum of four impingers, connected as shown in Figure 1, with ground glass (or equivalent) vacuum-tight fittings. For the first, third, and fourth impingers, use the Greenburg-Smith design, modified by replacing the tip with a 1.3 cm inside diameters (1/2 in) glass tube extending to 1.3 cm (1/2 in) from the bottom of the flask. For the second impinger, use a Greenburg-Smith impinger with the standard tip. Place a thermometer capable of measuring temperature

to within 1 °C (2 °F) at the outlet of the fourth impinger for monitoring purposes.

6.1.6 Metering System: The necessary components are a vacuum gauge, leak-free pump, thermometers capable of measuring temperatures within 3 °C (5.4 °F), dry-gas meter capable of measuring volume to within 1 percent, and related equipment as shown in Figure 1. At a minimum, the pump should be capable of 4 cfm free flow, and the dry gas meter should have a recording capacity of 0–999.9 cu ft with a resolution of 0.005 cu ft. Other metering systems may be used which are capable of maintaining sample volumes to within 2 percent. The metering system may be used in conjunction with a pitot tube to enable checks of isokinetic sampling rates.

6.1.7 Barometer: The barometer may be mercury, aneroid, or other barometer capable of measuring atmospheric pressure to within 2.5 mm Hg (0.1 in Hg). In many cases, the barometric reading may be obtained from a nearby National Weather Service Station, in which case the station value (which is the absolute barometric pressure) is requested and an adjustment for elevation differences between the weather station and sampling point is applied at a rate of minus 2.5 mm Hg (0.1 in Hg) per 30 m (100 ft) elevation increase (rate is plus 2.5 mm Hg per 30 m (100 ft) of elevation decrease).

6.1.8 Gas Density Determination Equipment: Temperature sensor and pressure gauge (as described in Sections 2.3 and 2.3 of EPA Method 2, 40 CFR part 60, appendix A), and gas analyzer, if necessary (as described in EPA Method 3, 40 CFR part 60, appendix A). The temperature sensor ideally should be permanently attached to the pitot tube or sampling probe in a fixed configuration such that the top of the sensor extends beyond the leading edge of the probe sheath and does not touch any metal. Alternatively, the sensor may be attached just prior to use in the field. Note, however, that if the temperature sensor is attached in the field, the sensor must be placed in an interference-free arrangement with respect to the Type S pitot openings (see Figure 2–7, EPA Method 2, 40 CFR part 60, appendix A). As a second alternative, if a difference of no more than 1 percent in the average velocity measurement is to be introduced, the temperature gauge need not be attached to the probe or pitot tube.

6.2 Sample Recovery

6.2.1 Probe Liner: Probe nozzle and brushes; bristle brushes with stainless steel wire handles are required. The probe brush shall have extensions of stainless steel, Teflon™, or inert material at least as long as the probe. The brushes shall be properly sized and shaped to brush out the probe liner, the probe nozzle, and the impingers.

6.2.2 Wash Bottles: One wash bottle is required. Polyethylene, Teflon™, or glass wash bottles may be used for sample recovery.

6.2.3 Graduated Cylinder and/or Balance: A graduated cylinder or balance is required to measure condensed water to the nearest 1 ml or 1 g. Graduated cylinders shall have division not >2 ml. Laboratory balances capable of weighing to ± 0.5 g are required.

6.2.4 Polyethylene Storage Containers: 500 ml wide-mouth polyethylene bottles are required to store impinger water samples.

6.2.5 Rubber Policeman and Funnel: A rubber policeman and funnel are required to aid the transfer of material into and out of containers in the field.

6.3 Sample Analysis

6.3.1 Spectrophotometer—B&L 70, 710, 2000, etc., or equivalent; 1 cm pathlength cuvette holder.

6.3.2 Disposable polystyrene cuvettes, pathlengh 1 cm, volume of about 4.5 ml.

6.3.3 Pipettors—Fixed-volume Oxford pipet (250 µl; 500 µl; 1000 µl); adjustable volume Oxford or equivalent pipettor 1–5 ml model, set to 2.50 ml.

6.3.4 Pipet tips for pipettors above.

6.3.5 Parafilm, 2 ° wide; cut into about 1'' squares.

7.0 *Reagents*

7.1 High purity water: All references to water in this method refer to high purity water (ASTM Type I water or equivalent). The water purity will dictate the lower limits of formaldehyde quantification.

7.2 Silica Gel: Silica gel shall be indicting type, 6–16 mesh. If the silica gel has been used previously, dry at 175 °C (350 °F) for 2 hours before using. New silica gel may be used as received. Alternatively, other types of desiccants (equivalent or better) may be used.

7.3 Crushed Ice: Quantities ranging from 10–50 lbs may be necessary during a sampling run, depending upon ambient temperature. Samples which have been taken must be stored and shipped cold; sufficient ice for this purpose must be allowed.

7.4 Quaternary ammonium compound stock solution: Prepare a stock solution of dodecyltrimethylammonium chloride (98 percent minimum assay, reagent grade) by dissolving 1.0 gram in 1000 ml water. This solution contains nominally 1000 µg/ml quaternary ammonium compound, and is used as a biocide for some sources which are prone to microbial contamination.

7.5 Pararosaniline: Weigh 0.16 grams pararosaniline (free base; assay of 95 percent or greater, C.I. 42500; Sigma P7632 has been found to be acceptable) into a 100 ml flask. Exercise care, since pararosaniline is a dye and will stain. Using a wash bottle with

high-purity water, rinse the walls of the flask. Add no more than 25 ml water. Then, carefully add 20 ml of concentrated hydrochloric acid to the flask. The flask will become warm after the addition of acid. Add a magnetic stir bar to the flask, cap, and place on a magnetic stirrer for approximately 4 hours. Then, add additional water so the total volume is 100 ml. This solution is stable for several months when stored tightly capped at room temperature.

7.6 Sodium sulfite: Weigh 0.10 grams anhydrous sodium sulfite into a 100 ml flask. Dilute to the mark with high purity water. Invert 15–20 times to mix and dissolve the sodium sulfite. This solution must be prepared fresh every day.

7.7 Formaldehyde standard solution: Pipet exactly 2.70 ml of 37 percent formaldehyde solution into a 1000 ml volumetric flask which contains about 500 ml of high-purity water. Dilute to the mark with high-purity water. This solution contains nominally 1000 µg/ml of formaldehyde, and is used to prepare the working formaldehyde standards. The exact formaldehyde concentration may be determined if needed by suitable modification of the sodium sulfite method (Reference: J.F. Walker, Formaldehyde (Third Edition), 1964.). The 1000 µg/ml formaldehyde stock solution is stable for at least a year if kept tightly closed, with the neck of the flask sealed with Parafilm. Store at room temperature.

7.8 Working formaldehyde standards: Pipet exactly 10.0 ml of the 1000 µg/ml formaldehyde stock solution into a 100 ml volumetric flask which is about half full of high-purity water. Dilute to the mark with high-purity water, and invert 15–20 times to mix thoroughly. This solution contains nominally 100 µg/ml formaldehyde. Prepare the working standards from this 100 µg/ml standard solution and using the Oxford pipets:

Working standard, µ/mL	µL or 100 µg/mL solution	Volumetric flask volume (dilute to mark with water)
0.250	250	100
0.500	500	100
1.00	1000	100
2.00	2000	100
3.00	1500	50

The 100 µg/ml stock solution is stable for 4 weeks if kept refrigerated between analyses. The working standards (0.25–3.00 µg/ml) should be prepared fresh every day, consistent with good laboratory practice for trace analysis. If the laboratory water is not of sufficient purity, it may be necessary to prepare the working standards every day. The laboratory must establish that the working standards are stable—DO NOT assume that your working standards are stable for more than a day unless you have verified this by actual testing for several series of working standards.

8.0 Sample Collection

8.1 Because of the complexity of this method, field personnel should be trained in and experienced with the test procedures in order to obtain reliable results.

8.2 Laboratory Preparation

8.2.1 All the components shall be maintained and calibrated according to the procedure described in APTD–0576, unless otherwise specified.

8.2.2 Weigh several 200 to 300 g portions of silica gel in airtight containers to the nearest 0.5 g. Record on each container the total weight of the silica gel plus containers. As an alternative to preweighing the silica gel, it may instead be weighed directly in the impinger or sampling holder just prior to train assembly.

8.3 Preliminary Field Determinations

8.3.1 Select the sampling site and the minimum number of sampling points according to EPA Method 1, 40 CFR part 60, appendix A, or other relevant criteria. Determine the stack pressure, temperature, and range of velocity heads using EPA Method 2, 40 CFR part 60, appendix A. A leak-check of the pitot lines according to Section 3.1 of EPA Method 2, 40 CFR part 60, appendix A, must be performed. Determine the stack gas moisture content using EPA Approximation Method 4,40 CFR part 60, appendix A, or its alternatives to establish estimates of isokinetic sampling rate settings. Determine the stack gas dry molecular weight, as described in EPA Method 2, 40 CFR part 60, appendix A, Section 3.6. If integrated EPA Method 3, 40 CFR part 60, appendix A, sampling is used for molecular weight determination, the integrated bag sample shall be taken simultaneously with, and for the same total length of time as, the sample run.

8.3.2 Select a nozzle size based on the range of velocity heads so that it is not necessary to change the nozzle size in order to maintain isokinetic sampling rates below 28 l/min (1.0 cfm). During the run do not change the nozzle. Ensure that the proper differential pressure gauge is chosen for the range of velocity heads encountered (see Section 2.2 of EPA Method 2, 40 CFR part 60, appendix A).

8.3.3 Select a suitable probe liner and probe length so that all traverse points can be sampled. For large stacks, to reduce the length of the probe, consider sampling from opposite sides of the stack.

8.3.4 A minimum of 30 cu ft of sample volume is suggested for emission sources with stack concentrations not greater than 23,000,000 ppbv. Additional sample volume

shall be collected as necessitated by the capacity of the water reagent and analytical detection limit constraint. Reduced sample volume may be collected as long as the final concentration of formaldehyde in the stack sample is greater than 10 (ten) times the detection limit.

8.3.5 Determine the total length of sampling time needed to obtain the identified minimum volume by comparing the anticipated average sampling rate with the volume requirement. Allocate the same time to all traverse points defined by EPA Method 1, 40 CFR part 60, appendix A. To avoid timekeeping errors, the length of time sampled at each traverse point should be an integer or an integer plus 0.5 min.

8.3.6 In some circumstances (e.g., batch cycles) it may be necessary to sample for shorter times at the traverse points and to obtain smaller gas-volume samples. In these cases, careful documentation must be maintained in order to allow accurate calculations of concentrations.

8.4 Preparation of Collection Train

8.4.1 During preparation and assembly of the sampling train, keep all openings where contamination can occur covered with Teflon™ film or aluminum foil until just prior to assembly or until sampling is about to begin.

8.4.2 Place 100 ml of water in each of the first two impingers, and leave the third impinger empty. If additional capacity is required for high expected concentrations of formaldehyde in the stack gas, 200 ml of water per impinger may be used or additional impingers may be used for sampling. Transfer approximately 200 to 300 g of preweighed silica gel from its container to the fourth impinger. Care should be taken to ensure that the silica gel is not entrained and carried out from the impinger during sampling. Place the silica gel container in a clean place for later use in the sample recovery. Alternatively, the weight of the silica gel plus impinger may be determined to the nearest 0.5 g and recorded.

8.4.3 With a glass or quartz liner, install the selected nozzle using a Viton-A O-ring when stack temperatures are <260 °C (500 °F) and a woven glass-fiber gasket when temperatures are higher. See APTD–0576 for details. Other connection systems utilizing either 316 stainless steel or Teflon™ ferrules may be used. Mark the probe with heat-resistant tape or by some other method to denote the proper distance into the stack or duct for each sampling point.

8.4.4 Assemble the train as shown in Figure 1. During assembly, a very light coating of silicone grease may be used on ground-glass joints of the impingers, but the silicone grease should be limited to the outer portion (see APTD–0576) of the ground-glass joints to minimize silicone grease contamination. If necessary, Teflon™ tape may be used to seal leaks. Connect all temperature sensors to an appropriate potentiometer/display unit. Check all temperature sensors at ambient temperatures.

8.4.5 Place crushed ice all around the impingers.

8.4.6 Turn on and set the probe heating system at the desired operating temperature. Allow time for the temperature to stabilize.

8.5 Leak-Check Procedures

8.5.1 Pre-test Leak-check: Recommended, but not required. If the tester elects to conduct the pre-test leak-check, the following procedure shall be used.

8.5.1.1 After the sampling train has been assembled, turn on and set probe heating system at the desired operating temperature. Allow time for the temperature to stabilize. If a Viton-a O-ring or other leak-free connection is used in assembling the probe nozzle to the probe liner, leak-check the train at the sampling site by plugging the nozzle and pulling a 381 mm Hg (15 in Hg) vacuum.

NOTE: A lower vacuum may be used, provided that the lower vacuum is not exceeded during the test.

If a woven glass fiber gasket is used, do not connect the probe to the train during the leak-check. Instead, leak-check the train by first attaching a carbon-filled leak-check impinger to the inlet and then plugging the inlet and pulling a 381 mm Hg (15 in Hg) vacuum. (A lower vacuum may be used if this lower vacuum is not exceeded during the test.) Next connect the probe to the train and leak-check at about 25 mm Hg (1 in Hg) vacuum. Alternatively, leak-check the probe with the rest of the sampling train in one step at 381 mm Hg (15 in Hg) vacuum. Leakage rates in excess of (a) 4 percent of the average sampling rate or (b) 0.00057 m^3/min (0.02 cfm), whichever is less, are unacceptable.

8.5.1.2 The following leak-check instructions for the sampling train described in APTD–0576 and APTD–0581 may be helpful. Start the pump with the fine-adjust valve fully open and coarse-valve completely closed. Partially open the coarse-adjust valve and slowly close the fine-adjust valve until the desired vacuum is reached. Do not reverse direction of the fine-adjust valve, as liquid will back up into the train. If the desired vacuum is exceeded, either perform the leak-check at this higher vacuum or end the leak-check, as described below, and start over.

8.5.1.3 When the leak-check is completed, first slowly remove the plug from the inlet to the probe. When the vacuum drops to 127 mm (5 in) Hg or less, immediately close the coarse-adjust valve. Switch off the pumping system and reopen the fine-adjust valve. Do not reopen the fine-adjust valve until the

coarse-adjust valve has been closed to prevent the liquid in the impingers from being forced backward in the sampling line and silica gel from being entrained backward into the third impinger.

8.5.2 Leak-checks During Sampling Run:

8.5.2.1 If, during the sampling run, a component change (e.g., impinger) becomes necessary, a leak-check shall be conducted immediately after the interruption of sampling and before the change is made. The leak-check shall be done according to the procedure described in Section 10.3.3, except that it shall be done at a vacuum greater than or equal to the maximum value recorded up to that point in the test. If the leakage rate is found to be no greater than 0.0057 m^3/min (0.02 cfm) or 4 percent of the average sampling rate (whichever is less), the results are acceptable. If a higher leakage rate is obtained, the tester must void the sampling run.

NOTE: Any correction of the sample volume by calculation reduces the integrity of the pollutant concentration data generated and must be avoided.

8.5.2.2 Immediately after component changes, leak-checks are optional. If performed, the procedure described in section 8.5.1.1 shall be used.

8.5.3 Post-test Leak-check:

8.5.3.1 A leak-check is mandatory at the conclusion of each sampling run. The leak-check shall be done with the same procedures as the pre-test leak-check, except that the post-test leak-check shall be conducted at a vacuum greater than or equal to the maximum value reached during the sampling run. If the leakage rate is found to be no greater than 0.00057 m^3/min (0.02 cfm) or 4 percent of the average sampling rate (whichever is less), the results are acceptable. If, however, a higher leakage rate is obtained, the tester shall record the leakage rate and void the sampling run.

8.6 Sampling Train Operation

8.6.1 During the sampling run, maintain an isokinetic sampling rate to within 10 percent of true isokinetic, below 28 l/min (1.0 cfm). Maintain a temperature around the probe of 120 °C ± 14 °C (248 ° ± 25 °F).

8.6.2 For each run, record the data on a data sheet such as the one shown in Figure 2. Be sure to record the initial dry-gas meter reading. Record the dry-gas meter readings at the beginning and end of each sampling time increment, when changes in flow rates are made, before and after each leak-check, and when sampling is halted. Take other readings required by Figure 2 at least once at each sample point during each time increment and additional readings when significant adjustments (20 percent variation in velocity head readings) necessitate additional adjustments in flow rate. Level and zero the manometer. Because the manometer level and zero may drift due to vibrations and temperature changes, make periodic checks during the traverse.

Figure 2 - Formaldehyde Field Data

Plant . . . . . .

Location . . . . . .

Operator . . . . . .

Date . . . . . .

Run No . . . . . .

Sample box No . . . . . .

Meter box No . . . . . .

Meter ΔH . . . . . .

C Factor . . . . . .

Pitot tube coefficient, Op

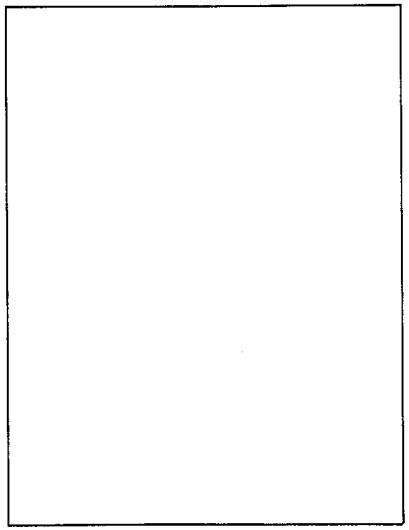

SCHEMATIC OF STACK CROSS SECTION

Ambient temperature . . . . . .

Barometric pressure . . . . . .

Assumed moisture, percent . . . .

Probe length, m (ft) . . . . . .

Nozzle Identification No . . . .

Average calibrated nozzle

diameter, cm (in.) . . . . . .

Probe heater setting . . . . . .

Leak rate, m^3/min (cfm) . . . . .

Probe liner material . . . . . .

Static pressure, mm Hg (in. Hg) .

Filter No. . . . . .

Traverse point number	Sampling time (e) min.	Vacuum mm Hg (in. Hg)	Stack temperature (T) deg;C (°F)	Velocity head (ΔP) mm (in) H_2O	Pressure differential across orifice meter mm H_2O (in. H_2O)	Gas sample volume m^3 (ft^3)	Gas sample temperature at dry gas meter		Filter holder temperature deg;C (°F)	Temperature of gas leaving condenser or last impinger deg;C (°F)
							Inlet deg;C (°F)	Outlet deg;C (°F)		
	.....	.....	.....	.....	.....	.....	.....	.....	.....	.....
	.....	.....	.....	.....	.....	.....	.....	.....	.....	.....
	.....	.....	.....	.....	.....	.....	.....	.....	.....	.....
	.....	.....	.....	.....	.....	.....	.....	.....	.....	.....
	.....	.....	.....	.....	.....	.....	.....	.....	.....	.....
Total	.....	.....	.....	.....	.....	.....	Avg.	Avg.	.....	.....
Average	.....	.....	.....	.....	.....	.....	Avg.	.....	.....	.....

8.6.3 Clean the stack access ports prior to the test run to eliminate the chance of sampling deposited material. To begin sampling, remove the nozzle cap, verify that the probe heating system are at the specified temperature, and verify that the pitot tube and probe are properly positioned. Position the nozzle at the first traverse point, with the tip pointing directly into the gas stream. Immediately start the pump and adjust the flow to isokinetic conditions. Nomographs, which aid in the rapid adjustment of the isokinetic sampling rate without excessive computations, are available. These nomographs are designed for use when the Type S pitot tube coefficient is 0.84 ± 0.02 and the stack gas equivalent density (dry molecular weight) is equal to 29 ± 4. APTD–0576 details the procedure for using the nomographs. If the stack gas molecular weight and the pitot tube coefficient are outside the above ranges, do not use the nomographs unless appropriate steps are taken to compensate for the deviations.

8.6.4 When the stack is under significant negative pressure (equivalent to the height of the impinger stem), take care to close the coarse-adjust valve before inserting the probe into the stack in order to prevent liquid from backing up through the train. If necessary, a low vacuum on the train may have to be started prior to entering the stack.

8.6.5 When the probe is in position, block off the openings around the probe and stack access port to prevent unrepresentative dilution of the gas stream.

8.6.6 Traverse the stack cross section, as required by EPA Method 1, 40 CFR part 60, appendix A, being careful not to bump the probe nozzle into the stack walls when sampling near the walls or when removing or inserting the probe through the access port, in order to minimize the chance of extracting deposited material.

8.6.7 During the test run, make periodic adjustments to keep the temperature around the probe at the proper levels. Add more ice and, if necessary, salt, to maintain a temperature of <20 °C (68 °F) at the silica gel outlet.

8.6.8 A single train shall be used for the entire sampling run, except in cases where simultaneous sampling is required in two or more separate ducts or at two or more different locations within the same duct, or in cases where equipment failure necessitates a change of trains. An additional train or trains may also be used for sampling when the capacity of a single train is exceeded.

8.6.9 When two or more trains are used, separate analyses of components from each train shall be performed. If multiple trains have been used because the capacity of a single train would be exceeded, first impingers from each train may be combined, and second impingers from each train may be combined.

8.6.10 At the end of the sampling run, turn off the coarse-adjust valve, remove the probe and nozzle from the stack, turn off the pump, record the final dry gas meter reading, and conduct a post-test leak-check. Also, check the pitot lines as described in EPA Method 2, 40 CFR part 60, appendix A. The lines must pass this leak-check in order to validate the velocity-head data.

8.6.11 Calculate percent isokineticity (see Method 2) to determine whether the run was valid or another test should be made.

8.7 Sample Preservation and Handling

8.7.1 Samples from most sources applicable to this method have acceptable holding times using normal handling practices (shipping samples iced, storing in refrigerator at 2 °C until analysis). However, forming section stacks and other sources using waste water sprays may be subject to microbial contamination. For these sources, a biocide (quaternary ammonium compound solution) may be added to collected samples to improve sample stability and method ruggedness.

8.7.2 Sample holding time: Samples should be analyzed within 14 days of collection. Samples must be refrigerated/kept cold for the entire period preceding analysis. After the samples have been brought to room temperature for analysis, any analyses needed should be performed on the same day. Repeated cycles of warming the samples to room temperature/refrigerating/rewarming, then analyzing again, etc., have not been investigated in depth to evaluate if analyte levels remain stable for all sources.

8.7.3 Additional studies will be performed to evaluate whether longer sample holding times are feasible for this method.

8.8 Sample Recovery

8.8.1 Preparation:

8.8.1.1 Proper cleanup procedure begins as soon as the probe is removed from the stack at the end of the sampling period. Allow the probe to cool. When the probe can be handled safely, wipe off all external particulate matter near the tip of the probe nozzle and place a cap over the tip to prevent losing or gaining particulate matter. Do not cap the probe tightly while the sampling train is cooling because a vacuum will be created, drawing liquid from the impingers back through the sampling train.

8.8.1.2 Before moving the sampling train to the cleanup site, remove the probe from the sampling train and cap the open outlet, being careful not to lose any condensate that might be present. Remove the umbilical cord from the last impinger and cap the impinger. If a flexible line is used, let any condensed water or liquid drain into the impingers. Cap off any open impinger inlets and outlets. Ground glass stoppers, Teflon™ caps, or

caps of other inert materials may be used to seal all openings.

8.8.1.3 Transfer the probe and impinger assembly to an area that is clean and protected from wind so that the chances of contaminating or losing the sample are minimized.

8.8.1.4 Inspect the train before and during disassembly, and note any abnormal conditions.

8.8.1.5 Save a portion of the washing solution (high purity water) used for cleanup as a blank.

8.8.2 Sample Containers:

8.8.2.1 Container 1: Probe and Impinger Catches. Using a graduated cylinder, measure to the nearest ml, and record the volume of the solution in the first three impingers. Alternatively, the solution may be weighed to the nearest 0.5 g. Include any condensate in the probe in this determination. Transfer the combined impinger solution from the graduated cylinder into the polyethylene bottle. Taking care that dust on the outside of the probe or other exterior surfaces does not get into the sample, clean all surfaces to which the sample is exposed (including the probe nozzle, probe fitting, probe liner, first three impingers, and impinger connectors) with water. Use less than 400 ml for the entire waste (250 ml would be better, if possible). Add the rinse water to the sample container.

8.8.2.1.1 Carefully remove the probe nozzle and rinse the inside surface with water from a wash bottle. Brush with a bristle brush and rinse until the rinse shows no visible particles, after which make a final rinse of the inside surface. Brush and rinse the inside parts of the Swagelok (or equivalent) fitting with water in a similar way.

8.8.2.1.2 Rinse the probe liner with water. While squirting the water into the upper end of the probe, tilt and rotate the probe so that all inside surfaces will be wetted with water. Let the water drain from the lower end into the sample container. The tester may use a funnel (glass or polyethylene) to aid in transferring the liquid washes to the container. Follow the rinse with a bristle brush. Hold the probe in an inclined position, and squirt water into the upper end as the probe brush is being pushed with a twisting action through the probe. Hold the sample container underneath the lower end of the probe, and catch any water and particulate matter that is brushed from the probe. Run the brush through the probe three times or more. Rinse the brush with water and quantitatively collect these washings in the sample container. After the brushing, make a final rinse of the probe as describe above.

NOTE: Two people should clean the probe in order to minimize sample losses. Between sampling runs, brushes must be kept clean and free from contamination.

8.8.2.1.3 Rinse the inside surface of each of the first three impingers (and connecting tubing) three separate times. Use a small portion of water for each rinse, and brush each surface to which the sample is exposed with a bristle brush to ensure recovery of fine particulate matter. Make a final rinse of each surface and of the brush, using water.

8.8.2.1.4 After all water washing and particulate matter have been collected in the sample container, tighten the lid so the sample will not leak out when the container is shipped to the laboratory. Mark the height of the fluid level to determine whether leakage occurs during transport. Label the container clearly to identify its contents.

8.8.2.1.5 If the first two impingers are to be analyzed separately to check for breakthrough, separate the contents and rinses of the two impingers into individual containers. Care must be taken to avoid physical carryover from the first impinger to the second. Any physical carryover of collected moisture into the second impinger will invalidate a breakthrough assessment.

8.8.2.2 Container 2: Sample Blank. Prepare a blank by using a polyethylene container and adding a volume of water equal to the total volume in Container 1. Process the blank in the same manner as Container 1.

8.8.2.3 Container 3: Silica Gel. Note the color of the indicating silica gel to determine whether it has been completely spent and make a notation of its condition. The impinger containing the silica gel may be used as a sample transport container with both ends sealed with tightly fitting caps or plugs. Ground-glass stoppers or Teflon™ caps maybe used. The silica gel impinger should then be labeled, covered with aluminum foil, and packaged on ice for transport to the laboratory. If the silica gel is removed from the impinger, the tester may use a funnel to pour the silica gel and a rubber policeman to remove the silica gel from the impinger. It is not necessary to remove the small amount of dust particles that may adhere to the impinger wall and are difficult to remove. Since the gain in weight is to be used for moisture calculations, do not use water or other liquids to transfer the silica gel. If a balance is available in the field, the spent silica gel (or silica gel plus impinger) may be weighed to the nearest 0.5 g.

8.8.2.4 Sample containers should be placed in a cooler, cooled by (although not in contact with) ice. Putting sample bottles in Zip-Lock™ bags can aid in maintaining the integrity of the sample labels. Sample containers should be placed vertically to avoid leakage during shipment. Samples should be cooled during shipment so they will be received cold at the laboratory. It is critical that samples be chilled immediately after recovery. If the source is susceptible to microbial contamination from wash water (e.g.

forming section stack), add biocide as directed in section 8.2.5.

8.8.2.5 A quaternary ammonium compound can be used as a biocide to stabilize samples against microbial degradation following collection. Using the stock quaternary ammonium compound (QAC) solution; add 2.5 ml QAC solution for every 100 ml of recovered sample volume (estimate of volume is satisfactory) immediately after collection. The total volume of QAC solution must be accurately known and recorded, to correct for any dilution caused by the QAC solution addition.

8.8.3 Sample Preparation for Analysis 8.8.3.1 The sample should be refrigerated if the analysis will not be performed on the day of sampling. Allow the sample to warm at room temperature for about two hours (if it has been refrigerated) prior to analyzing.

8.8.3.2 Analyze the sample by the pararosaniline method, as described in Section 11. If the color-developed sample has an absorbance above the highest standard, a suitable dilution in high purity water should be prepared and analyzed.

9.0 Quality Control

9.1 Sampling: See EPA Manual 600/4–77–02b for Method 5 quality control.

9.2 Analysis: The quality assurance program required for this method includes the analysis of the field and method blanks, and procedure validations. The positive identification and quantitation of formaldehyde are dependent on the integrity of the samples received and the precision and accuracy of the analytical methodology. Quality assurance procedures for this method are designed to monitor the performance of the analytical methodology and to provide the required information to take corrective action if problems are observed in laboratory operations or in field sampling activities.

9.2.1 Field Blanks: Field blanks must be submitted with the samples collected at each sampling site. The field blanks include the sample bottles containing aliquots of sample recover water, and water reagent. At a minimum, one complete sampling train will be assembled in the field staging area, taken to the sampling area, and leak-checked at the beginning and end of the testing (or for the same total number of times as the actual sampling train). The probe of the blank train must be heated during the sample test. The train will be recovered as if it were an actual test sample. No gaseous sample will be passed through the blank sampling train.

9.2.2 Blank Correction: The field blank formaldehyde concentrations will be subtracted from the appropriate sample formaldehyde concentrations. Blank formaldehyde concentrations above 0.25 μg/ml should be considered suspect, and subtraction from the sample formaldehyde concentrations should be performed in a manner acceptable to the Administrator.

9.2.3 Method Blanks: A method blank must be prepared for each set of analytical operations, to evaluate contamination and artifacts that can be derived from glassware, reagents, and sample handling in the laboratory.

10 Calibration

10.1 Probe Nozzle: Probe nozzles shall be calibrated before their initial use in the field. Using a micrometer, measure the inside diameter of the nozzle to the nearest 0.025 mm (0.001 in). Make measurements at three separate places across the diameter and obtain the average of the measurements. The difference between the high and low numbers shall not exceed 0.1 mm (0.004 in). When the nozzle becomes nicked or corroded, it shall be repaired and calibrated, or replaced with a calibrated nozzle before use. Each nozzle must be permanently and uniquely identified.

10.2 Pitot Tube: The Type S pitot tube assembly shall be calibrated according to the procedure outlined in Section 4 of EPA Method 2, or assigned a nominal coefficient of 0.84 if it is not visibly nicked or corroded and if it meets design and intercomponent spacing specifications.

10.3 Metering System

10.3.1 Before its initial use in the field, the metering system shall be calibrated according to the procedure outlined in APTD–0576. Instead of physically adjusting the dry-gas meter dial readings to correspond to the wet-test meter readings, calibration factors may be used to correct the gas meter dial readings mathematically to the proper values. Before calibrating the metering system, it is suggested that a leak-check be conducted. For metering systems having diaphragm pumps, the normal leak-check procedure will not delete leakages with the pump. For these cases, the following leak-check procedure will apply: Make a ten-minute calibration run at 0.00057 m^3/min (0.02 cfm). At the end of the run, take the difference of the measured wet-test and dry-gas meter volumes and divide the difference by 10 to get the leak rate. The leak rate should not exceed 0.00057 m^3/min (0.02 cfm).

10.3.2 After each field use, check the calibration of the metering system by performing three calibration runs at a single intermediate orifice setting (based on the previous field test). Set the vacuum at the maximum value reached during the test series. To adjust the vacuum, insert a valve between the wet-test meter and the inlet of the metering system. Calculate the average

value of the calibration factor. If the calibration has changed by more than 5 percent, recalibrate the meter over the full range of orifice settings, as outlined in APTD–0576.

10.3.3 Leak-check of metering system: The portion of the sampling train from the pump to the orifice meter (see Figure 1) should be leak-checked prior to initial use and after each shipment. Leakage after the pump will result in less volume being recorded than is actually sampled. Use the following procedure: Close the main valve on the meter box. Insert a one-hole rubber stopper with rubber tubing attached into the orifice exhaust pipe. Disconnect and vent the low side of the orifice manometer. Close off the low side orifice tap. Pressurize the system to 13–18 cm (5–7 in) water column by blowing into the rubber tubing. Pinch off the tubing and observe the manometer for 1 min. A loss of pressure on the manometer indicates a leak in the meter box. Leaks must be corrected.

NOTE: If the dry-gas meter coefficient values obtained before and after a test series differ by >5 percent, either the test series must be voided or calculations for test series must be performed using whichever meter coefficient value (i.e., before or after) gives the lower value of total sample volume.

10.4 Probe Heater: The probe heating system must be calibrated before its initial use in the field according to the procedure outlined in APTD–0576. Probes constructed according to APTD–0581 need not be calibrated if the calibration curves in APTD–0576 are used.

10.5 Temperature gauges: Use the procedure in section 4.3 of USEPA Method 2 to calibrate in-stack temperature gauges. Dial thermometers such as are used for the dry gas meter and condenser outlet, shall be calibrated against mercury-in-glass thermometers.

10.6 Barometer: Adjust the barometer initially and before each test series to agree to within ±2.5 mm Hg (0.1 in Hg) of the mercury barometer. Alternately, if a National Weather Service Station (NWSS) is located at the same altitude above sea level as the test site, the barometric pressure reported by the NWSS may be used.

10.7 Balance: Calibrate the balance before each test series, using Class S standard weights. The weights must be within ±0.5 percent of the standards, or the balance must be adjusted to meet these limits.

11.0 Procedure for Analysis.

The working formaldehyde standards (0.25, 0.50, 1.0, 2.0, and 3.0 μg/ml) are analyzed and a calibration curve is calculated for each day's analysis. The standards should be analyzed first to ensure that the method is working properly prior to analyzing the samples. In addition, a sample of the high-purity water should also be analyzed and used as a ''0'' formaldehyde standard.

The procedure for analysis of samples and standards is identical: Using the pipet set to 2.50 ml, pipet 2.50 ml of the solution to be analyzed into a polystyrene cuvette. Using the 250 μl pipet, pipet 250 μl of the pararosaniline reagent solution into the cuvette. Seal the top of the cuvette with a Parafilm square and shake at least 30 seconds to ensure the solution in the cuvette is well-mixed. Peel back a corner of the Parafilm so the next reagent can be added. Using the 250 μl pipet, pipet 250 μl of the sodium sulfite reagent solution into the cuvette. Reseal the cuvette with the Parafilm, and again shake for about 30 seconds to mix the solution in the cuvette. Record the time of addition of the sodium sulfite and let the color develop at room temperature for 60 minutes. Set the spectrophotometer to 570 nm and set to read in Absorbance Units. The spectrophotometer should be equipped with a holder for the 1-cm pathlength cuvettes. Place cuvette(s) containing high-purity water in the spectrophotometer and adjust to read 0.000 AU.

After the 60 minutes color development period, read the standard and samples in the spectrophotometer. Record the absorbance reading for each cuvette. The calibration curve is calculated by linear regression, with the formaldehyde concentration as the ''x'' coordinate of the pair, and the absorbance reading as the ''y'' coordinate. The procedure is very reproducible, and typically will yield values similar to these for the calibration curve:

Correlation Coefficient: 0.9999
Slope: 0.50
Y-Intercept: 0.090

The formaldehyde concentration of the samples can be found by using the trend-line feature of the calculator or computer program used for the linear regression. For example, the TI–55 calculators use the ''X'' key (this gives the predicted formaldehyde concentration for the value of the absorbance you key in for the sample). Multiply the formaldehyde concentration from the sample by the dilution factor, if any, for the sample to give the formaldehyde concentration of the original, undiluted, sample (units will be micrograms/ml).

11.1 Notes on the Pararosaniline Procedure

11.1.1 The pararosaniline method is temperature-sensitive. However, the small fluctuations typical of a laboratory will not significantly affect the results.

11.1.2 The calibration curve is linear to beyond 4 ''μg/ml'' formaldehyde, however, a

research-grade spectrophotometer is required to reproducibly read the high absorbance values. Consult your instrument manual to evaluate the capability of the spectrophotometer.

11.1.3 The quality of the laboratory water used to prepare standards and make dilutions is critical. It is important that the cautions given in the Reagents section be observed. This procedure allows quantitation of formaldehyde at very low levels, and thus it is imperative to avoid contamination from other sources of formaldehyde and to exercise the degree of care required for trace analyses.

11.1.4 The analyst should become familiar with the operation of the Oxford or equivalent pipettors before using them for an analysis. Follow the instructions of the manufacturer; one can pipet water into a tared container on any analytical balance to check pipet accuracy and precision. This will also establish if the proper technique is being used. Always use a new tip for each pipetting operation.

11.1.5 This procedure follows the recommendations of ASTM Standard Guide D 3614, reading all solutions versus water in the reference cell. This allows the absorbance of the blank to be tracked on a daily basis. Refer to ASTM D 3614 for more information.

12.0 Calculations

Carry out calculations, retaining at least one extra decimal figure beyond that of the acquired data. Round off figures after final calculations.

12.1 Calculations of Total Formaldehyde

12.1.1 To determine the total formaldehyde in mg, use the following equation if biocide was not used:

Total mg formaldehyde=

$$C_d \times V \times DF \times 0.001 \text{ mg/}\mu\text{g}$$

Where:

C_d = measured conc. formaldehyde, μg/ml
V = total volume of stack sample, ml
DF = dilution factor

12.1.2 To determine the total formaldehyde in mg, use the following equation if biocide was used:

Total mg formaldehyde=

$$\frac{C_d \times V}{(V - B) \times DF \times 0.001 \text{ mg/}\mu\text{g}}$$

Where:

C_d = measured conc. formaldehyde, μg/ml
V = total volume of stack sample, ml
B = total volume of biocide added to sample, ml
DF = dilution factor

12.2 Formaldehyde concentration (mg/m^3) in stack gas. Determine the formaldehyde concentration (mg/m^3) in the stack gas using the following equation: Formaldehyde concentration (mg/m^3) =

$$\frac{K \times [\text{total formaldehyde, mg}]}{V_m(\text{std})}$$

Where:

K = 35.31 cu ft/m^3 for V_m(std) in English units, or
K = 1.00 m^3/m^3 for V_m(std) in metric units
V_m(std) = volume of gas sample measured by a dry gas meter, corrected to standard conditions, dscm (dscf)

12.3 Average dry gas meter temperature and average orifice pressure drop are obtained from the data sheet.

12.4 Dry Gas Volume: Calculate V_m(std) and adjust for leakage, if necessary, using the equation in Section 6.3 of EPA Method 5, 40 CFR part 60, appendix A.

12.5 Volume of Water Vapor and Moisture Content: Calculated the volume of water vapor and moisture content from equations 5–2 and 5–3 of EPA Method 5.

13.0 Method Performance

The precision of this method is estimated to be better than ±5 percent, expressed as ± the percent relative standard deviation.

14.0 *Pollution Prevention.* (Reserved)

15.0 *Waste Management.* (Reserved)

16.0 *References*

R.R. Miksch, et al., Analytical Chemistry, November 1981, 53 pp. 2118–2123.
J.F. Walker, Formaldehyde, Third Edition, 1964.
US EPA 40 CFR, part 60, Appendix A, Test Methods 1–5

METHOD 318—EXTRACTIVE FTIR METHOD FOR THE MEASUREMENT OF EMISSIONS FROM THE MINERAL WOOL AND WOOL FIBERGLASS INDUSTRIES

1.0 Scope and Application

This method has been validated and approved for mineral wool and wool fiberglass sources. This method may not be applied to other source categories without validation and approval by the Administrator according to the procedures in Test Method 301, 40 CFR part 63, appendix A. For sources seeking to apply FTIR to other source categories, Test Method 320 (40 CFR part 63, appendix A) may be utilized.

1.1 Scope. The analytes measured by this method and their CAS numbers are:

Carbon Monoxide 630–08–0
Carbonyl Sulfide 463–58–1
Formaldehyde 50–00–0
Methanol 1455–13–6
Phenol 108–95–2

1.2 Applicability

1.2.1 This method is applicable for the determination of formaldehyde, phenol, methanol, carbonyl sulfide (COS) and carbon monoxide (CO) concentrations in controlled and uncontrolled emissions from manufacturing processes using phenolic resins. The compounds are analyzed in the mid-infrared spectral region (about 400 to 4000 cm−1 or 25 to 2.5 μm). Suggested analytical regions are given below (Table 1). Slight deviations from these recommended regions may be necessary due to variations in moisture content and ammonia concentration from source to source.

TABLE 1.—EXAMPLE ANALYTICAL REGIONS

Compound	Analytical region (cm−1) $FL_m - FU_m$	Potential interferants
Formaldehyde	2840.93−2679.83	Water, Methane.
Phenol	1231.32−1131.47	Water, Ammonia, Methane.
Methanol	1041.56−1019.95	Water, Ammonia.
COS[a]	2028.4−2091.9	Water, CO_2, CO.
CO[a]	2092.1−2191.8	Water, CO_2, COS.

[a] Suggested analytical regions assume about 15 percent moisture and CO_2, and that COS and CO have about the same absorbance (in the range of 10 to 50 ppm). If CO and COS are hundreds of ppm or higher, then CO_2 and moisture interference is reduced. If CO or COS is present at high concentration and the other at low concentration, then a shorter cell pathlength may be necessary to measure the high concentration component.

1.2.2 This method does not apply when: (a) Polymerization of formaldehyde occurs, (b) moisture condenses in either the sampling system or the instrumentation, and (c) when moisture content of the gas stream is so high relative to the analyte concentrations that it causes severe spectral interference.

1.3 Method Range and Sensitivity

1.3.1 The analytical range is a function of instrumental design and composition of the gas stream. Theoretical detection limits depend, in part, on (a) the absorption coefficient of the compound in the analytical frequency region, (b) the spectral resolution, (c) interferometer sampling time, (d) detector sensitivity and response, and (e) absorption pathlength.

1.3.2 Practically, there is no upper limit to the range. The practical lower detection limit is usually higher than the theoretical value, and depends on (a) moisture content of the flue gas, (b) presence of interferants, and (c) losses in the sampling system. In general, a 22 meter pathlength cell in a suitable sampling system can achieve practical detection limits of 1.5 ppm for three compounds (formaldehyde, phenol, and methanol) at moisture levels up to 15 percent by volume. Sources with uncontrolled emissions of CO and COS may require a 4 meter pathlength cell due to high concentration levels. For these two compounds, make sure absorbance of highest concentration component is <1.0.

1.4 Data Quality Objectives

1.4.1 In designing or configuring the system, the analyst first sets the data quality objectives, i.e., the desired lower detection limit (DL_i) and the desired analytical uncertainty (AU_i) for each compound. The instrumental parameters (factors b, c, d, and e in Section 1.3.1) are then chosen to meet these requirements, using Appendix D of the FTIR Protocol.

1.4.2 Data quality for each application is determined, in part, by measuring the RMS (Root Mean Square) noise level in each analytical spectral region (Appendix C of the FTIR Protocol). The RMS noise is defined as the RMSD (Root Mean Square Deviation) of the absorbance values in an analytical region from the mean absorbance value of the region. Appendix D of the FTIR Protocol defines the MAU_{im} (minimum analyte uncertainty of the ith analyte in the mth analytical region). The MAU is the minimum analyte concentration for which the analytical uncertainty limit (AU_i) can be maintained: if the measured analyte concentration is less than MAU_i, then data quality is unacceptable. Table 2 gives some example DL and AU values along with calculated areas and MAU values using the protocol procedures.

TABLE 2.—EXAMPLE PRE-TEST PROTOCOL CALCULATIONS

Protocol value	Form	Phenol	Methanol	Protocol appendix
Reference concentration[a] (ppm-meters)/K	3.016	3.017	5.064	
Reference Band Area	8.2544	16.6417	4.9416	B
DL (ppm-meters)/K	0.1117	0.1117	0.1117	B
AU	0.2	0.2	0.2	B
CL	0.02234	0.02234	0.02234	B
FL	2679.83	1131.47	1019.95	B

TABLE 2.—EXAMPLE PRE-TEST PROTOCOL CALCULATIONS—Continued

Protocol value	Form	Phenol	Methanol	Protocol appendix
FU	2840.93	1231.32	1041.56	B
FC	2760.38	1181.395	1030.755	B
AAI (ppm-meters)/K	0.18440	0.01201	0.00132	B
RMSD	2.28E–03	1.21E–03	1.07E–03	C
MAU (ppm-meters)/K	4.45E–02	7.26E–03	4.68E–03	D
MAU (ppm at 22)	0.0797	0.0130	0.0084	D

[a] Concentration units are: ppm concentration of the reference sample (ASC), times the path length of the FTIR cell used when the reference spectrum was measured (meters), divided by the absolute temperature of the reference sample in Kelvin (K), or (ppm-meters)/K.

2.0 Summary of Method

2.1 Principle

2.1.1 Molecules are composed of chemically bonded atoms, which are in constant motion. The atomic motions result in bond deformations (bond stretching and bond-angle bending). The number of fundamental (or independent) vibrational motions depends on the number of atoms (N) in the molecule. At typical testing temperatures, most molecules are in the ground-state vibrational state for most of their fundamental vibrational motions. A molecule can undergo a transition from its ground state (for a particular vibration) to the first excited state by absorbing a quantum of light at a frequency characteristic of the molecule and the molecular motion. Molecules also undergo rotational transitions by absorbing energies in the far-infrared or microwave spectral regions. Rotational transition absorbencies are superimposed on the vibrational absorbencies to give a characteristic shape to each rotational-vibrational absorbance ''band.''

2.1.2 Most molecules exhibit more than one absorbance band in several frequency regions to produce an infrared spectrum (a characteristic pattern of bands or a ''fingerprint'') that is unique to each molecule. The infrared spectrum of a molecule depends on its structure (bond lengths, bond angles, bond strengths, and atomic masses). Even small differences in structure can produce significantly different spectra.

2.1.3 Spectral band intensities vary with the concentration of the absorbing compound. Within constraints, the relationship between absorbance and sample concentration is linear. Sample spectra are compared to reference spectra to determine the species and their concentrations.

2.2 Sampling and Analysis

2.2.1 Flue gas is continuously extracted from the source, and the gas or a portion of the gas is conveyed to the FTIR gas cell, where a spectrum of the flue gas is recorded. Absorbance band intensities are related to sample concentrations by Beer's Law.

Where:

$$A_v = \sum a_i b c_i \qquad (6)$$

A_v = absorbance of the ith component at the given frequency, ν.
a = absorption coefficient of the ith component at the frequency, ν.
b = path length of the cell.
c = concentration of the ith compound in the sample at frequency ν.

2.2.2 After identifying a compound from the infrared spectrum, its concentration is determined by comparing band intensities in the sample spectrum to band intensities in ''reference spectra'' of the formaldehyde, phenol, methanol, COS and CO. These reference spectra are available in a permanent soft copy from the EPA spectral library on the EMTIC bulletin board. The source may also prepare reference spectra according to Section 4.5 of the FTIR Protocol.

NOTE: Reference spectra not prepared according to the FTIR Protocol are not acceptable for use in this test method. Documentation detailing the FTIR Protocol steps used in preparing any non-EPA reference spectra shall be included in each test report submitted by the source.

2.3 Operator Requirements. The analyst must have some knowledge of source sampling and of infrared spectral patterns to operate the sampling system and to choose a suitable instrument configuration. The analyst should also understand FTIR instrument operation well enough to choose an instrument configuration consistent with the data quality objectives.

3.0 Definitions

See Appendix A of the *FTIR* Protocol.

4.0 Interferences

4.1 Analytical (or Spectral) Interferences. Water vapor. High concentrations of ammonia (hundreds of ppm) may interfere with the analysis of low concentrations of methanol (1 to 5 ppm). For CO, carbon dioxide and water may be interferants. In cases where COS levels are low relative to CO levels, CO and water may be interferants.

4.2 Sampling System Interferences. Water, if it condenses, and ammonia, which reacts with formaldehyde.

5.0 Safety

5.1 Formaldehyde is a suspected carcinogen; therefore, exposure to this compound must be limited. Proper monitoring and safety precautions must be practiced in any atmosphere with potentially high concentrations of CO.

5.2 This method may involve sampling at locations having high positive or negative pressures, high temperatures, elevated heights, high concentrations of hazardous or toxic pollutants, or other diverse sampling conditions. It is the responsibility of the tester(s) to ensure proper safety and health practices, and to determine the applicability of regulatory limitations before performing this test method.

6.0 Equipment and Supplies

The equipment and supplies are based on the schematic of a sampling train shown in Figure 1. Either the evacuated or purged sampling technique may be used with this sampling train. Alternatives may be used, provided that the data quality objectives of this method are met.

6.1 Sampling Probe. Glass, stainless steel, or other appropriate material of sufficient length and physical integrity to sustain heating, prevent adsorption of analytes, and to reach gas sampling point.

6.2 Particulate Filters. A glass wool plug (optional) inserted at the probe tip (for large particulate removal) and a filter rated at 1-micron (e.g., Balston™) for fine particulate removal, placed immediately after the heated probe.

6.3 Sampling Line/Heating System. Heated (maintained at 250 ± 25 degrees F) stainless steel, Teflon™, or other inert material that does not adsorb the analytes, to transport the sample to analytical system.

6.4 Stainless Steel Tubing. Type 316, e.g., ⅜ in. diameter, and appropriate length for heated connections.

6.5 Gas Regulators. Appropriate for individual gas cylinders.

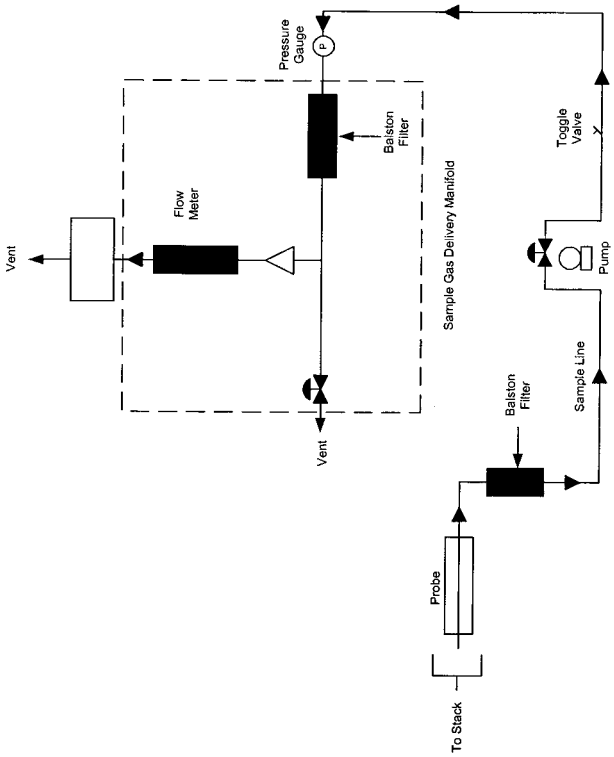

Figure 1. The extractive FTIR sampling system.

6.6 Teflon™ Tubing. Diameter (e.g., ⅜ in.) and length suitable to connect cylinder regulators.

6.7 Sample Pump. A leak-free pump (e.g., KNF™), with by-pass valve, capable of pulling sample through entire sampling system at a rate of about 10 to 20 L/min. If placed before the analytical system, heat the pump and use a pump fabricated from materials non-reactive to the target pollutants. If the pump is located after the instrument, systematically record the sample pressure in the gas cell.

6.8 Gas Sample Manifold. A heated manifold that diverts part of the sample stream to the analyzer, and the rest to the by-pass discharge vent or other analytical instrumentation.

6.9 Rotameter. A calibrated 0 to 20 L/min range rotameter.

6.10 FTIR Analytical System. Spectrometer and detector, capable of measuring formaldehyde, phenol, methanol, COS and CO to the predetermined minimum detectable level. The system shall include a personal computer with compatible software that provides real-time updates of the spectral profile during sample collection and spectral collection.

6.11 FTIR Cell Pump. Required for the evacuated sampling technique, capable of evacuating the FTIR cell volume within 2 minutes. The FTIR cell pump should allow the operator to obtain at least 8 sample spectra in 1 hour.

6.12 Absolute Pressure Gauge. Heatable and capable of measuring pressure from 0 to 1000 mmHg to within ±2.5 mmHg (e.g., Baratron™).

6.13 Temperature Gauge. Capable of measuring the cell temperature to within ±2 °C.

7.0 Reagents and Standards

7.1 Ethylene (Calibration Transfer Standard). Obtain NIST traceable (or Protocol) cylinder gas.

7.2 Nitrogen. Ultra high purity (UHP) grade.

7.3 Reference Spectra. Obtain reference spectra for the target pollutants at concentrations that bracket (in ppm-meter/K) the emission source levels. Also, obtain reference spectra for SF_6 and ethylene. Suitable concentrations are 0.0112 to 0.112 (ppm-meter)/K for SF_6 and 5.61 (ppm-meter)/K or less for ethylene. The reference spectra shall meet the criteria for acceptance outlined in Section 2.2.2. The optical density (ppm-meters/K) of the reference spectrum must match the optical density of the sample spectrum within (less than) 25 percent.

8.0 Sample Collection, Preservation, and Storage

Sampling should be performed in the following sequence: Collect background, collect CTS spectrum, collect samples, collect post-test CTS spectrum, verify that two copies of all data were stored on separate computer media.

8.1 Pretest Preparations and Evaluations. Using the procedure in Section 4.0 of the *FTIR Protocol*, determine the optimum sampling system configuration for sampling the target pollutants. Table 2 gives some example values for AU, DL, and MAU. Based on a study (Reference 1), an FTIR system using 1 cm^{-1} resolution, 22 meter path length, and a broad band MCT detector was suitable for meeting the requirements in Table 2. Other factors that must be determined are:

a. Test requirements: AU_i, $CMAX_i$, DL_i, OFU_i, and t_{AN} for each.

b. Interferants: See Table 1.

c. Sampling system: L_S', P_{min}, P_S', T_S', t_{SS}, V_{SS}; fractional error, MIL.

d. Analytical regions: 1 through N_m, FL_m, FC_m, and FU_m, plus interferants, FFU_m, FFL_m, wavenumber range FNU to FNL. See Tables 1 and 2.

8.1.1 If necessary, sample and acquire an initial spectrum. Then determine the proper operational pathlength of the instrument to obtain non-saturated absorbances of the target analytes.

8.1.2 Set up the sampling train as shown in Figure 1.

8.2 Sampling System Leak-check. Leak-check from the probe tip to pump outlet as follows: Connect a 0- to 250-mL/min rate meter (rotameter or bubble meter) to the outlet of the pump. Close off the inlet to the probe, and note the leakage rate. The leakage rate shall be ≤200 mL/min.

8.3 Analytical System Leak-check.

8.3.1 For the evacuated sample technique, close the valve to the FTIR cell, and evacuate the absorption cell to the minimum absolute pressure $P_{min.}$ Close the valve to the pump, and determine the change in pressure ΔP_v after 2 minutes.

8.3.2 For both the evacuated sample and purging techniques, pressurize the system to about 100 mmHg above atmospheric pressure. Isolate the pump and determine the change in pressure ΔP_p after 2 minutes.

8.3.3 Measure the barometric pressure, P_b in mmHg.

8.3.4 Determine the percent leak volume $\%V_L$ for the signal integration time t_{SS} and for ΔP_{max}, i.e., the larger of ΔP_v or ΔP_p, as follows:

$$\%V_L = 50\, t_{SS} \frac{\Delta P_{max}}{P_{SS}} \qquad (2)$$

Where:

50 = 100% divided by the leak-check time of 2 minutes.

8.3.5 Leak volumes in excess of 4 percent of the sample system volume V_{SS} are unacceptable.

8.4 Background Spectrum. Evacuate the gas cell to ≤5 mmHg, and fill with dry nitrogen gas to ambient pressure. Verify that no significant amounts of absorbing species (for example water vapor and CO_2) are present. Collect a background spectrum, using a signal averaging period equal to or greater than the averaging period for the sample spectra. Assign a unique file name to the background spectrum. Store the spectra of the background interferogram and processed single-beam background spectrum on two separate computer media (one is used as the back-up). If continuous sampling will be used during sample collection, collect the background spectrum with nitrogen gas flowing through the cell at the same pressure and temperature as will be used during sampling.

8.5 Pre-Test Calibration Transfer Standard. Evacuate the gas cell to ≤5 mmHg absolute pressure, and fill the FTIR cell to atmospheric pressure with the CTS gas. Or, purge the cell with 10 cell volumes of CTS gas. Record the spectrum. If continuous sampling will be used during sample collection, collect the CTS spectrum with CTS gas flowing through the cell at the same pressure and temperature as will be used during sampling.

8.6 Samples

8.6.1 Evacuated Samples. Evacuate the absorbance cell to ≤5 mmHg absolute pressure. Fill the cell with flue gas to ambient pressure and record the spectrum. Before taking the next sample, evacuate the cell until no further evidence of absorption exists. Repeat this procedure to collect at least 8 separate spectra (samples) in 1 hour.

8.6.2 Purge Sampling. Purge the FTIR cell with 10 cell volumes of flue gas and at least for about 10 minutes. Discontinue the gas cell purge, isolate the cell, and record the sample spectrum and the pressure. Before taking the next sample, purge the cell with 10 cell volumes of flue gas.

8.6.3 Continuous Sampling. Spectra can be collected continuously while the FTIR cell is being purged. The sample integration time, t_{ss}, the sample flow rate through the FTIR gas cell, and the total run time must be chosen so that the collected data consist of at least 10 spectra with each spectrum being of a separate cell volume of flue gas. More spectra can be collected over the run time and the total run time (and number of spectra) can be extended as well.

8.7 Sampling QA, Data Storage and Reporting

8.7.1 Sample integration times should be sufficient to achieve the required signal-to-noise ratios. Obtain an absorbance spectrum by filling the cell with nitrogen. Measure the RMSD in each analytical region in this absorbance spectrum. Verify that the number of scans is sufficient to achieve the target MAU (Table 2).

8.7.2 Identify all sample spectra with unique file names.

8.7.3 Store on two separate computer media a copy of sample interferograms and processed spectra. The data shall be available to the Administrator on request for the length of time specified in the applicable regulation.

8.7.4 For each sample spectrum, document the sampling conditions, the sampling time (while the cell was being filled), the time the spectrum was recorded, the instrumental conditions (path length, temperature, pressure, resolution, integration time), and the spectral file name. Keep a hard copy of these data sheets.

8.8 Signal Transmittance. While sampling, monitor the signal transmittance through the instrumental system. If signal transmittance (relative to the background) drops below 95 percent in any spectral region where the sample does not absorb infrared energy, obtain a new background spectrum.

8.9 Post-run CTS. After each sampling run, record another CTS spectrum.

8.10 Post-test QA

8.10.1 Inspect the sample spectra immediately after the run to verify that the gas matrix composition was close to the expected (assumed) gas matrix.

8.10.2 Verify that the sampling and instrumental parameters were appropriate for the conditions encountered. For example, if the moisture is much greater than anticipated, it will be necessary to use a shorter path length or dilute the sample.

8.10.3 Compare the pre and post-run CTS spectra. They shall agree to within −5 percent. See FTIR Protocol, Appendix E.

9.0 *Quality Control*

Follow the quality assurance procedures in the method, including the analysis of pre and post-run calibration transfer standards (Sections 8.5 and 8.9) and the post-test quality assurance procedures in Section 8.10.

10.0 *Calibration and Standardization*

10.1 Signal-to-Noise Ratio (S/N). The S/N shall be sufficient to meet the MAU in each analytical region.

10.2 Absorbance Pathlength. Verify the absorbance path length by comparing CTS spectra to reference spectra of the calibration gas(es). See FTIR Protocol, Appendix E.

10.3 Instrument Resolution. Measure the line width of appropriate CTS band(s) and compare to reference CTS spectra to verify instrumental resolution.

10.4 Apodization Function. Choose appropriate apodization function. Determine any appropriate mathematical transformations

that are required to correct instrumental errors by measuring the CTS. Any mathematical transformations must be documented and reproducible.

10.5 FTIR Cell Volume. Evacuate the cell to ≤5 mmHg. Measure the initial absolute temperature (T_i) and absolute pressure (P_i). Connect a wet test meter (or a calibrated dry gas meter), and slowly draw room air into the cell. Measure the meter volume (V_m), meter absolute temperature (T_m), and meter absolute pressure (P_m), and the cell final absolute temperature (T_f) and absolute pressure (P_f). Calculate the FTIR cell volume V_{ss}, including that of the connecting tubing, as follows:

$$V_{SS} = \frac{V_m \frac{P_m}{T_m}}{\left[\frac{P_f}{T_f} - \frac{P_i}{T_i}\right]} \qquad (8)$$

As an alternative to the wet test meter/calibrated dry gas meter procedure, measure the inside dimensions of the cell cylinder and calculate its volume.

11.0 Procedure

Refer to Sections 4.6–4.11, Sections 5, 6, and 7, and the appendices of the FTIR Protocol.

12.0 Data Analysis and Calculations

a. Data analysis is performed using appropriate reference spectra whose concentrations can be verified using CTS spectra. Various analytical programs are available to relate sample absorbance to a concentration standard. Calculated concentrations should be verified by analyzing spectral baselines after mathematically subtracting scaled reference spectra from the sample spectra. A full description of the data analysis and calculations may be found in the FTIR Protocol (Sections 4.0, 5.0, 6.0 and appendices).

b. Correct the calculated concentrations in sample spectra for differences in absorption pathlength between the reference and sample spectra by:

$$C_{corr} = \left[\frac{L_r}{L_s}\right]\left[\frac{T_s}{T_r}\right]C_{calc} \qquad (9)$$

Where:

C_{corr} = The pathlength corrected concentration.

C_{calc} = The initial calculated concentration (output of the Multicomp program designed for the compound).

L_r = The pathlength associated with the reference spectra.

L_s = The pathlength associated with the sample spectra.

T_s = The absolute temperature (K) of the sample gas.

T_r = The absolute gas temperature (K) at which reference spectra were recorded.

13.0 Reporting and Recordkeeping

All interferograms used in determining source concentration shall be stored for the period of time required in the applicable regulation. The Administrator has the option of requesting the interferograms recorded during the test in electronic form as part of the test report.

14.0 Method Performance

Refer to the FTIR Protocol.

15.0 Pollution Prevention. [Reserved]

16.0 Waste Management

Laboratory standards prepared from the formaldehyde and phenol are handled according to the instructions in the materials safety data sheets (MSDS).

17.0 References

(1) ''Field Validation Test Using Fourier Transform Infrared (FTIR) Spectrometry To Measure Formaldehyde, Phenol and Methanol at a Wool Fiberglass Production Facility.'' Draft. U.S. Environmental Protection Agency Report, Entropy, Inc., EPA Contract No. 68D20163, Work Assignment I–32, December 1994 (docket item II–A–13).

(2) ''Method 301—Field Validation of Pollutant Measurement Methods from Various Waste Media,'' 40 CFR part 63, appendix A.

METHOD 319—DETERMINATION OF FILTRATION EFFICIENCY FOR PAINT OVERSPRAY ARRESTORS

1.0 Scope and Application.

1.1 This method applies to the determination of the initial, particle size dependent, filtration efficiency for paint arrestors over the particle diameter range from 0.3 to 10 μm. The method applies to single and multiple stage paint arrestors or paint arrestor media. The method is applicable to efficiency determinations from 0 to 99 percent. Two test aerosols are used—one liquid phase and one solid phase. Oleic acid, a low-volatility liquid (CAS Number 112–80–1), is used to simulate the behavior of wet paint overspray. The solid-phase aerosol is potassium chloride salt (KCl, CAS Number 7447–40–7) and is used to simulate the behavior of a dry overspray. The method is limited to determination of the initial, clean filtration efficiency of the arrestor. Changes in efficiency (either increase or decrease) due to the accumulation of paint overspray on and within the arrestor are not evaluated.

1.2 Efficiency is defined as 1—Penetration (e.g., 70 percent efficiency is equal to 0.30

penetration). Penetration is based on the ratio of the downstream particle concentration to the upstream concentration. It is often more useful, from a mathematical or statistical point of view, to discuss the upstream and downstream counts in terms of penetration rather than the derived efficiency value. Thus, this document uses both penetration and efficiency as appropriate.

1.3 For a paint arrestor system or subsystem which has been tested by this method, adding additional filtration devices to the system or subsystem shall be assumed to result in an efficiency of at least that of the original system without the requirement for additional testing. (For example, if the final stage of a three-stage paint arrestor system has been tested by itself, then the addition of the other two stages shall be assumed to maintain, as a minimum, the filtration efficiency provided by the final stage alone. Thus, in this example, if the final stage has been shown to meet the filtration requirements of Table 1 of §63.745 of subpart GG, then the final stage in combination with any additional paint arrestor stages also passes the filtration requirements.)

2.0 Summary of Method.

2.1 This method applies to the determination of the fractional (i.e., particle-size dependent) aerosol penetration of several types of paint arrestors. Fractional penetration is computed from aerosol concentrations measured upstream and downstream of an arrestor installed in a laboratory test rig. The aerosol concentrations upstream and downstream of the arrestors are measured with an aerosol analyzer that simultaneously counts and sizes the particles in the aerosol stream. The aerosol analyzer covers the particle diameter size range from 0.3 to 10 μm in a minimum of 12 contiguous sizing channels. Each sizing channel covers a narrow range of particle diameters. For example, Channel 1 may cover from 0.3 to 0.4 μm, Channel 2 from 0.4 to 0.5 μm, * * * By taking the ratio of the downstream to upstream counts on a channel by channel basis, the penetration is computed for each of the sizing channels.

2.2 The upstream and downstream aerosol measurements are made while injecting the test aerosol into the air stream upstream of the arrestor (ambient aerosol is removed with HEPA filters on the inlet of the test rig). This test aerosol spans the particle size range from 0.3 to 10 μm and provides sufficient upstream concentration in each of the optical particle counter (OPC) sizing channels to allow accurate calculation of penetration, down to penetrations of approximately 0.01 (i.e., 1 percent penetration; 99 percent efficiency). Results are presented as a graph and a data table showing the aerodynamic particle diameter and the corresponding fractional efficiency.

3.0 Definitions.

Aerodynamic Diameter—diameter of a unit density sphere having the same aerodynamic properties as the particle in question.

Efficiency is defined as equal to 1—Penetration.

Optical Particle Counter (OPC)—an instrument that counts particles by size using light scattering. An OPC gives particle diameters based on size, index of refraction, and shape.

Penetration—the fraction of the aerosol that penetrates the filter at a given particle diameter. Penetration equals the downstream concentration divided by the upstream concentration.

4.0 Interferences.

4.1 The influence of the known interferences (particle losses) are negated by correction of the data using blanks.

5.0 Safety.

5.1 There are no specific safety precautions for this method above those of good laboratory practice. This standard does not purport to address all of the safety problems, if any, associated with its use. It is the responsibility of the user of this method to establish appropriate safety and health practices and determine the applicability of regulatory limitations prior to use.

6.0 Equipment and Supplies.

6.1 Test Facility. A schematic diagram of a test duct used in the development of the method is shown in Figure 319–1.

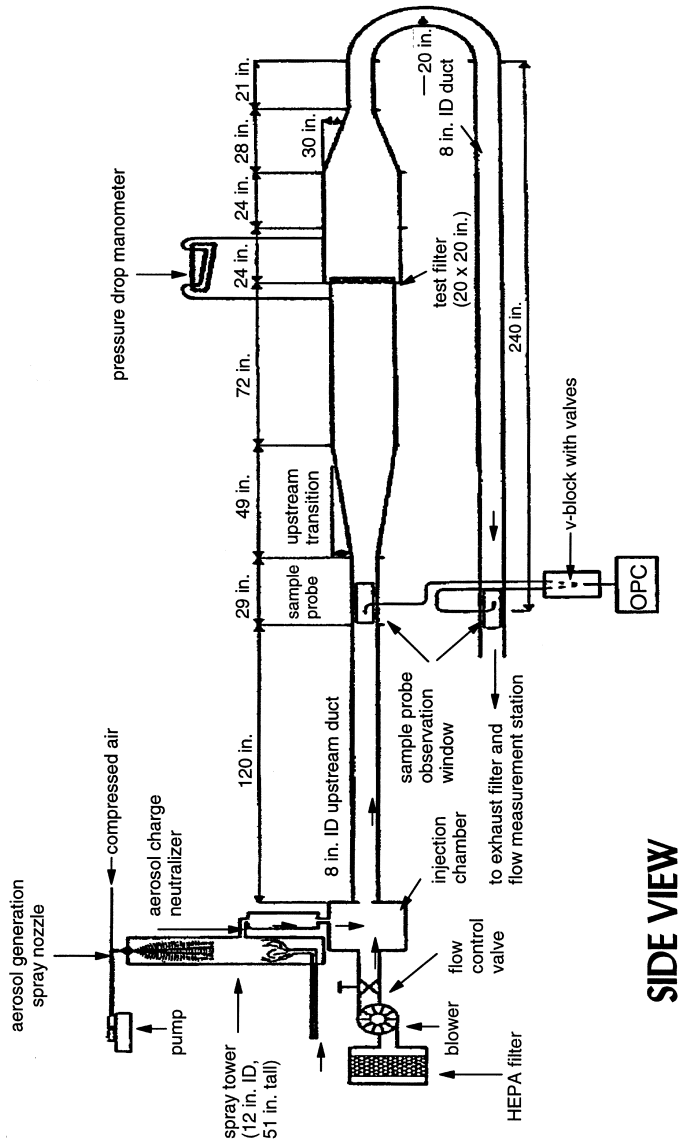

Figure 319-1. Schematic illustration of the fractional efficiency test rig.

6.1.1 The test section, paint spray section, and attached transitions are constructed of stainless and galvanized steel. The upstream and downstream ducting is 20 cm diameter polyvinyl chloride (PVC). The upstream transition provides a 7 ° angle of expansion to provide a uniform air flow distribution to the paint arrestors. Aerosol concentration is measured upstream and downstream of the test section to obtain the challenge and penetrating aerosol concentrations, respectively. Because the downstream ducting runs back under the test section, the challenge and penetrating aerosol taps are located physically near each other, thereby facilitating aerosol sampling and reducing sample-line length. The inlet nozzles of the upstream and downstream aerosol probes are

designed to yield isokinetic sampling conditions.

6.1.2 The configuration and dimensions of the test duct can deviate from those of Figure 319–1 provided that the following key elements are maintained: the test duct must meet the criteria specified in Table 319–1; the inlet air is HEPA filtered; the blower is on the upstream side of the duct thereby creating a positive pressure in the duct relative to the surrounding room; the challenge air has a temperature between 50 ° and 100 °F and a relative humidity of less than 65 percent; the angle of the upstream transition (if used) to the paint arrestor must not exceed 7 °; the angle of the downstream transition (if used) from the paint arrestor must not exceed 30 °; the test duct must provide a means for mixing the challenge aerosol with the upstream flow (in lieu of any mixing device, a duct length of 15 duct diameters fulfills this requirement); the test duct must provide a means for mixing any penetrating aerosol with the downstream flow (in lieu of any mixing device, a duct length of 15 duct diameters fulfills this requirement); the test section must provide a secure and leak-free mounting for single and multiple stage arrestors; and the test duct may utilize a 180 ° bend in the downstream duct.

TABLE 319–1.—QC CONTROL LIMITS

	Frequency and description	Control limits
OPC zero count	Each Test. OPC samples HEPA-filtered air.	<50 counts per minute.
OPC sizing accuracy check	Daily. Sample aerosolized PSL spheres	Peak of distribution should be in correct OPC channel.
Minimum counts per channel for challenge aerosol.	Each Test	Minimum total of 500 particle counts per channel.
Maximum particle concentration	Each Test. Needed to ensure OPC is not overloaded.	<10% of manufacturer's claimed upper limit corresponding to a 10% count error.
Standard Deviation of Penetration	Computed for each test based on the CV of the upstream and downstream counts.	<0.10 for 0.3 to 3 μm diameter. <0.30 for >3 μm diameter.
0% Penetration	Monthly	<0.01.
100% Penetration—KCl	Triplicate tests performed immediately before, during, or after triplicate arrestor tests.	0.3 to 1 μm: 0.90 to 1.10. 1 to 3 μm: 0.75 to 1.25. 3 to 10 μm: 0.50 to 1.50.
100% Penetration—Oleic Acid	Triplicate tests performed immediately before, during, or after triplicate arrestor tests.	0.3 to 1 μm: 0.90 to 1.10. 1 to 3 μm: 0.75 to 1.25. 3 to 10 μm: 0.50 to 1.50.

6.2 Aerosol Generator. The aerosol generator is used to produce a stable aerosol covering the particle size range from 0.3 to 10 μm diameter. The generator used in the development of this method consists of an air atomizing nozzle positioned at the top of a 0.30–m (12-in.) diameter, 1.3–m (51-in.) tall, acrylic, transparent, spray tower. This tower allows larger sized particles, which would otherwise foul the test duct and sample lines, to fall out of the aerosol. It also adds drying air to ensure that the KCl droplets dry to solid salt particles. After generation, the aerosol passes through an aerosol neutralizer (Kr85 radioactive source) to neutralize any electrostatic charge on the aerosol (electrostatic charge is an unavoidable consequence of most aerosol generation methods). To improve the mixing of the aerosol with the air stream, the aerosol is injected counter to the airflow. Generators of other designs may be used, but they must produce a stable aerosol concentration over the 0.3 to 10 μm diameter size range; provide a means of ensuring the complete drying of the KCl aerosol; and utilize a charge neutralizer to neutralize any electrostatic charge on the aerosol. The resultant challenge aerosol must meet the minimum count per channel and maximum concentration criteria of Table 319–1.

6.3 Installation of Paint Arrestor. The paint arrestor is to be installed in the test duct in a manner that precludes air bypassing the arrestor. Since arrestor media are often sold unmounted, a mounting frame may be used to provide back support for the media in addition to sealing it into the duct. The mounting frame for 20 in. x 20 in. arrestors will have minimum open internal dimensions of 18 in. square. Mounting frames for 24 in. x 24 in. arrestors will have minimum open internal dimensions of 22 in. square. The open internal dimensions of the mounting frame shall not be less than 75 percent of the approach duct dimensions.

6.4 Optical Particle Counter. The upstream and downstream aerosol concentrations are measured with a high-resolution optical particle counter (OPC). To ensure comparability of test results, the OPC shall utilize an optical design based on wide-angle light scattering and provided a minimum of 12 contiguous particle sizing channels from 0.3 to 10μm diameter (based on response to PSL) where, for each channel, the ratio of

the diameter corresponding to the upper channel bound to the lower channel bound must not exceed 1.5.

6.5 Aerosol Sampling System. The upstream and downstream sample lines must be made of rigid electrically-grounded metallic tubing having a smooth inside surface, and they must be rigidly secured to prevent movement during testing. The upstream and downstream sample lines are to be nominally identical in geometry. The use of a short length (100 mm maximum) of straight flexible tubing to make the final connection to the OPC is acceptable. The inlet nozzles of the upstream and downstream probes must be sharp-edged and of appropriate entrance diameter to maintain isokinetic sampling within 20 percent of the air velocity.

6.5.1 The sampling system may be designed to acquire the upstream and downstream samples using (a) sequential upstream-downstream sampling with a single OPC, (b) simultaneous upstream and downstream sampling with two OPC's, or (c) sequential upstream-downstream sampling with two OPC's.

6.5.2 When two particle counters are used to acquire the upstream and downstream counts, they must be closely matched in flowrate and optical design.

6.6 Airflow Monitor. The volumetric airflow through the system shall be measured with a calibrated orifice plate, flow nozzle, or laminar flow element. The measurement device must have an accuracy of 5 percent or better.

7.0 Reagents and Standards.

7.1 The liquid test aerosol is reagent grade, 98 percent pure, oleic acid (Table 319–2). The solid test aerosol is KCl aerosolized from a solution of KCl in water. In addition to the test aerosol, a calibration aerosol of monodisperse polystyrene latex (PSL) spheres is used to verify the calibration of the OPC.

TABLE 319–2.—PROPERTIES OF THE TEST AND CALIBRATION AEROSOLS

	Refractive index	Density, g/cm^3	Shape
Oleic Acid (liquid-phase challenge aerosol).	1.46 nonabsorbing	0.89	Spherical.
KCl (solid-phase challenge aerosol).	1.49	1.98	Cubic or agglomerated cubes.
PSL (calibration aerosol)	1.59 nonabsorbing	1.05	Spherical.

8.0 Sample Collection, Preservation, and Storage.

8.1 In this test, all sampling occurs in real-time, thus no samples are collected that require preservation or storage during the test. The paint arrestors are shipped and stored to avoid structural damage or soiling. Each arrestor may be shipped in its original box from the manufacturer or similar cardboard box. Arrestors are stored at the test site in a location that keeps them clean and dry. Each arrestor is clearly labeled for tracking purposes.

9.0 Quality Control.

9.1 Table 319–1 lists the QC control limits.

9.2 The standard deviation (σ) of the penetration (P) for a given test at each of the 15 OPC sizing channels is computed from the coefficient of variation (CV, the standard deviation divided by the mean) of the upstream and downstream measurements as:

$$\sigma_P = P\sqrt{\left(CV_{upstream}^2 + CV_{downstream}^2\right)} \qquad \text{(Eq. 319-1)}$$

For a properly operating system, the standard deviation of the penetration is < 0.10 at particle diameters from 0.3 to 3 μm and less than 0.30 at diameters > 3 μm.

9.3 Data Quality Objectives (DQO).

9.3.1 Fractional Penetration. From the triplicate tests of each paint arrestor model, the standard deviation for the penetration measurements at each particle size (i.e., for each sizing channel of the OPC) is computed as:

$$s = \left[\sum \left(P_i - \overline{P} \right)^2 / (n-1) \right]^{\frac{1}{2}} \qquad \text{(Eq. 319-2)}$$

where P_i represents an individual penetration measurement, and P the average of the 3 (n = 3) individual measurements.

9.3.2 Bias of the fractional penetration values is determined from triplicate no-filter and HEPA filter tests. These tests determine the measurement bias at 100 percent penetration and 0 percent penetration, respectively.

9.3.3 PSL-Equivalent Light Scattering Diameter. The precision and bias of the OPC sizing determination are based on sampling a known diameter of PSL and noting whether the particle counts peak in the correct channel of the OPC. This is a pass/fail measurement with no calculations involved.

9.3.4 Airflow. The precision of the measurement must be within 5 percent of the set point.

10.0 Calibration and Standardization.

10.1 Optical Particle Counter. The OPC must have an up-to-date factory calibration. Check the OPC zero at the beginning and end of each test by sampling HEPA-filtered air. Verify the sizing accuracy on a daily basis (for days when tests are performed) with 1-size PSL spheres.

10.2 Airflow Measurement. Airflow measurement devices must have an accuracy of 5 percent or better. Manometers used in conjunction with the orifice plate must be inspected prior to use for proper level, zero, and mechanical integrity. Tubing connections to the manometer must be free from kinks and have secure connections.

10.3 Pressure Drop. Measure pressure drop across the paint arrestor with an inclined manometer readable to within 0.01 in. H_2O. Prior to use, the level and zero of the manometer, and all tubing connections, must be inspected and adjusted as needed.

11.0 Procedure.

11.1 Filtration Efficiency. For both the oleic acid and KCl challenges, this procedure is performed in triplicate using a new arrestor for each test.

11.1.1 General Information and Test Duct Preparation

11.1.1.1 Use the ''Test Run Sheet'' form (Figure 319–2) to record the test information.

RUN SHEET

Part 1. General Information

Date and Time: _____

Test Operator: _____

Test #: _____

Paint Arrestor:

Brand/Model _____

Arrestor Assigned ID # _____

Condition of arrestor (i.e., is there any damage? Must be new condition to proceed):

_____

Manometer zero and level confirmed?

_____

Part 2. Clean Efficiency Test

Date and Time: _____

Optical Particle Counter:

20 min. warm up _____

Zero count (< 50 counts/min) _____

Daily PSL check _____

PSL Diam: _____ μm

File name for OPC data: _____

Test Conditions:

Air Flow: _____

Temp & RH: Temp _____ °F RH _____ %

Atm. Pressure: _____in. Hg

(From mercury barometer)

Aerosol Generator: (record all operating parameters)

_____

_____

_____

_____

Test Aerosol:

(Oleic acid or KCl) _____

Arrestor:

Pressure drop: at start _____ in. H_2O

at end _____ in. H_2O

Condition of arrestor at end of test (note any physical deterioration):

_____

_____

FIGURE 319–2. TEST RUN SHEET

Other report formats which contain the same information are acceptable.

11.1.1.2 Record the date, time, test operator, Test #, paint arrestor brand/model and its assigned ID number. For tests with no arrestor, record none.

11.1.1.3 Ensure that the arrestor is undamaged and is in ''new'' condition.

11.1.1.4 Mount the arrestor in the appropriate frame. Inspect for any airflow leak paths.

11.1.1.5 Install frame-mounted arrestor in the test duct. Examine the installed arrestor to verify that it is sealed in the duct. For tests with no arrestor, install the empty frame.

11.1.1.6 Visually confirm the manometer zero and level. Adjust as needed.

11.1.2 Clean Efficiency Test.

11.1.2.1 Record the date and time upon beginning this section.

11.1.2.2 Optical Particle Counter.

11.1.2.2.1 General: Operate the OPC per the manufacturer's instructions allowing a minimum of 20 minutes warm up before making any measurements.

11.1.2.2.2 Overload: The OPC will yield inaccurate data if the aerosol concentration it is attempting to measure exceeds its operating limit. To ensure reliable measurements, the maximum aerosol concentration will not exceed 10 percent of the manufacturer's claimed upper concentration limit corresponding to a 10 percent count error. If this value is exceeded, reduce the aerosol concentration until the acceptable conditions are met.

11.1.2.2.3 Zero Count: Connect a HEPA capsule to the inlet of the OPC and obtain printouts for three samples (each a minimum of 1-minute each). Record maximum cumulative zero count. If the count rate exceeds 50 counts per minute, the OPC requires servicing before continuing.

11.1.2.2.4 PSL Check of OPC Calibration: Confirm the calibration of the OPC by sampling a known size PSL aerosol. Aerosolize the PSL using an appropriate nebulizer. Record whether the peak count is observed in the proper channel. If the peak is not seen in the appropriate channel, have the OPC recalibrated.

11.1.2.3 Test Conditions:

11.1.2.3.1 Airflow: The test airflow corresponds to a nominal face velocity of 120 FPM through the arrestor. For arrestors having nominal 20 in. x 20 in. face dimensions, this measurement corresponds to an airflow of 333 cfm. For arrestors having nominal face dimensions of 24 in. x 24 in., this measurement corresponds to an airflow of 480 cfm.

11.1.2.3.2 Temperature and Relative Humidity: The temperature and relative humidity of the challenge air stream will be measured to within an accuracy of +/−2 °F and +/−10 percent RH. To protect the probe from fouling, it may be removed during periods of aerosol generation.

11.1.2.3.3 Barometric Pressure: Use a mercury barometer. Record the atmospheric pressure.

11.1.2.4 Upstream and Downstream Background Counts.

11.1.2.4.1 With the arrestor installed in the test duct and the airflow set at the proper value, turn on the data acquisition computer and bring up the data acquisition program.

11.1.2.4.2 Set the OPC settings for the appropriate test sample duration with output for both printer and computer data collection.

11.1.2.4.3 Obtain one set of upstream-downstream background measurements.

11.1.2.4.4 After obtaining the upstream-downstream measurements, stop data acquisition.

11.1.2.5 Efficiency Measurements:

11.1.2.5.1 Record the arrestor pressure drop.

11.1.2.5.2 Turn on the Aerosol Generator. Begin aerosol generation and record the operating parameters.

11.1.2.5.3 Monitor the particle counts. Allow a minimum of 5 minutes for the generator to stabilize.

11.1.2.5.4 Confirm that the total particle count does not exceed the predetermined upper limit. Adjust generator as needed.

11.1.2.5.5 Confirm that a minimum of 50 particle counts are measured in the upstream sample in each of the OPC channels per sample. (A minimum of 50 counts per channel per sample will yield the required minimum 500 counts per channel total for the 10 upstream samples as specified in Table 319–1.) Adjust generator or sample time as needed.

11.1.2.5.6 If you are unable to obtain a stable concentration within the concentration limit and with the 50 count minimum per channel, adjust the aerosol generator.

11.1.2.5.7 When the counts are stable, perform repeated upstream-downstream sampling until 10 upstream-downstream measurements are obtained.

11.1.2.5.8 After collection of the 10 upstream-downstream samples, stop data acquisition and allow 2 more minutes for final purging of generator.

11.1.2.5.9 Obtain one additional set of upstream-downstream background samples.

11.1.2.5.10 After obtaining the upstream-downstream background samples, stop data acquisition.

11.1.2.5.11 Record the arrestor pressure drop.

11.1.2.5.12 Turn off blower.

11.1.2.5.13 Remove the paint arrestor assembly from the test duct. Note any signs of physical deterioration.

11.1.2.5.14 Remove the arrestor from the frame and place the arrestor in an appropriate storage bag.

11.2 Control Test: 100 Percent Penetration Test. A 100 percent penetration test must be performed immediately before each individual paint arrestor test using the same challenge aerosol substance (i.e., oleic acid or KCl) as to be used in the arrestor test. These tests are performed with no arrestor installed in the test housing. This test is a relatively stringent test of the adequacy of the overall duct, sampling, measurement, and aerosol generation system. The test is performed as a normal penetration test except the paint arrestor is not used. A perfect system would yield a measured penetration of 1 at all particle sizes. Deviations from 1

can occur due to particle losses in the duct, differences in the degree of aerosol uniformity (i.e., mixing) at the upstream and downstream probes, and differences in particle transport efficiency in the upstream and downstream sampling lines.

11.3 Control Test: 0 Percent Penetration. One 0 percent penetration test must be performed at least monthly during testing. The test is performed by using a HEPA filter rather than a paint arrestor. This test assesses the adequacy of the instrument response time and sample line lag.

12.0 Data Analysis and Calculations.

12.1 Analysis. The analytical procedures for the fractional penetration and flow velocity measurements are described in Section 11. Note that the primary measurements, those of the upstream and downstream aerosol concentrations, are performed with the OPC which acquires the sample and analyzes it in real time. Because all the test data are collected in real time, there are no analytical procedures performed subsequent to the actual test, only data analysis.

12.2 Calculations.

12.2.1 Penetration.

Nomenclature

U = Upstream particle count

D = Downstream particle count

U_b = Upstream background count

D_b = Downstream background count

P_{100} = 100 percent penetration value determined immediately prior to the arrestor test computed for each channel as:

$$P_{100} = \frac{\left(\overline{D} - \overline{D_b}\right)}{\left(\overline{U} - \overline{U_b}\right)}$$

P = Penetration of the arrestor corrected for P_{100}

ρ= sample standard deviation

CV = coefficient of variation = ρ/mean

E = Efficiency.

Overbar denotes arithmetic mean of quantity.

Analysis of each test involves the following quantities:

- P_{100} value for each sizing channel from the 100 percent penetration control test,
- 2 upstream background values,
- 2 downstream background values,
- 10 upstream values with aerosol generator on, and
- 10 downstream values with aerosol generator on.

Using the values associated with each sizing channel, the penetration associated with each particle-sizing channel is calculated as:

$$P = \left\{\frac{\left(\overline{D} - \overline{D}_b\right)}{\left(\overline{U} - \overline{U}_b\right)}\right\} / P_{100} \qquad \text{(Eq. 319-3)}$$

$$E = 1 - P \qquad \text{(Eq. 319-4)}$$

Most often, the background levels are small compared to the values when the aerosol generator is on.

12.3 The relationship between the physical diameter ($D_{Physical}$) as measured by the OPC to the aerodynamic diameter (D_{Aero}) is given by:

$$D_{Aero} = D_{Physical}\sqrt{\frac{\rho_{Particle}}{\rho_o}\frac{CCF_{Physical}}{CCF_{Aero}}} \qquad \text{(Eq. 319-5)}$$

Where:

p_O = unit density of 1 g/cm³.

$p_{Particle}$ = the density of the particle, 0.89 g/cm³ for oleic acid.

$CCF_{Physical}$ = the Cunningham Correction Factor at $D_{Physical}$.

CCF_{Aero} = the Cunningham Correction Factor at D^{Aero}.

12.4 Presentation of Results. For a given arrestor, results will be presented for:

- Triplicate arrestor tests with the liquid-phase challenge aerosol,

sbull; Triplicate arrestor tests with the solid-phase challenge aerosol,

sbull; Triplicate 100 percent penetration tests with the liquid-phase challenge aerosol,

sbull; Triplicate 100 percent penetration tests with the solid-phase challenge aerosol, and

sbull; One 0 percent filter test (using either the liquid-phase or solid-phase aerosol and performed at least monthly).

12.4.1 Results for the paint arrestor test must be presented in both graphical and tabular form. The X-axis of the graph will be a logarithmic scale of aerodynamic diameter from 0.1 to 100 μm. The Y-axis will be efficiency (%) on a linear scale from 0 to 100. Plots for each individual run and a plot of

the average of triplicate solid-phase and of the average triplicate liquid-phase tests must be prepared. All plots are to be based on point-to-point plotting (i.e., no curve fitting is to be used). The data are to be plotted based on the geometric mean diameter of each of the OPC's sizing channels.

12.4.2 Tabulated data from each test must be provided. The data must include the upper and lower diameter bound and geometric mean diameter of each of the OPC sizing channels, the background particle counts for each channel for each sample, the upstream particle counts for each channel for each sample, the downstream particle counts for each channel for each sample, the 100 percent penetration values computed for each channel, and the 0 percent penetration values computed for each channel.

13.0 Pollution Prevention.

13.1 The quantities of materials to be aerosolized should be prepared in accord with the amount needed for the current tests so as to prevent wasteful excess.

14.0 Waste Management.

14.1 Paint arrestors may be returned to originator, if requested, or disposed of with regular laboratory waste.

15.0 References.

1. Hanley, J.T., D.D. Smith and L. Cox. ''Fractional Penetration of Paint Overspray Arrestors, Draft Final Report,'' EPA Cooperative Agreement CR–817083–01–0, January 1994.

2. Hanley, J.T., D.D. Smith, and D.S. Ensor. ''Define a Fractional Efficiency Test Method that is Compatible with Particulate Removal Air Cleaners Used in General Ventilation,'' Final Report, 671–RP, American Society of Heating, Refrigerating, and Air-Conditioning Engineers, Inc., December 1993.

3. ''Project Work and Quality Assurance Plan: Fractional Penetration of Paint Overspray Arrestors, Category II,'' EPA Cooperative Agreement No. CR–817083, July 1994.

TEST METHOD 320—MEASUREMENT OF VAPOR PHASE ORGANIC AND INORGANIC EMISSIONS BY EXTRACTIVE FOURIER TRANSFORM INFRARED (FTIR) SPECTROSCOPY

1.0 Introduction.

Persons unfamiliar with basic elements of FTIR spectroscopy should not attempt to use this method. This method describes sampling and analytical procedures for extractive emission measurements using Fourier transform infrared (FTIR) spectroscopy. Detailed analytical procedures for interpreting infrared spectra are described in the ''Protocol for the Use of Extractive Fourier Transform Infrared (FTIR) Spectrometry in Analyses of Gaseous Emissions from Stationary Sources,'' hereafter referred to as the ''Protocol.'' Definitions not given in this method are given in appendix A of the Protocol. References to specific sections in the Protocol are made throughout this Method. For additional information refer to references 1 and 2, and other EPA reports, which describe the use of FTIR spectrometry in specific field measurement applications and validation tests. The sampling procedure described here is extractive. Flue gas is extracted through a heated gas transport and handling system. For some sources, sample conditioning systems may be applicable. Some examples are given in this method.

NOTE: sample conditioning systems may be used providing the method validation requirements in Sections 9.2 and 13.0 of this method are met.

1.1 Scope and Applicability.

1.1.1 *Analytes.* Analytes include hazardous air pollutants (HAPs) for which EPA reference spectra have been developed. Other compounds can also be measured with this method if reference spectra are prepared according to section 4.6 of the protocol.

1.1.2 *Applicability.* This method applies to the analysis of vapor phase organic or inorganic compounds which absorb energy in the mid-infrared spectral region, about 400 to 4000 cm^{-1} (25 to 2.5 μm). This method is used to determine compound-specific concentrations in a multi-component vapor phase sample, which is contained in a closed-path gas cell. Spectra of samples are collected using double beam infrared absorption spectroscopy. A computer program is used to analyze spectra and report compound concentrations.

1.2 *Method Range and Sensitivity.* Analytical range and sensitivity depend on the frequency-dependent analyte absorptivity, instrument configuration, data collection parameters, and gas stream composition. Instrument factors include: (a) spectral resolution, (b) interferometer signal averaging time, (c) detector sensitivity and response, and (d) absorption path length.

1.2.1 For any optical configuration the analytical range is between the absorbance values of about .01 (infrared transmittance relative to the background = 0.98) and 1.0 (T = 0.1). (For absorbance > 1.0 the relation between absorbance and concentration may not be linear.)

1.2.2 The concentrations associated with this absorbance range depend primarily on the cell path length and the sample temperature. An analyte absorbance greater than 1.0, can be lowered by decreasing the optical path length. Analyte absorbance increases with a longer path length. Analyte detection also depends on the presence of other species exhibiting absorbance in the same analytical

region. Additionally, the estimated lower absorbance (A) limit
(A = 0.01) depends on the root mean square deviation (RMSD) noise in the analytical region.

1.2.3 The concentration range of this method is determined by the choice of optical configuration.

1.2.3.1 The absorbance for a given concentration can be decreased by decreasing the path length or by diluting the sample. There is no practical upper limit to the measurement range.

1.2.3.2 The analyte absorbance for a given concentration may be increased by increasing the cell path length or (to some extent) using a higher resolution. Both modifications also cause a corresponding increased absorbance for all compounds in the sample, and a decrease in the signal throughput. For this reason the practical lower detection range (quantitation limit) usually depends on sample characteristics such as moisture content of the gas, the presence of other interferants, and losses in the sampling system.

1.3 *Sensitivity*. The limit of sensitivity for an optical configuration and integration time is determined using appendix D of the Protocol: Minimum Analyte Uncertainty, (MAU). The MAU depends on the RMSD noise in an analytical region, and on the absorptivity of the analyte in the same region.

1.4 *Data Quality*. Data quality shall be determined by executing Protocol pre-test procedures in appendices B to H of the protocol and post-test procedures in appendices I and J of the protocol.

1.4.1 Measurement objectives shall be established by the choice of detection limit (DL_i) and analytical uncertainty (AU_i) for each analyte.

1.4.2 An instrumental configuration shall be selected. An estimate of gas composition shall be made based on previous test data, data from a similar source or information gathered in a pre-test site survey. Spectral interferants shall be identified using the selected DL_i and AU_i and band areas from reference spectra and interferant spectra. The baseline noise of the system shall be measured in each analytical region to determine the MAU of the instrument configuration for each analyte and interferant (MIU_i).

1.4.3 Data quality for the application shall be determined, in part, by measuring the RMS (root mean square) noise level in each analytical spectral region (appendix C of the Protocol). The RMS noise is defined as the RMSD of the absorbance values in an analytical region from the mean absorbance value in the region.

1.4.4 The MAU is the minimum analyte concentration for which the AU_i can be maintained; if the measured analyte concentration is less than MAU_i then data quality are unacceptable.

2.0 *Summary of Method*

2.1 *Principle*. References 4 through 7 provide background material on infrared spectroscopy and quantitative analysis. A summary is given in this section.

2.1.1 Infrared absorption spectroscopy is performed by directing an infrared beam through a sample to a detector. The frequency-dependent infrared absorbance of the sample is measured by comparing this detector signal (single beam spectrum) to a signal obtained without a sample in the beam path (background).

2.1.2 Most molecules absorb infrared radiation and the absorbance occurs in a characteristic and reproducible pattern. The infrared spectrum measures fundamental molecular properties and a compound can be identified from its infrared spectrum alone.

2.1.3 Within constraints, there is a linear relationship between infrared absorption and compound concentration. If this frequency dependent relationship (absorptivity) is known (measured), it can be used to determine compound concentration in a sample mixture.

2.1.4 Absorptivity is measured by preparing, in the laboratory, standard samples of compounds at known concentrations and measuring the FTIR ''reference spectra'' of these standard samples. These ''reference spectra'' are then used in sample analysis: (1) Compounds are detected by matching sample absorbance bands with bands in reference spectra, and (2) concentrations are measured by comparing sample band intensities with reference band intensities.

2.1.5 This method is self-validating provided that the results meet the performance requirement of the QA spike in sections 8.6.2 and 9.0 of this method, and results from a previous method validation study support the use of this method in the application.

2.2 *Sampling and Analysis*. In extractive sampling a probe assembly and pump are used to extract gas from the exhaust of the affected source and transport the sample to the FTIR gas cell. Typically, the sampling apparatus is similar to that used for single-component continuous emission monitor (CEM) measurements.

2.2.1 The digitized infrared spectrum of the sample in the FTIR gas cell is measured and stored on a computer. Absorbance band intensities in the spectrum are related to sample concentrations by what is commonly referred to as Beer's Law.

$$A_i = a_i b c_i \qquad (1)$$

Where:

A_i = absorbance at a given frequency of the ith sample component.

a_i = absorption coefficient (absorptivity) of the ith sample component.

b = path length of the cell.

c_i = concentration of the ith sample component.

2.2.2 Analyte spiking is used for quality assurance (QA). In this procedure (section 8.6.2 of this method) an analyte is spiked into the gas stream at the back end of the sample probe. Analyte concentrations in the spiked samples are compared to analyte concentrations in unspiked samples. Since the concentration of the spike is known, this procedure can be used to determine if the sampling system is removing the spiked analyte(s) from the sample stream.

2.3 *Reference Spectra Availability*. Reference spectra of over 100 HAPs are available in the EPA FTIR spectral library on the EMTIC (Emission Measurement Technical Information Center) computer bulletin board service and at internet address http://info.arnold.af.mil/epa/welcome.htm. Reference spectra for HAPs, or other analytes, may also be prepared according to section 4.6 of the Protocol.

2.4 *Operator Requirements*. The FTIR analyst shall be trained in setting up the instrumentation, verifying the instrument is functioning properly, and performing routine maintenance. The analyst must evaluate the initial sample spectra to determine if the sample matrix is consistent with pre-test assumptions and if the instrument configuration is suitable. The analyst must be able to modify the instrument configuration, if necessary.

2.4.1 The spectral analysis shall be supervised by someone familiar with EPA FTIR Protocol procedures.

2.4.2 A technician trained in instrumental test methods is qualified to install and operate the sampling system. This includes installing the probe and heated line assembly, operating the analyte spike system, and performing moisture and flow measurements.

3.0 Definitions

See appendix A of the Protocol for definitions relating to infrared spectroscopy. Additional definitions are given in sections 3.1 through 3.29.

3.1 *Analyte*. A compound that this method is used to measure. The term ''target analyte'' is also used. This method is multicomponent and a number of analytes can be targeted for a test.

3.2 *Reference Spectrum*. Infrared spectrum of an analyte prepared under controlled, documented, and reproducible laboratory conditions according to procedures in section 4.6 of the Protocol. A library of reference spectra is used to measure analytes in gas samples.

3.3 *Standard Spectrum*. A spectrum that has been prepared from a reference spectrum through a (documented) mathematical operation. A common example is de-resolving of reference spectra to lower-resolution standard spectra (Protocol, appendix K to the addendum of this method). Standard spectra, prepared by approved, and documented, procedures can be used as reference spectra for analysis.

3.4 *Concentration*. In this method concentration is expressed as a molar concentration, in ppm-meters, or in (ppm-meters)/K, where K is the absolute temperature (Kelvin). The latter units allow the direct comparison of concentrations from systems using different optical configurations or sampling temperatures.

3.5 *Interferant*. A compound in the sample matrix whose infrared spectrum overlaps with part of an analyte spectrum. The most accurate analyte measurements are achieved when reference spectra of interferants are used in the quantitative analysis with the analyte reference spectra. The presence of an interferant can increase the analytical uncertainty in the measured analyte concentration.

3.6 *Gas Cell*. A gas containment cell that can be evacuated. It is equipped with the optical components to pass the infrared beam through the sample to the detector. Important cell features include: path length (or range if variable), temperature range, materials of construction, and total gas volume.

3.7 *Sampling System*. Equipment used to extract the sample from the test location and transport the sample gas to the FTIR analyzer. This includes sample conditioning systems.

3.8 *Sample Analysis*. The process of interpreting the infrared spectra to obtain sample analyte concentrations. This process is usually automated using a software routine employing a classical least squares (cls), partial least squares (pls), or K- or P-matrix method.

3.9 *One hundred percent line*. A double beam transmittance spectrum obtained by combining two background single beam spectra. Ideally, this line is equal to 100 percent transmittance (or zero absorbance) at every frequency in the spectrum. Practically, a zero absorbance line is used to measure the baseline noise in the spectrum.

3.10 *Background Deviation*. A deviation from 100 percent transmittance in any region of the 100 percent line. Deviations greater than ±5 percent in an analytical region are unacceptable (absorbance of 0.021 to −0.022). Such deviations indicate a change in the instrument throughput relative to the background single beam.

3.11 *Batch Sampling*. A procedure where spectra of discreet, static samples are collected. The gas cell is filled with sample and the cell is isolated. The spectrum is collected. Finally, the cell is evacuated to prepare for the next sample.

3.12 *Continuous Sampling*. A procedure where spectra are collected while sample gas

is flowing through the cell at a measured rate.

3.13 *Sampling resolution*. The spectral resolution used to collect sample spectra.

3.14 *Truncation*. Limiting the number of interferogram data points by deleting points farthest from the center burst (zero path difference, ZPD).

3.15 *Zero filling*. The addition of points to the interferogram. The position of each added point is interpolated from neighboring real data points. Zero filling adds no information to the interferogram, but affects line shapes in the absorbance spectrum (and possibly analytical results).

3.16 *Reference CTS*. Calibration Transfer Standard spectra that were collected with reference spectra.

3.17 *CTS Standard*. CTS spectrum produced by applying a de-resolution procedure to a reference CTS.

3.18 *Test CTS*. CTS spectra collected at the sampling resolution using the same optical configuration as for sample spectra. Test spectra help verify the resolution, temperature and path length of the FTIR system.

3.19 *RMSD*. Root Mean Square Difference, defined in EPA FTIR Protocol, appendix A.

3.20 *Sensitivity*. The noise-limited compound-dependent detection limit for the FTIR system configuration. This is estimated by the MAU. It depends on the RMSD in an analytical region of a zero absorbance line.

3.21 *Quantitation Limit*. The lower limit of detection for the FTIR system configuration in the sample spectra. This is estimated by mathematically subtracting scaled reference spectra of analytes and interferences from sample spectra, then measuring the RMSD in an analytical region of the subtracted spectrum. Since the noise in subtracted sample spectra may be much greater than in a zero absorbance spectrum, the quantitation limit is generally much higher than the sensitivity. Removing spectral interferences from the sample or improving the spectral subtraction can lower the quantitation limit toward (but not below) the sensitivity.

3.22 *Independent Sample*. A unique volume of sample gas; there is no mixing of gas between two consecutive independent samples. In continuous sampling two independent samples are separated by at least 5 cell volumes. The interval between independent measurements depends on the cell volume and the sample flow rate (through the cell).

3.23 *Measurement*. A single spectrum of flue gas contained in the FTIR cell.

3.24 *Run*. A run consists of a series of measurements. At a minimum a run includes 8 independent measurements spaced over 1 hour.

3.25 *Validation*. Validation of FTIR measurements is described in sections 13.0 through 13.4 of this method. Validation is used to verify the test procedures for measuring specific analytes at a source. Validation provides proof that the method works under certain test conditions.

3.26 *Validation Run*. A validation run consists of at least 24 measurements of independent samples. Half of the samples are spiked and half are not spiked. The length of the run is determined by the interval between independent samples.

3.27 *ning*. Screening is used when there is little or no available information about a source. The purpose of screening is to determine what analytes are emitted and to obtain information about important sample characteristics such as moisture, temperature, and interferences. Screening results are semi-quantitative (estimated concentrations) or qualitative (identification only). Various optical and sampling configurations may be used. Sample conditioning systems may be evaluated for their effectiveness in removing interferences. It is unnecessary to perform a complete run under any set of sampling conditions. Spiking is not necessary, but spiking can be a useful screening tool for evaluating the sampling system, especially if a reactive or soluble analyte is used for the spike.

3.28 *Emissions Test*. An FTIR emissions test is performed according specific sampling and analytical procedures. These procedures, for the target analytes and the source, are based on previous screening and validation results. Emission results are quantitative. A QA spike (sections 8.6.2 and 9.2 of this method) is performed under each set of sampling conditions using a representative analyte. Flow, gas temperature and diluent data are recorded concurrently with the FTIR measurements to provide mass emission rates for detected compounds.

3.29 *Surrogate*. A surrogate is a compound that is used in a QA spike procedure (section 8.6.2 of this method) to represent other compounds. The chemical and physical properties of a surrogate shall be similar to the compounds it is chosen to represent. Under given sampling conditions, usually a single sampling factor is of primary concern for measuring the target analytes: for example, the surrogate spike results can be representative for analytes that are more reactive, more soluble, have a lower absorptivity, or have a lower vapor pressure than the surrogate itself.

4.0 Interferences

Interferences are divided into two classifications: analytical and sampling.

4.1 *Analytical Interferences*. An analytical interference is a spectral feature that complicates (in extreme cases may prevent) the analysis of an analyte. Analytical interferences are classified as background or spectral interference.

4.1.1 *Background Interference*. This results from a change in throughput relative to the

single beam background. It is corrected by collecting a new background and proceeding with the test. In severe instances the cause must be identified and corrected. Potential causes include: (1) Deposits on reflective surfaces or transmitting windows, (2) changes in detector sensitivity, (3) a change in the infrared source output, or (4) failure in the instrument electronics. In routine sampling throughput may degrade over several hours. Periodically a new background must be collected, but no other corrective action will be required.

4.1.2 *Spectral Interference.* This results from the presence of interfering compound(s) (interferant) in the sample. Interferant spectral features overlap analyte spectral features. Any compound with an infrared spectrum, including analytes, can potentially be an interferant. The Protocol measures absorbance band overlap in each analytical region to determine if potential interferants shall be classified as known interferants (FTIR Protocol, section 4.9 and appendix B). Water vapor and CO_2 are common spectral interferants. Both of these compounds have strong infrared spectra and are present in many sample matrices at high concentrations relative to analytes. The extent of interference depends on the (1) interferant concentration, (2) analyte concentration, and (3) the degree of band overlap. Choosing an alternate analytical region can minimize or avoid the spectral interference. For example, CO_2 interferes with the analysis of the 670 cm_{-1} benzene band. However, benzene can also be measured near 3000 cm^{-1} (with less sensitivity).

4.2 *Sampling System Interferences.* These prevent analytes from reaching the instrument. The analyte spike procedure is designed to measure sampling system interference, if any.

4.2.1 *Temperature.* A temperature that is too low causes condensation of analytes or water vapor. The materials of the sampling system and the FTIR gas cell usually set the upper limit of temperature.

4.2.2 *Reactive Species.* Anything that reacts with analytes. Some analytes, like formaldehyde, polymerize at lower temperatures.

4.2.3 *Materials.* Poor choice of material for probe, or sampling line may remove some analytes. For example, HF reacts with glass components.

4.2.4 *Moisture.* In addition to being a spectral interferant, condensed moisture removes soluble compounds.

5.0 Safety

The hazards of performing this method are those associated with any stack sampling method and the same precautions shall be followed. Many HAPs are suspected carcinogens or present other serious health risks. Exposure to these compounds should be avoided in all circumstances. For instructions on the safe handling of any particular compound, refer to its material safety data sheet. When using analyte standards, always ensure that gases are properly vented and that the gas handling system is leak free. (Always perform a leak check with the system under maximum vacuum and, again, with the system at greater than ambient pressure.) Refer to section 8.2 of this method for leak check procedures. This method does not address all of the potential safety risks associated with its use. Anyone performing this method must follow safety and health practices consistent with applicable legal requirements and with prudent practice for each application.

6.0 Equipment and Supplies

NOTE: Mention of trade names or specific products does not constitute endorsement by the Environmental Protection Agency.

The equipment and supplies are based on the schematic of a sampling system shown in Figure 1. Either the batch or continuous sampling procedures may be used with this sampling system. Alternative sampling configurations may also be used, provided that the data quality objectives are met as determined in the post-analysis evaluation. Other equipment or supplies may be necessary, depending on the design of the sampling system or the specific target analytes.

6.1 *Sampling Probe.* Glass, stainless steel, or other appropriate material of sufficient length and physical integrity to sustain heating, prevent adsorption of analytes, and to transport analytes to the infrared gas cell. Special materials or configurations may be required in some applications. For instance, high stack sample temperatures may require special steel or cooling the probe. For very high moisture sources it may be desirable to use a dilution probe.

6.2 *Particulate Filters.* A glass wool plug (optional) inserted at the probe tip (for large particulate removal) and a filter (required) rated for 99 percent removal efficiency at 1-micron (e.g., Balston'') connected at the outlet of the heated probe.

6.3 *Sampling Line/Heating System.* Heated (sufficient to prevent condensation) stainless steel, polytetrafluoroethane, or other material inert to the analytes.

6.4 *Gas Distribution Manifold.* A heated manifold allowing the operator to control flows of gas standards and samples directly to the FTIR system or through sample conditioning systems. Usually includes heated flow meter, heated valve for selecting and sending sample to the analyzer, and a bypass vent. This is typically constructed of stainless steel tubing and fittings, and high-temperature valves.

6.5 *Stainless Steel Tubing.* Type 316, appropriate diameter (e.g., 3/8 in.) and length for

heated connections. Higher grade stainless may be desirable in some applications.

6.6 Calibration/Analyte Spike Assembly. A three way valve assembly (or equivalent) to introduce analyte or surrogate spikes into the sampling system at the outlet of the probe upstream of the out-of-stack particulate filter and the FTIR analytical system.

6.7 *Mass Flow Meter (MFM).* These are used for measuring analyte spike flow. The MFM shall be calibrated in the range of 0 to 5 L/min and be accurate to ± 2 percent (or better) of the flow meter span.

6.8 *Gas Regulators.* Appropriate for individual gas standards.

6.9 *Polytetrafluoroethane Tubing.* Diameter (e.g., ⅜ in.) and length suitable to connect cylinder regulators to gas standard manifold.

6.10 *Sample Pump.* A leak-free pump (e.g., KNF™), with by-pass valve, capable of producing a sample flow rate of at least 10 L/min through 100 ft of sample line. If the pump is positioned upstream of the distribution manifold and FTIR system, use a heated pump that is constructed from materials non-reactive to the analytes. If the pump is located downstream of the FTIR system, the gas cell sample pressure will be lower than ambient pressure and it must be recorded at regular intervals.

6.11 *Gas Sample Manifold.* Secondary manifold to control sample flow at the inlet to the FTIR manifold. This is optional, but includes a by-pass vent and heated rotameter.

6.12 *Rotameter.* A 0 to 20 L/min rotameter. This meter need not be calibrated.

6.13 *FTIR Analytical System.* Spectrometer and detector, capable of measuring the analytes to the chosen detection limit. The system shall include a personal computer with compatible software allowing automated collection of spectra.

6.14 *FTIR Cell Pump.* Required for the batch sampling technique, capable of evacuating the FTIR cell volume within 2 minutes. The pumping speed shall allow the operator to obtain 8 sample spectra in 1 hour.

6.15 *Absolute Pressure Gauge.* Capable of measuring pressure from 0 to 1000 mmHg to within±2.5 mmHg (e.g., Baratron™).

6.16 *Temperature Gauge.* Capable of measuring the cell temperature to within±2 °C.

6.17 *Sample Conditioning.* One option is a condenser system, which is used for moisture removal. This can be helpful in the measurement of some analytes. Other sample conditioning procedures may be devised for the removal of moisture or other interfering species.

6.17.1 The analyte spike procedure of section 9.2 of this method, the QA spike procedure of section 8.6.2 of this method, and the validation procedure of section 13 of this method demonstrate whether the sample conditioning affects analyte concentrations. Alternatively, measurements can be made with two parallel FTIR systems; one measuring conditioned sample, the other measuring unconditioned sample.

6.17.2 Another option is sample dilution. The dilution factor measurement must be documented and accounted for in the reported concentrations. An alternative to dilution is to lower the sensitivity of the FTIR system by decreasing the cell path length, or to use a short-path cell in conjunction with a long path cell to measure more than one concentration range.

7.0 Reagents and Standards

7.1 *Analyte(s) and Tracer Gas.* Obtain a certified gas cylinder mixture containing all of the analyte(s) at concentrations within±2 percent of the emission source levels (expressed in ppm-meter/K). If practical, the analyte standard cylinder shall also contain the tracer gas at a concentration which gives a measurable absorbance at a dilution factor of at least 10:1. Two ppm SF_6 is sufficient for a path length of 22 meters at 250 °F.

7.2 *Calibration Transfer Standard(s).* Select the calibration transfer standards (CTS) according to section 4.5 of the FTIR Protocol. Obtain a National Institute of Standards and Technology (NIST) traceable gravimetric standard of the CTS (±2 percent).

7.3 *Reference Spectra.* Obtain reference spectra for each analyte, interferant, surrogate, CTS, and tracer. If EPA reference spectra are not available, use reference spectra prepared according to procedures in section 4.6 of the EPA FTIR Protocol.

8.0 Sampling and Analysis Procedure

Three types of testing can be performed: (1) Screening, (2) emissions test, and (3) validation. Each is defined in section 3 of this method. Determine the purpose(s) of the FTIR test. Test requirements include: (a) AU_i, DL_i, overall fractional uncertainty, OFU_i, maximum expected concentration ($CMAX_i$), and t_{AN} for each, (b) potential interferants, (c) sampling system factors, e.g., minimum absolute cell pressure, (P_{min}), FTIR cell volume (V_{SS}), estimated sample absorption pathlength, L_S', estimated sample pressure, P_S', T_S', signal integration time (t_{SS}), minimum instrumental linewidth, MIL, fractional error, and (d) analytical regions, e.g., m = 1 to M, lower wavenumber position, FLm, center wavenumber position, FC_m, and upper wavenumber position, FU_m, plus interferants, upper wavenumber position of the CTS absorption band, FFU_m, lower wavenumber position of the CTS absorption band, FFL_m, wavenumber range FNU to FNL. If necessary, sample and acquire an initial spectrum. From analysis of this preliminary spectrum determine a suitable operational path length. Set up the sampling train as shown in Figure 1 or use an appropriate alternative configuration. Sections 8.1 through 8.11 of this method provide guidance on pre-

test calculations in the EPA protocol, sampling and analytical procedures, and post-test protocol calculations.

8.1 *Pretest Preparations and Evaluations.* Using the procedure in section 4.0 of the FTIR Protocol, determine the optimum sampling system configuration for measuring the target analytes. Use available information to make reasonable assumptions about moisture content and other interferences.

8.1.1 *Analytes.* Select the required detection limit (DL_i) and the maximum permissible analytical uncertainty (AU_i) for each analyte (labeled from 1 to i). Estimate, if possible, the maximum expected concentration for each analyte, $CMAX_i$. The expected measurement range is fixed by DL_i and $CMAX_i$ for each analyte (i).

8.1.2 *Potential Interferants.* List the potential interferants. This usually includes water vapor and CO_2, but may also include some analytes and other compounds.

8.1.3. *Optical Configuration.* Choose an optical configuration that can measure all of the analytes within the absorbance range of .01 to 1.0 (this may require more than one path length). Use Protocol sections 4.3 to 4.8 for guidance in choosing a configuration and measuring CTS.

8.1.4 *Fractional Reproducibility Uncertainty (FRU_i).* The FRU is determined for each analyte by comparing CTS spectra taken before and after the reference spectra were measured. The EPA para-xylene reference spectra were collected on 10/31/91 and 11/01/91 with corresponding CTS spectra ''cts1031a,'' and ''cts1101b.'' The CTS spectra are used to estimate the reproducibility (FRU) in the system that was used to collect the references. The FRU must be < AU. Appendix E of the protocol is used to calculate the FRU from CTS spectra. Figure 2 plots results for 0.25 cm^{-1} CTS spectra in EPA reference library: S_3 (cts1101b − cts1031a), and S_4 [(cts1101b+cts1031a)/2]. The RMSD (SRMS) is calculated in the subtracted baseline, S_3, in the corresponding CTS region from 850 to 1065 cm^{-1}. The area (BAV) is calculated in the same region of the averaged CTS spectrum, S_4.

8.1.5 *Known Interferants.* Use appendix B of the EPA FTIR Protocol.

8.1.6 Calculate the Minimum Analyte Uncertainty, MAU (section 1.3 of this method discusses MAU and protocol appendix D gives the MAU procedure). The MAU for each analyte, i, and each analytical region, m, depends on the RMS noise.

8.1.7 *Analytical Program.* See FTIR Protocol, section 4.10. Prepare computer program based on the chosen analytical technique. Use as input reference spectra of all target analytes and expected interferants. Reference spectra of additional compounds shall also be included in the program if their presence (even if transient) in the samples is considered possible. The program output shall be in ppm (or ppb) and shall be corrected for differences between the reference path length, L_R, temperature, T_R, and pressure, P_R, and the conditions used for collecting the sample spectra. If sampling is performed at ambient pressure, then any pressure correction is usually small relative to corrections for path length and temperature, and may be neglected.

8.2 Leak-Check

8.2.1 *Sampling System.* A typical FTIR extractive sampling train is shown in Figure 1. Leak check from the probe tip to pump outlet as follows: Connect a 0-to 250-mL/min rate meter (rotameter or bubble meter) to the outlet of the pump. Close off the inlet to the probe, and record the leak rate. The leak rate shall be ≤200 mL/min.

8.2.2 *Analytical System Leak check.* Leak check the FTIR cell under vacuum and under pressure (greater than ambient). Leak check connecting tubing and inlet manifold under pressure.

8.2.2.1 For the evacuated sample technique, close the valve to the FTIR cell, and evacuate the absorption cell to the minimum absolute pressure $P_{min.}$ Close the valve to the pump, and determine the change in pressure ΔP_v after 2 minutes.

8.2.2.2 For both the evacuated sample and purging techniques, pressurize the system to about 100 mmHg above atmospheric pressure. Isolate the pump and determine the change in pressure ΔP_p after 2 minutes.

8.2.2.3 Measure the barometric pressure, P_b in mmHg.

8.2.2.4 Determine the percent leak volume $\%V_L$ for the signal integration time t_{SS} and for ΔP_{max}, i.e., the larger of ΔP_v or ΔP_p, as follows:

$$\%V_L = 50 t_{SS} \frac{\Delta P_{max}}{P_{SS}} \qquad (2)$$

where 50 = 100% divided by the leak-check time of 2 minutes. 8.2.2.5 Leak volumes in excess of 4 percent of the FTIR system volume V_{SS} are unacceptable.

8.3 *Detector Linearity.* Once an optical configuration is chosen, use one of the procedures of sections 8.3.1 through 8.3.3 to verify that the detector response is linear. If the detector response is not linear, decrease the aperture, or attenuate the infrared beam. After a change in the instrument configuration perform a linearity check until it is demonstrated that the detector response is linear.

8.3.1 Vary the power incident on the detector by modifying the aperture setting. Measure the background and CTS at three instrument aperture settings: (1) at the aperture setting to be used in the testing, (2) at one half this aperture and (3) at twice the proposed testing aperture. Compare the

three CTS spectra. CTS band areas shall agree to within the uncertainty of the cylinder standard and the RMSD noise in the system. If test aperture is the maximum aperture, collect CTS spectrum at maximum aperture, then close the aperture to reduce the IR throughput by half. Collect a second background and CTS at the smaller aperture setting and compare the spectra again.

8.3.2 Use neutral density filters to attenuate the infrared beam. Set up the FTIR system as it will be used in the test measurements. Collect a CTS spectrum. Use a neutral density filter to attenuate the infrared beam (either immediately after the source or the interferometer) to approximately ½ its original intensity. Collect a second CTS spectrum. Use another filter to attenuate the infrared beam to approximately ¼ its original intensity. Collect a third background and CTS spectrum. Compare the CTS spectra. CTS band areas shall agree to within the uncertainty of the cylinder standard and the RMSD noise in the system.

8.3.3 Observe the single beam instrument response in a frequency region where the detector response is known to be zero. Verify that the detector response is ''flat'' and equal to zero in these regions.

8.4 *Data Storage Requirements.* All field test spectra shall be stored on a computer disk and a second backup copy must stored on a separate disk. The stored information includes sample interferograms, processed absorbance spectra, background interferograms, CTS sample interferograms and CTS absorbance spectra. Additionally, documentation of all sample conditions, instrument settings, and test records must be recorded on hard copy or on computer medium. Table 1 gives a sample presentation of documentation.

8.5 *Background Spectrum.* Evacuate the gas cell to ≤5 mmHg, and fill with dry nitrogen gas to ambient pressure (or purge the cell with 10 volumes of dry nitrogen). Verify that no significant amounts of absorbing species (for example water vapor and CO_2) are present. Collect a background spectrum, using a signal averaging period equal to or greater than the averaging period for the sample spectra. Assign a unique file name to the background spectrum. Store two copies of the background interferogram and processed single-beam spectrum on separate computer disks (one copy is the back-up).

8.5.1 *Interference Spectra.* If possible, collect spectra of known and suspected major interferences using the same optical system that will be used in the field measurements. This can be done on-site or earlier. A number of gases, e.g. CO_2, SO_2, CO, NH_3, are readily available from cylinder gas suppliers.

8.5.2 Water vapor spectra can be prepared by the following procedure. Fill a sample tube with distilled water. Evacuate above the sample and remove dissolved gasses by alternately freezing and thawing the water while evacuating. Allow water vapor into the FTIR cell, then dilute to atmospheric pressure with nitrogen or dry air. If quantitative water spectra are required, follow the reference spectrum procedure for neat samples (protocol, section 4.6). Often, interference spectra need not be quantitative, but for best results the absorbance must be comparable to the interference absorbance in the sample spectra.

8.6 Pre-Test Calibrations

8.6.1 *Calibration Transfer Standard.* Evacuate the gas cell to ≤5 mmHg absolute pressure, and fill the FTIR cell to atmospheric pressure with the CTS gas. Alternatively, purge the cell with 10 cell volumes of CTS gas. (If purge is used, verify that the CTS concentration in the cell is stable by collecting two spectra 2 minutes apart as the CTS gas continues to flow. If the absorbance in the second spectrum is no greater than in the first, within the uncertainty of the gas standard, then this can be used as the CTS spectrum.) Record the spectrum.

8.6.2 *QA Spike.* This procedure assumes that the method has been validated for at least some of the target analytes at the source. For emissions testing perform a QA spike. Use a certified standard, if possible, of an analyte, which has been validated at the source. One analyte standard can serve as a QA surrogate for other analytes which are less reactive or less soluble than the standard. Perform the spike procedure of section 9.2 of this method. Record spectra of at least three independent (section 3.22 of this method) spiked samples. Calculate the spiked component of the analyte concentration. If the average spiked concentration is within 0.7 to 1.3 times the expected concentration, then proceed with the testing. If applicable, apply the correction factor from the Method 301 of this appendix validation test (not the result from the QA spike).

8.7 *Sampling.* If analyte concentrations vary rapidly with time, continuous sampling is preferable using the smallest cell volume, fastest sampling rate and fastest spectra collection rate possible. Continuous sampling requires the least operator intervention even without an automated sampling system. For continuous monitoring at one location over long periods, Continuous sampling is preferred. Batch sampling and continuous static sampling are used for screening and performing test runs of finite duration. Either technique is preferred for sampling several locations in a matter of days. Batch sampling gives reasonably good time resolution and ensures that each spectrum measures a discreet (and unique) sample volume. Continuous static (and continuous) sampling provide a very stable background over long periods. Like batch sampling, continuous static

sampling also ensures that each spectrum measures a unique sample volume. It is essential that the leak check procedure under vacuum (section 8.2 of this method) is passed if the batch sampling procedure is used. It is essential that the leak check procedure under positive pressure is passed if the continuous static or continuous sampling procedures are used. The sampling techniques are described in sections 8.7.1 through 8.7.2 of this method.

8.7.1 *Batch Sampling*. Evacuate the absorbance cell to ≤5 mmHg absolute pressure. Fill the cell with exhaust gas to ambient pressure, isolate the cell, and record the spectrum. Before taking the next sample, evacuate the cell until no spectral evidence of sample absorption remains. Repeat this procedure to collect eight spectra of separate samples in 1 hour.

8.7.2 *Continuous Static Sampling*. Purge the FTIR cell with 10 cell volumes of sample gas. Isolate the cell, collect the spectrum of the static sample and record the pressure. Before measuring the next sample, purge the cell with 10 more cell volumes of sample gas.

8.8 Sampling QA and Reporting

8.8.1 Sample integration times shall be sufficient to achieve the required signal-to-noise ratio. Obtain an absorbance spectrum by filling the cell with N2. Measure the RMSD in each analytical region in this absorbance spectrum. Verify that the number of scans used is sufficient to achieve the target MAU.

8.8.2 Assign a unique file name to each spectrum.

8.8.3 Store two copies of sample interferograms and processed spectra on separate computer disks.

8.8.4 For each sample spectrum, document the sampling conditions, the sampling time (while the cell was being filled), the time the spectrum was recorded, the instrumental conditions (path length, temperature, pressure, resolution, signal integration time), and the spectral file name. Keep a hard copy of these data sheets.

8.9 *Signal Transmittance*. While sampling, monitor the signal transmittance. If signal transmittance (relative to the background) changes by 5 percent or more (absorbance = -.02 to .02) in any analytical spectral region, obtain a new background spectrum.

8.10 *Post-test CTS*. After the sampling run, record another CTS spectrum.

8.11 *Post-test QA*

8.11.1 Inspect the sample spectra immediately after the run to verify that the gas matrix composition was close to the expected (assumed) gas matrix.

8.11.2 Verify that the sampling and instrumental parameters were appropriate for the conditions encountered. For example, if the moisture is much greater than anticipated, it may be necessary to use a shorter path length or dilute the sample.

8.11.3 Compare the pre- and post-test CTS spectra. The peak absorbance in pre- and post-test CTS must be ±5 percent of the mean value. See appendix E of the FTIR Protocol.

9.0 Quality Control

Use analyte spiking (sections 8.6.2, 9.2 and 13.0 of this method) to verify that the sampling system can transport the analytes from the probe to the FTIR system.

9.1 *Spike Materials*. Use a certified standard (accurate to ±2 percent) of the target analyte, if one can be obtained. If a certified standard cannot be obtained, follow the procedures in section 4.6.2.2 of the FTIR Protocol.

9.2 *Spiking Procedure*. QA spiking (section 8.6.2 of this method) is a calibration procedure used before testing. QA spiking involves following the spike procedure of sections 9.2.1 through 9.2.3 of this method to obtain at least three spiked samples. The analyte concentrations in the spiked samples shall be compared to the expected spike concentration to verify that the sampling/analytical system is working properly. Usually, when QA spiking is used, the method has already been validated at a similar source for the analyte in question. The QA spike demonstrates that the validated sampling/analytical conditions are being duplicated. If the QA spike fails then the sampling/analytical system shall be repaired before testing proceeds. The method validation procedure (section 13.0 of this method) involves a more extensive use of the analyte spike procedure of sections 9.2.1 through 9.2.3 of this method. Spectra of at least 12 independent spiked and 12 independent unspiked samples are recorded. The concentration results are analyzed statistically to determine if there is a systematic bias in the method for measuring a particular analyte. If there is a systematic bias, within the limits allowed by Method 301 of this appendix, then a correction factor shall be applied to the analytical results. If the systematic bias is greater than the allowed limits, this method is not valid and cannot be used.

9.2.1 Introduce the spike/tracer gas at a constant flow rate of ≤10 percent of the total sample flow, when possible.

NOTE: Use the rotameter at the end of the sampling train to estimate the required spike/tracer gas flow rate.

Use a flow device, e.g., mass flow meter (# 2 percent), to monitor the spike flow rate. Record the spike flow rate every 10 minutes.

9.2.2 Determine the response time (RT) of the system by continuously collecting spectra of the spiked effluent until the spectrum of the spiked component is constant for 5 minutes. The RT is the interval from the

first measurement until the spike becomes constant. Wait for twice the duration of the RT, then collect spectra of two independent spiked gas samples. Duplicate analyses of the spiked concentration shall be within 5 percent of the mean of the two measurements.

9.2.3 Calculate the dilution ratio using the tracer gas as follows: where:

$$DF = \frac{SF_{6(spk)}}{SF_{6(dir)}} \qquad (3)$$

Where:

$$CS = DF*Spike_{dir} + Unspike\ (1 - DF) \qquad (4)$$

DF=Dilution factor of the spike gas; this value shall be ≥10.

$SF_{6(dir)}$=SF_6 (or tracer gas) concentration measured directly in undiluted spike gas.

$SF_{6(spk)}$=Diluted SF_6 (or tracer gas) concentration measured in a spiked sample.

$Spike^{dir}$=Concentration of the analyte in the spike standard measured by filling the FTIR cell directly.

CS=Expected concentration of the spiked samples.

Unspike=Native concentration of analytes in unspiked samples.

10.0 Calibration and Standardization

10.1 *Signal-to-Noise Ratio (S/N).* The RMSD in the noise must be less than one tenth of the minimum analyte peak absorbance in each analytical region. For example if the minimum peak absorbance is 0.01 at the required DL, then RMSD measured over the entire analytical region must be ≤0.001.

10.2 *Absorbance Path length.* Verify the absorbance path length by comparing reference CTS spectra to test CTS spectra. See appendix E of the FTIR Protocol.

10.3 *Instrument Resolution.* Measure the line width of appropriate test CTS band(s) to verify instrument resolution. Alternatively, compare CTS spectra to a reference CTS spectrum, if available, measured at the nominal resolution.

10.4 *Apodization Function.*In transforming the sample interferograms to absorbance spectra use the same apodization function that was used in transforming the reference spectra.

10.5 *FTIR Cell Volume.* Evacuate the cell to ≤5 mmHg. Measure the initial absolute temperature (T_i) and absolute pressure (P_i). Connect a wet test meter (or a calibrated dry gas meter), and slowly draw room air into the cell. Measure the meter volume (V_m), meter absolute temperature (T_m), and meter absolute pressure (P_m); and the cell final absolute temperature (T_f) and absolute pressure (P_f). Calculate the FTIR cell volume VSS, including that of the connecting tubing, as follows:

$$V_{SS} = \frac{V_m \frac{P_m}{T_m}}{\left[\frac{P_f}{T_f} - \frac{P_i}{T_i}\right]} \qquad (5)$$

11.0 Data Analysis and Calculations

Analyte concentrations shall be measured using reference spectra from the EPA FTIR spectral library. When EPA library spectra are not available, the procedures in section 4.6 of the Protocol shall be followed to prepare reference spectra of all the target analytes.

11.1 *Spectral De-resolution.* Reference spectra can be converted to lower resolution standard spectra (section 3.3 of this method) by truncating the original reference sample and background interferograms. Appendix K of the FTIR Protocol gives specific deresolution procedures. Deresolved spectra shall be transformed using the same apodization function and level of zero filling as the sample spectra. Additionally, pre-test FTIR protocol calculations (e.g., FRU, MAU, FCU) shall be performed using the de-resolved standard spectra.

11.2 *Data Analysis.* Various analytical programs are available for relating sample absorbance to a concentration standard. Calculated concentrations shall be verified by analyzing residual baselines after mathematically subtracting scaled reference spectra from the sample spectra. A full description of the data analysis and calculations is contained in the FTIR Protocol (sections 4.0, 5.0, 6.0 and appendices). Correct the calculated concentrations in the sample spectra for differences in absorption path length and temperature between the reference and sample spectra using equation 6,

$$C_{corr} = \left(\frac{L_r}{L_s}\right)\left(\frac{T_s}{T_r}\right)\left(\frac{P_r}{P_s}\right)C_{calc} \qquad (6)$$

Where:

C_{corr}=Concentration, corrected for path length.

C_{calc}=Concentration, initial calculation (output of the analytical program designed for the compound).
L_r=Reference spectra path length.
L_s=Sample spectra path length.
T_s=Absolute temperature of the sample gas, K.
T_r=Absolute gas temperature of reference spectra, K.
P_s=Sample cell pressure.
P_r=Reference spectrum sample pressure.

12.0 Method Performance

12.1 *Spectral Quality*. Refer to the FTIR Protocol appendices for analytical requirements, evaluation of data quality, and analysis of uncertainty.

12.2 *Sampling QA/QC*. The analyte spike procedure of section 9 of this method, the QA spike of section 8.6.2 of this method, and the validation procedure of section 13 of this method are used to evaluate the performance of the sampling system and to quantify sampling system effects, if any, on the measured concentrations. This method is self-validating provided that the results meet the performance requirement of the QA spike in sections 9.0 and 8.6.2 of this method and results from a previous method validation study support the use of this method in the application. Several factors can contribute to uncertainty in the measurement of spiked samples. Factors which can be controlled to provide better accuracy in the spiking procedure are listed in sections 12.2.1 through 12.2.4 of this method.

12.2.1 *Flow meter*. An accurate mass flow meter is accurate to ±1 percent of its span. If a flow of 1 L/min is monitored with such a MFM, which is calibrated in the range of 0–5 L/min, the flow measurement has an uncertainty of 5 percent. This may be improved by re-calibrating the meter at the specific flow rate to be used.

12.2.2 *Calibration gas*. Usually the calibration standard is certified to within ± 2 percent. With reactive analytes, such as HCl, the certified accuracy in a commercially available standard may be no better than ± 5 percent.

12.2.3 *Temperature*. Temperature measurements of the cell shall be quite accurate. If practical, it is preferable to measure sample temperature directly, by inserting a thermocouple into the cell chamber instead of monitoring the cell outer wall temperature.

12.2.4 *Pressure*. Accuracy depends on the accuracy of the barometer, but fluctuations in pressure throughout a day may be as much as 2.5 percent due to weather variations.

13.0 Method Validation Procedure

This validation procedure, which is based on EPA Method 301 (40 CFR part 63, appendix (A), may be used to validate this method for the analytes in a gas matrix. Validation at one source may also apply to another type of source, if it can be shown that the exhaust gas characteristics are similar at both sources.

13.1 Section 5.3 of Method 301 (40 CFR part 63, appendix A), the Analyte Spike procedure, is used with these modifications. The statistical analysis of the results follows section 6.3 of EPA Method 301. Section 3 of this method defines terms that are not defined in Method 301.

13.1.1 The analyte spike is performed dynamically. This means the spike flow is continuous and constant as spiked samples are measured.

13.1.2 The spike gas is introduced at the back of the sample probe.

13.1.3 Spiked effluent is carried through all sampling components downstream of the probe.

13.1.4 A single FTIR system (or more) may be used to collect and analyze spectra (not quadruplicate integrated sampling trains).

13.1.5 All of the validation measurements are performed sequentially in a single ''run'' (section 3.26 of this method).

13.1.6 The measurements analyzed statistically are each independent (section 3.22 of this method).

13.1.7 A validation data set can consist of more than 12 spiked and 12 unspiked measurements.

13.2 *Batch Sampling*. The procedure in sections 13.2.1 through 13.2.2 may be used for stable processes. If process emissions are highly variable, the procedure in section 13.2.3 shall be used.

13.2.1 With a single FTIR instrument and sampling system, begin by collecting spectra of two unspiked samples. Introduce the spike flow into the sampling system and allow 10 cell volumes to purge the sampling system and FTIR cell. Collect spectra of two spiked samples. Turn off the spike and allow 10 cell volumes of unspiked sample to purge the FTIR cell. Repeat this procedure until the 24 (or more) samples are collected.

13.2.2 In batch sampling, collect spectra of 24 distinct samples. (Each distinct sample consists of filling the cell to ambient pressure after the cell has been evacuated.)

13.2.3 Alternatively, a separate probe assembly, line, and sample pump can be used for spiked sample. Verify and document that sampling conditions are the same in both the spiked and the unspiked sampling systems. This can be done by wrapping both sample lines in the same heated bundle. Keep the same flow rate in both sample lines. Measure samples in sequence in pairs. After two spiked samples are measured, evacuate the FTIR cell, and turn the manifold valve so that spiked sample flows to the FTIR cell. Allow the connecting line from the manifold to the FTIR cell to purge thoroughly (the

time depends on the line length and flow rate). Collect a pair of spiked samples. Repeat the procedure until at least 24 measurements are completed.

13.3 Simultaneous Measurements With Two FTIR Systems. If unspiked effluent concentrations of the target analyte(s) vary significantly with time, it may be desirable to perform synchronized measurements of spiked and unspiked sample. Use two FTIR systems, each with its own cell and sampling system to perform simultaneous spiked and unspiked measurements. The optical configurations shall be similar, if possible. The sampling configurations shall be the same. One sampling system and FTIR analyzer shall be used to measure spiked effluent. The other sampling system and FTIR analyzer shall be used to measure unspiked flue gas. Both systems shall use the same sampling procedure (i.e., batch or continuous).

13.3.1 If batch sampling is used, synchronize the cell evacuation, cell filling, and collection of spectra. Fill both cells at the same rate (in cell volumes per unit time).

13.3.2 If continuous sampling is used, adjust the sample flow through each gas cell so that the same number of cell volumes pass through each cell in a given time (i.e. $TC_1 = TC_2$).

13.4 *Statistical Treatment.* The statistical procedure of EPA Method 301 of this appendix, section 6.3 is used to evaluate the bias and precision. For FTIR testing a validation ''run'' is defined as spectra of 24 independent samples, 12 of which are spiked with the analyte(s) and 12 of which are not spiked.

13.4.1 *Bias.* Determine the bias (defined by EPA Method 301 of this appendix, section 6.3.2) using equation 7:

$$B = S_m - CS \qquad (7)$$

Where:

B = Bias at spike level.

S_m = Mean concentration of the analyte spiked samples.

CS = Expected concentration of the spiked samples.

13.4.2 *Correction Factor.* Use section 6.3.2.2 of Method 301 of this appendix to evaluate the statistical significance of the bias. If it is determined that the bias is significant, then use section 6.3.3 of Method 301 to calculate a correction factor (CF). Analytical results of the test method are multiplied by the correction factor, if $0.7 \leq CF \leq 1.3$. If is determined that the bias is significant and CF $> \pm 30$ percent, then the test method is considered to ''not valid.''

13.4.3 If measurements do not pass validation, evaluate the sampling system, instrument configuration, and analytical system to determine if improper set-up or a malfunction was the cause. If so, repair the system and repeat the validation.

14.0 *Pollution Prevention.*

The extracted sample gas is vented outside the enclosure containing the FTIR system and gas manifold after the analysis. In typical method applications the vented sample volume is a small fraction of the source volumetric flow and its composition is identical to that emitted from the source. When analyte spiking is used, spiked pollutants are vented with the extracted sample gas. Approximately 1.6×10^{-4} to 3.2×10^{-4} lbs of a single HAP may be vented to the atmosphere in a typical validation run of 3 hours. (This assumes a molar mass of 50 to 100 g, spike rate of 1.0 L/min, and a standard concentration of 100 ppm). Minimize emissions by keeping the spike flow off when not in use.

15.0 *Waste Management.*

Small volumes of laboratory gas standards can be vented through a laboratory hood. Neat samples must be packed and disposed according to applicable regulations. Surplus materials may be returned to supplier for disposal.

16.0 *References.*

1. ''Field Validation Test Using Fourier Transform Infrared (FTIR) Spectrometry To Measure Formaldehyde, Phenol and Methanol at a Wool Fiberglass Production Facility.'' Draft. U.S. Environmental Protection Agency Report, EPA Contract No. 68D20163, Work Assignment I–32, September 1994.

2. ''FTIR Method Validation at a Coal-Fired Boiler''. Prepared for U.S. Environmental Protection Agency, Research Triangle Park, NC. Publication No.: EPA–454/R95–004, NTIS No.: PB95–193199. July, 1993.

3. ''Method 301—Field Validation of Pollutant Measurement Methods from Various Waste Media,'' 40 CFR part 63, appendix A.

4. ''Molecular Vibrations; The Theory of Infrared and Raman Vibrational Spectra,'' E. Bright Wilson, J.C. Decius, and P.C. Cross, Dover Publications, Inc., 1980. For a less intensive treatment of molecular rotational-vibrational spectra see, for example, ''Physical Chemistry,'' G.M. Barrow, chapters 12, 13, and 14, McGraw Hill, Inc., 1979.

5. ''Fourier Transform Infrared Spectrometry,'' Peter R. Griffiths and James de Haseth, Chemical Analysis, 83, 16–25,(1986), P.J. Elving, J.D. Winefordner and I.M. Kolthoff (ed.), John Wiley and Sons.

6. ''Computer-Assisted Quantitative Infrared Spectroscopy,'' Gregory L. McClure (ed.), ASTM Special Publication 934 (ASTM), 1987.

7. ''Multivariate Least-Squares Methods Applied to the Quantitative Spectral Analysis of Multicomponent Mixtures,'' Applied Spectroscopy, 39(10), 73–84, 1985.

TABLE 1.—EXAMPLE PRESENTATION OF SAMPLING DOCUMENTATION

Sample time	Spectrum file name	Background file name	Sample conditioning	Process condition

Sample time	Spectrum file	Interferogram	Resolution	Scans	Apodization	Gain	CTS Spectrum

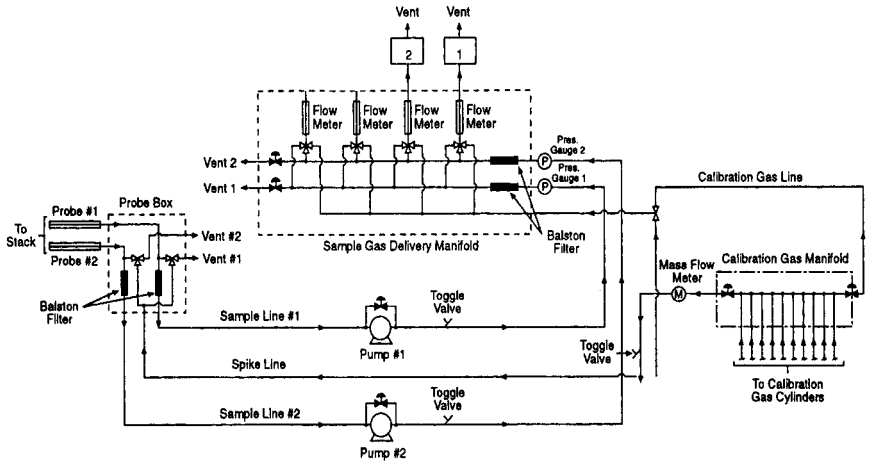

Figure 1. Extractive FTIR sampling system.

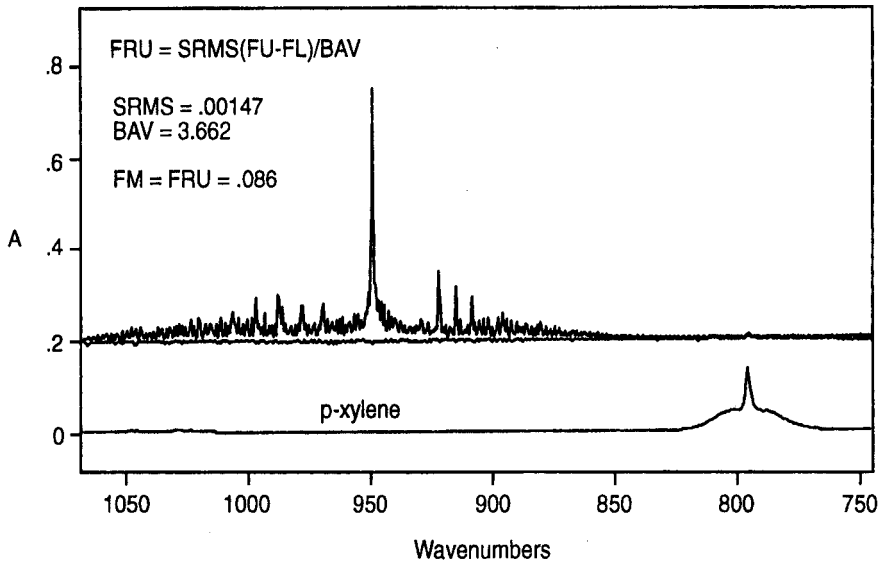

Figure 2. Fractional Reproducibility. Top: average of cts1031a and cts1101b. Bottom: Reference spectrum of p-xylene.

ADDENDUM TO TEST METHOD 320—PROTOCOL FOR THE USE OF EXTRACTIVE FOURIER TRANSFORM INFRARED (FTIR) SPECTROMETRY FOR THE ANALYSES OF GASEOUS EMISSIONS FROM STATIONARY SOURCES

1.0 Introduction

The purpose of this addendum is to set general guidelines for the use of modern FTIR spectroscopic methods for the analysis of gas samples extracted from the effluent of stationary emission sources. This addendum outlines techniques for developing and evaluating such methods and sets basic requirements for reporting and quality assurance procedures.

1.1 Nomenclature

1.1.1 Appendix A to this addendum lists definitions of the symbols and terms used in this Protocol, many of which have been taken directly from American Society for Testing and Materials (ASTM) publication E 131–90a, entitled ''Terminology Relating to Molecular Spectroscopy.''

1.1.2 Except in the case of background spectra or where otherwise noted, the term ''spectrum'' refers to a double-beam spectrum in units of absorbance vs. wavenumber (cm^{-1}).

1.1.3 The term ''Study'' in this addendum refers to a publication that has been subjected to EPA- or peer-review.

2.0 Applicability and Analytical Principle

2.1 *Applicability*. This Protocol applies to the determination of compound-specific concentrations in single- and multiple-component gas phase samples using double-beam absorption spectroscopy in the mid-infrared band. It does not specifically address other FTIR applications, such as single-beam spectroscopy, analysis of open-path (non-enclosed) samples, and continuous measurement techniques. If multiple spectrometers, absorption cells, or instrumental linewidths are used in such analyses, each distinct operational configuration of the system must be evaluated separately according to this Protocol.

2.2 Analytical Principle

2.2.1 In the mid-infrared band, most molecules exhibit characteristic gas phase absorption spectra that may be recorded by FTIR systems. Such systems consist of a source of mid-infrared radiation, an interferometer, an enclosed sample cell of known absorption pathlength, an infrared detector, optical elements for the transfer of infrared radiation between components, and gas flow control and measurement components. Adjunct and integral computer systems are used for controlling the instrument, processing the signal, and for performing both Fourier transforms and quantitative analyses of spectral data.

2.2.2 The absorption spectra of pure gases and of mixtures of gases are described by a linear absorbance theory referred to as Beer's Law. Using this law, modern FTIR systems use computerized analytical programs to quantify compounds by comparing the absorption spectra of known (reference) gas samples to the absorption spectrum of the sample gas. Some standard mathematical techniques used for comparisons are classical least squares, inverse least squares, cross-correlation, factor analysis, and partial least squares. Reference A describes several of these techniques, as well as additional techniques, such as differentiation methods, linear baseline corrections, and non-linear absorbance corrections.

3.0 General Principles of Protocol Requirements

The characteristics that distinguish FTIR systems from gas analyzers used in instrumental gas analysis methods (e.g., Methods 6C and 7E of appendix A to part 60 of this chapter) are: (1) Computers are necessary to obtain and analyze data; (2) chemical concentrations can be quantified using previously recorded infrared reference spectra; and (3) analytical assumptions and results, including possible effects of interfering compounds, can be evaluated after the quantitative analysis. The following general principles and requirements of this Protocol are based on these characteristics.

3.1 *Verifiability and Reproducibility of Results*. Store all data and document data analysis techniques sufficient to allow an independent agent to reproduce the analytical results from the raw interferometric data.

3.2 *Transfer of Reference Spectra*. To determine whether reference spectra recorded under one set of conditions (e.g., optical bench, instrumental linewidth, absorption pathlength, detector performance, pressure, and temperature) can be used to analyze sample spectra taken under a different set of conditions, quantitatively compare ''calibration transfer standards'' (CTS) and reference spectra as described in this Protocol.

NOTE: The CTS may, but need not, include analytes of interest). To effect this, record the absorption spectra of the CTS (a) immediately before and immediately after recording reference spectra and (b) immediately after recording sample spectra.

3.3 *Evaluation of FTIR Analyses*. The applicability, accuracy, and precision of FTIR measurements are influenced by a number of interrelated factors, which may be divided into two classes:

3.3.1 *Sample-Independent Factors*. Examples are system configuration and performance (e.g., detector sensitivity and infrared source output), quality and applicability of reference absorption spectra, and type of

mathematical analyses of the spectra. These factors define the fundamental limitations of FTIR measurements for a given system configuration. These limitations may be estimated from evaluations of the system before samples are available. For example, the detection limit for the absorbing compound under a given set of conditions may be estimated from the system noise level and the strength of a particular absorption band. Similarly, the accuracy of measurements may be estimated from the analysis of the reference spectra.

3.3.2 *Sample-Dependent Factors.* Examples are spectral interferants (e.g., water vapor and CO_2) or the overlap of spectral features of different compounds and contamination deposits on reflective surfaces or transmitting windows. To maximize the effectiveness of the mathematical techniques used in spectral analysis, identification of interferants (a standard initial step) and analysis of samples (includes effect of other analytical errors) are necessary. Thus, the Protocol requires post-analysis calculation of measurement concentration uncertainties for the detection of these potential sources of measurement error.

4.0 Pre-Test Preparations and Evaluations

Before testing, demonstrate the suitability of FTIR spectrometry for the desired application according to the procedures of this section.

4.1 *Identify Test Requirements.* Identify and record the test requirements described in sections 4.1.1 through 4.1.4 of this addendum. These values set the desired or required goals of the proposed analysis; the description of methods for determining whether these goals are actually met during the analysis comprises the majority of this Protocol.

4.1.1 Analytes (specific chemical species) of interest. Label the analytes from i = 1 to I.

4.1.2 Analytical uncertainty limit (AU_i). The AU_i is the maximum permissible fractional uncertainty of analysis for the ith analyte concentration, expressed as a fraction of the analyte concentration in the sample.

4.1.3 Required detection limit for each analyte (DL_i, ppm). The detection limit is the lowest concentration of an analyte for which its overall fractional uncertainty (OFU_i) is required to be less than its analytical uncertainty limit (AU_i).

4.1.4 Maximum expected concentration of each analyte ($CMAX_i$, ppm).

4.2 *Identify Potential Interferants.* Considering the chemistry of the process or results of previous studies, identify potential interferants, i.e., the major effluent constituents and any relatively minor effluent constituents that possess either strong absorption characteristics or strong structural similarities to any analyte of interest. Label them 1 through N_j, where the subscript ''j'' pertains to potential interferants. Estimate the concentrations of these compounds in the effluent ($CPOT_j$, ppm).

4.3 *Select and Evaluate the Sampling System.* Considering the source, e.g., temperature and pressure profiles, moisture content, analyte characteristics, and particulate concentration), select the equipment for extracting gas samples. Recommended are a particulate filter, heating system to maintain sample temperature above the dew point for all sample constituents at all points within the sampling system (including the filter), and sample conditioning system (e.g., coolers, water-permeable membranes that remove water or other compounds from the sample, and dilution devices) to remove spectral interferants or to protect the sampling and analytical components. Determine the minimum absolute sample system pressure (P_{min}, mmHg) and the infrared absorption cell volume (V_{SS}, liter). Select the techniques and/or equipment for the measurement of sample pressures and temperatures.

4.4 *Select Spectroscopic System.* Select a spectroscopic configuration for the application. Approximate the absorption pathlength (L_S', meter), sample pressure (P_S', kPa), absolute sample temperature T_S', and signal integration period (t_{SS}, seconds) for the analysis. Specify the nominal minimum instrumental linewidth (MIL) of the system. Verify that the fractional error at the approximate values P_S' and T_S' is less than one half the smallest value AU_i (see section 4.1.2 of this addendum).

4.5 Select Calibration Transfer Standards (CTS's). Select CTS's that meet the criteria listed in sections 4.5.1, 4.5.2, and 4.5.3 of this addendum.

NOTE: It may be necessary to choose preliminary analytical regions (see section 4.7 of this addendum), identify the minimum analyte linewidths, or estimate the system noise level (see section 4.12 of this addendum) before selecting the CTS. More than one compound may be needed to meet the criteria; if so, obtain separate cylinders for each compound.

4.5.1 The central wavenumber position of each analytical region shall lie within 25 percent of the wavenumber position of at least one CTS absorption band.

4.5.2 The absorption bands in section 4.5.1 of this addendum shall exhibit peak absorbances greater than ten times the value RMS_{EST} (see section 4.12 of this addendum) but less than 1.5 absorbance units.

4.5.3 At least one absorption CTS band within the operating range of the FTIR instrument shall have an instrument-independent linewidth no greater than the narrowest analyte absorption band. Perform and document measurements or cite Studies to determine analyte and CTS compound linewidths.

4.5.4 For each analytical region, specify the upper and lower wavenumber positions (FFU_m and FFL_m, respectively) that bracket the CTS absorption band or bands for the associated analytical region. Specify the wavenumber range, FNU to FNL, containing the absorption band that meets the criterion of section 4.5.3 of this addendum.

4.5.5 Associate, whenever possible, a single set of CTS gas cylinders with a set of reference spectra. Replacement CTS gas cylinders shall contain the same compounds at concentrations within 5 percent of that of the original CTS cylinders; the entire absorption spectra (not individual spectral segments) of the replacement gas shall be scaled by a factor between 0.95 and 1.05 to match the original CTS spectra.

4.6 Prepare Reference Spectra

NOTE: Reference spectra are available in a permanent soft copy from the EPA spectral library on the EMTIC (Emission Measurement Technical Information Center) computer bulletin board; they may be used if applicable.

4.6.1 Select the reference absorption pathlength (L_R) of the cell.

4.6.2 Obtain or prepare a set of chemical standards for each analyte, potential and known spectral interferants, and CTS. Select the concentrations of the chemical standards to correspond to the top of the desired range.

4.6.2.1 *Commercially-Prepared Chemical Standards*. Chemical standards for many compounds may be obtained from independent sources, such as a specialty gas manufacturer, chemical company, or commercial laboratory. These standards (accurate to within ±2 percent) shall be prepared according to EPA Traceability Protocol (see Reference D) or shall be traceable to NIST standards. Obtain from the supplier an estimate of the stability of the analyte concentration. Obtain and follow all of the supplier's recommendations for recertifying the analyte concentration.

4.6.2.2 *Self-Prepared Chemical Standards*. Chemical standards may be prepared by diluting certified commercially prepared chemical gases or pure analytes with ultrapure carrier (UPC) grade nitrogen according to the barometric and volumetric techniques generally described in Reference A, section A4.6.

4.6.3 Record a set of the absorption spectra of the CTS {R1□, then a set of the reference spectra at two or more concentrations in duplicate over the desired range (the top of the range must be less than 10 times that of the bottom), followed by a second set of CTS spectra {R2□⇆ (If self-prepared standards are used, see section 4.6.5 of this addendum before disposing of any of the standards.) The maximum accepted standard concentration-pathlength product (ASCPP) for each compound shall be higher than the maximum estimated concentration-pathlength products for both analytes and known interferants in the effluent gas. For each analyte, the minimum ASCPP shall be no greater than ten times the concentration-pathlength product of that analyte at its required detection limit.

4.6.4 Permanently store the background and interferograms in digitized form. Document details of the mathematical process for generating the spectra from these interferograms. Record the sample pressure (P_R), sample temperature (T_R), reference absorption pathlength (L_R), and interferogram signal integration period (t_{SR}). Signal integration periods for the background interferograms shall be $\geq t_{SR.}$ Values of P_R, L_R, and t_{SR} shall not deviate by more than ±1 percent from the time of recording [R1] to that of recording [R2].

4.6.5 If self-prepared chemical standards are employed and spectra of only two concentrations are recorded for one or more compounds, verify the accuracy of the dilution technique by analyzing the prepared standards for those compounds with a secondary (non-FTIR) technique in accordance with sections 4.6.5.1 through 4.6.5.4 of this addendum.

4.6.5.1 Record the response of the secondary technique to each of the four standards prepared.

4.6.5.2 Perform a linear regression of the response values (dependant variable) versus the accepted standard concentration (ASC) values (independent variable), with the regression constrained to pass through the zero-response, zero ASC point.

4.6.5.3 Calculate the average fractional difference between the actual response values and the regression-predicted values (those calculated from the regression line using the four ASC values as the independent variable).

4.6.5.4 If the average fractional difference value calculated in section 4.6.5.3 of this addendum is larger for any compound than the corresponding AU_i, the dilution technique is not sufficiently accurate and the reference spectra prepared are not valid for the analysis.

4.7 *Select Analytical Regions*. Using the general considerations in section 7 of Reference A and the spectral characteristics of the analytes and interferants, select the analytical regions for the application. Label them m = 1 to M. Specify the lower, center and upper wavenumber positions of each analytical region (FL_m, FC_m, and FU_m, respectively). Specify the analytes and interferants which exhibit absorption in each region.

4.8 *Determine Fractional Reproducibility Uncertainties*. Using appendix E of this addendum, calculate the fractional reproducibility uncertainty for each analyte (FRU_i) from a comparison of [R1] and [R2]. If $FRU_i > AU_i$

for any analyte, the reference spectra generated in accordance with section 4.6 of this addendum are not valid for the application.

4.9 *Identify Known Interferants.* Using appendix B of this addendum, determine which potential interferants affect the analyte concentration determinations. Relabel these potential interferant as ''known'' interferants, and designate these compounds from k = 1 to K. Appendix B to this addendum also provides criteria for determining whether the selected analytical regions are suitable.

4.10 Prepare Computerized Analytical Programs

4.10.1 Choose or devise mathematical techniques (e.g, classical least squares, inverse least squares, cross-correlation, and factor analysis) based on equation 4 of Reference A that are appropriate for analyzing spectral data by comparison with reference spectra.

4.10.2 Following the general recommendations of Reference A, prepare a computer program or set of programs that analyzes all of the analytes and known interferants, based on the selected analytical regions (section 4.7 of this addendum) and the prepared reference spectra (section 4.6 of this addendum). Specify the baseline correction technique (e.g., determining the slope and intercept of a linear baseline contribution in each analytical region) for each analytical region, including all relevant wavenumber positions.

4.10.3 Use programs that provide as output [at the reference absorption pathlength (L_R), reference gas temperature (T_R), and reference gas pressure (P_R)] the analyte concentrations, the known interferant concentrations, and the baseline slope and intercept values. If the sample absorption pathlength (L_S), sample gas temperature (T_S), or sample gas pressure (P_S) during the actual sample analyses differ from L_R, T_R, and P_R, use a program or set of programs that applies multiplicative corrections to the derived concentrations to account for these variations, and that provides as output both the corrected and uncorrected values. Include in the report of the analysis (see section 7.0 of this addendum) the details of any transformations applied to the original reference spectra (e.g., differentiation), in such a fashion that all analytical results may be verified by an independent agent from the reference spectra and data spectra alone.

4.11 *Determine the Fractional Calibration Uncertainty.* Calculate the fractional calibration uncertainty for each analyte (FCUi) according to appendix F of this addendum, and compare these values to the fractional uncertainty limits (AU_i; see section 4.1.2 of this addendum). If $FCU_i > AU_i$, either the reference spectra or analytical programs for that analyte are unsuitable.

4.12 *Verify System Configuration Suitability.* Using appendix C of this addendum, measure or obtain estimates of the noise level (RMS_{EST}, absorbance) of the FTIR system. Alternatively, construct the complete spectrometer system and determine the values RMS_{Sm} using appendix G of this addendum. Estimate the minimum measurement uncertainty for each analyte (MAU_i, ppm) and known interferant (MIU_k, ppm) using appendix D of this addendum. Verify that (a) $MAU_i < (AU_i)(DL_i)$, $FRUi < AU_i$, and $FCUi < AU_i$ for each analyte and that (b) the CTS chosen meets the requirements listed in sections 4.5.1 through 4.5.5 of this addendum.

5.0 Sampling and Analysis Procedure

5.1 *Analysis System Assembly and Leak-Test.* Assemble the analysis system. Allow sufficient time for all system components to reach the desired temperature. Then, determine the leak-rate (L_R) and leak volume (V_L), where $V_L=L_R\ t_{SS}$. Leak volumes shall be ≤4 percent of V_{SS}.

5.2 *Verify Instrumental Performance.* Measure the noise level of the system in each analytical region using the procedure of appendix G of this addendum. If any noise level is higher than that estimated for the system in section 4.12 of this addendum, repeat the calculations of appendix D of this addendum and verify that the requirements of section 4.12 of this addendum are met; if they are not, adjust or repair the instrument and repeat this section.

5.3 Determine the Sample Absorption Pathlength

Record a background spectrum. Then, fill the absorption cell with CTS at the pressure P_R and record a set of CTS spectra [R3]. Store the background and unscaled CTS single beam interferograms and spectra. Using appendix H of this addendum, calculate the sample absorption pathlength (L_S) for each analytical region. The values L_S shall not differ from the approximated sample pathlength L_S' (see section 4.4 of this addendum) by more than 5 percent.

5.4 *Record Sample Spectrum.* Connect the sample line to the source. Either evacuate the absorption cell to an absolute pressure below 5 mmHg before extracting a sample from the effluent stream into the absorption cell, or pump at least ten cell volumes of sample through the cell before obtaining a sample. Record the sample pressure P_S. Generate the absorbance spectrum of the sample. Store the background and sample single beam interferograms, and document the process by which the absorbance spectra are generated from these data. (If necessary, apply the spectral transformations developed in section 5.6.2 of this addendum). The resulting sample spectrum is referred to below as S_S.

NOTE: Multiple sample spectra may be recorded according to the procedures of section

5.4 of this addendum before performing sections 5.5 and 5.6 of this addendum.

5.5 *Quantify Analyte Concentrations.* Calculate the unscaled analyte concentrations RUA_i and unscaled interferant concentrations RUI_K using the programs developed in section 4 of this addendum. To correct for pathlength and pressure variations between the reference and sample spectra, calculate the scaling factor, R_{LPS} using equation A.1,

$$R_{LPS} = \left(L_R P_R T_S\right) / \left(L_S P_S T_R\right) \quad (A.1)$$

Calculate the final analyte and interferant concentrations RSA_i and RSI_k using equations A.2 and A.3,

$$RSA_i = R_{LPS} RUA_i \quad (A.2)$$

$$RSI_k = R_{LPS} RUI_k \quad (A.3)$$

5.6 *Determine Fractional Analysis Uncertainty.* Fill the absorption cell with CTS at the pressure P_S. Record a set of CTS spectra [R4]. Store the background and CTS single beam interferograms. Using appendix H of this addendum, calculate the fractional analysis uncertainty (FAU) for each analytical region. If the FAU indicated for any analytical region is greater than the required accuracy requirements determined in sections 4.1.1 through 4.1.4 of this addendum, then comparisons to previously recorded reference spectra are invalid in that analytical region, and the analyst shall perform one or both of the procedures of sections 5.6.1 through 5.6.2 of this addendum.

5.6.1 Perform instrumental checks and adjust the instrument to restore its performance to acceptable levels. If adjustments are made, repeat sections 5.3, 5.4 (except for the recording of a sample spectrum), and 5.5 of this addendum to demonstrate that acceptable uncertainties are obtained in all analytical regions.

5.6.2 Apply appropriate mathematical transformations (e.g., frequency shifting, zero-filling, apodization, smoothing) to the spectra (or to the interferograms upon which the spectra are based) generated during the performance of the procedures of section 5.3 of this addendum. Document these transformations and their reproducibility. Do not apply multiplicative scaling of the spectra, or any set of transformations that is mathematically equivalent to multiplicative scaling. Different transformations may be applied to different analytical regions. Frequency shifts shall be less than one-half the minimum instrumental linewidth, and must be applied to all spectral data points in an analytical region. The mathematical transformations may be retained for the analysis if they are also applied to the appropriate analytical regions of all sample spectra recorded, and if all original sample spectra are digitally stored. Repeat sections 5.3, 5.4 (except the recording of a sample spectrum), and 5.5 of this addendum to demonstrate that these transformations lead to acceptable calculated concentration uncertainties in all analytical regions.

6.0 Post-Analysis Evaluations

Estimate the overall accuracy of the analyses performed in accordance with sections 5.1 through 5.6 of this addendum using the procedures of sections 6.1 through 6.3 of this addendum.

6.1 *Qualitatively Confirm the Assumed Matrix.* Examine each analytical region of the sample spectrum for spectral evidence of unexpected or unidentified interferants. If found, identify the interfering compounds (see Reference C for guidance) and add them to the list of known interferants. Repeat the procedures of section 4 of this addendum to include the interferants in the uncertainty calculations and analysis procedures. Verify that the MAU and FCU values do not increase beyond acceptable levels for the application requirements. Re-calculate the analyte concentrations (section 5.5 of this addendum) in the affected analytical regions.

6.2 *Quantitatively Evaluate Fractional Model Uncertainty (FMU).* Perform the procedures of either section 6.2.1 or 6.2.2 of this addendum:

6.2.1 Using appendix I of this addendum, determine the fractional model error (FMU) for each analyte.

6.2.2 Provide statistically determined uncertainties FMU for each analyte which are equivalent to two standard deviations at the 95 percent confidence level. Such determinations, if employed, must be based on mathematical examinations of the pertinent sample spectra (not the reference spectra alone). Include in the report of the analysis (see section 7.0 of this addendum) a complete description of the determination of the concentration uncertainties.

6.3 *Estimate Overall Concentration Uncertainty (OCU).* Using appendix J of this addendum, determine the overall concentration uncertainty (OCU) for each analyte. If the OCU is larger than the required accuracy for any analyte, repeat sections 4 and 6 of this addendum.

7.0 *Reporting Requirements*

[Documentation pertaining to virtually all the procedures of sections 4, 5, and 6 will be required. Software copies of reference spectra and sample spectra will be retained for some minimum time following the actual testing.]

8.0 References

(A) Standard Practices for General Techniques of Infrared Quantitative Analysis

(American Society for Testing and Materials, Designation E 168–88).

(B) The Coblentz Society Specifications for Evaluation of Research Quality Analytical Infrared Reference Spectra (Class II); Anal. Chemistry 47, 945A (1975); Appl. Spectroscopy 444, pp. 211–215, 1990.

(C) Standard Practices for General Techniques for Qualitative Infrared Analysis, American Society for Testing and Materials, Designation E 1252–88.

(D) ''EPA Traceability Protocol for Assay and Certification of Gaseous Calibration Standards,'' U.S. Environmental Protection Agency Publication No. EPA/600/R–93/224, December 1993.

APPENDIX A TO ADDENDUM TO METHOD 320—DEFINITIONS OF TERMS AND SYMBOLS

A.1 *Definitions of Terms.* All terms used in this method that are not defined below have the meaning given to them in the CAA and in subpart A of this part.

Absorption band means a contiguous wavenumber region of a spectrum (equivalently, a contiguous set of absorbance spectrum data points) in which the absorbance passes through a maximum or a series of maxima.

Absorption pathlength means the distance in a spectrophotometer, measured in the direction of propagation of the beam of radiant energy, between the surface of the specimen on which the radiant energy is incident and the surface of the specimen from which it is emergent.

Analytical region means a contiguous wavenumber region (equivalently, a contiguous set of absorbance spectrum data points) used in the quantitative analysis for one or more analytes.

NOTE: The quantitative result for a single analyte may be based on data from more than one analytical region.

Apodization means modification of the ILS function by multiplying the interferogram by a weighing function whose magnitude varies with retardation.

Background spectrum means the single beam spectrum obtained with all system components without sample present.

Baseline means any line drawn on an absorption spectrum to establish a reference point that represents a function of the radiant power incident on a sample at a given wavelength.

Beers's law means the direct proportionality of the absorbance of a compound in a homogeneous sample to its concentration.

Calibration transfer standard (CTS) gas means a gas standard of a compound used to achieve and/or demonstrate suitable quantitative agreement between sample spectra and the reference spectra; see section 4.5.1 of this addendum.

Compound means a substance possessing a distinct, unique molecular structure.

Concentration (c) means the quantity of a compound contained in a unit quantity of sample. The unit ''ppm'' (number, or mole, basis) is recommended.

Concentration-pathlength product means the mathematical product of concentration of the species and absorption pathlength. For reference spectra, this is a known quantity; for sample spectra, it is the quantity directly determined from Beer's law. The units ''centimeters-ppm'' or ''meters-ppm'' are recommended.

Derivative absorption spectrum means a plot of rate of change of absorbance or of any function of absorbance with respect to wavelength or any function of wavelength.

Double beam spectrum means a transmission or absorbance spectrum derived by dividing the sample single beam spectrum by the background spectrum.

NOTE: The term ''double-beam'' is used elsewhere to denote a spectrum in which the sample and background interferograms are collected simultaneously along physically distinct absorption paths. Here, the term denotes a spectrum in which the sample and background interferograms are collected at different times along the same absorption path.

Fast Fourier transform (FFT) means a method of speeding up the computation of a discrete FT by factoring the data into sparse matrices containing mostly zeros.

Flyback means interferometer motion during which no data are recorded.

Fourier transform (FT) means the mathematical process for converting an amplitude-time spectrum to an amplitude-frequency spectrum, or vice versa.

Fourier transform infrared (FTIR) spectrometer means an analytical system that employs a source of mid-infrared radiation, an interferometer, an enclosed sample cell of known absorption pathlength, an infrared detector, optical elements that transfer infrared radiation between components, and a computer system. The time-domain detector response (interferogram) is processed by a Fourier transform to yield a representation of the detector response vs. infrared frequency.

NOTE: When FTIR spectrometers are interfaced with other instruments, a slash should be used to denote the interface; e.g., GC/FTIR; HPCL/FTIR, and the use of FTIR should be explicit; i.e., FTIR not IR.

Frequency, v means the number of cycles per unit time.

Infrared means the portion of the electromagnetic spectrum containing wavelengths from approximately 0.78 to 800 microns.

Interferogram, I(σ) means record of the modulated component of the interference

signal measured as a function of retardation by the detector.

Interferometer means device that divides a beam of radiant energy into two or more paths, generates an optical path difference between the beams, and recombines them in order to produce repetitive interference maxima and minima as the optical retardation is varied.

Linewidth means the full width at half maximum of an absorption band in units of wavenumbers (cm^{-1}).

Mid-infrared means the region of the electromagnetic spectrum from approximately 400 to 5000 cm^{-1}.

Reference spectra means absorption spectra of gases with known chemical compositions, recorded at a known absorption pathlength, which are used in the quantitative analysis of gas samples.

Retardation, σ means optical path difference between two beams in an interferometer; also known as ''optical path difference'' or ''optical retardation.''

Scan means digital representation of the detector output obtained during one complete motion of the interferometer's moving assembly or assemblies.

Scaling means application of a multiplicative factor to the absorbance values in a spectrum.

Single beam spectrum means Fourier-transformed interferogram, representing the detector response vs. wavenumber.

NOTE: The term ''single-beam'' is used elsewhere to denote any spectrum in which the sample and background interferograms are recorded on the same physical absorption path; such usage differentiates such spectra from those generated using interferograms recorded along two physically distinct absorption paths (see ''double-beam spectrum'' above). Here, the term applies (for example) to the two spectra used directly in the calculation of transmission and absorbance spectra of a sample.

Standard reference material means a reference material, the composition or properties of which are certified by a recognized standardizing agency or group.

NOTE: The equivalent ISO term is ''certified reference material.''

Transmittance, T means the ratio of radiant power transmitted by the sample to the radiant power incident on the sample. Estimated in FTIR spectroscopy by forming the ratio of the single-beam sample and background spectra.

Wavenumber, $\bar{v}$ means the number of waves per unit length.

NOTE: The usual unit of wavenumber is the reciprocal centimeter, cm^{-1}. The wavenumber is the reciprocal of the wavelength, λ, when λ is expressed in centimeters.

Zero-filling means the addition of zero-valued points to the end of a measured interferogram.

NOTE: Performing the FT of a zero-filled interferogram results in correctly interpolated points in the computed spectrum.

A.2 *Definitions of Mathematical Symbols.* The symbols used in equations in this protocol are defined as follows:

(1) A, absorbance = the logarithm to the base 10 of the reciprocal of the transmittance (T).

$$A = \log_{10}\left(\frac{1}{T}\right) = -\log_{10} T$$

(2) AAI_{im} = band area of the ith analyte in the mth analytical region, at the concentration (CL_i) corresponding to the product of its required detection limit (DL_i) and analytical uncertainty limit (AU_i) .

(3) AAV_{im} = average absorbance of the ith analyte in the mth analytical region, at the concentration (CL_i) corresponding to the product of its required detection limit (DL_i) and analytical uncertainty limit (AU_i).

(4) ASC, accepted standard concentration = the concentration value assigned to a chemical standard.

(5) ASCPP, accepted standard concentration-pathlength product = for a chemical standard, the product of the ASC and the sample absorption pathlength. The units ''centimeters-ppm'' or ''meters-ppm'' are recommended.

(6) AU_i, analytical uncertainty limit = the maximum permissible fractional uncertainty of analysis for the ith analyte concentration, expressed as a fraction of the analyte concentration determined in the analysis.

(7) AVT_m = average estimated total absorbance in the mth analytical region.

(8) $CKWN_k$ = estimated concentration of the kth known interferant.

(9) $CMAX_i$ = estimated maximum concentration of the ith analyte.

(10) $CPOT_j$ = estimated concentration of the jth potential interferant.

(11) DL_i, required detection limit = for the ith analyte, the lowest concentration of the analyte for which its overall fractional uncertainty (OFU_i) is required to be less than the analytical uncertainty limit (AU_i).

(12) FC_m = center wavenumber position of the mth analytical region.

(13) FAU_i, fractional analytical uncertainty = calculated uncertainty in the measured concentration of the ith analyte because of errors in the mathematical comparison of reference and sample spectra.

(14) FCU_i, fractional calibration uncertainty = calculated uncertainty in the measured concentration of the ith analyte because of errors in Beer's law modeling of the reference spectra concentrations.

(15) FFL_m = lower wavenumber position of the CTS absorption band associated with the mth analytical region.

(16) FFU_m = upper wavenumber position of the CTS absorption band associated with the mth analytical region.

(17) FL_m = lower wavenumber position of the mth analytical region.

(18) FMU_i, fractional model uncertainty = calculated uncertainty in the measured concentration of the ith analyte because of errors in the absorption model employed.

(19) FN_L = lower wavenumber position of the CTS spectrum containing an absorption band at least as narrow as the analyte absorption bands.

(20) FN_U = upper wavenumber position of the CTS spectrum containing an absorption band at least as narrow as the analyte absorption bands.

(21) FRU_i, fractional reproducibility uncertainty = calculated uncertainty in the measured concentration of the ith analyte because of errors in the reproducibility of spectra from the FTIR system.

(22) FU_m = upper wavenumber position of the mth analytical region.

(23) IAI_{jm} = band area of the jth potential interferant in the mth analytical region, at its expected concentration ($CPOT_j$).

(24) IAV_{im} = average absorbance of the ith analyte in the mth analytical region, at its expected concentration ($CPOT_j$).

(25) $ISC_{i\ or\ k}$, indicated standard concentration = the concentration from the computerized analytical program for a single-compound reference spectrum for the ith analyte or k^{th} known interferant.

(26) kPa = kilo-Pascal (see Pascal).

(27) L_S' = estimated sample absorption pathlength.

(28) L_R = reference absorption pathlength.

(29) L_S = actual sample absorption pathlength.

(30) MAU_i = mean of the MAU_{im} over the appropriate analytical regions.

(31) MAU_{im}, minimum analyte uncertainty = the calculated minimum concentration for which the analytical uncertainty limit (AU_i) in the measurement of the ith analyte, based on spectral data in the mth analytical region, can be maintained.

(32) MIU_j = mean of the MIU_{jm} over the appropriate analytical regions.

(33) MIU_{jm}, minimum interferant uncertainty = the calculated minimum concentration for which the analytical uncertainty limit $CPOT_j/20$ in the measurement of the jth interferant, based on spectral data in the mth analytical region, can be maintained.

(34) MIL, minimum instrumental linewidth = the minimum linewidth from the FTIR system, in wavenumbers.

NOTE: The MIL of a system may be determined by observing an absorption band known (through higher resolution examinations) to be narrower than indicated by the system. The MIL is fundamentally limited by the retardation of the interferometer, but is also affected by other operational parameters (e.g., the choice of apodization).

(35) N_i = number of analytes.

(36) N_j = number of potential interferants.

(37) N_k = number of known interferants.

(38) N_{scan} = the number of scans averaged to obtain an interferogram.

(39) OFU_i = the overall fractional uncertainty in an analyte concentration determined in the analysis (OFU_i = MAX[FRU_i, FCU_i, FAU_i, FMU_i]).

(40) Pascal (Pa) = metric unit of static pressure, equal to one Newton per square meter; one atmosphere is equal to 101,325 Pa; 1/760 atmosphere (one Torr, or one millimeter Hg) is equal to 133.322 Pa.

(41) P_{min} = minimum pressure of the sampling system during the sampling procedure.

(42) P_S' = estimated sample pressure.

(43) P_R = reference pressure.

(44) P_S = actual sample pressure.

(45) RMS_{Sm} = measured noise level of the FTIR system in the mth analytical region.

(46) RMSD, root mean square difference = a measure of accuracy determined by the following equation:

$$RMSD = \sqrt{\left(\frac{1}{n}\right)\sum_{i=1}^{n} e_i^2}$$

Where:

n = the number of observations for which the accuracy is determined.

e_i = the difference between a measured value of a property and its mean value over the n observations.

NOTE: The RMSD value ''between a set of n contiguous absorbance values (A_i) and the mean of the values'' (A_M) is defined as

$$RMSD = \sqrt{\left(\frac{1}{n}\right)\sum_{i-1}^{n}\left(A_i - A_M\right)^2}$$

(47) RSA_i = the (calculated) final concentration of the ith analyte.

(48) RSI_k = the (calculated) final concentration of the kth known interferant.

(49) t_{scan}, scan time = time used to acquire a single scan, not including flyback.

(50) t_S, signal integration period = the period of time over which an interferogram is averaged by addition and scaling of individual scans. In terms of the number of scans N_{scan} and scan time t_{scan}, $t_S = N_{scan}t_{scan}$.

(51) t_{SR} = signal integration period used in recording reference spectra.

(52) t_{SS} = signal integration period used in recording sample spectra.

(53) T_R = absolute temperature of gases used in recording reference spectra.

(54) T_S = absolute temperature of sample gas as sample spectra are recorded.

(55) TP, Throughput = manufacturer's estimate of the fraction of the total infrared power transmitted by the absorption cell and transfer optics from the interferometer to the detector.

(56) V_{SS} = volume of the infrared absorption cell, including parts of attached tubing.

(57) W_{ik} = weight used to average over analytical regions k for quantities related to the analyte i; see appendix D of this addendum.

APPENDIX B TO ADDENDUM TO METHOD 320—IDENTIFYING SPECTRAL INTERFERANTS

B.1 General

B.1.1 Assume a fixed absorption pathlength equal to the value L_S'.

B.1.2 Use band area calculations to compare the relative absorption strengths of the analytes and potential interferants. In the mth analytical region (FL_m to FU_m), use either rectangular or trapezoidal approximations to determine the band areas described below (see Reference A, sections A.3.1 through A.3.3). Document any baseline corrections applied to the spectra.

B.1.3 Use the average total absorbance of the analytes and potential interferants in each analytical region to determine whether the analytical region is suitable for analyte concentration determinations.

NOTE: The average absorbance in an analytical region is the band area divided by the width of the analytical region in wavenumbers. The average total absorbance in an analytical region is the sum of the average absorbances of all analytes and potential interferants.

B.2 Calculations

B.2.1 Prepare spectral representations of each analyte at the concentration $CL_i = (DL_i)(AU_i)$, where DL_i is the required detection limit and AU_i is the maximum permissible analytical uncertainty. For the mth analytical region, calculate the band area (AAI_{im}) and average absorbance (AAV_{im}) from these scaled analyte spectra.

B.2.2 Prepare spectral representations of each potential interferant at its expected concentration ($CPOT_j$). For the mth analytical region, calculate the band area (IAI_{jm}) and average absorbance (IAV_{jm}) from these scaled potential interferant spectra.

B.2.3 Repeat the calculation for each analytical region, and record the band area results in matrix form as indicated in Figure B.1.

B.2.4 If the band area of any potential interferant in an analytical region is greater than the one-half the band area of any analyte (i.e., $IAI_{jm} > 0.5\ AAI_{im}$ for any pair ij and any m), classify the potential interferant as a known interferant. Label the known interferants k = 1 to K. Record the results in matrix form as indicated in Figure B.2.

B.2.5 Calculate the average total absorbance (AVT_m) for each analytical region and record the values in the last row of the matrix described in Figure B.2. Any analytical region where $AVT_m > 2.0$ is unsuitable.

FIGURE B.1 Presentation of Potential Interferant Calculations.

	Analytical Regions 1 . . . . . M
Analyte Labels	
1	AAI_{11} . . . AAI_{1M}
.	. .
.	. .
I	AAI_{I1} . . . AAI_{IM}
Potential Interferant Labels	
1	IAI_{11} . . . IAI_{1M}
.	. .
.	. .
J	IAI_{J1} . . . IAI_{JM}

FIGURE B.2 Presentation of Known Interferant Calculations

	Analytical Regions 1 . . . . . M
Analyte Labels	
1	AAI_{11} . . . . . AAI_{1M}
.	. .
.	. .
I	AAI_{I1} . . . . . AAI_{IM}
Known Interferant Labels	
1	IAI_{11} . . . . . IAI_{1M}
.	. .
.	. .
K	IAI_{K1} . . . . . IAI_{KM}
Total Average Absorbance	AVT_1 AVT_M

APPENDIX C TO ADDENDUM TO METHOD 320—ESTIMATING NOISE LEVELS

C.1 General

C.1.1 The root-mean-square (RMS) noise level is the standard measure of noise in this addendum. The RMS noise level of a contiguous segment of a spectrum is defined as the RMS difference (RMSD) between the absorbance values which form the segment and the mean value of that segment (see appendix A of this addendum).

C.1.2 The RMS noise value in double-beam absorbance spectra is assumed to be inversely proportional to: (a) the square root of the signal integration period of the sample single beam spectra from which it is formed, and (b) the total infrared power transmitted

through the interferometer and absorption cell.

C.1.3 Practically, the assumption of C.1.2 allows the RMS noise level of a complete system to be estimated from the quantities described in sections C.1.3.1 through C.1.3.4:

C.1.3.1 RMS_{MAN}, the noise level of the system (in absorbance units), without the absorption cell and transfer optics, *under those conditions necessary to yield the specified minimum instrumental linewidth*, e.g., Jacquinot stop size.

C.1.3.2 t_{MAN}, the manufacturer's signal integration time used to determine RMS_{MAN}.

C.1.3.3 t_{SS}, the signal integration time for the analyses.

C.1.3.4 TP, the manufacturer's estimate of the fraction of the total infrared power transmitted by the absorption cell and transfer optics from the interferometer to the detector.

C.2 Calculations

C.2.1 Obtain the values of RMS_{MAN}, t_{MAN}, and TP from the manufacturers of the equipment, or determine the noise level by direct measurements with the completely constructed system proposed in section 4 of this addendum.

C.2.2 Calculate the noise value of the system (RMS_{EST}) using equation C.1.

$$RMS_{EST} = RMS_{MAN} \quad TP\sqrt{\frac{t_{ss}}{t_{MAN}}} \qquad (C.1)$$

APPENDIX D TO ADDENDUM TO METHOD 320—ESTIMATING MINIMUM CONCENTRATION MEASUREMENT UNCERTAINTIES (MAU AND MIU)

D.1 General

Estimate the minimum concentration measurement uncertainties for the ith analyte (MAU_i) and j^{th} interferant (MIU_j) based on the spectral data in the mth analytical region by comparing the analyte band area in the analytical region (AAI_{im}) and estimating or measuring the noise level of the system (RMS_{EST} or RMS_{SM}).

NOTE: For a single analytical region, the MAU or MIU value is the concentration of the analyte or interferant for which the band area is equal to the product of the analytical region width (in wavenumbers) and the noise level of the system (in absorbance units). If data from more than one analytical region are used in the determination of an analyte concentration, the MAU or MIU is the mean of the separate MAU or MIU values calculated for each analytical region.

D.2 Calculations

D.2.1 For each analytical region, set RMS = RMS_{SM} if measured (appendix G of this addendum), or set RMS = RMS_{EST} if estimated (appendix C of this addendum).

D.2.2 For each analyte associated with the analytical region, calculate MAU_{im} using equation D.1,

$$MAU_{im} = (RMS)\left(DL_i\right)\left(AU_i\right)\frac{\left(FU_m - FL_m\right)}{AAI_{im}} \qquad (D.1)$$

D.2.3 If only the mth analytical region is used to calculate the concentration of the ith analyte, set $MAU_i = MAU_{im}$.

D.2.4 If more than one analytical region is used to calculate the concentration of the ith analyte, set MAU_i equal to the weighted mean of the appropriate MAU_{im} values calculated above; the weight for each term in the mean is equal to the fraction of the total wavenumber range used for the calculation represented by each analytical region. Mathematically, if the set of analytical regions employed is [m′], then the MAU for each analytical region is given by equation D.2.

$$MAU_i = \sum_{k\in\{m'\}} W_k MAU_{ik} \qquad (D.2)$$

where the weight W_{ik} is defined for each term in the sum as

$$W_{ik} = \left(FM_k - FL_k\right)\left(\sum_{p\in\{m'\}}\left[FM_p - FL_p\right]\right)^{-1} \qquad (D.3)$$

D.2.5 Repeat sections D.2.1 through D.2.4 of this appendix to calculate the analogous values MIU_j for the interferants j = 1 to J. Replace the value (AU_i) (DL_i) in equation D.1 with $CPOT_j/20$; replace the value AAI_{im} in equation D.1 with IAI_{jm}.

APPENDIX E TO ADDENDUM TO METHOD 320—DETERMINING FRACTIONAL REPRODUCIBILITY UNCERTAINTIES (FRU)

E.1 *General*

To estimate the reproducibility of the spectroscopic results of the system, compare the CTS spectra recorded before and after preparing the reference spectra. Compare the difference between the spectra to their average band area. Perform the calculation for each analytical region on the portions of the CTS spectra associated with that analytical region.

E.2 Calculations

E.2.1 The CTS spectra {R1□ consist of N spectra, denoted by S_{1i}, i=1, N. Similarly, the CTS spectra {R2□ consist of N spectra, denoted by S_{2i}, i=1, N. Each S_{ki} is the spectrum of a single compound, where i denotes the compound and k denotes the set {Rk□ of which S_{ki} is a member. Form the spectra S_3 according to $S_{3i} = S_{2i} - S_{1i}$ for each i. Form the spectra S_4 according to $S_{4i} = [S_{2i}+S_{1i}]/2$ for each i.

E.2.2 Each analytical region m is associated with a portion of the CTS spectra S_{2i} and S_{1i}, for a particular i, with lower and upper wavenumber limits FFL_m and FFU_m, respectively.

E.2.3 For each m and the associated i, calculate the band area of S_{4i} in the wavenumber range FFU_m to FFL_m. Follow the guidelines of section B.1.2 of this addendum for this band area calculation. Denote the result by BAV_m.

E.2.4 For each m and the associated i, calculate the RMSD of S_{3i} between the absorbance values and their mean in the wavenumber range FFU_m to FFL_m. Denote the result by $SRMS_m$.

E.2.5 For each analytical region m, calculate FM_m using equation E.1,

$$FM_m = SRMS_m\left(FFU_m - FFL_m\right)/BAV_m \qquad (E.1)$$

E.2.6 If only the mth analytical region is used to calculate the concentration of the ith analyte, set $FRU_i = FM_m$.

E.2.7 If a number p_i of analytical regions are used to calculate the concentration of the ith analyte, set FRU_i equal to the weighted mean of the appropriate FM_m values calculated according to section E.2.5. Mathematically, if the set of analytical regions employed is {m′□, then FRU_i is given by equation E.2,

$$FRU_i = \sum_{k\in\{m'\}} W_{ik} FM_k \qquad (E.2)$$

where the W_{ik} are calculated as described in appendix D of this addendum.

APPENDIX F OF ADDENDUM TO METHOD 320—DETERMINING FRACTIONAL CALIBRATION UNCERTAINTIES (FCU)

F.1 General

F.1.1 The concentrations yielded by the computerized analytical program applied to each single-compound reference spectrum are defined as the indicated standard concentrations (ISC's). The ISC values for a single compound spectrum should ideally equal the accepted standard concentration (ASC) for one analyte or interferant, and should ideally be zero for all other compounds. Variations from these results are caused by errors in the ASC values, variations from the Beer's law (or modified Beer's law) model used to determine the concentrations, and noise in the spectra. When the first two effects dominate, the systematic nature of the errors is often apparent and the analyst shall take steps to correct them.

F.1.2 When the calibration error appears non-systematic, apply the procedures of sections F.2.1 through F.2.3 of this appendix to estimate the fractional calibration uncertainty (FCU) for each compound. The FCU is defined as the mean fractional error between the ASC and the ISC for all reference spectra with non-zero ASC for that compound. The FCU for each compound shall be less than the required fractional uncertainty specified in section 4.1 of this addendum.

F.1.3 The computerized analytical programs shall also be required to yield acceptably low concentrations for compounds with ISC = 0 when applied to the reference spectra. The ISC of each reference spectrum for each analyte or interferant shall not exceed that compound's minimum measurement uncertainty (MAU or MIU).

F.2 Calculations

F.2.1 Apply each analytical program to each reference spectrum. Prepare a similar table to that in Figure F.1 to present the ISC and ASC values for each analyte and interferant in each reference spectrum. Maintain the order of reference file names and compounds employed in preparing Figure F.1.

F.2.2 For all reference spectra in Figure F.1, verify that the absolute values of the ISC's are less than the compound's MAU (for analytes) or MIU (for interferants).

F.2.3 For each analyte reference spectrum, calculate the quantity (ASC–ISC)/ASC. For each analyte, calculate the mean of these values (the FCU_i for the ith analyte) over all reference spectra. Prepare a similar table to that in Figure F.2 to present the FCU_i and analytical uncertainty limit (AU_i) for each analyte.

FIGURE F.1.—PRESENTATION OF ACCEPTED STANDARD CONCENTRATIONS (ASC'S) AND INDICATED STANDARD CONCENTRATIONS (ISC'S)

Compound name	Reference spectrum file name	ASC (ppm)	ISC (ppm)					
					Analytes i=1 j=1	Interferants I J		

FIGURE F.2—PRESENTATION OF FRACTIONAL CALIBRATION UNCERTAINTIES (FCU'S) AND ANALYTICAL UNCERTAINTIES (AU'S)

Analyte name	FCU (%)	AU (%)

APPENDIX G TO ADDENDUM TO METHOD 320—MEASURING NOISE LEVELS

G.1 General

The root-mean-square (RMS) noise level is the standard measure of noise. The RMS noise level of a contiguous segment of a spectrum is the RMSD between the absorbance values that form the segment and the mean value of the segment (see appendix A of this addendum).

G.2 Calculations

G.2.1 Evacuate the absorption cell or fill it with UPC grade nitrogen at approximately one atmosphere total pressure.

G.2.2 Record two single beam spectra of signal integration period t_{SS}.

G.2.3 Form the double beam absorption spectrum from these two single beam spectra, and calculate the noise level RMS_{Sm} in the M analytical regions.

APPENDIX H OF ADDENDUM TO METHOD 320—DETERMINING SAMPLE ABSORPTION PATHLENGTH (L_S) AND FRACTIONAL ANALYTICAL UNCERTAINTY (FAU)

H.1 *General*

Reference spectra recorded at absorption pathlength (L_R), gas pressure (P_R), and gas absolute temperature (T_R) may be used to determine analyte concentrations in samples whose spectra are recorded at conditions different from that of the reference spectra, i.e., at absorption pathlength (L_S), absolute

temperature (T_S), and pressure (P_S). This appendix describes the calculations for estimating the fractional uncertainty (FAU) of this practice. It also describes the calculations for determining the sample absorption pathlength from comparison of CTS spectra, and for preparing spectra for further instrumental and procedural checks.

H.1.1 Before sampling, determine the sample absorption pathlength using least squares analysis. Determine the ratio L_S/L_R by comparing the spectral sets {R1□ and {R3□, which are recorded using the same CTS at L_S and L_R, and T_S and T_R, but both at P_R.

H.1.2 Determine the fractional analysis uncertainty (FAU) for each analyte by comparing a scaled CTS spectral set, recorded at L_S, T_S, and P_S, to the CTS reference spectra of the same gas, recorded at L_R, T_R, and P_R. Perform the quantitative comparison after recording the sample spectra, based on band areas of the spectra in the CTS absorbance band associated with each analyte.

H.2 Calculations

H.2.1 *Absorption Pathlength Determination.* Perform and document separate linear baseline corrections to each analytical region in the spectral sets {R1□ and {R3□⇆ Form a one-dimensional array A_R containing the absorbance values from all segments of {R1□ that are associated with the analytical regions; the members of the array are A_{Ri}, i = 1, n. Form a similar one-dimensional array A_S from the absorbance values in the spectral set {R3□; the members of the array are A_{Si}, i = 1, n. Based on the model $A_S = rA_R + E$, determine the least-squares estimate of r, the value of r which minimizes the square error E^2. Calculate the sample absorption pathlength, L_S, using equation H.1,

$$L_s = r'\left(T_s/T_R\right)L_R \qquad \text{(H.1)}$$

H.2.2 *Fractional Analysis Uncertainty.* Perform and document separate linear baseline corrections to each analytical region in the spectral sets {R1□ and {R4□⇆ Form the arrays A_S and A_R as described in section H.2.1 of this appendix, using values from {R1□ to form A_R, and values from {R4□ to form A_S. Calculate $NRMS_E$ and IA_{AV} using equations H.2 and H.3,

$$NRMS_E = \sqrt{\sum_{i=1}^{n}\left[A_{Si} - \left(\frac{T_R}{T_S}\right)\left(\frac{L_S}{L_R}\right)\left(\frac{P_S}{P_R}\right)A_{Ri}\right]} \qquad \text{(H.2)}$$

$$IA_{AV} = \frac{1}{2}\sum_{i=1}^{n}\left[A_{Si} + \left(\frac{T_R}{T_S}\right)\left(\frac{L_S}{L_R}\right)\left(\frac{P_S}{P_R}\right)A_{Ri}\right] \qquad \text{(H.3)}$$

The fractional analytical uncertainty, FAU, is given by equation H.4,

$$FAU = \frac{NRMS_E}{IA_{AV}} \qquad \text{(H.4)}$$

APPENDIX I TO ADDENDUM TO METHOD 320—DETERMINING FRACTIONAL MODEL UNCERTAINTIES (FMU)

I.1 General

To prepare analytical programs for FTIR analyses, the sample constituents must first be assumed. The calculations in this appendix, based upon a simulation of the sample spectrum, shall be used to verify the appropriateness of these assumptions. The simulated spectra consist of the sum of single compound reference spectra scaled to represent their contributions to the sample absorbance spectrum; scaling factors are based on the indicated standard concentrations (ISC) and measured (sample) analyte and interferant concentrations, the sample and reference absorption pathlengths, and the sample and reference gas pressures. No bandshape correction for differences in the temperature of the sample and reference spectra gases is made; such errors are included in the FMU estimate. The actual and simulated sample spectra are quantitatively compared to determine the fractional model uncertainty; this comparison uses the reference spectra band areas and residuals in the difference spectrum formed from the actual and simulated sample spectra.

I.2 Calculations

I.2.1 For each analyte (with scaled concentration RSA_i), select a reference spectrum SA_i with indicated standard concentration ISC_i. Calculate the scaling factors, RA_i, using equation I.1,

$$RA_i = \frac{T_R\ L_S\ P_S\ \ RSA_i}{T_S\ L_R\ P_R\ \ ISC_i} \qquad (I.1)$$

Form the spectra SAC_i by scaling each SA_i by the factor RA_i.

I.2.2 For each interferant, select a reference spectrum SI_k with indicated standard concentration ISC_k. Calculate the scaling factors, RI_k, using equation I.2,

$$RI_k = \frac{T_R\ L_S\ P_S\ RSI_k}{T_S\ L_R\ P_R\ ISC_k} \qquad (I.2)$$

Form the spectra SIC_k by scaling each SI_k by the factor RI_k.

I.2.3 For each analytical region, determine by visual inspection which of the spectra SAC_i and SIC_k exhibit absorbance bands within the analytical region. Subtract each spectrum SAC_i and SIC_k exhibiting absorbance from the sample spectrum S_S to form the spectrum SUB_S. To save analysis time and to avoid the introduction of unwanted noise into the subtracted spectrum, it is recommended that the calculation be made (1) only for those spectral data points within the analytical regions, and (2) for each analytical region separately using the original spectrum S_S.

I.2.4 For each analytical region m, calculate the RMSD of SUB_S between the absorbance values and their mean in the region FFU_m to FFL_m. Denote the result by $RMSS_m$.

I.2.5 For each analyte i, calculate FM_m, using equation I.3,

$$FM_m = \frac{RMSS_m\left(FFU_m - FFL_m\right)AU_i DL_i}{AAI_i\ RSA_i} \qquad (I.3)$$

for each analytical region associated with the analyte.

I.2.6 If only the mth analytical region is used to calculate the concentration of the ith analyte, set $FMU_i=FM_m$.

I.2.7 If a number of analytical regions are used to calculate the concentration of the ith analyte, set FM_i equal to the weighted mean of the appropriate FM_m values calculated using equation I–3. Mathematically, if the set of analytical regions employed is {m′□, then the fractional model uncertainty, FMU, is given by equation I.4,

$$FMU_i = \sum_{k\in\{m'\}} W_{ik} FM_k \qquad (I.4)$$

where W_{ik} is calculated as described in appendix D of this addendum.

Appendix J of Addendum to Method 320—Determining Overall Concentration Uncertainties (OCU)

The calculations in this addendum estimate the measurement uncertainties for various FTIR measurements. The lowest possible overall concentration uncertainty (OCU) for an analyte is its MAU value, which is an estimate of the absolute concentration uncertainty when spectral noise dominates the measurement error. However, if the product of the largest fractional concentration uncertainty (FRU, FCU, FAU, or FMU) and the measured concentration of an analyte exceeds the MAU for the analyte, then the OCU is this product. In mathematical terms, set OFU_i = MAX{FRU_i, FCU_i, FAU_i, FMU_i} and OCU_i = MAX{RSA_i*OFU_i, MAU_i}.

Test Method 321—Measurement of Gaseous Hydrogen Chloride Emissions At Portland Cement Kilns by Fourier Transform Infrared (FTIR) Spectroscopy

1.0 Introduction

This method should be performed by those persons familiar with the operation of Fourier Transform Infrared (FTIR) instrumentation in the application to source sampling. This document describes the sampling procedures for use in the application of FTIR spectrometry for the determination of vapor phase hydrogen chloride (HCl) concentrations both before and after particulate matter control devices installed at portland cement kilns. A procedure for analyte spiking is included for quality assurance. This method is considered to be self validating provided that the requirements listed in section 9 of this method are followed. The analytical procedures for interpreting infrared spectra from emission measurements are described in the ''Protocol For The Use of Extractive Fourier Transform Infrared (FTIR) Spectrometry in Analyses of Gaseous Emissions From Stationary Industrial Sources'', included as an addendum to proposed Method 320 of this appendix (hereafter referred to as the ''FTIR Protocol)''. References 1 and 2 describe the use of FTIR spectrometry in field measurements. Sample transport presents the principal difficulty in directly measuring HCl emissions. This identical problem must be overcome by any extractive measurement method. HCl is reactive and water soluble.

The sampling system must be adequately designed to prevent sample condensation in the system.

1.1 Scope and Application

This method is specifically designed for the application of FTIR Spectrometry in extractive measurements of gaseous HCl concentrations in portland cement kiln emissions.

1.2 Applicability

This method applies to the measurement of HCl [CAS No. 7647–01–0]. This method can be applied to the determination of HCl concentrations both before and after particulate matter control devices installed at portland cement manufacturing facilities. This method applies to either continuous flow through measurement (with isolated sample analysis) or grab sampling (batch analysis). HCl is measured using the mid-infrared spectral region for analysis (about 400 to 4000 cm^{-1} or 25 to 2.5 μm). Table 1 lists the suggested analytical region for quantification of HCl taking the interference from water vapor into consideration.

TABLE 1.—EXAMPLE ANALYTICAL REGION FOR HCL

Compound	Analytical region (cm^{-1})	Potential interferants
Hydrogen chloride	2679–2840	Water.

1.3 Method Range and Sensitivity

1.3.1 The analytical range is determined by the instrumental design and the composition of the gas stream. For practical purposes there is no upper limit to the range because the pathlength may be reduced or the sample may be diluted. The lower detection range depends on (1) the absorption coefficient of the compound in the analytical frequency region, (2) the spectral resolution, (3) the interferometer sampling time, (4) the detector sensitivity and response, and (5) the absorption pathlength.

1.3.2 The practical lower quantification range is usually higher than the instrument sensitivity allows and is dependent upon (1) the presence of interfering species in the exhaust gas including H_2O, CO_2, and SO_2, (2) analyte losses in the sampling system, (3) the optical alignment of the gas cell and transfer optics, and (4) the quality of the reflective surfaces in the cell (cell throughput). Under typical test conditions (moisture content of up to 30% and CO_2 concentrations from 1 to 15 percent), a 22 meter path length cell with a suitable sampling system may achieve a lower quantification range of from 1 to 5 ppm for HCl.

1.4 Data Quality Objectives

1.4.1 In designing or configuring the analytical system, data quality is determined by measuring of the root mean square deviation (RMSD) of the absorbance values within a chosen spectral (analytical) region. The RMSD provides an indication of the signal-to-noise ratio (S/N) of the spectral baseline. Appendix D of the FTIR Protocol (the addendum to Method 320 of this appendix) presents a discussion of the relationship between the RMSD, lower detection limit, DL_i, and analytical uncertainty, AU_i. It is important to consider the target analyte quantification limit when performing testing with FTIR instrumentation, and to optimize the system to achieve the desired detection limit.

1.4.2 Data quality is determined by measuring the root mean square (RMS) noise level in each analytical spectral region (appendix C of the FTIR Protocol). The RMS noise is defined as the root mean square deviation (RMSD) of the absorbance values in an analytical region from the mean absorbance value in the same region. Appendix D of the *FTIR Protocol* defines the minimum analyte uncertainty (MAU), and how the RMSD is used to calculate the MAU. The MAU_{im} is the minimum concentration of the ith analyte in the mth analytical region for which the analytical uncertainty limit can be maintained. Table 2 presents example values of AU and MAU using the analytical region presented in Table 1.

TABLE 2.—EXAMPLE PRE-TEST PROTOCOL CALCULATIONS FOR HYDROGEN CHLORIDE

	HCl
Reference concentration (ppm-meters)/K	11.2
Reference Band area	2.881
DL (ppm-meters)/K	0.1117
AU	0.2
CL (DL × AU)	0.02234
FL (cm^{-1})	2679.83
FU (cm^{-1})	2840.93
FC (cm^{-1})	2760.38
AAI (ppm-meters)/K	0.06435
RMSD	2.28E–03
MAU (ppm-meters)/K	1.28E–01
MAU ppm at 22 meters and 250 °F	.0.2284

2.0 Summary of Method

2.1 Principle

See Method 320 of this appendix. HCl can also undergo rotation transitions by absorbing energy in the far-infrared spectral region. The rotational transitions are superimposed on the vibrational fundamental to give a series of lines centered at the fundamental vibrational frequency, 2885 cm^{-1}. The frequencies of absorbance and the pattern of rotational/vibrational lines are unique to HCl. When this distinct pattern is observed in an infrared spectrum of an unknown sample, it unequivocally identifies HCl as a component of the mixture. The infrared spectrum of HCl is very distinctive and cannot be confused with the spectrum of any other compound. See Reference 6.

2.2 *Sampling and Analysis.* See Method 320 of this appendix.

2.3 *Operator Requirements.* The analyst must have knowledge of spectral patterns to choose an appropriate absorption path length or determine if sample dilution is necessary. The analyst should also understand FTIR instrument operation well enough to choose instrument settings that are consistent with the objectives of the analysis.

3.0 Definitions

See appendix A of the FTIR Protocol.

4.0 Interferences

This method will not measure HCl under conditions: (1) where the sample gas stream can condense in the sampling system or the instrumentation, or (2) where a high moisture content sample relative to the analyte concentrations imparts spectral interference due to the water vapor absorbance bands. For measuring HCl the first (sampling) consideration is more critical. Spectral interference from water vapor is not a significant problem except at very high moisture levels and low HCl concentrations.

4.1 *Analytical Interferences.* See Method 320 of this appendix.

4.1.1 *Background Interferences.* See Method 320 of this appendix.

4.1.2 *Spectral interferences.* Water vapor can present spectral interference for FTIR gas analysis of HCl. Therefore, the water vapor in the spectra of kiln gas samples must be accounted for. This means preparing at least one spectrum of a water vapor sample where the moisture concentration is close to that in the kiln gas.

4.2 *Sampling System Interferences.* The principal sampling system interferant for measuring HCl is water vapor. Steps must be taken to ensure that no condensation forms anywhere in the probe assembly, sample lines, or analytical instrumentation. Cold spots anywhere in the sampling system must be avoided. The extent of sampling system bias in the FTIR analysis of HCl depends on concentrations of potential interferants, moisture content of the gas stream, temperature of the gas stream, temperature of sampling system components, sample flow rate, and reactivity of HCl with other species in the gas stream (e.g., ammonia). For measuring HCl in a wet gas stream the temperatures of the gas stream, sampling components, and the sample flow rate are of primary importance. Analyte spiking with HCl is performed to demonstrate the integrity of the sampling system for transporting HCl vapor in the flue gas to the FTIR instrument. See section 9 of this method for a complete description of analyte spiking.

5.0 Safety

5.1 Hydrogen chloride vapor is corrosive and can cause irritation or severe damage to respiratory system, eyes and skin. Exposure to this compound should be avoided.

5.2 This method may involve sampling at locations having high positive or negative pressures, or high concentrations of hazardous or toxic pollutants, and can not address all safety problems encountered under these diverse sampling conditions. It is the responsibility of the tester(s) to ensure proper safety and health practices, and to determine the applicability of regulatory limitations before performing this test method. Leak-check procedures are outlined in section 8.2 of Method 320 of this appendix.

6.0 Equipment and Supplies

NOTE: Mention of trade names or specific products does not constitute endorsement by the Environmental Protection Agency.

6.1 *FTIR Spectrometer and Detector.* An FTIR Spectrometer system (interferometer, transfer optics, gas cell and detector) having the capability of measuring HCl to the predetermined minimum detectable level required (see section 4.1.3 of the FTIR Protocol). The system must also include an accurate means to control and/or measure the temperature of the FTIR gas analysis cell, and a personal computer with compatible software that provides real-time updates of the spectral profile during sample and spectral collection.

6.2 *Pump.* Capable of evacuating the FTIR cell volume to 1 Torr (133.3 Pascals) within two minutes (for batch sample analysis).

6.3 *Mass Flow Meters/Controllers.* To accurately measure analyte spike flow rate, having the appropriate calibrated range and a stated accuracy of ±2 percent of the absolute measurement value. This device must be calibrated with the major component of the calibration/spike gas (e.g., nitrogen) using an NIST traceable bubble meter or equivalent. Single point calibration checks should be performed daily in the field. When spiking

HCl, the mass flow meter/controller should be thoroughly purged before and after introduction of the gas to prevent corrosion of the interior parts.

6.4 *Polytetrafluoroethane tubing*. Diameter and length suitable to connect cylinder regulators.

6.5 *Stainless Steel tubing*. Type 316 of appropriate length and diameter for heated connections.

6.6 *Gas Regulators*. Purgeable HCl regulator.

6.7 *Pressure Gauge*. Capable of measuring pressure from 0 to 1000 Torr (133.3 Pa=1 Torr) within ±5 percent.

6.8 *Sampling Probe*. Glass, stainless steel or other appropriate material of sufficient length and physical integrity to sustain heating, prevent adsorption of analytes and capable of reaching gas sampling point.

6.9 *Sampling Line*. Heated 180 °C (360 °F) and fabricated of either stainless steel, polytetrafluoroethane or other material that prevents adsorption of HCl and transports effluent to analytical instrumentation. The extractive sample line must have the capability to transport sample gas to the analytical components as well as direct heated calibration spike gas to the calibration assembly located at the sample probe. It is important to minimize the length of heated sample line.

6.10 *Particulate Filters*. A sintered stainless steel filter rated at 20 microns or greater may be placed at the inlet of the probe (for removal of large particulate matter). A heated filter (Balston or equivalent) rated at 1 micron is necessary for primary particulate matter removal, and shall be placed immediately after the heated probe. The filter/filter holder temperature should be maintained at 180 °C (360 °F).

6.11 *Calibration/Analyte Spike Assembly*. A heated three-way valve assembly (or equivalent) to introduce surrogate spikes into the sampling system at the outlet of the probe before the primary particulate filter.

6.12 *Sample Extraction Pump*. A leak-free heated head pump (KNF Neuberger or equivalent) capable of extracting sample effluent through entire sampling system at a rate which prevents analyte losses and minimizes analyzer response time. The pump should have a heated by-pass and may be placed either before the FTIR instrument or after. If the sample pump is located upstream of the FTIR instrument, it must be fabricated from materials non-reactive to HCl. The sampling system and FTIR measurement system shall allow the operator to obtain at least six sample spectra during a one-hour period.

6.13 *Barometer*. For measurement of barometric pressure.

6.14 *Gas Sample Manifold*. A distribution manifold having the capabilities listed in sections 6.14.1 through 6.14.4;

6.14.1 Delivery of calibration gas directly to the analytical instrumentation;

6.14.2 Delivery of calibration gas to the sample probe (system calibration or analyte spike) via a heated traced sample line;

6.14.3 Delivery of sample gas (kiln gas, spiked kiln gas, or system calibrations) to the analytical instrumentation;

6.14.4 Delivery (optional) of a humidified nitrogen sample stream.

6.15 *Flow Measurement Device*. Type S Pitot tube (or equivalent) and Magnahelic set for measurement of volumetric flow rate.

7.0 Reagents and Standards

HCl can be purchased in a standard compressed gas cylinder. The most stable HCl cylinder mixture available has a concentration certified at ±5 percent. Such a cylinder is suitable for performing analyte spiking because it will provide reproducible samples. The stability of the cylinder can be monitored over time by periodically performing direct FTIR analysis of cylinder samples. It is recommended that a 10–50 ppm cylinder of HCl be prepared having from 2–5 ppm SF6 as a tracer compound. (See sections 7.1 through 7.3 of Method 320 of this appendix for a complete description of the use of existing HCl reference spectra. See section 9.1 of Method 320 of this appendix for a complete discussion of standard concentration selection.)

8.0 Sample Collection, Preservation and Storage

See also Method 320 of this appendix.

8.1 *Pretest*. A screening test is ideal for obtaining proper data that can be used for preparing analytical program files. Information from literature surveys and source personnel is also acceptable. Information about the sampling location and gas stream composition is required to determine the optimum sampling system configuration for measuring HCl. Determine the percent moisture of the kiln gas by Method 4 of appendix A to part 60 of this chapter or by performing a wet bulb/dry bulb measurement. Perform a preliminary traverse of the sample duct or stack and select the sampling point(s). Acquire an initial spectrum and determine the optimum operational pathlength of the instrument.

8.2 *Leak-Check*. See Method 320 of this appendix, section 8.2 for direction on performing leak-checks.

8.3 *Background Spectrum*. See Method 320 of this appendix, section 8.5 for direction in background spectral acquisition.

8.4 *Pre-Test Calibration Transfer Standard (Direct Instrument Calibration)*. See Method 320 of this appendix, section 8.3 for direction in CTS spectral acquisition.

8.5 *Pre-Test System Calibration*. See Method 320 of this appendix, sections 8.6.1 through

8.6.2 for direction in performing system calibration.

8.6 Sampling

8.6.1 *Extractive System.* An extractive system maintained at 180 °C (360 °F) or higher which is capable of directing a total flow of at least 12 L/min to the sample cell is required (References 1 and 2). Insert the probe into the duct or stack at a point representing the average volumetric flow rate and 25 percent of the cross sectional area. Co-locate an appropriate flow monitoring device with the sample probe so that the flow rate is recorded at specified time intervals during emission testing (e.g., differential pressure measurements taken every 10 minutes during each run).

8.6.2 *Batch Samples.* Evacuate the absorbance cell to 5 Torr (or less) absolute pressure before taking first sample. Fill the cell with kiln gas to ambient pressure and record the infrared spectrum, then evacuate the cell until there is no further evidence of infrared absorption. Repeat this procedure, collecting a total of six separate sample spectra within a 1-hour period.

8.6.3 *Continuous Flow Through Sampling.* Purge the FTIR cell with kiln gas for a time period sufficient to equilibrate the entire sampling system and FTIR gas cell. The time required is a function of the mechanical response time of the system (determined by performing the system calibration with the CTS gas or equivalent), and by the chemical reactivity of the target analytes. If the effluent target analyte concentration is not variable, observation of the spectral up-date of the flowing gas sample should be performed until equilibration of the sample is achieved. Isolate the gas cell from the sample flow by directing the purge flow to vent. Record the spectrum and pressure of the sample gas. After spectral acquisition, allow the sample gas to purge the cell with at least three volumes of kiln gas. The time required to adequately purge the cell with the required volume of gas is a function of (1) cell volume, (2) flow rate through the cell, and (3) cell design. It is important that the gas introduction and vent for the FTIR cell provides a complete purge through the cell.

8.6.4 *Continuous Sampling.* In some cases it is possible to collect spectra continuously while the FTIR cell is purged with sample gas. The sample integration time, t_{ss}, the sample flow rate through the gas cell, and the sample integration time must be chosen so that the collected data consist of at least 10 spectra with each spectrum being of a separate cell volume of flue gas. Sampling in this manner may only be performed if the native source analyte concentrations do not affect the test results.

8.7 Sample Conditioning

8.7.1 *High Moisture Sampling.* Kiln gas emitted from wet process cement kilns may contain 3- to 40 percent moisture. Zinc selenide windows or the equivalent should be used when attempting to analyze hot/wet kiln gas under these conditions to prevent dissolution of water soluble window materials (e.g., KBr).

8.7.2 *Sample Dilution.* The sample may be diluted using an in-stack dilution probe, or an external dilution device provided that the sample is not diluted below the instrument's quantification range. As an alternative to using a dilution probe, nitrogen may be dynamically spiked into the effluent stream in the same manner as analyte spiking. A constant dilution rate shall be maintained throughout the measurement process. It is critical to measure and verify the exact dilution ratio when using a dilution probe or the nitrogen spiking approach. Calibrating the system with a calibration gas containing an appropriate tracer compound will allow determination of the dilution ratio for most measurement systems. The tester shall specify the procedures used to determine the dilution ratio, and include these calibration results in the report.

8.8 *Sampling QA, Data Storage and Reporting.* See the FTIR Protocol. Sample integration times shall be sufficient to achieve the required signal-to-noise ratio, and all sample spectra should have unique file names. Two copies of sample interferograms and processed spectra will be stored on separate computer media. For each sample spectrum the analyst must document the sampling conditions, the sampling time (while the cell was being filled), the time the spectrum was recorded, the instrumental conditions (path length, temperature, pressure, resolution, integration time), and the spectral file name. A hard copy of these data must be maintained until the test results are accepted.

8.9 *Signal Transmittance.* Monitor the signal transmittance through the instrumental system. If signal transmittance (relative to the background) drops below 95 percent in any spectral region where the sample does not absorb infrared energy, then a new background spectrum must be obtained.

8.10 *Post-test CTS.* After the sampling run completion, record the CTS spectrum. Analysis of the spectral band area used for quantification from pre- and post-test CTS spectra should agree to within ±5 percent or corrective action must be taken.

8.11 *Post-test QA.* The sample spectra shall be inspected immediately after the run to verify that the gas matrix composition was close to the assumed gas matrix, (this is necessary to account for the concentrations of the interferants for use in the analytical analysis programs), and to confirm that the

sampling and instrumental parameters were appropriate for the conditions encountered.

9.0 Quality Control

Use analyte spiking to verify the effectiveness of the sampling system for the target compounds in the actual kiln gas matrix. QA spiking shall be performed before and after each sample run. QA spiking shall be performed after the pre- and post-test CTS direct and system calibrations. The system biases calculated from the pre- and post-test dynamic analyte spiking shall be within ±30 percent for the spiked surrogate analytes for the measurements to be considered valid. See sections 9.3.1 through 9.3.2 for the requisite calculations. Measurement of the undiluted spike (direct-to-cell measurement) involves sending dry, spike gas to the FTIR cell, filling the cell to 1 atmosphere and obtaining the spectrum of this sample. The direct-to-cell measurement should be performed before each analyte spike so that the recovery of the dynamically spiked analytes may be calculated. Analyte spiking is only effective for assessing the integrity of the sampling system when the concentration of HCl in the source does not vary substantially. Any attempt to quantify an analyte recovery in a variable concentration matrix will result in errors in the expected concentration of the spiked sample. If the kiln gas target analyte concentrations vary by more than ±5 percent (or 5 ppm, whichever is greater) in the time required to acquire a sample spectrum, it may be necessary to: (1) Use a dual sample probe approach, (2) use two independent FTIR measurement systems, (3) use alternate QA/QC procedures, or (4) postpone testing until stable emission concentrations are achieved. (See section 9.2.3 of this method). It is recommended that a laboratory evaluation be performed before attempting to employ this method under actual field conditions. The laboratory evaluation shall include (1) performance of all applicable calculations in section 4 of the FTIR Protocol; (2) simulated analyte spiking experiments in dry (ambient) and humidified sample matrices using HCl; and (3) performance of bias (recovery) calculations from analyte spiking experiments. It is not necessary to perform a laboratory evaluation before every field test. The purpose of the laboratory study is to demonstrate that the actual instrument and sampling system configuration used in field testing meets the requirements set forth in this method.

9.1 *Spike Materials.* Perform analyte spiking with an HCl standard to demonstrate the integrity of the sampling system.

9.1.1 An HCl standard of approximately 50 ppm in a balance of ultra pure nitrogen is recommended. The SF_6 (tracer) concentration shall be 2 to 5 ppm depending upon the measurement pathlength. The spike ratio (spike flow/total flow) shall be no greater than 1:10, and an ideal spike concentration should approximate the native effluent concentration.

9.1.2 The ideal spike concentration may not be achieved because the target concentration cannot be accurately predicted prior to the field test, and limited calibration standards will be available during testing. Therefore, practical constraints must be applied that allow the tester to spike at an anticipated concentration. For these tests, the analyte concentration contributed by the HCl standard spike should be 1 to 5 ppm or should more closely approximate the native concentration if it is greater.

9.2 Spike Procedure

9.2.1 A spiking/sampling apparatus is shown in Figure 2. Introduce the spike/tracer gas mixture at a constant flow (±2 percent) rate at approximately 10 percent of the total sample flow. (For example, introduce the surrogate spike at 1 L/min 20 cc/min, into a total sample flow rate of 10 L/min). The spike must be pre-heated before introduction into the sample matrix to prevent a localized condensation of the gas stream at the spike introduction point. A heated sample transport line(s) containing multiple transport tubes within the heated bundle may be used to spike gas up through the sampling system to the spike introduction point. Use a calibrated flow device (e.g., mass flow meter/controller), to monitor the spike flow as indicated by a calibrated flow meter or controller, or alternately, the SF_6 tracer ratio may be calculated from the direct measurement and the diluted measurement. It is often desirable to use the tracer approach in calculating the spike/total flow ratio because of the difficulty in accurately measuring hot/wet total flow. The tracer technique has been successfully used in past validation efforts (Reference 1).

9.2.2 Perform a direct-to-cell measurement of the dry, undiluted spike gas. Introduce the spike directly to the FTIR cell, bypassing the sampling system. Fill cell to 1 atmosphere and collect the spectrum of this sample. Ensure that the spike gas has equilibrated to the temperature of the measurement cell before acquisition of the spectra. Inspect the spectrum and verify that the gas is dry and contains negligible CO_2. Repeat the process to obtain a second direct-to-cell measurement. Analysis of spectral band areas for HCl from these duplicate measurements should agree to within ±5 percent of the mean.

9.2.3 *Analyte Spiking.* Determine whether the kiln gas contains native concentrations of HCl by examination of preliminary spectra. Determine whether the concentration varies significantly with time by observing a continuously up-dated spectrum of sample gas in the flow-through sampling mode. If

the concentration varies by more than ±5 percent during the period of time required to acquire a spectra, then an alternate approach should be used. One alternate approach uses two sampling lines to convey sample to the gas distribution manifold. One of the sample lines is used to continuously extract unspiked kiln gas from the source. The other sample line serves as the analyte spike line. One FTIR system can be used in this arrangement. Spiked or unspiked sample gas may be directed to the FTIR system from the gas distribution manifold, with the need to purge only the components between the manifold and the FTIR system. This approach minimizes the time required to acquire an equilibrated sample of spiked or unspiked kiln gas. If the source varies by more than ±5 percent (or 5 ppm, whichever is greater) in the time it takes to switch from the unspiked sample line to the spiked sample line, then analyte spiking may not be a feasible means to determine the effectiveness of the sampling system for the HCl in the sample matrix. A second alternative is to use two completely independent FTIR measurement systems. One system would measure unspiked samples while the other system would measure the spiked samples. As a last option, (where no other alternatives can be used) a humidified nitrogen stream may be generated in the field which approximates the moisture content of the kiln gas. Analyte spiking into this humidified stream can be employed to assure that the sampling system is adequate for transporting the HCl to the FTIR instrumentation.

9.2.3.1 Adjust the spike flow rate to approximately 10 percent of the total flow by metering spike gas through a calibrated mass flowmeter or controller. Allow spike flow to equilibrate within the sampling system before analyzing the first spiked kiln gas samples. A minimum of two consecutive spikes are required. Analysis of the spectral band area used for quantification should agree to within ±5 percent or corrective action must be taken.

9.2.3.2 After QA spiking is completed, the sampling system components shall be purged with nitrogen or dry air to eliminate traces of the HCl compound from the sampling system components. Acquire a sample spectra of the nitrogen purge to verify the absence of the calibration mixture.

9.2.3.3 Analyte spiking procedures must be carefully executed to ensure that meaningful measurements are achieved. The requirements of sections 9.2.3.3.1 through 9.2.3.3.4 shall be met.

9.2.3.3.1 The spike must be in the vapor phase, dry, and heated to (or above) the kiln gas temperature before it is introduced to the kiln gas stream.

9.2.3.3.2 The spike flow rate must be constant and accurately measured.

9.2.3.3.3 The total flow must also be measured continuously and reliably or the dilution ratio must otherwise be verified before and after a run by introducing a spike of a non-reactive, stable compound (i.e., tracer).

9.2.3.3.4 The tracer must be inert to the sampling system components, not contained in the effluent gas, and readily detected by the analytical instrumentation. Sulfur hexafluoride (SF_6) has been used successfully (References 1 and 2) for this purpose.

9.3 Calculations

9.3.1 *Recovery*. Calculate the percent recovery of the spiked analytes using equations 1 and 2.

$$\%R = 100 \times \frac{S_m - S_u(1 - DF)}{DF \times C_s} \qquad (1)$$

S_m = Mean concentration of the analyte spiked effluent samples (observed).

$$C_e = DF \times C_s + S_u(1 - DF) \qquad (2)$$

C_e = Expected concentration of the spiked samples (theoretical).
D_f = dilution Factor (Total flow/Spike flow). total flow = spike flow plus effluent flow.
C_s = cylinder concentration of spike gas.
S_u = native concentration of analytes in unspiked samples.

The spike dilution factor may be confirmed by measuring the total flow and the spike flow directly. Alternately, the spike dilution can be verified by comparing the concentration of the tracer compound in the spiked samples (diluted) to the tracer concentration in the direct (undiluted) measurement of the spike gas.
If SF_6 is the tracer gas, then

$$D_f = [SF_6]_{spike} / [SF_6]_{direct} \qquad (3)$$

$[SF_6]_{spike}$ = the diluted SF_6 concentration measured in a spiked sample.
$[SF_6]_{direct}$ = the SF_6 concentration measured directly.

9.3.2 Bias. The bias may be determined by the difference between the observed spike value and the expected response (i.e., the equivalent concentration of the spiked material plus the analyte concentration adjusted for spike dilution). Bias is defined by section 6.3.1 of EPA Method 301 of this appendix (Reference 8) as,

$$B = S_m - C_e \qquad (4)$$

Where:
B = Bias at spike level.
S_m = Mean concentration of the analyte spiked samples.
C_e = Expected concentration of the analyte in spiked samples.

Acceptable recoveries for analyte spiking are ±30 percent. Application of correction factors

to the data based upon bias and recovery calculations is subject to the approval of the Administrator.

10.0 Calibration and Standardization

10.1 *Calibration transfer standards (CTS).* The EPA Traceability Protocol gases or NIST traceable standards, with a minimum accuracy of ±2 percent shall be used. For other requirements of the CTS, see the FTIR Protocol section 4.5.

10.2 *Signal-to-Noise Ratio (S/N).* The S/N shall be less than the minimum acceptable measurement uncertainty in the analytical regions to be used for measuring HCl.

10.3 *Absorbance Pathlength.* Verify the absorbance path length by comparing CTS spectra to reference spectra of the calibration gas(es).

10.4 *Instrument Resolution.* Measure the line width of appropriate CTS band(s) to verify instrumental resolution.

10.5 *Apodization Function.* Choose the appropriate apodization function. Determine any appropriate mathematical transformations that are required to correct instrumental errors by measuring the CTS. Any mathematical transformations must be documented and reproducible. Reference 9 provides additional information about FTIR instrumentation.

11.0 Analytical Procedure

A full description of the analytical procedures is given in sections 4.6–4.11, sections 5, 6, and 7, and the appendices of the FTIR Protocol. Additional description of quantitative spectral analysis is provided in References 10 and 11.

12.0 Data Analysis and Calculations

Data analysis is performed using appropriate reference spectra whose concentrations can be verified using CTS spectra. Various analytical programs (References 10 and 11) are available to relate sample absorbance to a concentration standard. Calculated concentrations should be verified by analyzing spectral baselines after mathematically subtracting scaled reference spectra from the sample spectra. A full description of the data analysis and calculations may be found in the FTIR Protocol (sections 4.0, 5.0, 6.0 and appendices).

12.1 Calculated concentrations in sample spectra are corrected for differences in absorption pathlength between the reference and sample spectra by

$$C_{corr} = \left(L_r / L_s\right) \times \left(T_s / T_r\right) \times \left(C_{calc}\right) \qquad (5)$$

Where:

C_{corr} = The pathlength corrected concentration.

C_{calc} = The initial calculated concentration (output of the multicomponent analysis program designed for the compound).

L_r = The pathlength associated with the reference spectra.

L_s = The pathlength associated with the sample spectra.

T_s = The absolute temperature (K) of the sample gas.

T_r = The absolute temperature (K) at which reference spectra were recorded.

12.2 The temperature correction in equation 5 is a volumetric correction. It does not account for temperature dependence of rotational-vibrational relative line intensities. Whenever possible, the reference spectra used in the analysis should be collected at a temperature near the temperature of the FTIR cell used in the test to minimize the calculated error in the measurement (FTIR Protocol, appendix D). Additionally, the analytical region chosen for the analysis should be sufficiently broad to minimize errors caused by small differences in relative line intensities between reference spectra and the sample spectra.

13.0 Method Performance

A description of the method performance may be found in the FTIR Protocol. This method is self validating provided the results meet the performance specification of the QA spike in sections 9.0 through 9.3 of this method.

14.0 Pollution Prevention

This is a gas phase measurement. Gas is extracted from the source, analyzed by the instrumentation, and discharged through the instrument vent.

15.0 Waste Management

Gas standards of HCl are handled according to the instructions enclosed with the material safety data sheet.

16.0 References

1. ''Laboratory and Field Evaluation of a Methodology for Determination of Hydrogen Chloride Emissions From Municipal and Hazardous Waste Incinerators,'' S.C. Steinsberger and J.H. Margeson. Prepared for U.S. Environmental Protection Agency, Research Triangle Park, NC. NTIS Report No. PB89–220586. (1989).

2. ''Evaluation of HCl Measurement Techniques at Municipal and Hazardous Waste Incinerators,'' S.A. Shanklin, S.C. Steinsberger, and L. Cone, Entropy, Inc. Prepared for U.S. Environmental Protection Agency, Research Triangle Park, NC. NTIS Report No. PB90–221896. (1989).

3. ''Fourier Transform Infrared (FTIR) Method Validation at a Coal Fired-Boiler,'' Entropy, Inc. Prepared for U.S. Environmental Protection Agency, Research Triangle Park, NC. EPA Publication No. EPA–454/R95–004. NTIS Report No. PB95–193199. (1993).

4. ''Field Validation Test Using Fourier Transform Infrared (FTIR) Spectrometry To Measure Formaldehyde, Phenol and Methanol at a Wool Fiberglass Production Facility.'' Draft. U.S. Environmental Protection Agency Report, Entropy, Inc., EPA Contract No. 68D20163, Work Assignment I–32.

5. Kinner, L.L., Geyer, T.G., Plummer, G.W., Dunder, T.A., Entropy, Inc. ''Application of FTIR as a Continuous Emission Monitoring System.'' Presentation at 1994 International Incineration Conference, Houston, TX. May 10, 1994.

6. ''Molecular Vibrations; The Theory of Infrared and Raman Vibrational Spectra,'' E. Bright Wilson, J.C. Decius, and P.C. Cross, Dover Publications, Inc., 1980. For a less intensive treatment of molecular rotational-vibrational spectra see, for example, ''Physical Chemistry,'' G.M. Barrow, chapters 12, 13, and 14, McGraw Hill, Inc., 1979.

7. ''Laboratory and Field Evaluations of Ammonium Chloride Interference in Method 26,'' U.S. Environmental Protection Agency Report, Entropy, Inc., EPA Contract No. 68D20163, Work Assignment No. I–45.

8. 40 CFR 63, appendix A. Method 301—Field Validation of Pollutant Measurement Methods from Various Waste Media.

9. ''Fourier Transform Infrared Spectrometry,'' Peter R. Griffiths and James de Haseth, Chemical Analysis, 83, 16–25, (1986), P.J. Elving, J.D. Winefordner and I.M. Kolthoff (ed.), John Wiley and Sons.

10. ''Computer-Assisted Quantitative Infrared Spectroscopy,'' Gregory L. McClure (ed.), ASTM Special Publication 934 (ASTM), 1987.

11. ''Multivariate Least-Squares Methods Applied to the Quantitative Spectral Analysis of Multicomponent Mixtures,'' Applied Spectroscopy, 39(10), 73–84, 1985.

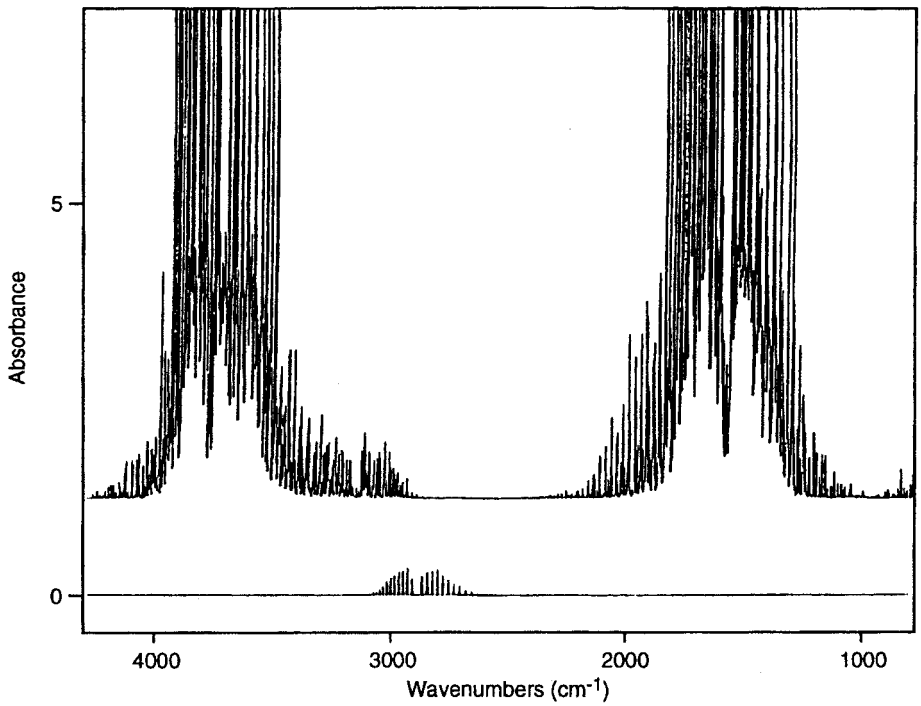

Top, water vapor (194hsub); Bottom, HCl at 11.4 (ppm-M)/K.

Figure 1. FTIR Spectra of HCl and Water.

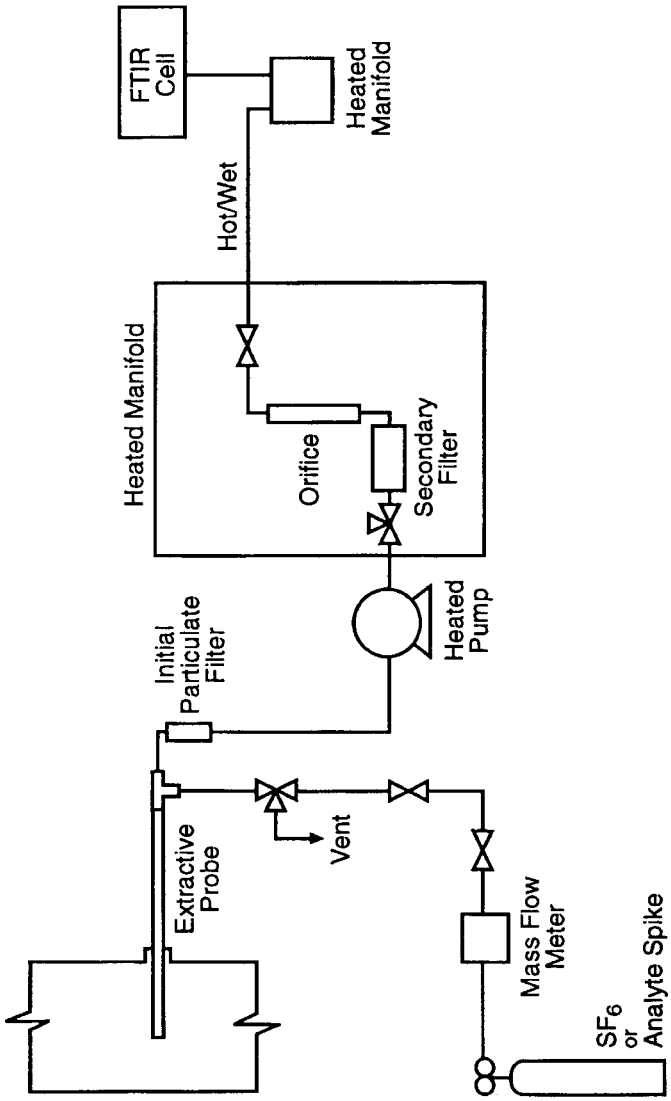

Figure 2. FTIR Sampling/Spiking System.

[57 FR 61992, Dec. 29, 1992]

EDITORIAL NOTE: For FEDERAL REGISTER citations affecting appendix A to part 63, see the List of CFR Sections Affected, which appears in the Finding Aids section of the printed volume and on GPO Access.

APPENDIX B TO PART 63—SOURCES DEFINED FOR EARLY REDUCTION PROVISIONS

Source	Location of definition
1. Organic Process Equipment in Volatile Hazardous Air Pollutant Service at Chemical Plants and Other Designated Facilities.	56 FR 9315, March 6, 1991, Announcement of Negotiated Rulemaking
a. All valves in gas or light liquid service within a process unit	
b. All pumps in light liquid service within a process unit	
c. All connectors in gas or light liquid service within a process unit	
d. Each compressor	
e. Each product accumulator vessel	
f. Each agitator	
g. Each pressure relief device	
h. Each open-ended valve or line	
i. Each sampling connection system	
j. Each instrumentation system	
k. Each pump, valve, or connector in heavy liquid service	
l. Each closed vent system and control device	

APPENDIX C TO PART 63—DETERMINATION OF THE FRACTION BIODEGRADED (F_{bio}) IN A BIOLOGICAL TREATMENT UNIT

I. Purpose

The purpose of this appendix is to define the procedures for an owner or operator to use to calculate the site specific fraction of organic compounds biodegraded (F_{bio}) in a biological treatment unit. If an acceptable level of organic compounds is destroyed rather than emitted to the air or remaining in the effluent, the biological treatment unit may be used to comply with the applicable treatment requirements without the unit being covered and vented through a closed vent system to an air pollution control device.

The determination of F_{bio} shall be made on a system as it would exist under the rule. The owner or operator should anticipate changes that would occur to the wastewater flow and concentration of organics, to be treated by the biological treatment unit, as a result of enclosing the collection and treatment system as required by the rule.

Unless otherwise specified, the procedures presented in this appendix are designed to be applied to thoroughly mixed treatment units. A thoroughly mixed treatment unit is a unit that is designed and operated to approach or achieve uniform biomass distribution and organic compound concentration throughout the aeration unit by quickly dispersing the recycled biomass and the wastewater entering the unit. Detailed discussion on how to determine if a biological treatment unit is thoroughly mixed can be found in reference 7. Systems that are not thoroughly mixed treatment units should be subdivided into a series of zones that have uniform characteristics within each zone. The number of zones required to characterize a biological treatment system will depend on the design and operation of the treatment system. Detailed discussion on how to determine the number of zones in a biological treatment unit and examples of determination of f_{bio} can be found in reference 8. Each zone should then be modeled as a separate unit. The amount of air emissions and biodegradation from the modeling of these separate zones can then be added to reflect the entire system.

II. Definitions

Biological treatment unit = wastewater treatment unit designed and operated to promote the growth of bacteria to destroy organic materials in wastewater.

f_{bio} = The fraction of individual applicable organic compounds in the wastewater biodegraded in a biological treatment unit.

F_{bio} = The fraction of total applicable organic compounds in the wastewater biodegraded in a biological treatment unit.

Fe = The fraction of applicable organic compounds emitted from the wastewater to the atmosphere.

K1 = First order biodegradation rate constant, L/g MLVSS-hr

KL = liquid-phase mass transfer coefficient, m/s

M = compound specific mass flow weighted average of organic compounds in the wastewater, Mg/Yr

III. Procedures for Determination of f_{bio}

The first step in the analysis to determine if a biological treatment unit may be used without being covered and vented through a closed-vent system to an air pollution control device is to determine the compound-specific $f_{bio.}$ The following procedures may be used to determine f_{bio}:

(1) The EPA Test Method 304A or 304B (appendix A, part 63)—Method for the Determination of Biodegradation Rates of Organic Compounds,

(2) Performance data with and without biodegradation,

(3) Inlet and outlet concentration measurements,

(4) Batch tests,

(5) Multiple zone concentration measurements.

All procedures must be executed so that the resulting f_{bio} is based on the collection system and waste management units being in compliance with the rule. If the collection system and waste management units meet

the suppression requirements at the time of the test, any of the procedures may be chosen. If the collection system and waste management units are not in compliance at the time of the performance test, then only Method 304A, B, or the batch test shall be chosen. If Method 304A, B, or the batch test is used, any anticipated changes to the influent of the full-scale biological treatment unit that will occur after the facility has enclosed the collection system must be represented in the influent feed to the benchtop bioreactor unit, or test unit.

Select one or more appropriate procedures from the five listed above based on the availability of site specific data and the type of mixing that occurs in the unit (thoroughly mixed or multiple mixing zone). If the facility does not have site-specific data on the removal efficiency of its biological treatment unit, then Procedure 1 or Procedure 4 may be used. Procedure 1 allows the use of a benchtop bioreactor to determine the first-order biodegradation rate constant. An owner or operator may elect to assume the first order biodegradation rate constant is zero for any regulated compound(s) present in the wastewater. Procedure 4 explains two types of batch tests which may be used to estimate the first order biodegradation rate constant. An owner or operator may elect to assume the first order biodegradation rate constant is zero for any regulated compound(s) present in the wastewater. Procedure 3 would be used if the facility has, or measures to determine, data on the inlet and outlet individual organic compound concentration for the biological treatment unit. Procedure 3 may only be used on a thoroughly mixed treatment unit. Procedure 5 is the concentration measurement test that can be used for units with multiple mixing zones. Procedure 2 is used if a facility has or obtains performance data on a biotreatment unit prior to and after addition of the microbial mass. An example where Procedure 2 could be used is an activated sludge unit where measurements have been taken on inlet and exit concentration of organic compounds in the wastewater prior to seeding with the microbial mass and startup of the unit. The flow chart in figure 1 outlines the steps to use for each of the procedures.

A. Method 304A or 304B (Procedure 1)

If the first procedure is selected, follow the instructions in appendix A of part 63 Method 304A ''Method for the Determination of Biodegradation Rates of Organic Compounds (Vented Option)'' or Method 304B ''Method for the Determination of Biodegradation Rates of Organic Compounds (Scrubber Option).'' Method 304A or 304B provides instruction on setting up and operating a self-contained benchtop bioreactor system which is operated under conditions representative of the target full-scale system. Method 304A uses a benchtop bioreactor system with a vent, and uses modeling to estimate any air emissions. Method 304B uses a benchtop bioreactor system which is equipped with a scrubber and is not vented.

There are some restrictions on which method a source may use. If the facility is measuring the rate of biodegradation of compounds that may tend to react or hydrolyze in the scrubber of Method 304B, this method shall not be used and Method 304A is the required method. If a Henry's law value is not available to use with Form V, then Method 304A shall not be used and Method 304B is the required method. When using either method, the feed flow to the benchtop bioreactor shall be representative of the flow and concentration of the wastewater that will be treated by the full-scale biological treatment unit after the collection and treatment system has been enclosed as required under the applicable subpart.

The conditions under which the full-scale biological treatment unit is run establish the operating parameters of Method 304A or 304B. If the biological treatment unit is operated under abnormal operating conditions (conditions outside the range of critical parameters examined and confirmed in the laboratory), the EPA believes this will adversely affect the biodegradation rate and is an unacceptable treatment option. The facility would be making multiple runs of the test method to simulate the operating range for its biological treatment unit. For wide ranges of variation in operating parameters, the facility shall demonstrate the biological treatment unit is achieving an acceptable level of control, as required by the regulation, across the ranges and not only at the endpoints.

If Method 304A is used, complete Form V initially. Form V is used to calculate K1 from the Method 304A results. Form V uses the Henry's law constant to estimate the fraction lost from the benchtop reactor vent. The owner or operator shall use the Henry's law values in Table I. Form V also gives direction for calculating an equivalent KL. Note on Form V if the calculated number for line 11 is greater than the calculated value for line 13, this procedure shall not be used to demonstrate the compound is biodegradable. If line 11 is greater than line 13, this is an indication the fraction emitted from the vent is greater than the fraction biodegraded. The equivalent KL determined on Form V is used in Form II (line 6). Estimation of the Fe and f_{bio} must be done following the steps in Form III. Form III uses the previously calculated values of K1 and KL (equivalent KL), and site-specific parameters of the full-scale bioreactor as input to the calculations. Forms II, III, and V must be completed for each organic compound in the wastewater to determine Fe and $f_{bio.}$

If Method 304B is used, perform the method and use the measurements to determine K1, which is the first-order biodegradation rate constant. Form I lists the sequence of steps in the procedure for calculating K1 from the Method 304B results. Once K1 is determined, KL must be calculated by use of mass transfer equations. Form II outlines the procedure to follow for use of mass transfer equations to determine KL. A computer program which incorporates these mass transfer equations may be used. Water7 is a program that incorporates these mass transfer equations and may be used to determine KL. Refer to Form II–A to determine KL, if Water7 or the most recent update to this model is used. In addition, the Bay Area Sewage Toxics Emission (BASTE) model version 3.0 or equivalent upgrade and the TOXCHEM (Environment Canada's Wastewater Technology Centre and Environmega, Ltd.) model version 1.10 or equivalent upgrade may also be used to determine KL for the biological treatment unit with several stipulations. The programs must be altered to output a KL value which is based on the site-specific parameters of the unit modeled, and the Henry's law values listed in Table I must be substituted for the existing Henry's law values in the programs. Input values used in the model and corresponding output values shall become documentation of the f_{bio} determination. The owner or operator should be aware these programs do not allow modeling of certain units. To model these units, the owner or operator shall use one of the other appropriate procedures as outlined in this appendix. The owner or operator shall not use a default value for KL. The KL value determined by use of these models shall be based on the site-specific parameters of the specific unit. This KL value shall be inserted in Form II (line 6). Estimation of the Fe and f_{bio} must be done following the steps in Form III. Form III uses the previously calculated values of K1 and KL, and site-specific parameters of the full-scale bioreactor as input to the calculations. Forms I, II, and III must be completed for each organic compound in the wastewater to determine Fe and $f_{bio.}$

B. Performance Data With and Without Biodegradation (Procedure 2)

Procedure 2 uses site-specific performance data that represents or characterizes operation of the unit both with and without biodegradation. As previously mentioned, proper determination of f_{bio} must be made on a system as it would exist under the rule. Using Form IV, calculate KL and K1. After KL and K1 are determined, Form III is used to calculate Fe and f_{bio} for each organic compound present in the wastewater.

C. Inlet and Outlet Concentration Measurements (Procedure 3)

Procedure 3 uses measured inlet and outlet organic compound concentrations for the unit. This procedure may only be used on a thoroughly mixed treatment unit. Again, proper determination of f_{bio} must be made on a system as it would exist under the rule. The first step in using this procedure is to calculate KL using Form II. A computer model may be used. If the Water7 model or the most recent update to this model is used, then use Form II–A to calculate KL. After KL is determined using field data, complete Form VI to calculate K1. The TOXCHEM or BASTE model may also be used to calculate KL for the biological treatment unit, with the stipulations listed in procedure 304B. After KL and K1 are determined, Form III is used to calculate Fe and f_{bio} for each organic compound.

D. Batch Tests (Procedure 4)

Two types of batch tests which may be used to determine kinetic parameters are: (1) The aerated reactor test and (2) the sealed reactor test. The aerated reactor test is also known as the BOX test (batch test with oxygen addition). The sealed reactor test is also known as the serum bottle test. These batch tests should be conducted only by persons familiar with procedures for determining biodegradation kinetics. Detailed discussions of batch procedures for determining biodegradation kinetic parameters can be found in references 1–4.

For both batch test approaches, a biomass sample from the activated sludge unit of interest is collected, aerated, and stored for no more than 4 hours prior to testing. To collect sufficient data when biodegradation is rapid, it may be necessary to dilute the biomass sample. If the sample is to be diluted, the biomass sample shall be diluted using treated effluent from the activated sludge unit of interest to a concentration such that the biodegradation test will last long enough to make at least six concentration measurements. It is recommended that the tests not be terminated until the compound concentration falls below the limit of quantitation (LOQ). Measurements that are below the LOQ should not be used in the data analysis. Biomass concentrations shall be determined using standard methods for measurement of mixed liquor volatile suspended solids (MLVSS) (reference 5).

The change in concentration of a test compound may be monitored by either measuring the concentration in the liquid or in the reactor headspace. The analytical technique chosen for the test should be as sensitive as possible. For the batch test procedures described in this section, equilibrium conditions must exist between the liquid and gas phases of the experiments because the

data analysis procedures are based on this premise. To use the headspace sampling approach, the reactor headspace must be in equilibrium with the liquid so that the headspace concentrations can be correlated with the liquid concentrations. Before the biodegradation testing is conducted, the equilibrium assumption must be verified. A discussion of the equilibrium assumption verification is given below in sections D.1 and D.2 since different approaches are required for the two types of batch tests.

To determine biodegradation kinetic parameters in a batch test, it is important to choose an appropriate initial substrate (compound(s) of interest) concentration for the test. The outcome of the batch experiment may be influenced by the initial substrate (S_O) to biomass (X_O) ratio (see references 3, 4, and 6). This ratio is typically measured in chemical oxygen demand (COD) units. When the S_O/X_O ratio is low, cell multiplication and growth in the batch test is negligible and the kinetics measured by the test are representative of the kinetics in the activated sludge unit of interest. The S_O/X_O ratio for a batch test is determined with the following equation:

$$\frac{S_0}{X_0} = \frac{S_i}{1.42\ X} \quad \text{(Eqn App. C} - 1)$$

Where:

S_O/X_O=initial substrate to biomass ratio on a COD basis

S_i=initial substrate concentration in COD units (g COD/L)

X=biomass concentration in the batch test (g MLVSS/L)

1.42 = Conversion factor to convert to COD units

For the batch tests described in this section, the S_O/X_O ratio (on a COD basis) must be initially less than 0.5.

1. *Aerated Reactor Test*. An aerated draft tube reactor may be used for the biokinetics testing (as an example see Figure 2 of appendix C). Other aerated reactor configurations may also be used. Air is bubbled through a porous frit at a rate sufficient to aerate and keep the reactor uniformly mixed. Aeration rates typically vary from 50 to 200 ml/min for a 1 liter system. A mass flow rate controller is used to carefully control the air flow rate because it is important to have an accurate measure of this rate. The dissolved oxygen (DO) concentration in the system must not fall below 2 mg/liter so that the biodegradation observed will not be DO-limited. Once the air flow rate is established, the test mixture (or compound) of interest is then injected into the reactor and the concentration of the compound(s) is monitored over time. Concentrations may be monitored in the liquid or in the headspace. A minimum of six samples shall be taken over the period of the test. However, it is necessary to collect samples until the compound concentration falls below the LOQ. If liquid samples are collected, they must be small enough such that the liquid volume in the batch reactor does not change by more than 10%.

Before conducting experiments with biomass, it is necessary to verify the equilibrium assumption. The equilibrium assumption can be verified by conducting a stripping experiment using the effluent (no biomass) from the activated sludge unit of interest. Effluent is filtered with a 0.45 um or smaller filter and placed in the draft tube reactor. Air is sparged into the system and the compound concentration in the liquid or headspace is monitored over time. This test with no biomass may provide an estimate of the Henry's law constant. If the system is at equilibrium, the Henry's law constant may be estimated with the following equation:

$$-\ln\left(C / C_0\right) = \left(GK_{eq} / V\right)t \qquad \text{(Eqn App. C} - 2)$$

Where:

C=cencentration at time, t (min)

C_O=concentration at t=0

G=volumetric gas flow rate (ml/min)

V=liquid volume in the batch reactor (ml)

K_{eq}=Henry's law constant (mg/L-gas)/(mg/L-liquid)

t=time (min)

A plot of—ln(C/C_o) as a function of t will have a slope equal to GK_{eq}/V. The equilibrium assumption can be verified by comparing the experimentally determined K_{eq} for the system to literature values of the Henry's Law constant (including those listed in this appendix). If K_{eq} does not match the Henry's law constant, K_{eq} shall be determined from analysis of the headspace and liquid concentration in a batch system.

The concentration of a compound decreases in the bioreactor due to both biodegradation and stripping. Biodegradation processes are typically described with a Monod model. This model and a stripping expression are combined to give a mass balance for the aerated draft tube reactor):

$$-\frac{ds}{dt}=\left(\frac{GK_{eq}}{V}\right)s+\left(\frac{Q_m X}{K_s+s}\right)s \qquad \text{(Eqn App. C}-3\text{)}$$

Where:

s=test compound concentration, mg/liter
G=volumetric gas flow rate, liters/hr
K_{eq}=Henry's Law constant measured in the system, (mg/liter gas)/(mg/liter liquid)
V=volume of liquid in the reactor, liters
X=biomass concentration (g MLVSS/liter)
Q_m=maximum rate of substrate removal, mg/g MLVSS/hr
K_S=Monod biorate constant at half the maximum rate, mg/liter

Equation App. C–3 can be integrated to obtain the following equation:

$$-t=\frac{VK_s}{A}\ln\left(\frac{s}{s_0}\right)+\frac{Q_m XV^2}{AB}\ln\left(\frac{A+Bs}{A+Bs_0}\right) \qquad \text{(Eqn App. C-4)}$$

Where:

$A=GK_{eq}K_s + Q_m VX$
$B=GK_{eq}$
S_o=test compound concentration at t=0

This equation is used along with the substrate concentration versus time data to determine the best fit parameters (Q_m and K_S) to describe the biodegradation process in the aerated reactor. If the aerated reactor test is used, the following procedure is used to analyze the data. Evaluate K_{eq} for the compound of interest with Form XI. The concentration in the vented headspace or liquid is measured as a function of time and the data is entered on Form XI. A plot is made from the data and attached to the Form XI. K_{eq} is calculated on Form XI and the results are contrasted with the expected value of Henry's law obtained from Form IX. If the comparison is satisfactory, the stripping constant is calculated from K_{eq}, completing Form XI. The values of K_{eq} may differ because the theoretical value of K_{eq} may not be applicable to the system of interest. If the comparison of the calculated K_{eq} from the form and the expected value of Henry's law is unsatisfactory, Form X can alternatively be used to validate $K_{eq.}$ If the aerated reactor is demonstrated to not be at equilibrium, either modify the reactor design and/or operation, or use another type of batch test.

The compound-specific biorate constants are then measured using Form XII. The stripping constant that was determined from Form XI and a headspace correction factor of 1 are entered on Form XII. The aerated reactor biotest may then be run, measuring concentrations of each compound of interest as a function of time. If headspace concentrations are measured instead of liquid concentrations, then the corresponding liquid concentrations are calculated from the headspace measurements using the K_{eq} determined on Form XI and entered on Form XII.

The concentration data on Form XII may contain scatter that can adversely influence the data interpretation. It is possible to curve fit the concentration data and enter the concentrations on the fitted curve instead of the actual data. If curve fitting is used, the curve-fitting procedure must be based upon the Equation App. C–4. When curve fitting is used, it is necessary to attach a plot of the actual data and the fitted curve to Form XII.

If the stripping rate constant is relatively large when compared to the biorate at low concentrations, it may be difficult to obtain accurate evaluations of the first-order biorate constant. In these cases, either reducing the stripping rate constant by lowering the aeration rate, or increasing the biomass concentrations should be considered.

The final result of the batch testing is the measurement of a biorate that can be used to estimate the fraction biodegraded, $f_{bio.}$ The number transferred to Form III is obtained from Form XII, line 9.

2. *Sealed Reactor Test*. This test uses a closed system to prevent losses of the test compound by volatilization. This test may be conducted using a serum bottle or a sealed draft tube reactor (for an example see Figure 3 of appendix C). Since no air is supplied, it is necessary to ensure that sufficient oxygen is present in the system. The DO concentration in the system must not fall below 2 mg/liter so that the biodegradation observed will not be DO-limited. As an

alternative, oxygen may be supplied by electrolysis as needed to maintain the DO concentration above 2 mg/liter. The reactor contents must be uniformly mixed, by stirring or agitation using a shaker or similar apparatus. The test mixture (or compound) of interest is injected into the reactor and the concentration is monitored over time. A minimum of six samples shall be taken over the period of the test. However, it is necessary to monitor the concentration until it falls below the LOQ.

The equilibrium assumption must be verified for the batch reactor system. In this case, K_{eq} may be determined by simultaneously measuring gas and liquid phase concentrations at different times within a given experiment. A constant ratio of gas/liquid concentrations indicates that equilibrium conditions are present and K_{eq} is not a function of concentration. This ratio is then taken as the K_{eq} for the specific compound in the test. It is not necessary to measure K_{eq} for each experiment. If the ratio is not constant, the equilibrium assumption is not valid and it is necessary to (1) increase mixing energy for the system and retest for the equilibrium assumption, or (2) use a different type of test (for example, a collapsible volume reactor).

The concentration of a compound decreases in the bioreactor due to biodegradation according to Equation App. C–5:

$$\frac{ds}{dt} = \left[\frac{-V_1}{V_g K_{eq} + V_1}\right]\left[\left(\frac{Q_m X}{K_s + s}\right)s\right] \qquad \text{(Eqn App. C} - 5\text{)}$$

Where:

s=test compound concentration (mg/liters)

V_l=the average liquid volume in the reactor (liters)

V_g=the average gas volume in the reactor (liters)

Q_m=maximum rate of substrate removal (mg/g *ML* VSS/hr)

K_{eq}=Henry's Law constant determined for the test, (mg/liter gas)/(mg/liter liquid)

K_s=Monod biorate constant at one-half the maximum rate (mg/liter)

t=time (hours)

X=biomass concentration (g *ML* VSS/liter)

s_o=test compound concentration at time t=0

Equation App. C–5 can be solved analytically to give:

$$t = \frac{-\left(V_g K_{eq} + V_1\right)}{V_1 Q_m X}\left[\left(s - s_0\right) + K_s \ln\left(\frac{s}{s_0}\right)\right] \qquad \text{(Eqn App. C-6)}$$

This equation is used along with the substrate concentration versus time data to determine the best fit parameters (Q_m and K_s) to describe the biodegradation process in the sealed reactor.

If the sealed reactor test is used, Form X is used to determine the headspace correction factor. The disappearance of a compound in the sealed reactor test is slowed because a fraction of the compound is not available for biodegradation because it is present in the headspace. If the compound is almost entirely in the liquid phase, the headspace correction factor is approximately one. If the headspace correction factor is substantially less than one, improved mass transfer or reduced headspace may improve the accuracy of the sealed reactor test. A preliminary sealed reactor test must be conducted to test the equilibrium assumption. As the compound of interest is degraded, simultaneous headspace and liquid samples should be collected and Form X should be used to evaluate $K_{eq.}$ The ratio of headspace to liquid concentrations must be constant in order to confirm that equilibrium conditions exist. If equilibrium conditions are not present, additional mixing or an alternate reactor configuration may be required.

The compound-specific biorate constants are then calculated using Form XII. For the sealed reactor test, a stripping rate constant of zero and the headspace correction factor that was determined from Form X are entered on Form XII. The sealed reactor test may then be run, measuring the concentrations of each compound of interest as a function of time. If headspace concentrations are measured instead of liquid concentrations, then the corresponding liquid concentrations

are calculated from the headspace measurements using K_{eq} from Form X and entered on Form XII.

The concentration data on Form XII may contain scatter that can adversely influence the data interpretation. It is possible to curve fit the concentration data and enter the concentrations on the fitted curve instead of the actual data. If curve fitting is used, the curve-fitting procedure must be based upon Equation App. C–6. When curve fitting is used, it is necessary to attach a plot of the actual data and the fitted curve to Form XII.

If a sealed collapsible reactor is used that has no headspace, the headspace correction factor will equal 1, but the stripping rate constant may not equal 0 due to diffusion losses through the reactor wall. The ratio of the rate of loss of compound to the concentration of the compound in the reactor (units of per hour) must be evaluated. This loss ratio has the same units as the stripping rate constant and may be entered as the stripping rate constant on line 1 of Form XII.

If the loss due to diffusion through the walls of the collapsible reactor is relatively large when compared to the biorate at low concentrations, it may be difficult to obtain accurate evaluations of the first-order biorate constant. In these cases, either replacing the materials used to construct the reactor with materials of low permeability or increasing the biomass concentration should be considered.

The final result of the batch testing is the measurement of a biorate that can be used to estimate the fraction biodegraded, $f_{bio.}$ The number transferred to Form III is obtained from Form XII, line 9.

The number on Form XII line 9 will equal the Monod first-order biorate constant if the full-scale system is operated in the first-order range. If the full-scale system is operated at concentrations above that of the Monod first-order range, the value of the number on line 9 will be somewhat lower than the Monod first-order biorate constant. With supporting biorate data, the Monod model used in Form XII may be used to estimate the effective biorate constant K1 for use in Form III.

If a reactor with headspace is used, analysis of the data using equation App. C–6 is valid only if V_l and V_g do not change more than 10% (i.e., they can be approximated as constant for the duration of the test). Since biodegradation is occurring only in the liquid, as the liquid concentration decreases it is necessary for mass to transfer from the gas to the liquid phase. This may require vigorous mixing and/or reducing the volume in the headspace of the reactor.

If there is no headspace (e.g., a collapsible reactor), equation App. C–6 is independent of V_1 and there are no restrictions on the liquid volume. If a membrane or bag is used as the collapsible-volume reactor, it may be important to monitor for diffusion losses in the system. To determine if there are losses, the bag should be used without biomass and spiked with the compound(s) of interest. The concentration of the compound(s) in the reactor should be monitored over time. The data are analyzed as described above for the sealed reactor test.

3. *Quality Control/Quality Assurance (QA/QC).* A QA/QC plan outlining the procedures used to determine the biodegradation rate constants shall be prepared and a copy maintained at the source. The plan should include, but may not be limited to:

1. A description of the apparatus used (e.g., size, volume, method of supplying air or oxygen, mixing, and sampling procedures) including a simplified schematic drawing.
2. A description of how biomass was sampled from the activated sludge unit.
3. A description of how biomass was held prior to testing (age, etc.).
4. A description of what conditions (DO, gas-liquid equilibrium, temperature, etc.) are important, what the target values are, how the factors were controlled, and how well they were controlled.
5. A description of how the experiment was conducted, including preparation of solutions, dilution procedures, sampling procedures, monitoring of conditions, etc.
6. A description of the analytical instrumentation used, how the instruments were calibrated, and a summary of the precision for that equipment.
7. A description of the analytical procedures used. If appropriate, reference to an ASTM, EPA or other procedure may be used. Otherwise, describe how the procedure is done, what is done to measure precision, accuracy, recovery, etc., as appropriate.
8. A description of how data are captured, recorded, and stored.
9. A description of the equations used and their solutions, including a reference to any software used for calculations and/or curve-fitting.

E. Multiple Zone Concentration Measurements (Procedure 5)

Procedure 5 is the concentration measurement method that can be used to determine the f_{bio} for units that are not thoroughly mixed and thus have multiple zones of mixing. As with the other procedures, proper determination of f_{bio} must be made on a system as it would exist under the rule. For purposes of this calculation, the biological unit must be divided[1] into zones with uniform characteristics within each zone. The number of zones that is used depends on the complexity

[1] This is a mathematical division of the actual unit; not addition of physical barriers.

of the unit. Reference 8, ''Technical Support Document for the Evaluation of Aerobic Biological Treatment Units with Multiple Mixing Zones,'' is a source for further information concerning how to determine the number of zones that should be used for evaluating your unit. The following information on the biological unit must be available to use this procedure: basic unit variables such as inlet and recycle wastewater flow rates, type of agitation, and operating conditions; measured representative organic compound concentrations in each zone and the inlet and outlet; and estimated mass transfer coefficients for each zone.

Reference 8 ''Technical Support Document for the Evaluation of Aerobic Biological Treatment Units with Multiple Mixing Zones,'' is a source for further information concerning how to interpolate the biorates for multiple zones. In units with well-characterized concentration measurements obtained in an initial evaluation of the unit, it may be possible to demonstrate that there is a good correlation of the component concentrations with the locations in the multiple-zone unit. With this good correlation, it may be possible to accurately predict the concentrations in selected zones without actually testing each selected zone. This correlation method may be used for units that have many zones (greater than 5) or where one of the interior zones is not readily accessible for sampling. To use this correlation method of estimating zone concentrations, it is necessary to measure the concentrations in the inlet unit, the exit unit, and sufficient interior units to obtain a correlation of component concentrations with the locations. You cannot use this correlation method of estimating selected zone concentrations if monitoring of each zone is required, or if the accuracy and precision of the correlation is inferior to actual individual sampling error. The accuracy and precision of the correlation may be improved by increasing the number of locations tested. Because the correlation is based on many samples, it should provide an accurate representation of a stable operating system.

The estimated mass transfer coefficient for each compound in each zone is obtained from Form II using the characteristics of each zone. A computer model may be used. If the Water7 model or the most recent update to this model is used, then use Form II–A to calculate KL. The TOXCHEM or BASTE model may also be used to calculate KL for the biological treatment unit, with the stipulations listed in Procedure 304B. Compound concentration measurements for each zone are used in Form XIII to calculate the $f_{bio.}$ A copy of Form XIII is completed for each of the compounds of concern treated in the biological unit.

IV. Calculation of F_{bio}

At this point, the individual f_{bios} determined by the previously explained procedures must be summed to obtain the total $F_{bio.}$ To determine the F_{bio} multiply each compound specific f_{bio} by the compound-specific average mass flow rate of the organic compound in the wastewater stream (see regulation for instruction on calculation of average mass flow rate). Sum these products and divide by the total wastewater stream average mass flow rate of organic compounds.

$$F_{bio} = \frac{\sum_{i=1}^{N}\left(f_{bio}i \times M_i\right)}{\sum_{i=1}^{n} M_i} \qquad \left(\text{Eqn App. C} - 7\right)$$

M=compound specific average mass flow rate of the organic compounds in the wastewater (Mg/Yr)

n=number of organic compounds in the wastewater

The F_{bio} is then used in the applicable compliance equations in the regulation to determine if biodegradation may be used to comply with the treatment standard without covering and venting to an air pollution control device.

References

1. Rajagopalan, S. et al. ''Comparison of Methods for Determining Biodegradation Kinetics of Volatile Organic Compounds.'' Proceedings of Water Environment Federation. 67th Annual Conference, October 15–19, 1994.

2. Ellis, T.G. et al. ''Determination of Toxic Organic Chemical Biodegradation Kinetics Using Novel Respirometric Technique''. Proceedings Water Environment Federation, 67th Annual Conference, October 15–19, 1994.

3. Pitter, P. and J. Chudoba. Biodegradability of Organic Substances in

the Aquatic Environment. CRC Press, Boca Raton, FL. 1990.

4. Grady, C.P.L., B. Smets, and D. Barbeau. Variability in kinetic parameter estimates: A review of possible causes and a proposed terminology. Wat. Res. 30 (3), 742–748, 1996.

5. Eaton, A.D., et al. eds., Standard Methods for the Examination of Water and Wastewater, 19th Edition, American Public Health Association, Washington, DC, 1995.

6. Chudoba P., B. Capdeville, and J. Chudoba. Explanation of biological meaning of the So/Xo ratio in batch cultivation. Wat. Sci. Tech. 26 (3/4), 743–751, 1992.

7. Technical Support Document for Evaluation of Thoroughly Mixed Biological Treatment Units. November 1998.

8. Technical Support Document for the Evaluation of Aerobic Biological Treatment Units with Multiple Mixing Zones. July 1999.

TABLE I

Compound	H_L @ 25 °C (atm/mole frac)	H_L @ 100 °C (atm/mole frac)
1 Acetaldehyde	4.87e+00	5.64e+01
3 Acetonitrile	1.11e+00	1.78e+01
4 Acetophenone	5.09e−01	2.25e+01
5 Acrolein	4.57e+00	6.61e+01
8 Acrylonitrile	5.45e+00	6.67e+01
9 Allyl chloride	5.15e+02	2.26e+03
10 Aniline	9.78e−02	1.42e+00
12 Benzene	3.08e+02	1.93e+03
14 Benzyl chloride	1.77e+01	2.88e+02
15 Biphenyl	2.27e+01	1.27e+03
17 Bromoform	2.96e+01	3.98e+02
18 1,3-Butadiene	3.96e+03	1.56e+04
20 Carbon disulfide	1.06e+03	3.60e+03
21 Carbon tetrachloride	1.68e+03	1.69e+04
23 2-Chloroacetophenone	4.84e−02	1.43e+01
24 Chlorobenzene	2.09e+02	3.12e+03
25 Chloroform	2.21e+02	1.34e+03
26 Chloroprene	5.16e+01	1.74e+02
29 o-Cresol	9.12e−02	2.44e+01
31 Cumene	7.28e+02	7.15e+03
32 1,4-Dichlorobenzene(p)	1.76e+02	1.95e+03
33 Dichloroethyl ether	1.14e+00	3.57e+01
34 1,3-Dichloropropene	1.97e+02	1.44e+03
36 N,N-Dimethylaniline	7.70e−01	5.67e+02
37 Diethyl sulfate	3.41e−01	4.22e+01
38 3,3'-Dimethylbenzidine	7.51e−05	5.09e−01
40 1,1-Dimethylhydrazine	9.11e−02	1.57e+01
42 Dimethyl sulfate	2.23e−01	1.43e+01
43 2,4-Dinitrophenol	2.84e−01	1.50e+02
44 2,4-Dinitrotoluene	4.00e−01	9.62e+00
45 1,4-Dioxane	3.08e−01	9.53e+00
47 Epichlorohydrin	1.86e+00	4.34e+01
48 Ethyl acrylate	1.41e+01	3.01e+02
49 Ethylbenzene	4.38e+02	4.27e+03
50 Ethyl chloride (chloroethane)	6.72e+02	3.10e+03
51 Ethylene dibromide	3.61e+01	5.15e+02
52 Ethylene dichloride (1,2-Dichloroethane)	6.54e+01	5.06e+02
54 Ethylene oxide	1.32e+01	9.09e+01
55 Ethylidene dichloride (1,1-Dichloroethane)	3.12e+02	2.92e+03
57 Ethylene glycol dimethyl ether	1.95e+00	4.12e+01
60 Ethylene glycol monoethyl ether acetate	9.86e−02	6.03e+00
62 Ethylene glycol monomethyl ether acetate	1.22e−01	6.93e+00
64 Diethylene glycol dimethyl ether	8.38e−02	4.69e+00
69 Diethylene glycol diethyl ether	1.19e−01	7.71e+00
72 Ethylene glycol monobutyl ether acetate	2.75e−01	2.50e+01
73 Hexachlorobenzene	9.45e+01	2.57e+04
74 Hexachlorobutadiene	5.72e+02	6.92e+03
75 Hexachloroethane	4.64e+02	7.49e+04
76 Hexane	4.27e+04	9.44e+04
78 Isophorone	3.68e−01	1.68e+01
80 Methanol	2.89e−01	7.73e+00
81 Methyl bromide (Bromomethane)	3.81e+02	2.12e+03
82 Methyl chloride (Chloromethane)	4.90e+02	2.84e+03
83 Methyl chloroform (1,1,1-Trichloroethane)	9.67e+02	5.73e+03
84 Methyl ethyl ketone (2-Butanone)	7.22e+00	5.92e+01
86 Methyl isobutyl ketone (Hexone)	2.17e+01	3.72e+02
88 Methyl methacrylate	7.83e+00	9.15e+01
89 Methyl tert-butyl ether	3.08e+01	2.67e+02

TABLE I—Continued

Compound	H_L @ 25 °C (atm/mole frac)	H_L @ 100 °C (atm/mole frac)
90 Methylene chloride (Dichloromethane)	1.64e+02	9.15e+02
93 Naphthalene	2.68e+01	7.10e+02
94 Nitrobenzene	1.33e+00	2.80e+01
96 2-Nitropropane	6.61e+00	8.76e+01
99 Phosgene	7.80e+02	3.51e+03
102 Propionaldehyde	3.32e+00	1.42e+02
103 Propylene dichloride	1.59e+02	1.27e+03
104 Propylene oxide	1.98e+01	1.84e+02
106 Styrene	1.45e+02	1.72e+03
107 1,1,2,2-Tetrachloroethane	1.39e+01	1.99e+02
108 Tetrachloroethylene (Perchloroethylene)	9.83e+02	1.84e+04
109 Toluene	3.57e+02	2.10e+03
112 o-Toluidine	1.34e−01	1.15e+01
113 1,2,4-Trichlorobenzene	1.07e+02	1.04e+03
114 1,1,2-Trichloroethane	4.58e+01	5.86e+02
115 Trichloroethylene	5.67e+02	7.66e+03
116 2,4,5-Trichlorophenol	4.84e−01	6.27e+01
117 Triethylamine	6.94e+00	2.57e+02
118 2,2,4-Trimethylpentane	1.85e+05	9.74e+05
119 Vinyl acetate	2.82e+01	2.80e+02
120 Vinyl chloride	1.47e+03	6.45e+03
121 Vinylidene chloride (1,1-Dichloroethylene)	1.44e+03	1.40e+04
123 m-Xylene	4.13e+02	3.25e+03
124 o-Xylene	2.71e+02	2.55e+03
125 p-Xylene	4.13e+02	3.20e+03

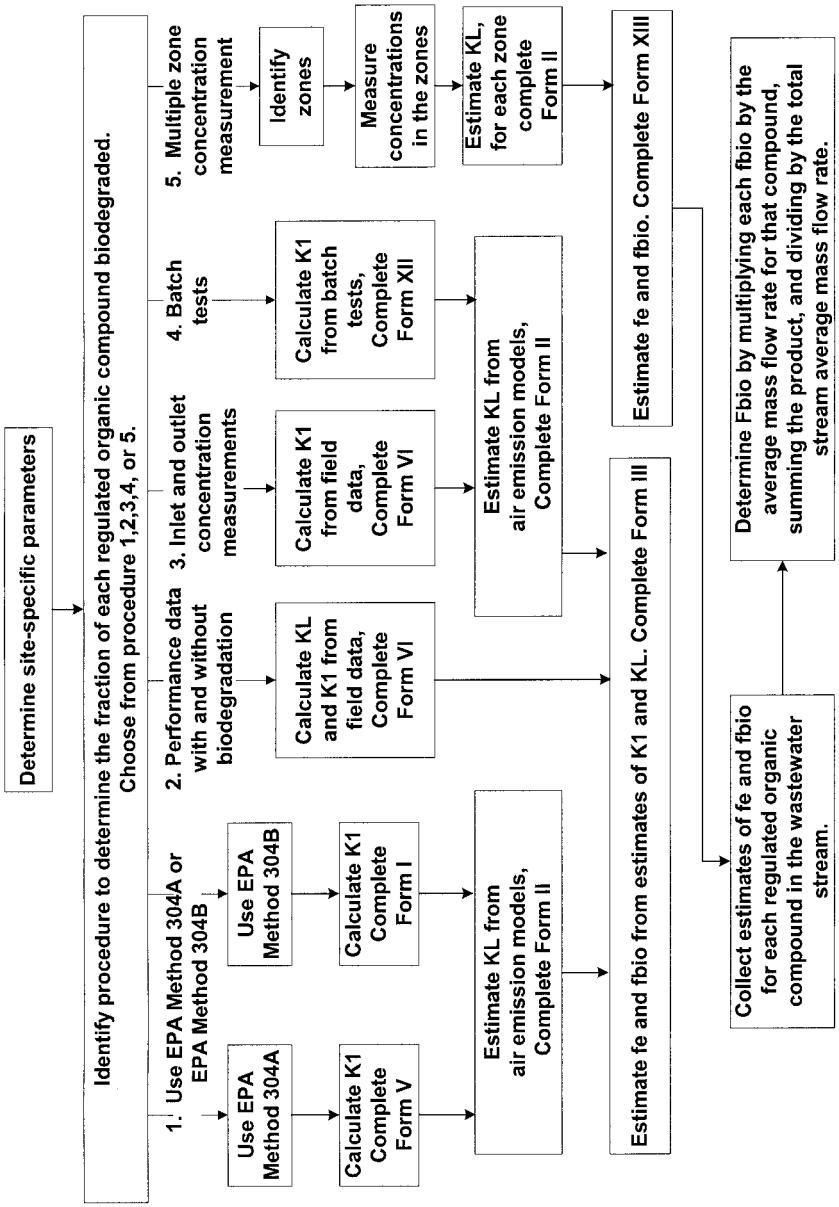

Figure 1. ALTERNATIVE EXPERIMENTAL METHODS FOR DETERMINING THE FRACTION OF ORGANIC COMPOUND BIODEGRADED (Fbio) IN A BIOLOGICAL TREATMENT UNIT

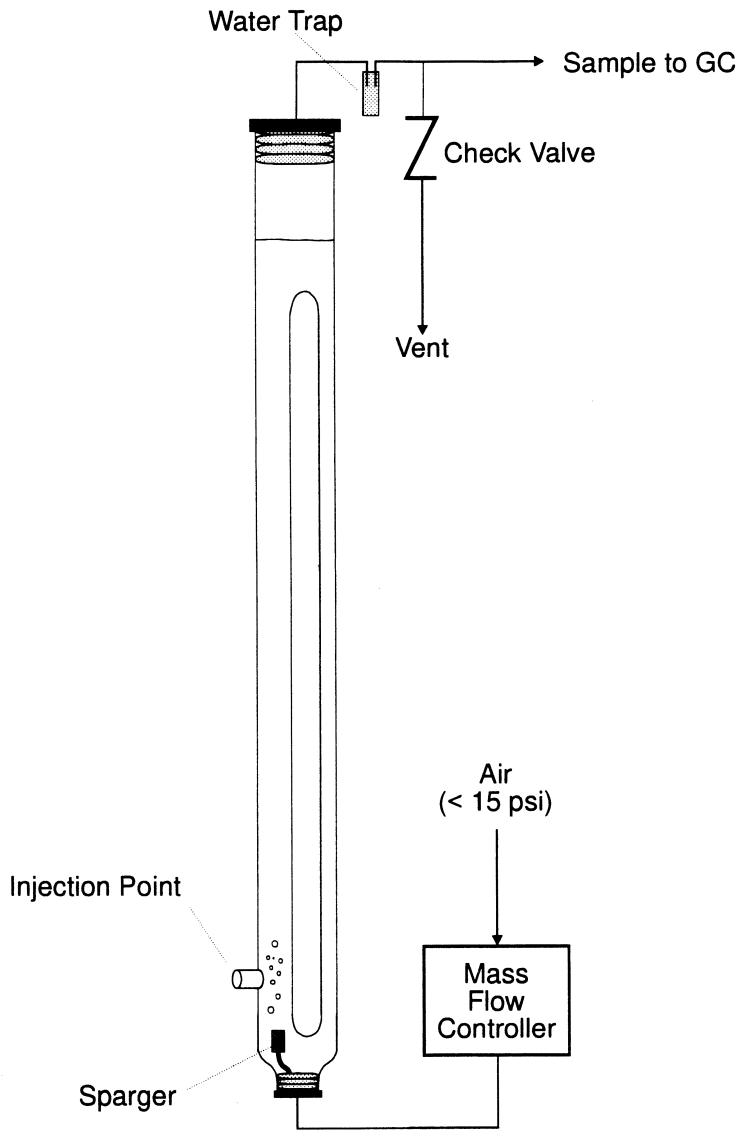

Figure 2. Example Aerated Draft Tube Reactor

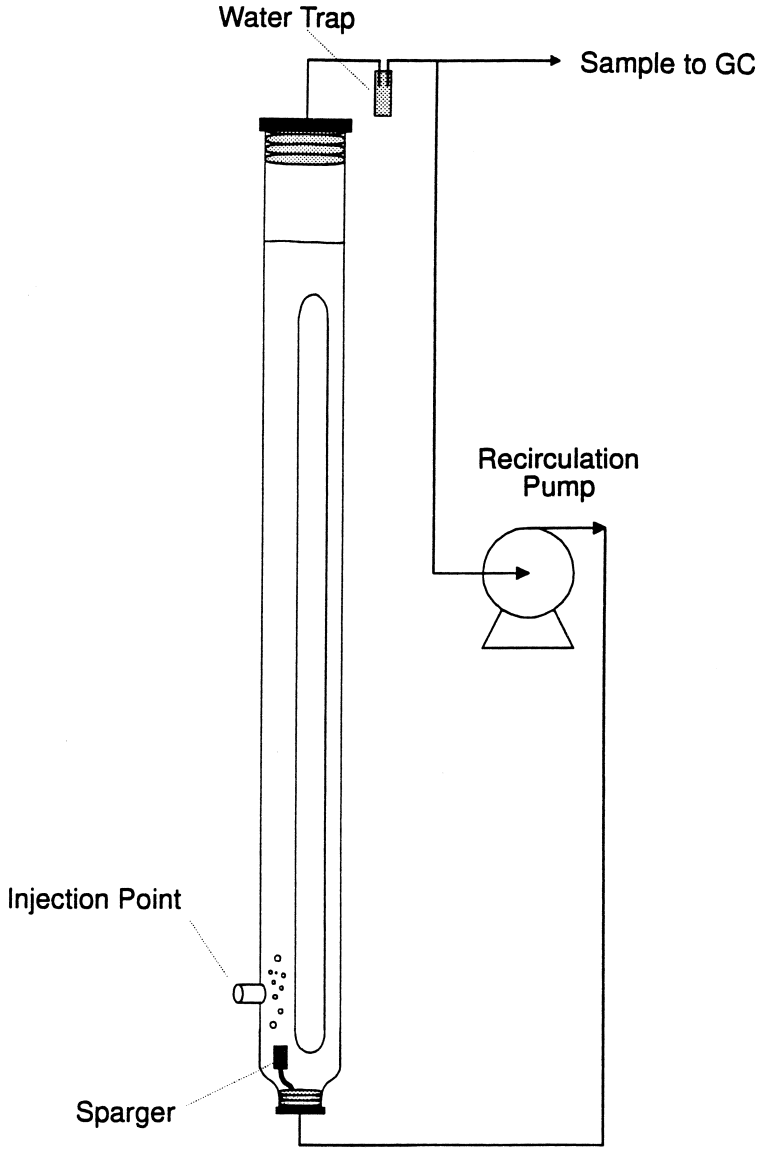

Figure 3. Example Sealed Draft Tube Reactor

Form I DATA FORM FOR THE ESTIMATION OF THE EPA METHOD 304B FIRST ORDER BIORATE CONSTANT			
NAME OF THE FACILITY for site specific biorate determination			Example
COMPOUND for site specific biorate determination			*METHANOL*
INLET CONCENTRATION used in EPA METHOD 304B	1		78
EXIT CONCENTRATION measured by EPA METHOD 304B	2		6
BIOMASS (g/L) This is the dried solids that are obtained from the mixed liquor suspended solids in the bench scale bioreactor.	3		0.075
TEMPERATURE OF BIOREACTOR (deg. C)	4		35
VOLUME of EPA METHOD 304B bench scale bioreactor (L)	5		6
FLOW RATE of waste treated in the bench scale bioreactor (L/hr)	6		0.146
CALCULATIONS FROM EPA METHOD 304B DATA MEASUREMENTS			
RESIDENCE TIME (hr) Divide the number on line 5 by the number on line 6 and enter the results here.	7		41.10
Concentration Decrease (g/m^3). Subtract the number on line 2 from the number on line 1 and enter the results here.	8		72.00
BIORATE (g/m^3-hr). Divide the number on line 8 by the number on line 7 and enter the results here.	9		1.75
Product of concentration and biomass. Multiply the number on line 2 by the number on line 3 and enter the results here.	10		0.45
BIORATE K1 (L/g bio-hr) Divide the number on line 9 by the number on line 10 and enter the results here.	11		3.89
Temperature adjustment. Subtract 25 deg. C from the number on line 4 and enter the results here.	12		10
Temperature adjustment factor. 1.046 is the default temperature adjustment factor. Enter the temperature adjustment factor here.	13		1.046
Biorate temperature ratio. Raise the number on line 13 to the power of the number on line 12.	14		1.567
BIORATE K1 at 25 deg. C (L/g MLVSS-hr) Divide the number on line 11 by the number on line 14 and enter the results here.	15		2.48

Note: With Monod kinetics, use Kmax=1000 to convert the Monod kinetics to first order. If a different temperature adjustment factor than the default is entered on line 13, make sure that the adjustment factor used in the calculations agrees with the value entered on line 13.

Form II	PROCEDURES FORM FOR THE ESTIMATION OF THE KL FROM UNIT SPECIFICATIONS		
NAME OF THE FACILITY for site specific biorate determination			
NAME OF UNIT for site specific biorate determination			
NAME OF COMPOUND			
HENRY'S LAW constant for the compound (mole fraction in gas per mole fraction in water at 25 degrees Celsius)			
IDENTIFY THE TYPE OF UNIT			(check one box below)
	Quiescent impoundment	1	
	Surface agitated impoundment	2	
	Surface agitated impoundment with submerged air	3	
	Unit agitated by submerged aeration gas	4	
	EPA Method 304A, Covered unit, UNOX system, or bench scale reactor	5	

PROCEDURES BASED UPON THE TYPE OF UNIT

UNIT	PROCEDURE TO FOLLOW
1	Use the quiescent impoundment model to determine KL. Use Kq as KL as determined from Form VII.
2	Use the quiescent impoundment model to determine KL for the quiescent zone, Form VII. Use the aerated impoundment model to determine KL for the agitated surface, Form VIII.
3	Use the quiescent impoundment model to determine Kq for the quiescent zone, Form VII. Use the aerated impoundment model to determine KL for the agitated surface, Form VIII. The total system KL is the sum of the KL from Form VIII and the equivalent KL from Form V. Use the submerged air rate as the vent rate in form V.
4	Use the aerated impoundment model to determine KL if the surface is agitated. Use the quiescent impoundment model if the surface is not agitated. KL includes the effect of volatilization in the air discharge. See section 5.6.1 in AIR EMISSIONS MODELS FOR WASTE AND WASTEWATER (EPA-453/R-94-080A). The total system KL is the sum of the KL from Form VIII and the equivalent KL from Form V. Use the submerged air rate as the vent rate in Form V.
5	KL for the surface is assumed to be equal zero. Determine equivalent KL based upon air discharge. Use Form V for EPA Method 304A or if the concentration in the vent is not measured. Use Form V-A if the concentration in the vent is measured.

Estimate of KL obtained from above procedures (m/s)	6	

Form II-A	PROCEDURES FORM FOR THE ESTIMATION OF THE KL FROM WATER 7		
NAME OF THE FACILITY for site specific biorate determination			
NAME OF UNIT for site specific biorate determination			
NAME OF COMPOUND			
HENRY'S LAW COMPOUND			
IDENTIFY THE TYPE OF UNIT			(check one box below)
	Quiescent impoundment	1	
	Surface agitated impoundment	2	
	Surface agitated impoundment with submerged air	3	
	Unit agitated by submerged aeration gas	4	
	Covered unit, UNOX system, bench scale reactor	5	

PROCEDURES BASED UPON THE TYPE OF UNIT

unit	procedure to follow
1	Use the quiescent impoundment model to determine KL.
2	Use the aerated impoundment model to determine KL for the combined agitated surfaces and quiescent surfaces.
3	Use the aerated impoundment model to determine KL for the combined agitated surfaces and quiescent surfaces.
4	Use the aerated impoundment model to determine KL if the surface is agitated. Use the quiescent impoundment model if the surface is not agitated. KL includes the effect of volatilization in the air discharge. See section 5.6.1 in AIR EMISSIONS MODELS FOR WASTE AND WASTEWATER (EPA-453/R-94-080A).
5	KL for the surface is assumed to equal zero. Select the covered unit option with the aerated impoundment model.

Form III DATA FORM FOR THE ESTIMATION OF THE COMPOUND FRACTION BIODEGRADED AND AIR EMISSIONS			
NAME OF THE FACILITY for site specific biorate determination			example
COMPOUND for site specific biorate determination			*methanol*
ESTIMATE OF K1 from Form I line 11, Form V line 15, Form V-A line 15, Form IV line 14, Form VI line 13, or Form XII line 9. (L/g MLVSS-hr)	1		3.89
BIOMASS (g/L) This is the dried solids that are obtained from the mixed liquor suspended solids in the full-scale bioreactor.	2		2.4
VOLUME of full-scale system (cubic meters)	3		2700
AREA of the liquid surface of the full-scale system (square meters)	4		1500
ESTIMATE OF KL from Form II, II-A, IV, V, V-A, or V-B (m/s)	5		0.0000036
FLOW RATE of waste treated in full-scale bioreactor (m^3/s)	6		0.1565
CALCULATIONS FROM ESTIMATES OF K1 AND KL			
BIORATE (m^3/s) Multiply the numbers on lines 1, 2, and 3 together and divide the results by 3600. Enter the results here.	7		7.0020000
AIR STRIPPING (m^3/s). Multiply the numbers on lines 4 and 5 together. Enter the results here.	8		0.0054000
EFFLUENT DISCHARGE (m^3/s). Enter the number on line 6 here.	9		0.1565000
TOTAL of the three loss mechanisms. Add the numbers on lines 7, 8, and 9. Enter the results here.	10		7.1639000
Fraction biodegraded: Divide the number on line 7 by the number on line 10 and enter the results here.	11		0.9774006
Fraction air emissions: Divide the number on line 8 by the number on line 10 and enter the results here.	12		0.0007538
Fraction remaining in unit effluent: Divide the number on line 9 by the number on line 10 and enter the results here.	13		0.0218456
Total: add the numbers on lines 11, 12, and 13. The sum should equal 1.0	14		1.0000000

Form IV DATA FORM FOR THE ESTIMATION OF K1 AND KL FROM FULL SCALE UNIT DATA WITH AND WITHOUT BIODEGRADATION			
For a general discussion of this approach, see Air Emissions Models for Waste and Wastewater, EPA-453/R-94-080A, Chapter 5, November 1994.			
NAME OF THE FACILITY for site specific biorate determination			example
COMPOUND for site specific biorate determination			*methanol*
BIOMASS (g/L) This is the dried solids that are obtained from the mixed liquor suspended solids in the full-scale bioreactor.	1		2.4
VOLUME of full-scale system (cubic meters)	2		2700
AREA of the liquid surface of the full-scale system (square meters)	3		1500
INLET CONCENTRATION of compound (g/m^3 or ppmw)	4		133.5
EXIT CONCENTRATION of compound (g/m^3 or ppmw)	5		10.57
EXIT CONCENTRATION (NO BIODEGRADATION) of compound (g/m^3 or ppmw)	6		133
FLOW RATE of waste treated in the full-scale bioreactor (m^3/s)	7		0.1565
ESTIMATES OF K1 AND KL FROM FIELD DATA WITH AND WITHOUT BIODEGRADATION			
REMOVAL WITH BIODEGRADATION (g/s) Subtract the number on line 5 from the number on line 4 and multiply the results by the number on line 7. Enter the results here.	8		19.238545
REMOVAL WITHOUT BIODEGRADATION (g/s) Subtract the number on line 6 from the number on line 4 and multiply the results by the number on line 7. Enter the results here.	9		0.078250
KL A ESTIMATE (m^3/s) Divide the number on line 9 by the number on line 6. Enter the results here.	10		0.000588
K1 B V + KL A ESTIMATE (m^3/s) . Divide the number on line 8 by the number on line 5. Enter the results here.	11		1.820108
K1 B V ESTIMATE (m^3/s) Subtract the number on line 10 from the number on line 11. Enter the results here.	12		1.819520
Product of B and V. Multiply the number on line 1 by the number on line 2 and enter the results here.	13		6480
K1 ESTIMATE (L/gMLVSS-hr) Divide the number on line 12 by the number on line 13 and multiply by 3600 s/hr. Enter the results here.	14		1.010844
KL ESTIMATE (m/s) Divide the number on line 10 by the number on line 3. Enter the results here.	15		0.0000004

Form V DATA FORM FOR THE ESTIMATION OF K1 FOR EPA METHOD 304A OR FROM A COVERED, VENTED BIODEGRADATION UNIT.			
For a general discussion of this approach, see Air Emissions Models for Waste and Wastewater, EPA-453/R-94-080A, Chapter 5, November 1994			
NAME OF THE FACILITY for site specific biorate determination			example
COMPOUND for site specific biorate determination			*methanol*
BIOMASS (g/L) This is the dried solids that are obtained from the mixed liquor suspended solids in the unit.	1		0.075
VENT RATE of total gas leaving the unit (G, m^3/s)	2		1
TEMPERATURE of the liquid in the unit (deg. C)	3		25
INLET CONCENTRATION of compound (g/m^3 or ppmw)	4		100
EXIT CONCENTRATION of compound (g/m^3 or ppmw)	5		5
ESTIMATE OF Henry's law constant (H, g/m^3 in gas / g/m^3 in liquid). Obtained from Form IX	6		0.00021
AREA OF REACTOR (m^2)	7		3400
VOLUME OF REACTOR (m^3)	8		10000
FLOW RATE of waste treated in the unit (m^3/s)	9		0.146
CALCULATION OF THE ESTIMATE OF K1			
TOTAL REMOVAL (g/s) Subtract the number on line 5 from the number on line 4 and multiply the result by the number on line 9. Enter the results here.	10		13.870000
[H G] ESTIMATE (m^3/s) Multiply the number on line 2 by the number on line 6. Enter the results here.	11		0.000021
[K1 B V + H G] (m^3/s) Divide the number on line 10 by the number on line 5. Enter the results here.	12		2.774000
[K1 B V] ESTIMATE (m^3/s) Subtract the number on line 11 from the number on line 12. Enter the results here.	13		2.773979
If the number on line 11 is greater than the number on line 13, this procedure cannot be used to demonstrate that the compound is biodegradable. Do not complete lines 14 and 15.			
Product of B and V. Multiply the number on line 1 by the number on line 8 and enter the results here.	14		750.000000
K1 ESTIMATE (L/g MLVSS-hr) Divide the number on line 13 by the number on line 14 and multiply by 3600 s/hr. Enter the results here.	15		13.315099
EQUIVALENT KL. Divide the number on line 11 by the number on line 7. Enter the results on line 16.	16		6.18e-09

This form may be used to estimate the Equivalent KL with input data for lines 2, 6, and 7.

Form V-A DATA FORM FOR THE CALCULATION OF K1 FROM A COVERED, VENTED BIODEGRADATIN UNIT. THE VENT CONCENTRATION IS MEASURED.			
For a general discussion of this approach, see Air Emissions Models for Waste and Wastewater, EPA-453/R-94-080A, Chapter 5, November 1994.			
NAME OF THE FACILITY for site specific biorate determination			example
COMPOUND for site specific biorate determination			*methanol*
BIOMASS (g/L) This is the dried solids that are obtained from the mixed liquor suspended solids in the unit.	1		0.075
VENT RATE of total gas leaving the unit (G, m^3/s)	2		.1
TEMPERATURE of the liquid in the unit (deg. C)	3		25
INLET CONCENTRATION of compound (Ci, g/m^3 or ppmw)	4		100
EXIT CONCENTRATION of compound (Ce, g/m^3 or ppmw)	5		5
VENT CONCENTRATION of compound (Cv, g/m^3)	6		0.001
AREA OF REACTOR SURFACE (m^2)	7		3400
VOLUME OF REACTOR (m^3)	8		10000
FLOW RATE of waste treated in the unit (m^3/s)	9		0.146
CALCULATION OF THE ESTIMATE OF K1			
TOTAL REMOVAL (g/s) Subtract the number on line 5 from the number on line 4 and multiply the results by the number on line 9. Enter the results here.	10		13.87
[G Cv/Ce] ESTIMATE (m^3/s) Multiply the number on line 2 by the number on line 6 and divide by the number on line 5. Enter the results here.	11		0.000020
[K1 B V + G Cv/Ce] (m^3/s) Divide the number on line 10 by the number on line 5. Enter the results here.	12		2.77
[K1 B V] ESTIMATE (m^3/s) Subtract the number on line 11 from the number on line 12. Enter the results here.	13		2.77
If the number on line 11 is greater than the number on line 13, this procedure cannot be used to demonstrate that the compound is biodegradable. Do not complete lines 14 and 15.			
Product of B and V. Multiply the number on line 1 by the number on line 8 and enter the results here.	14		750.00
K1 ESTIMATE (L/g MLVSS-hr) Divide the number on line 13 by the number on line 14 and multiply by 3600 s/hr. Enter the results here.	15		13.30
EQUIVALENT KL. Divide the number on line 11 by the number on line 7. Enter the results here.	16		5.9e-09

This form may be used to calculate the Equivalent KL with input data for lines 2, 5, 6, and 7.

Form V-B DATA FORM FOR THE CALCULATION OF EQUIVALENT KL FROM A VENTED BIODEGRADATIN UNIT WITH AN AIR SUPPORTED COVER. THE VENT CONCENTRATION IS MEASURED.			
NAME OF THE FACILITY for site specific biorate determination			example
COMPOUND for site specific biorate determination			*methanol*
Vent rate of total gas entering the cover (m^3/s)	1		120
Vent rate of total gas leaving the cover transferred to a control device (m^3/s)	2		100
TEMPERATURE of the liquid in the unit (deg. C)	3		25
Area of air supported cover (m^2)	4		1950
Permeability through the cover (cm/s)	5		5E-6
VENT CONCENTRATION of compound (g/m^3)	6		0.0022
EXIT CONCENTRATION of compound (g/m^3 or ppmw)	7		10.57
AREA OF REACTOR SURFACE (m^2)	8		1500
Performance of vent control device (% control)	9		95
CALCULATION OF THE ESTIMATE OF EQUIVALENT KL			
Loss of forced air in the cover due to leakage. (m^3/s) Subtract the number on line 2 from the number on line 1. Enter the results here.	10		20
Loss of compound in forced air (g/s) Multiply the number on line 10 by the number on line 6. Enter the results here.	11		0.044
Loss of compound by permeation through cover (g/s). Line 4 times line 5, line 6, and divide by 100. Enter the results here.	12		0
Loss of compound by permeation through vent (g/s). Line 2 times line 6. Enter the results here.	13		0.22
Treatment of compound in control device (g/s). Line 13 times line 9, divided by 100. Enter the results here.	14		0.209
Total removal from air phase (g/s). Sum of 11, 12, and 13.	15		0.264
Total treatment effectiveness (%) Line 14 divided by 15 times 100.	16		79.1666
[G Cv/Ce] ESTIMATE (m^3/s) Divide line 15 by line 7.	17		0.025
EQUIVALENT KL. Divide the number on line 17 by line 8.	18		1.67e-05

The permeability is the ratio of the flux (g/cm^2) to the gas concentration (g/cm^3).
If the gas is generated by the unit, the gas entering the cover may be estimated from an estimate of the cover leak rate and the total gas transferred to the control device.

Form VI	DATA FORM FOR THE ESTIMATION OF K1 FROM FULL SCALE UNIT DATA WITH BIODEGRADATION		
NAME OF THE FACILITY for site specific biorate determination			example
COMPOUND for site specific biorate determination			*methanol*
BIOMASS (g/L) This is the dried solids that are obtained from the mixed liquor suspended solids in the full-scale bioreactor.	1		0.075
VOLUME of full-scale system (cubic meters)	2		100000
AREA of the liquid surface of the full-scale system (square meters)	3		10000
INLET CONCENTRATION of compound (g/m^3 or ppmw)	4		100
EXIT CONCENTRATION of compound (g/m^3 or ppmw)	5		5
ESTIMATE OF KL from Form II (m/s)	6		0.00001
FLOW RATE of waste treated in the full-scale bioreactor (m^3/s)	7		0.146
CALCULATION OF THE ESTIMATE OF K1 FROM FIELD DATA			
REMOVAL WITH BIODEGRADATION (g/s) Subtract the number on line 5 from the number on line 4 and multiply the results by the number on line 7. Enter the results here.	8		13.87
[KL A] ESTIMATE (m^3/s) Multiply the number on line 3 by the number on line 6. Enter the results here.	9		0.10
[K1 B V + KL A] (m^3/s) Divide the number on line 8 by the number on line 5. Enter the results here.	10		2.774
[K1 B V] ESTIMATE (m^3/s) Subtract the number on line 9 from the number on line 10. Enter the results here.	11		2.674
Product of B and V. Multiply the number on line 1 by the number on line 2 and enter the results here.	12		7500
K1 ESTIMATE (L/g MLVSS-hr) Divide the number on line 11 by the number on line 12 and multiply by 3600 s/hr. Enter the results here.	13		1.28352

FORM VII

DATA FORM FOR CALCULATING THE
MASS TRANSFER COEFFICIENT FOR A QUIESCENT SURFACE IMPOUNDMENT

Facility Name: _____

Waste Stream Compound: _____

Enter the following:

F - Impoundment fetch (m)	_____
D - Impoundment depth (m)	_____
U_{10} - Windspeed 10 m above liquid surface (m/s)	_____
D_w - Diffusivity of compound in water (cm^2/s)	_____
D_{ether} - Diffusivity of ether in water (cm^2/s)	_____
μ_G - Viscosity of air, (g/cm-s)	_____
ρ_G - Density of air, (g/cm^3)	_____
D_a - Diffusivity of compound in air, (cm^2/s)	_____
A - Area of impoundment, (m^2)	_____
H - Henry's law constant, (atm-m^3/g mol)	_____
R - Universal gas constant, (atm-m^3/g mol. °K)	_____
μ_L - Viscosity of water, (g/cm-s)	_____
ρ_L - Density of liquid, (g/cm^3)	_____
T - Impoundment temperature, (°C)	_____

Calculate the following:

Calculate F/D: _____

A. Calculate the liquid phase mass transfer coefficient, k_L, using one of the following procedures, (m/s)

1. Where F/D < 14 and U_{10} > 3.25 m/s, use the following procedure from MacKay and Yeun:

Calculate the Schmidt number on the liquid side, Sc_L, as follows:
$Sc_L = \mu_L/\rho_L D_w$ _____

Calculate the friction velocity, U^*, as follows, (m/s):
$U^* = 0.01 \times U_{10}(6.1 + 0.63\ U_{10})^{0.5}$ _____

Where U^* is > 0.3, calculate k_L as follows:
$k_L = (1.0 \times 10^{-6}) + (34.1 \times 10^{-4})U^* \times Sc_L^{-0.5}$ _____

Where U^* is < 0.3, calculate k_L as follows:
$k_L = (1.0 \times 10^{-6}) + (144 \times 10^{-4})(U^*)^{2.2} \times Sc_L^{-0.5}$ _____

2. For all other values of F/D and U_{10}, calculate k_L using the following procedure from Springer:[1]

[1]Springer, C., P. D. Lunney, and K. T. Valsaraj. Emission of Hazardous Chemicals from Surface and Near Surface Impoundments to Air. U.S. Environmental Protection Agency, Solid and Hazardous Waste Research Division. Cincinnati, OH. Project Number 808161-02. December 1984.

Where U_{10} is < 3.25 m/s, calculate k_L as follows:
$k_L = 2.78 \times 10^{-6}(D_w/D_{ether})^{2/3}$ _____

Where U_{10} is > 3.25 and 14 < F/D < 51.2, Calculate k_L as follows:
$k_L = [2.605 \times 10^{-9}(F/D) + 1.277 \times 10^{-7}]\ U_{10}^2\ (D_w/D_{ether})^{2/3}$ _____

Where U_{10} > 3.25 m/s and F/D > 51.2, calculate k_L as follows:
$k_L = (2.611 \times 10^{-7})U_{10}^2\ (D_w/D_{ether})^{2/3}$ _____

B. Calculate the gas phase mass transfer coefficient, k_G, using the following procedure from MacKay and Matsasugu, (m/s):[2]

Calculate the Schmidt number on the gas side, Sc_G, as follows: $Sc_G = \mu_G/\rho_G D_a$ _____

Calculate the effective diameter of the impoundment, d_e, as follows, (m):
$d_e = (4A/\pi)^{0.5}$ _____

Calculate k_G as follows, (m/s): $k_G = 4.82 \times 10^{-3}\ U_{10}^{0.78}\ Sc_G^{-0.67}\ d_e^{-0.11}$ _____

C. Calculate the partition coefficient, Keq, as follows: Keq = H/[R(T+273)]

_____

D. Calculate the overall mass transfer coefficient, K_q, as follows, (m/s):
$1/K_q = 1/k_L + 1/Keq\text{-}k_G$ _____

Where the total impoundment surface is quiescent:
$KL = K_q$

Where a portion of the impoundment surface is turbulent, continue with Form VIII.

---

[2]Hwang, S. T. Toxic Emissions from Land Disposal Facilities. Environmental Progress. 1:46-52. February 1982.

FORM VIII

DATA FORM FOR CALCULATING THE
MASS TRANSFER COEFFICIENT FOR AN AERATED SURFACE IMPOUNDMENT

Facility Name: _____

Waste Stream Compound: _____

Enter the following:

J - Oxygen transfer rating of surface aerator, (lb O_2/hr-hp) _____
POWR - Total power to aerators, (hp) _____
T - Water temperature, (°C) _____
O_t - Oxygen transfer correction factor _____
MW_L - Molecular weight of liquid _____
A_t - Turbulent surface area of impoundment, (ft^2) _____
(If unknown, use values from Table 1)
A - Total surface area of impoundment, (ft^2) _____
ρ_L - Density of liquid, (lb/ft^3) _____
D_w - Diffusivity of constituent in water, (cm^2/s) _____
$D_{O_2,w}$ - Diffusivity of oxygen in water, (cm^2/s) _____

d - Impeller diameter, (cm) _____
w - Rotational speed of impeller, (rad/s) _____
ρ_a - Density of air, (gm/cm^3) _____
N - Number of aerators _____
g_c - Gravitation constant, (lb_m-$ft/s^2/lb_f$) _____
d^* - Impeller diameter, (ft) _____
D_a - Diffusivity of constituent in air, (cm^2/s) _____
MW_a - Molecular weight of air _____
R - Universal gas constant, (atm-m^3/g mol.°C) _____
H = Henry's law constant, (atm-m^3/g mol) _____

Calculate the following:

A. Calculate the liquid phase mass transfer coefficient, k_L, using the following Equation from Thibodeaux:[3],[4]

$$k_L = [8.22 \times 10^{-9}\ J\ (POWR)(1.024)^{T-20}\ O_t\ 10^6\ MW_L/(Va_v\rho_L)]\ (D_w/\ D_{O_2,w})^{0.5},\ (m/s)$$

_____

[3]GCA Corporation. Emissions Data and Model Review for Wastewater Treatment Operations. Draft Technical Note. Prepared for U.S. Environmental Protection Agency. Contract No. 68-01-6871, Assignment 49. August 1985. p. 4-2.

[4]Hwang, S. T. Toxic Emissions from Land Disposal Facilities. Environmental Progress. 1:46-52. February 1982.

B. Calculate the gas phase mass transfer coefficient, k_G, using the following procedure from Reinhardt:[5,6]

Calculate the viscosity of air, μ_a, as follows, (g/cm.s):
$\mu_a = 4.568 \times 10^{-7}\ T + 1.7209 \times 10^{-4}$ _____

Calculate the Reynold's number as follows:
$R_e = d^2 w \rho_a / \mu_a$ _____

Calculate power to impeller, P_I, as follows, (ft.lb_f/s):
$P_I = 0.85\ (POWR)\ 550/N$ _____

Calculate the power number, p, as follows:
$p = P_I\ g_c / (\rho_L d^{*5}\ w^3)$ _____

Calculate the Schmidt number, Sc_G, as follows:
$Sc_G = \mu_a / \rho_a D_a$ _____

Calculate the Fronde number, F_r, as follows:
$F_r = d^* w^2 / g_c$ _____

Calculate k_G as follows:
$k_G = 1.35 \times 10^{-7}\ R_e^{1.42}\ p^{0.4}\ Sc_G^{0.5}\ F_r^{-0.21}\ D_a MW_a / d$, (m/s) _____

C. Calculate the partition coefficient, Keq, as follows:
Keq = H/[R(T+273)] _____

D. Calculate the overall turbulent mass transfer coefficient, K_t, as follows, (m/s):
$1/K_t = 1/k_L + 1/Keq.k_G$ _____

E. Calculate the quiescent mass transfer coefficient, K_q, for the impoundment using Form VII.
_____

F. Calculate the overall mass transfer coefficient, KL, for the impoundment as follows:

$$KL = \frac{K_q(A - A_t) + K_t A_t}{A}$$ _____

---

[5]GCA Corporation. Emissions Data and Model Review for Wastewater Treatment Operations. Draft Technical Note. Prepared for U.S. Environmental Protection Agency. Contract No. 68-01-6871, Assignment 49. August 1985. p. 4-3.

[6]Reinhardt, J. R. Gas-Side Mass-Transfer Coefficient and Interfacial Phenomena of Flat-Bladed Surface Agitators. Ph.D. dissertation, University of Arkansas, Fayetteville, Ar. 1977. p. 48.

Table 1. Turbulent Areas and Volumes for Surface Agitators[a]

ω, Motor horsepower, hp	A_t, Turbulent area,		Effective depth, ft	V, Agitated volume, ft^3	a_V, Area per volume ft^2/ft^3
	ft^2	m^2			
5	177	16.4	10	1,767	0.100
7.5	201	18.7	10	2,010	0.100
10	227	21	10.5	2,383	0.0952
15	284	26.4	11	3,119	0.0909
20	346	32.1	11.5	3,983	0.0870
25	415	38.6	12	4,986	0.0833
30	491	45.7	12	5,890	0.0833
40	661	61.4	13	8,587	0.0769
50	855	79.5	14	11,970	0.0714
60	1,075	100	15	16,130	0.0666
75	1,452	135	16	23,240	0.0625
100	2,206	205	18	39,710	0.0555

[a]Data for a high speed (1,200) rpm) aerator with 60 cm propeller diameter (d).

Form IX DATA FORM FOR THE ESTIMATION OF THE HENRY'S LAW CONSTANT FOR A COMPOUND IN THE BIOLOGICAL TREATMENT UNIT			
NAME OF THE FACILITY for site specific biorate determination			example
COMPOUND for site specific biorate determination			*methanol*
LISTED HENRY'S LAW VALUE AT 25 degrees Celsius. (Table 1, ratio of mol fraction in gas to mole fraction in water)	1		.2885
TEMPERATURE of the liquid in the unit (deg.C)	2		25
CALCULATION OF K			
Temperature adjusted Henry's law value (equals the value on line 1 if the temperature on line 2 is 25)	3		0.2885
Discuss basis of temperature adjustment			
Temperature in degrees Kelvin. Add 273.16 to the number on line 2. Enter the results here.	4		298.1600
Temperature ratio. Divide 273.16 by the number on line 4. Enter the results here.	5		0.9162
Henry's Law adjustment factor. Multiply the number on line 5 by 0.804 and enter the results here.	6		0.7366
Henry's Law value (g/m3 gas per g/m3 liquid) Multiply the number on line 3 by the number on line 6 and divide the results by 1000. Enter the results here and on Form V line 6.	7		0.000213
Henry's Law value (atm m3 per mol) Divide the number on line 3 by 55555 and enter the results here.	8		0.000005

Form X **DATA FORM FOR THE CALCULATION OF THE HENRY'S LAW CONSTANT FOR A COMPOUND IN A SEALED BATCH TEST**

NAME OF THE FACILITY for site specific biorate determination			example
COMPOUND for site specific biorate determination			*methanol*
REACTOR HEADSPACE VOLUME, (L)	1		1
REACTOR LIQUID VOLUME (L)	2		10
TEMPERATURE of the liquid in the unit (deg.C)	3		25

Wastewater compounds are biodegraded by biomass in a sealed batch test. For the compound listed above, a data set of liquid and gas concentrations is measured at four different times during the sealed batch test. The data are entered below, and the ratio of the concentrations for each data set is entered in column E.

A	B	C	D	E	
Data set	Time (hr)	Liquid Conc. (mg/L)	Gas Conc. (mg/L)	K_{eq} D/C	.0002108
1					
2					
3					
4					

Temperature in degrees Kelvin. Add 273.16 to the number on line 3. Enter the results here	4		298.16
Molar ratio. Multiply the number on line 4 by 4.555. Enter the results on line 5.	5		1,358.12
Henry's law value (mg/L gas per mg/L liquid). Enter the average value in column E above on line 6.	6		0.000211
Henry's law value (mole fraction gas per mole fraction liquid) Multiply the number on line 6 by the number on line 5. Enter the results on line 7.	7		0.286563
Expected Henry's law value. Enter the number from Form IX line 3.	8		0.288500

Precision: Discuss any variability of the numbers in column E.
Accuracy: Discuss any difference between the numbers on line 7 and line 8. Identify which value will be used for evaluating the biodegradation rate data. Divide the Henry's law value by the number on line 5 and enter the results on line 9.

K_{eq} value (mg/L gas per mg/L liquid)	9		0.000211
HEADSPACE CORRECTION FACTOR. Divide the number on line 2 by the sum of the number on line 2 and the product of the numbers on line 9 and line 1. Enter the result on line 10.	10		0.999979

The headspace correction factor should equal approximately 1 if the headspace is relatively small. Reducing the headspace volume may improve the test data quality if the headspace correction factor is substantially less than one.

Form XI

DATA FORM FOR THE CALCULATION OF THE HENRY'S LAW CONSTANT AND THE STRIPPING CONSTANT FOR A COMPOUND IN AN AERATED BATCH TEST

NAME OF THE FACILITY for site specific biorate determination			example
COMPOUND for site specific biorate determination			*methanol*
Concentration basis (liquid or gas)			gas
TEMPERATURE of the liquid in the unit (deg.C)	1		25
GAS FLOW RATE (L/hr)	2		1
LIQUID VOLUME (L)	3		10
Co concentration measurement at time=0 (mg/L)	4		

A	B	C	D	E
data point	time (hr)	Concentration, C (mg/L)	C/Co	-ln(C/Co)
1				
2				
3				
4				
5				

CALCULATIONS. Use additional lines as needed in an expansion of the above table. Plot the values in column E (y axis) vs the data in column B (x axis). Reject outliers. Curve fit with a straight line. Calculate the slope and enter the slope on line 7. Attach the plot and table to this form.

Temperature in degrees Kelvin. Add 273.16 to the number on line 1. Enter the results here	5		298.16
MOLAR RATIO. Multiply the number on line 5 by 4.555. Enter the results on line 6.	6		1,358.12
Slope of the plot of -ln(C/Co) vs time (per hour)	7		2.10e-05
Calculated K_{eq} value (mg/L gas per mg/L liquid). Divide the number on line 7 by the number on line 2 and multiply the results by the number on line 3. Enter the results on line 8.	8		0.000210
Expected K_{eq} value. Divide the number from Form IX line 3 by the number on line 6 and enter the results on line 9.	9		0.000212

Discuss any differences between the numbers on line 8 and line 9. Identify which value will be used for the evaluation of the stripping constant (line 10). Problems can sometimes be resolved by system redesign, changing the bubble size, or confirming the experimental value of K_{eq} by using Form X.

K_{eq} value (mg/L gas per mg/L liquid)	10		0.000210
STRIPPING CONSTANT(per hour). Divide the number on line 10 by number on line 3 and multiply by the number on line 2. Enter the final result on line 11.	11		0.000021

The headspace correction factor equals one for an aerated batch test.

Form XII **DATA FORM FOR THE CALCULATION OF BATCH RATES AND THE DETERMINATION OF THE MONOD CONSTANTS**

Complete this table with measured liquid concentrations from the batch test. If headspace concentrations were measured and equilibrium has been verified, convert them to liquid concentrations by using K_{eq}. If the data are scattered, plot the concentration vs. time data, and fit the data with a curve based on Equation Appendix C-4 for the Aerated Batch test or Equation Appendix C-6 for the Sealed Batch test. Complete this form with concentrations obtained from that fitted curve. If the curve fitting approach is used, attach a plot of the data and the associated fitted curve to this form. Note: If the initial results appear to be anomalous, do not use the initial results.

COMPOUND for site specific biorate determination			Methanol
Stripping rate constant (/hr) Form XI, line 11	1		2.1e-5
Enter the batch test Biomass concentration (g/L) on line 2.	2		.258
Headspace correction factor. For a Sealed Batch test use Form X line 10 or 1.00 for an Aerated Batch test.	3		0.999979

A	B	C	D	E	F	G
concentration S (mg/L)	time (hr)	Rate for interval (mg/L-hr) $(a_i-a_{i+1})/(b_{i+1}-b_i)$	Log Mean S for interval (mg/L) $(a_i-a_{i+1})/\ln(a_i/a_{i+1})$	Ratio of rate to S (/hr) (C/D)	Adjusted rate (/hr) (E-line 1)	Reciprocal of adj. rate (hr) (1/F)
1.						
2.						
3.						
4.						
5.						
6.						
7.						
8.						
9.						

Continue table on attached sheet as needed. Plot values in column G on y axis, values in column D on x axis. Extrapolate the trend of data points to the y intercept (S=0). Attach the plot to the form.

Slope of line near intercept (hr-L/mg)	4		.4845
Y intercept from plot (hr)	5		1.938
First order rate constant K1 (or Qm/Ks, L/g-hr). The number 1.00 divided by the products of the values on line 5, line 2, and line 3.	6		2.000026
Zero order rate constant (Qm, /hr). The number 1.00 divided by the products of the values on line 4, line 2, and line 3.	7		8.000104
Concentration applicable to full-scale unit. Enter on line 8.	8		5
Effective biorate K1 ESTIMATE (L/g MLVSS-hr)*	9		0.9606

*Match the concentration on line 8 to the values in Column D and look up the equivalent rate in Column F. Divide the result with both the biomass concentration (line 2) and the headspace correction factor (line 3). Enter this value on line 9. Do not use this method to estimate K1 for line 9 if the data quality is poor in Column F. The number on line 9 is multiplied by the biomass and the system concentration to estimate the full scale biorate. Alternatively, the Monod model parameters may be used.

FORM XIII. DATA FORM FOR THE ESTIMATION OF MULTIPLE ZONE BIODEGRADATION FROM UNIT CONCENTRATIONS

NAME OF THE FACILITY for site specific biorate determination		
COMPOUND for site specific biorate determination		
Number of zones in the biological treatment unit	1	
VOLUME of full-scale system (cubic meters)	2	
Average DEPTH of the full-scale system (meters)	3	
FLOW RATE of wastewater treated in the unit (m3/s)	4	
Recycle flow of wastewater added to the unit, if any (m3/s)	5	
Concentration in the wastewater treated in the unit (mg/L)	6	
Concentration in the recycle flow, if any (mg/L)	7	
Concentration in the effluent (mg/L).	8	

TOTAL INLET FLOW (m3/s) line 4 plus the number on line 5	9	
TOTAL RESIDENCE TIME (s) line 2 divided by line 9.	10	
TOTAL AREA OF IMPOUNDMENT (m2) line 2 divided by line 3	11	

Zone number	Concentration for zone, Ci (mg/L)		Area of the zone, A (m2)	Estimate of KL in the zone (m/s) from Form II		AIR STRIPPING KL A Ci (g/s)
1						
2						
3						
4						
5						
6						
7						
8						
9						
10						
TOTALS sum for each zone.		12			13	

Removal by air stripping (g/s). Line 13.	14	
Loading in effluent (g/s). Line 8 times line 9.	15	
Total loading (g/s). (Line 5 * line 7) + (line 4* line 6).	16	
Removal by biodegradation (g/s) Line 16 minus (line 14 + line 15).	17	
Fraction biodegraded: Divide line 17 by line 16..	18	
Fraction air emissions: Divide line 14 by line 16.	19	
Fraction remaining in unit effluent: Divide line 15 by line 16.	20	

[62 FR 2801, Jan. 17, 1997, as amended at 63 FR 67794, Dec. 9, 1998; 66 FR 6935, Jan. 22, 2001]

APPENDIX D TO PART 63—ALTERNATIVE VALIDATION PROCEDURE FOR EPA WASTE AND WASTEWATER METHODS

1. Applicability

This procedure is to be applied exclusively to Environmental Protection Agency methods developed by the Office of Water and the Office of Solid Waste. Alternative methods developed by any other group or agency shall be validated according to the procedures in Sections 5.1 and 5.3 of Test Method 301, 40 CFR Part 63, Appendix A. For the purposes of this appendix, "waste" means waste and wastewater.

2. Procedure

This procedure shall be applied once for each waste matrix. Waste matrix in the context of this procedure refers to the target compound mixture in the waste as well as the formulation of the medium in which the

target compounds are suspended. The owner or operator shall prepare a sampling plan. Wastewater samples shall be collected using sampling procedures which minimize loss of organic compounds during sample collection and analysis and maintain sample integrity. The sample plan shall include procedures for determining recovery efficiency of the relevant compounds regulated in the applicable subpart. An example of an acceptable sampling plan would be one that incorporates similar sampling and sample handling requirements to those of Method 25D of 40 CFR part 60, appendix A.

2.1. Sampling and Analysis

2.1.1. For each waste matrix, collect twice the number of samples required by the applicable regulation. Designate and label half the sample vials the ''spiked'' sample set, and the other half the ''unspiked'' sample set. Immediately before or immediately after sampling (immediately after in the context of this procedure means after placing the sample into the sample vial, but before the sample is capped, cooled, and shipped to the laboratory for analysis), inject, either individually or as a solution, all the target compounds into each spiked sample.

2.1.2. The mass of each spiked compound shall be 40 to 60 percent of the mass expected to be present in the waste matrix. If the concentration of the target compounds in the waste are not known, the mass of each spiked compound shall be 40 to 60 percent of the limit allowed in the applicable regulation. Analyze both sets of samples (spiked and unspiked) with the chosen method.

3. Calculations

For each pair of spiked and unspiked samples, determine the fraction of spiked compound recovered (R) using the following equations.

where:

m_r = mass spiked compound measured (μ g).

m_s = total mass of compound measured in spiked sample (μ g).

m_u = total mass of compound measured in unspiked sample (μ g).

where:

S = theoretical mass of compound spiked into spiked sample (μ g).

3.1. Method Evaluation

In order for the chosen method to be acceptable for a compound, $0.70 \leq R \leq 1.30$ (R in this case is an average value of all the spiked and unspiked sample set R values). If the average R value does not meet this criterion for a target compound, the chosen method is not acceptable for that compound, and therefore another method shall be evaluated for acceptance (by repeating the procedures outlined above with another method).

3.2. Records and Reports

Report the average R value in the test report and correct all reported measurements made with the method with the calculated R value for that compound by using the following equation:

$$\text{Reported Result} = \frac{\text{Measured Mass of Compound}}{\text{R for that compound}}$$

3.3. Optional Correction Step

If the applicable regulation allows for correction of the mass of the compound in the waste by a published f_m value, multiply the reported result calculated above with the appropriate f_m value for that compound.

[61 FR 34200, July 1, 1996]

APPENDIX E TO PART 63—MONITORING PROCEDURE FOR NONTHOROUGHLY MIXED OPEN BIOLOGICAL TREATMENT SYSTEMS AT KRAFT PULP MILLS UNDER UNSAFE SAMPLING CONDITIONS

I. Purpose

This procedure is required to be performed in subpart S of this part, entitled National Emission Standards for Hazardous Air Pollutants from the Pulp and Paper Industry. Subpart S requires this procedure in §63.453(p)(3) to be followed during unsafe sampling conditions when it is not practicable to obtain representative samples of hazardous air pollutants (HAP) concentrations from an open biological treatment unit. It is assumed that inlet and outlet HAP concentrations from the open biological treatment unit may be obtained during the unsafe sampling conditions. The purpose of this procedure is to estimate the concentration of HAP within the open biological treatment unit based on information obtained at inlet and outlet sampling locations in units that are not thoroughly mixed and, therefore, have different concentrations of HAP at different locations within the unit.

II. Definitions

Biological treatment unit = wastewater treatment unit designed and operated to promote the growth of bacteria to destroy organic materials in wastewater.

f_{bio} =The fraction of organic compounds in the wastewater biodegraded in a biological treatment unit.

Fe=The fraction of applicable organic compounds emitted from the wastewater to the atmosphere.

K1=First-order biodegradation rate constant, L/g mixed liquor volatile suspended solids (MLVSS)-hr

KL=Liquid-phase mass transfer coefficient, m/s

Ks=Monod biorate constant at half the maximum rate, g/m^3

III. Test Procedure for Determination of f_{bio} for Nonthoroughly Mixed Open Biological Treatment Units Under Unsafe Sampling Conditions

This test procedure is used under unsafe sampling conditions that do not permit practicable sampling of open biological treatment units within the unit itself, but rather relies on sampling at the inlet and outlet locations of the unit. This procedure may be used only under unsafe sampling conditions to estimate $f_{bio.}$ Once the unsafe conditions have passed, then the formal compliance demonstration procedures of f_{bio} based upon measurements within the open biological treatment unit must be completed.

A. Overview of Estimation Procedure

The steps in the estimation procedure include data collection, the estimation of concentrations within the unit, and the use of Form 1 to estimate $f_{bio.}$ The data collection procedure consists of two separate components. The first data collection component demonstrates that the open biological treatment unit can be represented by Monod kinetics and characterizes the effectiveness of the open biological treatment unit as part of the initial performance test, and the second data collection component is used when there are unsafe sampling conditions. These two data collection components are used together in a data calculation procedure based on a Monod kinetic model to estimate the concentrations in each zone of the open biological treatment unit. After the first two components of data collection are completed, the calculation procedures are used to back estimate the zone concentrations, starting with the last zone in the series and ending with the first zone.

B. Data Collection Requirements

This method is based upon modeling the nonthoroughly mixed open biological treatment unit as a series of well-mixed zones with internal recycling between the units and assuming that two Monod biological kinetic parameters can be used to characterize the biological removal rates in each unit. The data collection procedure consists of two separate components. The first data collection component is part of the initial performance test, and the second data collection component is used during unsafe sampling conditions.

1. Initial Performance Test

The objective of the first data collection component is to demonstrate that the open biological treatment unit can be represented by Monod kinetics and to characterize the performance of the open biological treatment unit. An appropriate value of the biorate constant, Ks, is determined using actual sampling data from the open biological treatment unit. This is done during the initial performance test when the open biological treatment unit is operating under normal conditions. This specific Ks value obtained during the initial performance test is used in the calculation procedure to characterize the open biological treatment unit during unsafe sampling conditions. The following open biological treatment unit characterization information is obtained from the first component of the data collection procedure:

(1) The value of the biorate constant, Ks;

(2) The number and characteristics of each zone in the open biological treatment unit (depth, area, characterization parameters for surface aeration, submerged aeration rates, biomass concentration, concentrations of organic compounds, dissolved oxygen (DO), dissolved solids, temperature, and other relevant variables); and

(3) The recycle ratio of internal recirculation between the zones. The number of zones and the above characterization of the zones are also used to determine the performance of the unit under the unsafe sampling conditions of concern.

2. Data Collected Under Unsafe Sampling Conditions

In the second data collection component obtained under unsafe sampling conditions, the measured inlet and outlet HAP concentrations and the biomass concentration are obtained for the open biological treatment unit. After the site specific data collection is completed on the day a parameter excursion occurs, the inlet and outlet concentrations are used with the prior open biological treatment unit characterization to estimate the concentrations of HAP in each zone. The following information on the open biological treatment unit must be available in the second data collection component:

(1) Basic unit variables such as inlet and recycle wastewater flow rates, type of agitation, and operating conditions;

(2) The value of the inlet and outlet HAP concentrations; and

(3) The biomass concentration in the open biological treatment unit.

C. One Time Determination of a Single Value of Ks (Initial Performance Test)

A single value of Ks is calculated using Form 3 for each data set that is collected during the initial performance test. A single composite value of Ks, deemed to be representative of the biological unit, is subsequently selected so that the f_{bio} values calculated by the procedures in this appendix (using this single value of Ks) for the data sets collected during the initial performance test are within 10 percent of the f_{bio} value determined by using Form 1 with these same data sets. The value of Ks meeting these criteria is obtained by the following steps:

(1) Determine the median of the Ks values calculated for each data set;

(2) Estimate f_{bio} for each data set using the selected Ks value (Form 1 and Form 2);

(3) Calculate f_{bio} for each data set using Form 1; and

(4) Compare the f_{bio} values obtained in steps (2) and (3); if the f_{bio} value calculated using step (2) differs from that calculated using step (3) by more than 10 percent, adjust Ks (decrease Ks if the f_{bio} value is lower than that calculated by Form 1 and vice versa) and repeat this procedure starting at step (2). If a negative value is obtained for the values of Ks, then this negative kinetic constant may not be used with the Monod model. If a negative value of Ks is obtained, this test procedure cannot be used for evaluating the performance of the open biological treatment unit.

D. Confirmation of Monod Kinetics (Initial Performance Test)

(1) Confirmation that the unit can be represented by Monod kinetics is made by identifying the following two items:

(i) The zone methanol concentrations measured during the initial performance test; and

(ii) The zone methanol concentrations estimated by the Multiple Zone Concentrations Calculations Procedure based on inlet and outlet concentrations (Column A of Form 2). For each zone, the concentration in item 1 is compared to the concentration in item 2.

(2) For each zone, the estimated value of item 2 must be:

(i) Within 25 percent of item 1 when item 1 exceeds 8 mg/L; or

(ii) Within 2 mg/L of item 1 when item 1 is 8 mg/L or less.

(3) Successful demonstration that the calculated zone concentrations meet these criteria must be achieved for 80 percent of the performance test data sets.

(4) If negative values are obtained for the values of K1 and Ks, then these negative kinetic constants may not be used with the Monod model, even if the criteria are met. If negative values are obtained, this test procedure cannot be used for evaluating the performance of the open biological treatment unit.

E. Determination of KL for Each Zone (Unsafe Sampling Conditions)

(1) A site-specific liquid-phase mass transfer coefficient (KL) must be obtained for each zone during the unsafe sampling conditions. Do not use a default value for KL. The KL value for each zone must be based on the site-specific parameters of the specific unit. The first step in using this procedure is to calculate KL for each zone in the unit using Form 4. Form 4 outlines the procedure to follow for using mass transfer equations to determine KL. Form 4 identifies the appropriate form to use for providing the detailed calculations to support the estimate of the value of KL. Forms 5 and 6 are used to provide individual compound estimates of KL for quiescent and aerated impoundments, respectively. A computer model may be used to perform the calculations. If the WATER8 model or the most recent update to this model is used, then report the computer model input parameters that you used as an attachment to Form 4. In addition, the Bay Area Sewage Toxics Emission (BASTE) model, version 3.0, or equivalent upgrade and the TOXCHEM (Environment Canada's Wastewater Technology Centre and Environmega, Ltd.) model, version 1.10, or equivalent upgrade may also be used to determine KL for the open biological treatment unit with the following stipulations:

(i) The programs must be altered to output a KL value that is based on the site-specific parameters of the unit modeled; and

(ii) The Henry's law value listed in Form 4 must be substituted for the existing Henry's law values in the models.

(2) The Henry's law value listed in Form 4 may be obtained from the following sources:

(i) Values listed by EPA with temperature adjustment if needed;

(ii) Measured values for the system of concern with temperature adjustment; or

(iii) Literature values of Henry's law values for methanol, adjusted for temperature if needed.

(3) Input values used in the model and corresponding output values shall become part of the documentation of the f_{bio} determination. The owner or operator should be aware that these models may not provide equivalent KL values for some types of units. To obtain an equivalent KL value in this situation, the owner or operator shall either use the appropriate procedure on Form 4 or adjust the KL value from the model to the equivalent KL value as described on Form 4.

(4) Report the input parameters that you used in the computer model on Forms 5, 6, and 7 as an attachment to Form 4. If you have submerged air flow in your unit, you must add the value of KL estimated on Form 7 to the value of KL obtained with Forms 5 and 6 before using the value of KL with Form 2.

F. Estimation of Zone Concentrations (Unsafe Sampling Conditions)

Form 2 is used to estimate the zone concentrations of HAP based on the inlet and outlet data. The value of Ks entered on the form is that single composite value of Ks discussed in section III.C of this appendix. This value of Ks is calculated during the Initial Performance Test (and subsequently updated, if necessary). A unique value of the biorate K1 is entered on line 5 of Form 2, and the inlet concentration is estimated in Column A of Form 2. The inlet concentration is located in the row of Form 2 corresponding to zone 0. If there are three zones in the system, n–3 equals 0 for the inlet concentration row. These estimated zone concentrations are then used in Form 1 to estimate f bio for the treatment unit.

G. Quality Control/Quality Assurance (QA/QC)

A QA/QC plan outlining the procedures used to determine the measured inlet and outlet concentrations during unsafe conditions and how the zone characterization data were obtained during the initial performance test shall be prepared and submitted with the initial performance test report. The plan should include, but may not be limited to:

(1) A description of each of the sampling methods that were used (method, procedures, time, method to avoid losses during sampling and holding, and sampling procedures) including simplified schematic drawings;

(2) A description of how that biomass was sampled from the biotreatment unit, including methods, locations, and times;

(3) A description of what conditions (DO, temperature, etc.) are important, what the target values are in the zones, how the factors were controlled, and how they were monitored. These conditions are primarily used to establish that the conditions of the initial performance test correspond to the conditions of the day in question;

(4) A description of how each analytical measurement was conducted, including preparation of solutions, dilution procedures, sampling procedures, monitoring of conditions, etc;

(5) A description of the analytical instrumentation used, how the instruments were calibrated, and a summary of the accuracy and precision for each instrument;

(6) A description of the test methods used to determine HAP concentrations and other measurements. Section 63.457(c)(3) specifies the test methods that must be used to determine HAP concentrations. During unsafe sampling conditions, you do not have to sample over an extended period of time or obtain more than one sample at each sample point.

(7) A description of how data are captured, recorded, and stored; and

(8) A description of the equations used and their solutions for sampling and analysis, including a reference to any software used for calculations and/or curve-fitting.

IV. Calculation of Individual f_{bio} (Unsafe Sampling Conditions)

Use Form 1 with your zone concentration information to estimate the value of f bio under unsafe sampling conditions. Form 1 uses measured concentrations of HAP in the unit inlet and outlet, and Form 1 also uses the estimated concentrations in each zone of the unit obtained from Form 2. This procedure may be used on an open biological treatment unit that has defined zones within the unit. Use Form 1 to determine f_{bio} for each open biological treatment unit as it exists under subpart S of part 63. The first step in using Form 1 is to calculate KL for each zone in the unit using Form 4. Form 7 must also be used if submerged aeration is used. After KL is determined using field data, obtain the concentrations of the HAP in each zone. In this alternative procedure for unsafe sampling conditions, the actual measured concentrations of the HAP in each zone are replaced with the zone concentrations that are estimated with Form 2. After KL and the zone concentrations are determined, Form 1 is used to estimate the overall unit Fe and f_{bio} for methanol.

Form 1

DATA FORM FOR THE ESTIMATION OF MULTIPLE ZONE BIODEGRADATION FROM UNIT CONCENTRATIONS

NAME OF THE FACILITY for site specific biorate determination		
COMPOUND for site specific biorate determination		Methanol
Number of zones in the biological treatment unit	1	
VOLUME of full-scale system (cubic meters)	2	
Average DEPTH of the full-scale system (meters)	3	
FLOW RATE of wastewater treated in the unit (m3/s)	4	
Recycle flow of wastewater added to the unit, if any (m3/s)	5	
Concentration in the wastewater treated in the unit (mg/L)	6	
Concentration in the recycle flow, if any (mg/L)	7	
Concentration in the effluent (mg/L).	8	

TOTAL INLET FLOW (m3/s) line 4 plus the number on line 5	9	
TOTAL RESIDENCE TIME (s) line 2 divided by line 9.	10	
TOTAL AREA OF IMPOUNDMENT (m2) line 2 divided by line 3	11	

Zone number	Concentration for zone, Ci (mg/L)		Area of the zone, A (m2)	Estimate of KL in the zone (m/s) from Form 4		AIR STRIPPING KL A Ci (g/s)
1						
2						
3						
4						
5						
6						
7						
8						
9						
10						
TOTALS sum for each zone.		12			13	

Removal by air stripping (g/s). Line 13.	14	
Loading in effluent (g/s). Line 8 times line 9.	15	
Total loading (g/s). (Line 5 * line 7) + (line 4* line 6).	16	
Removal by biodegradation (g/s) Line 16 minus (line 14 + line 15).	17	
Fraction biodegraded: Divide line 17 by line 16.	18	
Fraction air emissions: Divide line 14 by line 16.	19	
Fraction remaining in unit effluent: Divide line 15 by line 16.	20	

Form 2

DATA FORM FOR THE DETERMINATION OF ZONE CONCENTRATIONS FROM KS AND INLET/OUTLET DATA

COMPOUND for site specific biorates determination	Methanol	
Influent Flow (m^3/s)	1	
Inlet Concentration (g/m^3)	2	
Outlet Concentration (g/m3) - Use value from line 3 as Ci value in column A for final Zone (zone n) in table below	3	
Saturation Coefficient, Ks (g/m3) From Form 3	4	
Biorate K1 (1/s) - Estimate	5	
Number of Zones	6	

Adjust K1 value (line 5) until Column A, Row (n - line 6) is within +/- 5% of line 2.

Instructions for completion of table: (1) Transfer value from line 3 into row n, column A. (2) Enter data for all zones into columns B, D, E, G, H, & K. (3) Beginning with row n, perform calculations for columns F, I, J, L, M, N, & O for that zone only. (4) Calculate row n-1, column A using results from previous row (i.e., J_{i-1} ,M_{i-1} , N_{i-1}) . (5) Repeat steps (3) and (4) until a row of calculations has been completed for each zone. (6) row n - line 6, column A is the calculated inlet concentration.

	A	B	C	D	E	F	G	H
Zone Number	Ci $(J_{i-1} + N_{i-1})/O_{i-1}$ g/m^3	Temp C	(1.045)^(B-25)	biomass g/m^3	Volume m^3	line 5 * A*C*D *E/(line 4+ A) g/s	KL m/s	Area m^2
n								
n-1								
n-2								
n-3								
n-4								

	I	J	K	L	M	N	O
Zone Number	A*G*H g/s	Reaction F+I g/s	Backmix BM_i	$(1+BM_i+BM_{i+1})$ $*C_i$*line 1 g/s	$BM_{i+1} * C_{i+1}$ *line1 g/s	Flux L-M g/s	$(1+BM_i)$ * line1 g/s
n							
n-1							
n-2							
n-3							
n-4							

The backmix ratio, Bmi, is the ratio of (the return flow from the zone back to the upstream zone) to (the total inlet flow into the unit). This approach assumes that the flow is sequential through the different zones.

Form 3

DATA FORM FOR THE DETERMINATION OF MONOD CONSTANTS FROM ZONE CONCENTRATIONS WITH BACKMIXING

COMPOUND for site specific biorates determination	Methanol	
Total Inlet Flow (m3/s)	1	
Inlet Concentration (g/m3) - Use value from line 2 as Ci-1 value in column D for Zone 1 in table below	2	

	A	B	C	D	E	F	G	H
Zone Number	Ci g/m^3	Backmix (BM_i)	$(1+BM_i+BM_{i+1})*C_i$ g/m^3	$(1+BM_i)*C_{i-1}$	$BM_{i+1} * C_{i+1}$ g/m^3	KL m/s	Area m^2	A*F*G g/s
1								
2								
3								
4								
5								

	I	J	K	L	M	N	O
Zone Number	Volume m3	Temp C	(1.045)^(J-25)	biomass g/m^3	I*K*L gm	M/[line 1*(D+E-C)-H] s	1/A m^3/g
1							
2							
3							
4							
5							

Plot values in column N on y axis, and values in column O on x axis, up to, and including first row where Ci is equal to MDL or to last zone.

Y intercept from plot. (g-s/m3)	3	
K1 (1/s). 1/line 3	4	
Slope of line	5	
Ks (g/m3). Line 5 times line 4	6	

The backmix ratio, Bmi, is the ratio of (the return flow from the zone back to the upstream zone) to (the total inlet flow into the unit). This approach assumes that the flow is sequential through the different zones.

Form 4

PROCEDURES FORM FOR THE
ESTIMATION OF THE KL FROM UNIT SPECIFICATIONS

NAME OF THE FACILITY for site specific biorate determination	
NAME OF UNIT for site specific biorate determination	
NAME OF COMPOUND	Methanol
HENRY'S LAW constant for the compound (mole fraction in gas per mole fraction in water at 25 degrees Celsius)	

IDENTIFY THE TYPE OF UNIT (check one box below)

Quiescent impoundment	1	
Surface agitated impoundment	2	
Surface agitated impoundment with submerged air present	3	
Unit with submerged aeration gas	4	

PROCEDURES BASED UPON THE TYPE OF UNIT

1. Use Form 5 to determine KL for the surface of the quiescent impoundment.
2. Use Form 5 to determine KL for the surface of the quiescent part of the impoundment. Use Form 6 to determine KL for the part of the surface that is agitated, then complete Form 6 with Kq as determined from Form 5.
3. Use Form 5 to determine KL for the surface of the quiescent part of the impoundment. Use Form 6 to determine KL for the part of the surface that is agitated, then complete Form 6 with Kq as determined from Form 5. The total system KL is the sum of the KL from the completed Form 6 and the equivalent KL from Form 7.
4. Evaluate the fraction of the surface that is agitated and the extent of the aeration. Use Form 5 to determine KL for the quiescent part of the surface of the impoundment. Use Form 6 to determine KL for the part of the surface that is agitated, then complete Form 6 with Kq as determined from Form 5. The total system KL is the sum of the KL from the completed Form 6 and the equivalent KL from Form 7. See section 5.6.1 in the document Air Emission Models for Waste and Wastewater.

Estimate of surface KL obtained from above procedures (m/s)	5	
If the submerged aeration is present, the equivalent KL from Form 7	6	
The total KL is the sum of line 5 and line 6.	7	

Form 5

FORM FOR CALCULATING THE MASS TRANSFER COEFFICIENT FOR A QUIESCENT SURFACE IMPOUNDMENT

FACILITY NAME for site specific biorate determination	
COMPOUND for site specific biorate determination	Methanol

Input values

Enter the following:

F - Impoundment fetch (m)	
D - Impoundment depth (m)	
U10 - Windspeed 10 m above liquid surface (m/s)	
Dw - Diffusivity of compound in water (cm2/s)	
Dether - Diffusivity of ether in water (cm2/s)	
μG - Viscosity of air, (g/cm-s)	
G - Density of air, (g/cm3)	
Da - Diffusivity of compound in air, (cm2/s)	
A - Area of impoundment, (m2)	
H - Henry's law constant, (atm-m3/g mol)	
R - Universal gas constant, (atm-m3/g mol. K)	
μL - Viscosity of water, (g/cm-s)	
L - Density of liquid, (g/cm3)	
T - Impoundment temperature, (C)	

Calculate the following:

Calculate F/D: [ ]

Calculate the liquid phase mass transfer coefficient, kL, using one of the following procedures, (m/s)

Where F/D < 14 and U10 > 3.25 m/s, use the following procedure from MacKay and Yeun:

Calculate the Schmidt number on the liquid side, ScL, as follows:
ScL = μL/ LDw [ ]

Calculate the friction velocity, U*, as follows, (m/s):
U* = 0.01 x U10(6.1 + 0.63 U10)^0.5 [ ]

Where U* is > 0.3, calculate kL as follows:
kL = (1.0 x 10^-6) + (34.1 x 10^-4)U* x ScL^-0.5 [ ]

Where U* is < 0.3, calculate kL as follows:
kL = (1.0 x 10^-6) + (144 x 10^-4)(U*)^2.2 x ScL^-0.5 [ ]

For all other values of F/D and U10, calculate kL using the following procedure from 2Springer:

Where U10 is < 3.25 m/s, calculate kL as follows:

(identical to Form VII, Appendix C to Part 63) 1 of 2

Form 5

kL = 2.78 x 10^-6(Dw/Dether)^2/3

Where U10 is > 3.25 and 14 < F/D < 51.2, Calculate kL as follows:
kL = [2.605 x 10^-9(F/D) + 1.277 x 10^-7] U10^2 (Dw/Dether)^2/3

Where U10 > 3.25 m/s and F/D > 51.2, calculate kL as follows:
kL = (2.611 x 10^-7)U10^2 (Dw/Dether)^2/3

B. Calculate the gas phase mass transfer coefficient, kG, using the following procedure from MacKay and Matsasugu, (m/s):

Calculate the Schmidt number on the gas side, ScG, as follows: ScG =μG/ GDa

Calculate the effective diameter of the impoundment, de, as follows, (m):
de = (4A/3.14)^0.5

Calculate kG as follows, (m/s): kG = 4.82 x 10^-3 U10^.78 ScG^-0.67 de^-0.11

C. Calculate the partition coefficient, Keq, as follows: Keq = H/[R(T+273)]

D. Calculate the overall mass transfer coefficient, Kq, as follows, (m/s):
1/Kq = 1/kL + 1/(Keq-kG)

Where the total impoundment surface is quiescent:
KL = Kq

Where a portion of the impoundment surface is turbulent, continue with Form 6.

Form 6

DATA FORM FOR CALCULATING THE MASS TRANSFER COEFFICIENT FOR AN AERATED SURFACE IMPOUNDMENT

Facility Name:	
Waste Stream Compound:	Methanol

Enter the following:

J - Oxygen transfer rating of surface aerator, (lb O2/hr-hp)	
POWR - Total power to aerators, (hp)	
T - Water temperature, (C)	
Ot - Oxygen transfer correction factor	
MWL - Molecular weight of liquid	
At - Turbulent surface area of impoundment, (ft2)	
(If unknown, use values from Table 1)	
A - Total surface area of impoundment, (ft2)	
rhoL - Density of liquid, (lb/ft3)	
Dw - Diffusivity of constituent in water, (cm2/s)	
Do - Diffusivity of oxygen in water, (cm2/s)	
d - Impeller diameter, (cm)	
w - Rotational speed of impeller, (rad/s)	
a - Density of air, (gm/cm3)	
N - Number of aerators	
gc - Gravitation constant, (lbm-ft/s2/lbf)	
d* - Impeller diameter, (ft)	
Da - Diffusivity of constituent in air, (cm2/s)	
MWa - Molecular weight of air	
R - Universal gas constant, (atm-m3/g mol. C)	
H = Henry's law constant, (atm-m3/g mol)	

Calculate the following:

A. Calculate the liquid phase mass transfer coefficient, kL, using the following Equation from Thibodeaux:,

kL =[8.22 x 10^-9 J (POWR)(1.024)^(T-20) Ot 10^6 MWL/(At x rhoL/62.37)] (Dw/Do)^0.5, (m/s)

B. Calculate the gas phase mass transfer coefficient, kG, using the following procedure from Reinhardt:,

Calculate the viscosity of air, μa, as follows, (g/cm.s):
μa = 4.568 x 10^-7 T + 1.7209 x 10^-4

Calculate the Reynold's number as follows:
Re = d^2 w a/μa

Calculate power to impeller, PI, as follows, (ft.lbf/s):
PI = 0.85 (POWR) 550/N

(identical to Form VIII, Appendix C to Part 63) 1 of 3

Form 6

Calculate the power number, p, as follows:
p = PI gc/(rhoL d^5 w^3)

Calculate the Schmidt number, ScG, as follows:
ScG = μa/ (a Da)

Calculate the Fronde number, Fr, as follows:
Fr = d*w^2/gc

Calculate kG as follows:
kG = 1.35 x 10^-7 Re ^1.42 p^0.4 ScG^0.5 Fr^-0.21 Da MWa/d, (m/s)

C. Calculate the partition coefficient, Keq, as follows:
Keq = H/[R(T+273)]

D. Calculate the overall turbulent mass transfer coefficient, Kt, as follows, (m/s):
1/Kt = 1/kL + 1/(Keq*kG)

E. Calculate the quiescent mass transfer coefficient, Kq, for the impoundment using Form 5.

F. Calculate the overall mass transfer coefficient, KL, for the impoundment as follows:
KL = (A-At)/A *Kq + At*Kt/A

Form 6 Table 1

PROCEDURES FORM FOR THE ESTIMATION OF THE KL FROM WATER8 a.b

Motor horsepower	At, Turbulent area,		Effective depth	V, Agitated volume	aV, Area per volume
hp	ft2	m2	ft	ft3	ft2/ft3
5	177	16.4	10	1,767	0.1002
7.5	201	18.7	10	2,010	0.1000
10	227	21	10.5	2,383	0.0953
15	284	26.4	11	3,119	0.0911
20	346	32.1	11.5	3,983	0.0869
25	415	38.6	12	4,986	0.0832
30	491	45.7	12	5,890	0.0834
40	661	61.4	13	8,587	0.0770
50	855	79.5	14	11,970	0.0714
60	1075	100	15	16,130	0.0666
75	1452	135	16	23,240	0.0625
100	2206	205	18	39,710	0.0556

a Data for a high speed (1,200) rpm) aerator with 60 cm propeller diameter (d).
b This table provides information potentially useful for the value of At.

Form 7

DATA FORM FOR THE ESTIMATION OF THE EQUIVALENT KL FROM AIR STRIPPING DUE TO SUBMERGED AERATION.

NAME OF THE FACILITY for site specific biorate determination		
COMPOUND for site specific biorate determination		Methanol
VENT RATE of total gas leaving the unit (G, m3/s)	1	
TEMPERATURE of the liquid in the unit (deg. C)	2	
ESTIMATE OF Henry's law constant (H, g/m3 in gas / g/m3 in liquid). Corrected for the temperature on line 2.	3	
AREA OF REACTOR (m2)	4	

CALCULATION OF THE ESTIMATE OF EQUIVALENT KL

[H G] ESTIMATE (m3/s) Multiply the number on line 1 by the number on line 3. Enter the results here.	5	
EQUIVALENT KL. Divide the number on line 5 by the number on line 4. Enter the results on line 6.	6	

[65 FR 80765, Dec. 22, 2000]