AUTHENTICATED
U.S. GOVERNMENT
INFORMATION
GPO

Title 40—Protection of Environment

(This book contains parts 87 to 135)

Part

CHAPTER I—Environmental Protection Agency (Continued) 87

CHAPTER I—ENVIRONMENTAL PROTECTION AGENCY (CONTINUED)

EDITORIAL NOTE: Nomenclature changes to chapter I appear at 65 FR 47324, 47325, Aug. 2, 2000; 66 FR 34375, 34376, June 28, 2001.

SUBCHAPTER C—AIR PROGRAMS (CONTINUED)

Part		*Page*
87	Control of air pollution from aircraft and aircraft engines	5
88	Clean-fuel vehicles	12
89	Control of emissions from new and in-use nonroad compression-ignition engines	39
90	Control of emissions from nonroad spark-ignition engines	164
91	Control of emissions from marine spark-ignition engines	294
92	Control of air pollution from locomotives and locomotive engines	402
93	Determining conformity of Federal actions to State or Federal implementation plans	544
94	Control of air pollution from marine compression-ignition engines	583
95	Mandatory patent licenses	654
96	NO_X Budget Trading Program for State Implementation Plans	656
97	Federal NO_X Budget Trading Program	697
98–99	[Reserved]	

PART 87—CONTROL OF AIR POLLUTION FROM AIRCRAFT AND AIRCRAFT ENGINES

Subpart A—General Provisions

Sec.
87.1 Definitions.
87.2 Abbreviations.
87.3 General requirements.
87.4 [Reserved]
87.5 Special test procedures.
87.6 Aircraft safety.
87.7 Exemptions.

Subpart B—Engine Fuel Venting Emissions (New and In-Use Aircraft Gas Turbine Engines)

87.10 Applicability.
87.11 Standard for fuel venting emissions.

Subpart C—Exhaust Emissions (New Aircraft Gas Turbine Engines)

87.20 Applicability.
87.21 Standards for exhaust emissions.

Subpart D—Exhaust Emissions (In-Use Aircraft Gas Turbine Engines)

87.30 Applicability.
87.31 Standards for exhaust emissions.

Subparts E–F [Reserved]

Subpart G—Test Procedures for Engine Exhaust Gaseous Emissions (Aircraft and Aircraft Gas Turbine Engines)

87.60 Introduction.
87.61 Turbine fuel specifications.
87.62 Test procedure (propulsion engines).
87.63 [Reserved]
87.64 Sampling and analytical procedures for measuring gaseous exhaust emissions.
87.65—87.70 [Reserved]
87.71 Compliance with gaseous emission standards.

Subpart H—Test Procedures for Engine Smoke Emissions (Aircraft Gas Turbine Engines)

87.80 Introduction.
87.81 Fuel specifications.
87.82 Sampling and analytical procedures for measuring smoke exhaust emissions.
87.83—87.88 [Reserved]
87.89 Compliance with smoke emission standards.

AUTHORITY: Secs. 231, 301(a), Clean Air Act, as amended (42 U.S.C. 7571, 7601(a)), unless otherwise noted.

SOURCE: 47 FR 58470, Dec. 30, 1982, unless otherwise noted.

Subpart A—General Provisions

§ 87.1 Definitions.

(a) As used in this part, all terms not defined herein shall have the meaning given them in the Act:

Act means the Clean Air Act, as amended (42 U.S.C. 7401 *et seq.*).

Administrator means the Administrator of the Environmental Protection Agency and any other officer or employee of the Environmental Protection Agency to whom authority involved may be delegated.

Aircraft means any airplane for which a U.S. standard airworthiness certificate or equivalent foreign airworthiness certificate is issued.

Aircraft engine means a propulsion engine which is installed in or which is manufactured for installation in an aircraft.

Aircraft gas turbine engine means a turboprop, turbofan, or turbojet aircraft engine.

Class TP means all aircraft turboprop engines.

Class TF means all turbofan or turbojet aircraft engines or aircraft engines designed for applications that otherwise would have been fulfilled by turbojet and turbofan engines except engines of class T3, T8, and TSS.

Class T3 means all aircraft gas turbine engines of the JT3D model family.

Class T8 means all aircraft gas turbine engines of the JT8D model family.

Class TSS means all aircraft gas turbine engines employed for propulsion of aircraft designed to operate at supersonic flight speeds.

Commercial aircraft engine means any aircraft engine used or intended for use by an ''air carrier,'' (including those engaged in ''intrastate air transportation'') or a ''commercial operator'' (including those engaged in ''intrastate air transportation'') as these terms are defined in the Federal Aviation Act and the Federal Aviation Regulations.

Commercial aircraft gas turbine engine means a turboprop, turbofan, or turbojet commercial aircraft engine.

Emission measurement system means all of the equipment necessary to transport and measure the level of

emissions. This includes the sample system and the instrumentation system.

Engine Model means all commercial aircraft turbine engines which are of the same general series, displacement, and design characteristics and are usually approved under the same type certificate.

Exhaust emissions means substances emitted to the atmosphere from the exhaust discharge nozzle of an aircraft or aircraft engine.

Fuel venting emissions means raw fuel, exclusive of hydrocarbons in the exhaust emissions, discharged from aircraft gas turbine engines during all normal ground and flight operations.

In-use aircraft gas turbine engine means an aircraft gas turbine engine which is in service.

New aircraft turbine engine means an aircraft gas turbine engine which has never been in service.

Power setting means the power or thrust output of an engine in terms of kilonewtons thrust for turbojet and turbofan engines and shaft power in terms of kilowatts for turboprop engines.

Rated output (rO) means the maximum power/thrust available for takeoff at standard day conditions as approved for the engine by the Federal Aviation Administration, including reheat contribution where applicable, but excluding any contribution due to water injection.

Rated pressure ratio (rPR) means the ratio between the combustor inlet pressure and the engine inlet pressure achieved by an engine operating at rated output.

Sample system means the system which provides for the transportation of the gaseous emission sample from the sample probe to the inlet of the instrumentation system.

Secretary means the Secretary of Transportation and any other officer or employee of the Department of Transportation to whom the authority involved may be delegated.

Shaft power means only the measured shaft power output of a turboprop engine.

Smoke means the matter in exhaust emissions which obscures the transmission of light.

Smoke number (SN) means the dimensionless term quantifying smoke emissions.

Standard day conditions means standard ambient conditions as described in the United States Standard Atmosphere, 1976, (i.e., Temperature =15 °C, specific humidity =0.00 kg/ H_2 O/kg dry air, and pressure =101325 Pa.)

Taxi/idle (in) means those aircraft operations involving taxi and idle between the time of landing roll-out and final shutdown of all propulsion engines.

Taxi/idle (out) means those aircraft operations involving taxi and idle between the time of initial starting of the propulsion engine(s) used for the taxi and turn on to duty runway.

[47 FR 58470, Dec. 30, 1982, as amended at 49 FR 31875, Aug. 9, 1984; 62 FR 25365, May 8, 1997]

§ 87.2 Abbreviations.

The abbreviations used in this part have the following meanings in both upper and lower case:

CO Carbon Monoxide
FAA Federal Aviation Administration, Department of Transportation
HC Hydrocarbon(s)
hr. Hour(s)
LTO Landing takeoff
min. Minute(s)
NO_X Oxides of nitrogen
rO Rated output
rPR Rated pressure ratio
sec. Seconds
SP Shaft power
SN Smoke number
T Temperature, degrees Kelvin
TIM Time in mode
W Watt(s)
° Degree
% Percent

[47 FR 58470, Dec. 30, 1982, as amended at 49 FR 31875, Aug. 9, 1984; 62 FR 25365, May 8, 1997]

§ 87.3 General requirements.

(a) This part provides for the approval or acceptance by the Administrator or the Secretary of testing and sampling methods, analytical, techniques, and related equipment not identical to those specified in this part. Before either approves or accepts any

such alternate, equivalent, or otherwise nonidentical procedures or equipment, the Administrator or the Secretary shall consult with the other in determining whether or not the action requires rulemaking under sections 231 and 232 of the Clean Air Act, as amended, consistent with the Administrator's and the Secretary's responsibilities under sections 231 and 232 of the Act. (42 U.S.C. 7571, 7572).

(b) Under section 232 of the Act, the Secretary issues regulations to insure compliance with this part.

(c) With respect to aircraft of foreign registry, these regulations shall apply in a manner consistent with any obligation assumed by the United States in any treaty, convention or agreement between the United States and any foreign country or foreign countries.

§ 87.4 [Reserved]

§ 87.5 Special test procedures.

The Administrator or the Secretary may, upon written application by a manufacturer or operator of aircraft or aircraft engines, approve test procedures for any aircraft or aircraft engine that is not susceptible to satisfactory testing by the procedures set forth herein. Prior to taking action on any such application, the Administrator or the Secretary shall consult with the other.

§ 87.6 Aircraft safety.

The provisions of this part will be revised if at any time the Secretary determines that an emission standard cannot be met within the specified time without creating a safety hazard.

§ 87.7 Exemptions.

(a) *Exemptions based on flights for short durations at infrequent intervals.* The emission standards of this part do not apply to engines which power aircraft operated in the United States for short durations at infrequent intervals. Such operations are limited to:

(1) Flights of an aircraft for the purpose of export to a foreign country, including any flights essential to demonstrate the integrity of an aircraft prior to its flight to a point outside the United States.

(2) Flights to a base where repairs, alterations or maintenance are to be performed, or to a point of storage, and flights for the purpose of returning an aircraft to service.

(3) Official visits by representatives of foreign governments.

(4) Other flights the Secretary determines, after consultation with the Administrator, to be for short durations at infrequent intervals. A request for such a determination shall be made before the flight takes place.

(b) *Exemptions for very low production models.* The emissions standards of this part do not apply to engines of very low total production after the date of applicability. For the purpose of this part, ''very low production'' is limited to a maximum total production for United States civil aviation applications of no more than 200 units covered by the same type certificate after January 1, 1984.

(1) A maximum annual production rate after January 1, 1984 of 20 units covered by the same type certificate; and

(2) A maximum total production after January 1, 1984 of 200 units covered by the same type certificate.

(c) *Exemptions for New Engines in Other Categories.* The emissions standards of this part do not apply to engines for which the Secretary determines, with the concurrence of the Administrator, that application of any standard under § 87.21 is not justified, based upon consideration of:

(1) Adverse economic impact on the manufacturer.

(2) Adverse economic impact on the aircraft and airline industries at large.

(3) Equity in administering the standards among all economically competing parties.

(4) Public health and welfare effects.

(5) Other factors which the Secretary, after consultation with the Administrator, may deem relevant to the case in question.

(d) *Time Limited Exemptions for In Use Engines.* The emissions standards of this part do not apply to aircraft or aircraft engines for time periods which the Secretary determines, with the concurrence of the Administrator, that any applicable standard under § 87.11(a),

§ 87.31(a), or § 87.31(c), should not be applied based upon consideration of the following:

(1) Documentation demonstrating that all good faith efforts to achieve compliance with such standard have been made.

(2) Documentation demonstrating that the inability to comply with such standard is due to circumstances beyond the control of the owner or operator of the aircraft.

(3) A plan in which the owner or operator of the aircraft shows that he will achieve compliance in the shortest time which is feasible.

(4) Applications for a determination that any requirements of § 87.11(a), § 87.31(a) or § 87.31(c) do not apply shall be submitted in duplicate to the Secretary in accordance with procedures established by the Secretary.

(e) The Secretary shall publish in the FEDERAL REGISTER the name of the organization to whom exemptions are granted and the period of such exemptions.

(f) No state or political subdivision thereof may attempt to enforce a standard respecting emissions from an aircraft or engine if such aircraft or engine has been exempted from such standard under this part.

[47 FR 58470, Dec. 30, 1982, as amended at 49 FR 31875, Aug. 9, 1984; 49 FR 41002, Oct. 18, 1984]

Subpart B—Engine Fuel Venting Emissions (New and In-Use Aircraft Gas Turbine Engines)

§ 87.10 Applicability.

(a) The provisions of this subpart are applicable to all new aircraft gas turbines of classes T3, T8, TSS and TF equal to or greater than 36 kilonewton rated output, manufactured on or after January 1, 1974, and to all in-use aircraft gas turbine engines of classes T3, T8, TSS and TF equal to or greater than 36 kilonewton rated output manufactured after February 1, 1974.

(b) The provisions of this subpart are also applicable to all new aircraft gas turbines of class TF less than 36 kilonewton rated output and class TP manufactured on or after January 1, 1975 and to all in-use aircraft gas turbines of class TF less than 36 kilonewton rated output and class TP manufactured after January 1, 1975.

[49 FR 41002, Oct. 18, 1984]

§ 87.11 Standard for fuel venting emissions.

(a) No fuel venting emissions shall be discharged into the atmosphere from any new or in-use aircraft gas turbine engine subject to the subpart. This paragraph is directed at the elimination of intentional discharge to the atmosphere of fuel drained from fuel nozzle manifolds after engines are shut down and does not apply to normal fuel seepage from shaft seals, joints, and fittings.

(b) Conformity with the standard set forth in paragraph (a) of this section shall be determined by inspection of the method designed to eliminate these emissions.

Subpart C—Exhaust Emissions (New Aircraft Gas Turbine Engines)

§ 87.20 Applicability.

The provisions of this subpart are applicable to all aircraft gas turbine engines of the classes specified beginning on the dates specified.

§ 87.21 Standards for exhaust emissions.

(a) Exhaust emissions of smoke from each new aircraft gas turbine engine of class T8 manufactured on or after February 1, 1974, shall not exceed: Smoke number of 30.

(b) Exhaust emissions of smoke from each new aircraft gas turbine engine of class TF and of rated output of 129 kilonewtons thrust or greater, manufactured on or after January 1, 1976, shall not exceed:

$SN=83.6(r0)^{-0.274}$ (r0 is in kilonewtons).

(c) Exhaust emission of smoke from each new aircraft gas turbine engine of class T3 manufactured on or after January 1, 1978, shall not exceed: Smoke number of 25.

(d) Gaseous exhaust emissions from each new commercial aircraft gas turbine engine shall not exceed:

(1) Classes TF, T3, T8 engines greater than 26.7 kilonewtons rated output:

(i) Engines manufactured on or after January 1, 1984:

Hydrocarbons: 19.6 grams/kilonewton rO.

(ii) Engines manufactured on or after July 7, 1997.

Carbon Monoxide: 118 grams/kilonewton rO.

(iii) Engines of a type or model of which the date of manufacture of the first individual production model was on or before December 31, 1995 and for which the date of manufacture of the individual engine was on or before December 31, 1999.

Oxides of Nitrogen: (40 + 2(rPR)) grams/kilonewtons rO.

(iv) Engines of a type or model of which the date of manufacture of the first individual production model was after December 31, 1995 or for which the date of manufacture of the individual engine was after December 31, 1999:

Oxides of Nitrogen: (32 + 1.6(rPR)) grams/kilonewtons rO.

(v) The emission standards prescribed in paragraphs (d)(1) (iii) and (iv) of this section apply as prescribed beginning July 7, 1997.

(2) Class TSS: Engines manufactured on or after January 1, 1984:

Hydrocarbons=$140(0.92)^{rPR}$ grams/kilonewtons rO.

(e) Smoke exhaust emissions from each gas turbine engine of the classes specified below shall not exceed:

(1) Class TF of rated output less than 26.7 kilonewtons manufactured on or after (one year from date of publication):

$SN=83.6(ro)^{-0.274}$ (ro is in kilonewtons) not to exceed a maximum of SN=50.

(2) Classes T3, T8, TSS and TF of rated output equal to or greater than 26.7 kilonewtons manufactured on or after January 1, 1984:

$SN=83.6(ro)^{-0.274}$ (ro is in kilonewtons) not to exceed a maximum of SN=50.

(3) Class TP of rated output equal to or greater than 1,000 kilowatts manufactured on or after January 1, 1984:

$SN=187(ro)^{-0.168}$ (ro is in kilowatts)

(f) The standards set forth in paragraphs (a), (b), (c), (d), and (e) of this section refer to a composite gaseous emission sample representing the operating cycles set forth in the applicable sections of subpart G of this part, and exhaust smoke emissions emitted during operations of the engine as specified in the applicable sections of subpart H of this part, measured and calculated in accordance with the procedures set forth in those subparts.

[47 FR 58470, Dec. 30, 1982, as amended at 49 FR 31875, Aug. 9, 1984; 62 FR 25365, May 8, 1997]

Subpart D—Exhaust Emissions (In-Use Aircraft Gas Turbine Engines)

§ 87.30 Applicability.

The provisions of this subpart are applicable to all in-use aircraft gas turbine engines certified for operation within the United States of the classes specified beginning on the dates specified.

§ 87.31 Standards for exhaust emissions.

(a) Exhaust emissions of smoke from each in-use aircraft gas turbine engine of Class T8, beginning February 1, 1974, shall not exceed: Smoke number of 30.

(b) Exhaust emissions of smoke from each in-use aircraft gas turbine engine of class TF and of rated output of 129 kilonewtons thrust or greater, beginning January 1, 1976, shall not exceed:

$SN=83.6(r0)^{-0.274}$(r0 is in kilonewtons).

(c) The standards set forth in paragraphs (a) and (b) of this section refer to exhaust smoke emissions emitted during operations of the engine as specified in the applicable section of subpart H of this part, and measured and calculated in accordance with the procedures set forth in this subpart.

[47 FR 58470, Dec. 30, 1982, as amended at 48 FR 2718, Jan. 20, 1983]

Subparts E–F [Reserved]

Subpart G—Test Procedures for Engine Exhaust Gaseous Emissions (Aircraft and Aircraft Gas Turbine Engines)

§ 87.60 Introduction.

(a) Except as provided under § 87.5, the procedures described in this subpart shall be the test program to determine the conformity of new aircraft gas turbine engines with the applicable standards set forth in this part.

(b) The test consists of operating the engine at prescribed power settings on an engine dynamometer (for engines producing primarily shaft power) or thrust measuring test stand (for engines producing primarily thrust). The exhaust gases generated during engine operation are sampled continuously for specific component analysis through the analytical train.

(c) The exhaust emission test is designed to measure hydrocarbons, carbon monoxide, carbon dioxide, and oxides of nitrogen concentrations, and to determine mass emissions through calculations during a simulated aircraft landing-takeoff cycle (LTO). The LTO cycle is based on time in mode data during high activity periods at major airports. The test for propulsion engines consists of at least the following four modes of engine operation: taxi/idle, takeoff, climbout, and approach. The mass emission for the modes are combined to yield the reported values.

(d) When an engine is tested for exhaust emissions on an engine dynamometer or test stand, the complete engine shall be used with all accessories which might reasonably be expected to influence emissions to the atmosphere installed and functioning, if not otherwise prohibited by § 87.62(a)(2). Use of service air bleed and shaft power extraction to power auxiliary gearbox-mounted components required to drive aircraft systems is not permitted.

(e) Other gaseous emissions measurement systems may be used if shown to yield equivalent results and if approved in advance by the Administrator or the Secretary.

[47 FR 58470, Dec. 30, 1982, as amended at 49 FR 31875, Aug. 9, 1984; 62 FR 25366, May 8, 1997]

§ 87.61 Turbine fuel specifications.

For exhaust emission testing, fuel meeting the specifications listed in this section shall be used. Additives used for the purpose of smoke suppression (such as organometallic compounds) shall not be present.

Property and Allowable Range of Values

Density kg/m³ at 15 °C: 780–820.
Distillation temperature, °C: 10% boiling point, 155–201; final boiling point, 235–285.
Net heat of combustion, MJ/kg: 42.86–43.50.
Aromatics, volume %: 15–23.
Naphthalenes, volume %: 1.0–3.5.
Smoke point, mm: 20–28.
Hydrogen, mass %: 13.4–14.1.
Sulfur, mass %: less than 0.3%.
Kinematic viscosity at −20 °C, mm²/s: 2.5–6.5.

[62 FR 25366, May 8, 1997]

§ 87.62 Test procedure (propulsion engines).

(a)(1) The engine shall be tested in each of the following engine operating modes which simulate aircraft operation to determine its mass emission rates. The actual power setting, when corrected to standard day conditions, should correspond to the following percentages of rated output. Analytical correction for variations from reference day conditions and minor variations in actual power setting should be specified and/or approved by the Secretary:

Mode	Class		
	TP	TF, T3, T8	TSS
Taxi/idle	(1)	(1)	(1)
Takeoff	100	100	100
Climbout	90	85	65
Descent	NA	NA	15
Approach	30	30	34

[1] See paragraph (a)(2) of this section.

(2) The taxi/idle operating modes shall be carried out at a power setting of 7% rated thrust unless the Secretary determines that the unique characteristics of an engine model undergoing certification testing at 7% would result in substantially different HC and CO emissions than if the engine model were tested at the manufacturers recommended idle power setting. In such cases the Secretary shall specify an alternative test condition.

(3) The times in mode (TIM) shall be as specified below:

Mode	Class		
	TP	TF, T3 or T8	TSS
Taxi/idle (minutes)	26.0	26.0	26.0
Takeoff	0.5	0.7	1.2
Climbout	2.5	2.2	2.0
Descent	N/A	N/A	1.2
Approach	4.5	4.0	2.3

(b) Emissions testing shall be conducted on warmed-up engines which have achieved a steady operating temperature.

[47 FR 58470, Dec. 30, 1982, as amended at 62 FR 25366, May 8, 1997]

§ 87.63 [Reserved]

§ 87.64 Sampling and analytical procedures for measuring gaseous exhaust emissions.

The system and procedures for sampling and measurement of gaseous emissions shall be as specified by Appendices 3 and 5 to International Civil Aviation Organization (ICAO) Annex 16, Environmental Protection, Volume II, Aircraft Engine Emissions, Second Edition, July 1993, which are incorporated herein by reference. This incorporation by reference was approved by the Director of the Federal Register in accordance with 5 U.S.C. 552(a) and 1 CFR part 51. These materials are incorporated as they exist on the date of the approval and a notice of any change in these materials will be published in the FEDERAL REGISTER. Frequent changes are not anticipated. Copies may be inspected at U.S. EPA, OAR, 401 M St., SW., Washington, DC 20460, or at the Office of the Federal Register, 800 North Capitol Street, NW., suite 700, Washington, DC. Copies of this document can be obtained from the International Civil Aviation Organization (ICAO), Document Sales Unit, P.O. Box 400, Succursale: Place de L'Aviation Internationale, 1000 Sherbrooke Street West, Suite 400, Montreal, Quebec, Canada H3A 2R2.

[62 FR 25366, May 8, 1997]

§§ 87.65–87.70 [Reserved]

§ 87.71 Compliance with gaseous emission standards.

Compliance with each gaseous emission standard by an aircraft engine shall be determined by comparing the pollutant level in grams/kilonewton/thrust/cycle or grams/kilowatt/cycle as calculated in § 87.64 with the applicable emission standard under this part. An acceptable alternative to testing every engine is described in Appendix 6 to International Civil Aviation Organization (ICAO) Annex 16, Environmental Protection, Volume II, Aircraft Engine Emissions, Second Edition, July 1993, which is incorporated herein by reference. This incorporation by reference was approved by the Director of the Federal Register in accordance with 5 U.S.C. 552(a) and 1 CFR part 51. These materials are incorporated as they exist on the date of the approval and a notice of any change in these materials will be published in the FEDERAL REGISTER. Frequent changes are not anticipated. Copies may be inspected at U.S. EPA, OAR, 401 M St., SW., Washington, DC 20460, or at the Office of the Federal Register, 800 North Capitol Street, NW., suite 700, Washington, DC. Copies of this document can be obtained from the International Civil Aviation Organization (ICAO), Document Sales Unit, P.O. Box 400, Succursale: Place de L'Aviation Internationale, 1000 Sherbrooke Street West, Suite 400, Montreal, Quebec, Canada H3A 2R2. Other methods of demonstrating compliance may be approved by the Secretary with the concurrence of the Administrator.

[62 FR 25366, May 8, 1997]

Subpart H—Test Procedures for Engine Smoke Emissions (Aircraft Gas Turbine Engines)

§ 87.80 Introduction.

Except as provided under §87.5, the procedures described in this subpart shall be the test program to determine the conformity of new and in-use gas turbine engines with the applicable standards set forth in this part. The test is essentially the same as that described in §§ 87.60 through 87.62, except that the test is designed to determine the smoke emission level at various operating points representative of engine usage in aircraft. Other smoke measurement systems may be used if shown

to yield equivalent results and if approved in advance by the Administrator or the Secretary.

§ 87.81 Fuel specifications.

Fuel having specifications as provided in § 87.61 shall be used in smoke emission testing.

§ 87.82 Sampling and analytical procedures for measuring smoke exhaust emissions.

The system and procedures for sampling and measurement of smoke emissions shall be as specified by Appendix 2 to International Civil Aviation Organization (ICAO) Annex 16, Volume II, Environmental Protection, Aircraft Engine Emissions, Second Edition, July 1993, which are incorporated herein by reference. This incorporation by reference was approved by the Director of the Federal Register in accordance with 5 U.S.C. 552(a) and 1 CFR part 51. These materials are incorporated as they exist on the date of the approval and a notice of any change in these materials will be published in the FEDERAL REGISTER. Frequent changes are not anticipated. Copies may be inspected at U.S. EPA, OAR, 401 M St., SW., Washington, DC 20460, or at the Office of the Federal Register, 800 North Capitol Street, NW., suite 700, Washington, DC. Copies of this document can be obtained from the International Civil Aviation Organization (ICAO), Document Sales Unit, P.O. Box 400, Succursale: Place de L'Aviation Internationale, 1000 Sherbrooke Street West, Suite 400, Montreal, Quebec, Canada H3A 2R2.

[62 FR 25366, May 8, 1997]

§§ 87.83–87.88 [Reserved]

§ 87.89 Compliance with smoke emission standards.

Compliance with each smoke emission standard shall be determined by comparing the plot of SN as a function of power setting with the applicable emission standard under this part. The SN at every power setting must be such that there is a high degree of confidence that the standard will not be exceeded by any engine of the model being tested. An acceptable alternative to testing every engine is described in Appendix 6 to International Civil Aviation Organization (ICAO) Annex 16, Environmental Protection, Volume II, Aircraft Engine Emissions, Second Edition, July 1993, which is incorporated herein by reference. This incorporation by reference was approved by the Director of the Federal Register in accordance with 5 U.S.C. 552(a) and 1 CFR part 51. These materials are incorporated as they exist on the date of the approval and a notice of any change in these materials will be published in the FEDERAL REGISTER. Frequent changes are not anticipated. Copies may be inspected at U.S. EPA, OAR, 401 M St., SW., Washington, DC 20460, or at the Office of the Federal Register, 800 North Capitol Street, NW., suite 700, Washington, DC. Copies of this document can be obtained from the International Civil Aviation Organization (ICAO), Document Sales Unit, P.O. Box 400, Succursale: Place de L'Aviation Internationale, 1000 Sherbrooke Street West, Suite 400, Montreal, Quebec, Canada H3A 2R2.

[62 FR 25366, May 8, 1997]

PART 88—CLEAN-FUEL VEHICLES

Subpart A—Emission Standards for Clean-Fuel Vehicles

Sec.
88.101–94 General applicability.
88.102–94 Definitions.
88.103–94 Abbreviations.
88.104–94 Clean–fuel vehicle tailpipe emission standards for light–duty vehicles and light–duty trucks.
88.105–94 Clean–fuel fleet emission standards for heavy–duty engines.

Subpart B—California Pilot Test Program

88.201–94 Scope.
88.202–94 Definitions.
88.203–94 Abbreviations.
88.204–94 Sales requirements for the California Pilot Test Program.
88.205–94 California Pilot Test Program Credits Program.
88.206–94 State opt–in for the California Pilot Test Program.
TABLES TO SUBPART B OF PART 88

Subpart C—Clean-Fuel Fleet Program

88.301–93 General applicability.
88.302–93 Definitions.
88.302–94 Definitions.

88.303–93 Abbreviations.
88.304–94 Clean-fuel Fleet Vehicle Credit Program.
88.305–94 Clean–fuel fleet vehicle labeling requirements for heavy–duty vehicles.
88.306–94 Requirements for a converted vehicle to qualify as a clean–fuel fleet vehicle.
88.307–94 Exemption from temporal transporation control measures for CFFVs.
88.308–94 Programmatic requirements for clean–fuel fleet vehicles.
88.309 [Reserved]
88.310–94 Applicability to covered Federal fleets.
88.311–93 Emissions standards for Inherently Low-Emission Vehicles.
88.311–98 Emissions standards for Inherently Low-Emission Vehicles.
88.312–93 Inherently Low-Emission Vehicle labeling.
88.313–93 Incentives for the purchase of Inherently Low-Emission Vehicles.
TABLES TO SUBPART C OF PART 88

AUTHORITY: 42 U.S.C. 7410, 7418, 7581, 7582, 7583, 7584, 7586, 7588, 7589, 7601(a).

SOURCE: 57 FR 60046, Dec. 17, 1992, unless otherwise noted.

Subpart A—Emission Standards for Clean-Fuel Vehicles

§ 88.101–94 General applicability.

The clean-fuel vehicle standards and provisions of this subpart are applicable to vehicles used in subpart B of this part (the Clean Fuel Fleet Program) and subpart C of this part (the California Pilot Test Program).

[59 FR 50074, Sept. 30, 1994]

§ 88.102–94 Definitions.

Any terms defined in 40 CFR part 86 and not defined in this part shall have the meaning given them in 40 CFR part 86, subpart A.

Adjusted Loaded Vehicle Weight is defined as the numerical average of the vehicle curb weight and the GVWR.

Dual Fuel Vehicle (or Engine) means any motor vehicle (or motor vehicle engine) engineered and designed to be operated on two different fuels, but not on a mixture of the fuels.

Flexible Fuel Vehicle (or Engine) means any motor vehicle (or motor vehicle engine) engineered and designed to be operated on any mixture of two or more different fuels.

Heavy Light-Duty Truck means any light-duty truck rated greater than 6000 lbs. GVWR.

Light Light-Duty Truck means any light-duty truck rated through 6000 lbs GVWR.

Loaded Vehicle Weight is defined as the curb weight plus 300 lbs.

Low-Emission Vehicle means any light-duty vehicle or light-duty truck conforming to the applicable Low-Emission Vehicle standard, or any heavy-duty vehicle with an engine conforming to the applicable Low-Emission Vehicle standard.

Non-methane Hydrocarbon Equivalent means the sum of the carbon mass emissions of non-oxygenated non-methane hydrocarbons plus the carbon mass emissions of alcohols, aldehydes, or other organic compounds which are separately measured in accordance with the applicable test procedures of 40 CFR part 86, expressed as gasoline-fueled vehicle non-methane hydrocarbons. In the case of exhaust emissions, the hydrogen-to-carbon ratio of the equivalent hydrocarbon is 1.85:1. In the case of diurnal and hot soak emissions, the hydrogen-to-carbon ratios of the equivalent hydrocarbons are 2.33:1 and 2.2:1 respectively.

Non-methane Organic Gas is defined as in section 241(3) Clean Air Act as amended (42 U.S.C. 7581(3)).

Test Weight is defined as the average of the curb weight and the GVWR.

Transitional Low-Emission Vehicle means any light-duty vehicle or light-duty truck conforming to the applicable Transitional Low-Emission Vehicle standard.

Ultra Low-Emission Vehicle means any light-duty vehicle or light-duty truck conforming to the applicable Ultra Low-Emission Vehicle standard, or any heavy-duty vehicle with an engine conforming to the applicable Ultra Low-Emission Vehicle standard.

Zero-Emission Vehicle means any light-duty vehicle or light-dutytruck conforming to the applicable Zero-Emission Vehicle standard, or any heavy-duty vehicle conforming to the applicable Zero-Emission Vehicle standard.

[57 FR 60046, Dec. 17, 1992. Redesignated and amended at 59 FR 50074, Sept. 30, 1994]

§ 88.103–94 Abbreviations.

The abbreviations of part 86 also apply to this subpart. The abbreviations in this section apply to all of part 88.

ALVW—Adjusted Loaded Vehicle Weight
CO—Carbon Monoxide
HCHO—Formaldehyde
HC—Hydrocarbon
HDV—Heavy-Duty Vehicle
LDT—Light-Duty Truck
LDV—Light-Duty Vehicle
NMHC—Non-Methane Hydrocarbon
NMHCE—Non-Methane Hydrocarbon Equivalent
NMOG—Non-Methane Organic Gas
NOx—Nitrogen Oxides
PM—Particulate Matter
GVWR—Gross Vehicle Weight Rating
LVW—Loaded Vehicle Weight
TW—Test Weight
TLEV—Transitional Low-Emission Vehicle
LEV—Low-Emission Vehicle
ULEV—Ultra Low-Emission Vehicle
ZEV—Zero-Emission Vehicle

[57 FR 60046, Dec. 17, 1992. Redesignated and amended at 59 FR 50074, Sept. 30, 1994]

§ 88.104–94 Clean-fuel vehicle tailpipe emission standards for light-duty vehicles and light-duty trucks.

(a) A light-duty vehicle or light-duty truck will be considered as a TLEV, LEV, ULEV, or ZEV if it meets the applicable requirements of this section.

(b) Light-duty vehicles certified to the exhaust emission standards for TLEVs, LEVs, and ULEVs in Tables A104–1 and A104–2 shall be considered as meeting the requirements of this section for that particular vehicle emission category for model years 1994–2000 for the California Pilot Program.

(c) Light-duty vehicles certified to the exhaust emission standards for LEVs and ULEVs in Tables A104–1 and A104–2 shall be considered as meeting the requirements of this section for that particular vehicle emission category for model years 2001 and later for the California Pilot Program, and for model years 1998 and later for the Clean Fuel Fleet Program.

(d) Light light-duty trucks certified to the exhaust emission standards for a specific weight category for TLEVs, LEVs, and ULEVs in Tables A104–3 and A104–4 shall be considered as meeting the requirements of this section for that particular vehicle emission category. For model years 1994–2000 for the California Pilot Program.

(e) Light Light-duty trucks certified to the exhaust emission standards for a specific weight category for LEVs and ULEVs in Tables A104–3 and A104–4 shall be considered as meeting the requirements of this section for that particular vehicle emission category. For model years 2001 and later for the California Pilot Program, and for model years 1998 and later for the Clean Fuel Fleet Program.

(f) Heavy light-duty trucks certified to the exhaust emission standards for a specific weight category of LEVs and ULEVs in Tables A104–5 and A104–6 for model years 1998 and later shall be considered as meeting the requirements of this section for that particular vehicle emission category.

(g) A light-duty vehicle or light-duty truck shall be certified as a ZEV if it is determined by engineering analysis that the vehicle satisfies the following conditions:

(1) The vehicle fuel system(s) must not contain either carbon or nitrogen compounds (including air) which, when burned, form any of the pollutants listed in Table A104–1 as exhaust emissions.

(2) All primary and auxiliary equipment and engines must have no emissions of any of the pollutants listed in Table A104–1.

(3) The vehicle fuel system(s) and any auxiliary engine(s) must have no evaporative emissions in use.

(4) Any auxiliary heater must not operate at ambient temperatures above 40 degrees Fahrenheit.

(h) *NMOG standards for flexible- and dual-fueled vehicles when operating on clean alternative fuel*—(1) *Light-duty vehicles, and light light-duty trucks.* Flexible- and dual-fueled LDVs and light LDTs of 1996 model year and later shall meet all standards in Table A104–7 for vehicles of the applicable model year, loaded vehicle weight, and vehicle emission category.

(2) *Light-duty trucks above 6,000 lbs GVWR.* Flexible- and dual-fueled LDTs above 6,000 lbs. GVWR of 1998 model year and later shall meet all standards in Table A104–8 for vehicles of the applicable test weight and vehicle emission category.

(i) *NMOG standards for flexible- and dual-fueled vehicles when operating on conventional fuel*—(1) *Light-duty vehicles, and light light-duty trucks.* Flexible- and dual-fueled LDVs and light LDTs of 1996 model year and later shall meet all standards in Table A104–9 for vehicles of the applicable model year, loaded vehicle weight, and vehicle emission category.

(2) *Light-duty trucks above 6,000 lbs GVWR.* Flexible- and dual-fueled LDTs of 1998 model year and later shall meet all standards in Table A104–10 for vehicles of the applicable test weight and vehicle emission category.

(j) *Other standards for flexible- and dual-fueled vehicles.* When operating on clean alternative fuel, flexible- and dual- fueled light-duty vehicles and light light-duty trucks must also meet the appropriate standards for carbon monoxide, oxides of nitrogen, formaldehyde, and particulate matter as designated in paragraphs (a) through (f) of this section as well as all other applicable standards and requirements. When operating on conventional fuel, flexible- and dual-fueled vehicles must also meet all other applicable standards and requirements in 40 CFR part 86.

(k) Motor vehicles subject to standards and requirements of this section shall also comply with all applicable standards and requirements of 40 CFR part 86, except that any exhaust emission standards in 40 CFR part 86 pertaining to pollutants for which standards are established in this section shall not apply. For converted vehicles, the applicable standards and requirements of 40 CFR part 86 and this part 88 shall apply based on the model year in which the conversion is performed, regardless of the model year in which the base vehicle was originally manufactured prior to conversion.

(1) Gaseous-fueled, diesel-fueled, and electric clean-fuel vehicles are waived from cold CO test requirements of subpart C of this part if compliance is demonstrated by engineering analysis or test data.

(2) The standards in this section shall be administered and enforced in accordance with the California Regulatory Requirements Applicable to the Clean Fuel Fleet and California Pilot Programs, April 1, 1994, which are incorporated by reference.

(i) This incorporation by reference was approved by the Director of the Federal Register in accordance with 5 U.S.C. 552(a) and 1 CFR part 51.

(ii) Copies may be inspected at U.S. EPA, OAR, 401 M St., SW., Washington, DC 20460, or at the Office of the Federal Register, 800 North Capitol Street, NW., suite 700, Washington, DC. Copies of these materials may be obtained from Barclay's Law Publishers, 400 Oyster Point Boulevard, P.O. Box 3066, South San Francisco, CA 94080, phone (415) 244–6611.

TABLES TO § 88.104–94

TABLE A104–1—INTERMEDIATE USEFUL LIFE STANDARDS (G/MI) FOR LIGHT-DUTY VEHICLES FOR HCS, CO, NO_X, HCHO, AND PM

Vehicle emission category	NMOG	CO	NO_X	HCHO	PM [1]
TLEV	0.125	3.4	0.4	0.015	.....
LEV	[2] .075	[2] 3.4	.2	[2] .015	.....
ULEV	.040	1.7	[2] .2	.008	.....

[1] Applies to diesel vehicles only.
[2] Applies to ILEVs.

TABLE A104–2—FULL USEFUL LIFE STANDARDS (G/MI) FOR LIGHT-DUTY VEHICLES FOR HCS, CO, NO_X, HCHO, AND PM

Vehicle emission category	NMOG	CO	NO_X	HCHO	PM [1]
TLEV	0.156	4.2	0.6	0.018	0.08
LEV	[2] 0.090	[2] 4.2	.3	[2] .018	[2] .08
ULEV	.055	2.1	[2] .3	.011	.04

[1] Applies to diesel vehicles only.

[2] Applies to ILEVs.

TABLE A104–3—INTERMEDIATE USEFUL LIFE STANDARDS (G/MI) FOR LIGHT LIGHT-DUTY TRUCKS FOR HCS, CO, NO_X, HCHO, AND PM

LVW (lbs)	Vehicle emission category	NMOG	CO	NO_X	HCHO	PM [1]
0–3750	TLEV	.125	3.4	.4	.015	.....
	LEV	[2] .075	[2] 3.4	.2	[2] .015	.....
	ULEV	.040	1.7	[2] .2	.008	.....
3751–5750	TLEV	0.160	4.4	.7	.018	.....
	LEV	[2] .100	[2] 4.4	.4	[2] .018	.....
	ULEV	.050	2.2	[2] .4	.009	.....

[1] Applies to diesel vehicles only.
[2] Applies to ILEVs.

TABLE A104–4—FULL USEFUL LIFE STANDARDS (G/MI) FOR LIGHT LIGHT-DUTY TRUCKS FOR HCS, CO, NO_X, HCHO, AND PM

LVW (lbs)	Vehicle emission category	NMOG	CO	NO_X	HCHO	PM[1]
0–3750	TLEV	0.156	4.2	0.6	0.018	0.08
	LEV	[2] 0.090	[2] 4.2	0.3	[2] .018	[2] .08
	ULEV	.055	2.1	[2] .3	.011	.04
3751–5750	TLEV	.200	5.5	.9	.023	.08
	LEV	[2] .130	[2] 5.5	.5	[2] .023	[2] .08
	ULEV	.070	2.8	[2] .5	.013	.04

[1] Applies to diesel vehicles only.
[2] Applies to ILEVs.

TABLE A104–5—INTERMEDIATE USEFUL LIFE STANDARDS (G/MI) FOR HEAVY LIGHT-DUTY TRUCKS FOR HCS, CO, NO_X, HCHO, AND PM

ALVW (lbs)	Vehicle emission category	NMOG	CO	NO_X[2]	HCHO	PM[1]
0–3750	LEV	[3] 0.125	[3] 3.4	0.4	[3] 0.015	
	ULEV	.075	1.7	[3] .2	.008	
3751–5750	LEV	[3] .160	[3] 4.4	.7	[3] .018	
	ULEV	.100	2.2	[3] .4	.009	
5751–	LEV	[3] .195	[3] 5.0	1.1	[3] .022	
	ULEV	.117	2.5	[3] .6	.011	

[1] Applies to diesel vehicles only.
[2] Does not apply to diesel vehicles.
[3] Applies to ILEVs.

TABLE A104–6—FULL USEFUL LIFE STANDARDS (G/MI) FOR HEAVY LIGHT-DUTY TRUCKS FOR HCS, CO, NO_X, HCHO, AND PM

ALVW (lbs)	Vehicle emission category	NMOG	CO	NO_X	HCHO	PM[1]
0–3750	LEV	[2] 0.180	[2] 5.0	0.6	[2] 0.022	[2] 0.08
	ULEV	.107	2.5	[2] .3	.012	.04
3751–5750	LEV	[2] .230	[2] 6.4	1.0	[2] .027	[2] .10
	ULEV	.143	3.2	[2] .5	.013	.05
5751–	LEV	[2] .280	[2] 7.3	1.5	[2] .032	[2] .12
	ULEV	.167	3.7	[2] .8	.016	.06

[1] Applies to diesel vehicles only.
[2] Applies to ILEVs.

TABLE A104–7—NMOG STANDARDS (G/MI) FOR FLEXIBLE- AND DUAL-FUELED VEHICLES WHEN OPERATING ON CLEAN ALTERNATIVE FUEL FOR LIGHT LIGHT-DUTY TRUCKS AND LIGHT-DUTY VEHICLES

Vehicle type	50,000 mile NMOG standard	100,000 mile NMOG standard
MY 1996 and later:		
LDTs (0–3,750 lbs. LVW) and LDVs	0.125	0.156
LDTs (3,751–5,750 lbs. LVW)	.160	.200
Beginning MY 2001:		
LDTs (0–3,750 lbs. LVW) and LDVs	.075	.090

TABLE A104–7—NMOG STANDARDS (G/MI) FOR FLEXIBLE- AND DUAL-FUELED VEHICLES WHEN OPERATING ON CLEAN ALTERNATIVE FUEL FOR LIGHT LIGHT-DUTY TRUCKS AND LIGHT-DUTY VEHICLES—Continued

Vehicle type	50,000 mile NMOG standard	100,000 mile NMOG standard
LDTs (3,751–5,750 lbs. LVW)	.100	.130

TABLE A104–8—NMOG STANDARDS (G/MI) FOR FLEXIBLE- AND DUAL-FUELED VEHICLES WHEN OPERATING ON CLEAN ALTERNATIVE FUEL FOR HEAVY LIGHT-DUTY TRUCKS

Vehicle type	50,000 mile NMOG standard	120,000 mile NMOG standard
Beginning MY 1998:		
LDTs (0–3,750 lbs. ALVW)	0.125	0.180
LDTs (3,751–5,750 lbs. ALVW)	.160	.230
LDTs (5,751–8,500 lbs. ALVW)	.195	.280

TABLE A104–9—NMOG STANDARDS (G/MI) FOR FLEXIBLE- AND DUAL-FUELED VEHICLES WHEN OPERATING ON CONVENTIONAL FUEL FOR LIGHT LIGHT-DUTY TRUCKS AND LIGHT-DUTY VEHICLES

Vehicle type	50,000 mile NMOG standard	100,000 mile NMOG standard
Beginning MY 1996:		
LDTs (0–3,750 lbs. LVW) and LDVs	0.25	0.31
LDTs (3,751–5,750 lbs. LVW)	.32	.40
Beginning MY 2001:		
LDTs (0–3,750 lbs. LVW) and LDVs	.125	.156
LDTs (3,751–5,750 lbs. LVW)	.160	.200

TABLE A104–10—NMOG STANDARDS (G/MI) FOR FLEXIBLE- AND DUAL-FUELED VEHICLES WHEN OPERATING ON CONVENTIONAL FUEL FOR LIGHT LIGHT-DUTY TRUCKS

Vehicle type	50,000 mile NMOG standard	120,000 mile NMOG standard
Beginning MY 1998:		
LDTs (0–3,750 lbs. ALVW)	0.25	0.36
LDTs (3,751–5,750 lbs. ALVW)	.32	.46
LDTs (5,751–8,500 lbs. ALVW)	.39	.56

[59 FR 50074, Sept. 30, 1994, as amended at 61 FR 127, Jan. 3, 1996]

§ 88.105–94 Clean-fuel fleet emission standards for heavy-duty engines.

(a) Exhaust emissions from engines used in heavy-duty low emission vehicles shall meet one of the following standards:

(1) Combined emissions of oxides of nitrogen and nonmethane hydrocarbons (or nonmethane hydrocarbon equivalent) shall not exceed 3.8 grams per brake horsepower-hour.

(2) Combined emissions of oxides of nitrogen and nonmethane hydrocarbons (or nonmethane hydrocarbon equivalent) shall not exceed 3.5 grams per brake horsepower-hour when tested (certified) on fuel meeting the specifications of California certification fuel.

(b) Exhaust emissions from engines used in heavy-duty low emission vehicles shall meet conventional vehicle standards set forth in Part 86 for total hydrocarbon, carbon monoxide, particulate, and organic material hydrocarbon equivalent.

(c) Exhaust emissions from engines used in ultra-low emission heavy-duty vehicles shall meet each of the following standards:

(1) The combined emissions of oxides of nitrogen and nonmethane hydrocarbons (or nonmethane hydrocarbon equivalent) shall not exceed 2.5 grams per brake horsepower-hour.

(2) Carbon monoxide emissions shall not exceed 7.2 grams per brake horsepower-hour.

(3) Particulate emissions shall not exceed 0.05 grams per brake horsepower-hour.

(4) Formaldehyde emissions shall not exceed 0.025 grams per brake horsepower-hour.

(d) Exhaust emissions from engines used in inherently-low emission heavy-duty vehicles shall meet each of the following standards:

(1) The combined emissions of oxides of nitrogen and nonmethane hydrocarbons (or nonmethane hydrocarbon equivalent) shall not exceed 2.5 grams per brake horsepower-hour.

(2) Carbon monoxide emissions shall not exceed 14.4 grams per brake horsepower-hour.

(3) Particulate emissions shall not exceed 0.10 grams per brake horsepower-hour.

(4) Formaldehyde emissions shall not exceed 0.05 grams per brake horsepower-hour.

(e) The standards set forth in paragraphs (a), (b), (c), and (d) of this section refer to the exhaust emitted while the vehicle is being tested in accordance with the applicable test procedures set forth in 40 CFR part 86, subpart N.

(f)(1) A heavy-duty zero-emission vehicle (ZEV) has a standard of zero emissions for nonmethane hydrocarbons, oxides of nitrogen, carbon monoxide, formaldehyde, and particulates.

(2) A heavy-duty vehicle shall be certified as a ZEV if it is determined by engineering analysis that the vehicle satisfies the following conditions:

(i) The vehicle fuel system(s) must not contain either carbon or nitrogen compounds (including air) which, when burned, form nonmethane hydrocarbons, oxides of nitrogen, carbon monoxide, formaldehyde, or particulates as exhaust emissions.

(ii) All primary and auxiliary equipment and engines must have no emissions of nonmethane hydrocarbons, oxides of nitrogen, carbon monoxide, formaldehyde, and particulates.

(iii) The vehicle fuel system(s) and any auxiliary engine(s) must have no evaporative emissions.

(iv) Any auxiliary heater must not operate at ambient temperatures above 40 degrees Fahrenheit.

(g) All heavy-duty engines used in low emission, ultra-low emission, or zero emission vehicles shall also comply with all applicable standards and requirements of 40 CFR part 86, except that any exhaust emission standards in 40 CFR part 86 pertaining to pollutants for which standards are established in this section shall not apply.

[59 FR 50077, Sept. 30, 1994]

Subpart B—California Pilot Test Program

§ 88.201–94 Scope.

Applicability. The requirements of this subpart shall apply to the following:

(a) State Implementation Plan revisions for the State of California and other states pursuant to compliance with section 249 of the Clean Air Act, as amended in 1990.

(b) Vehicle manufacturers with sales in the State of California.

[57 FR 60046, Dec. 17, 1992, as amended at 59 FR 50077, Sept. 30, 1994]

§ 88.202–94 Definitions.

(a) The definitions in subpart A also apply to this subpart.

(b) The definitions in this subpart shall apply beginning with the 1992 model year.

Averaging for clean-fuel vehicles means the sale of clean-fuel vehicles that meet more stringent standards than required, which allows the manufacturer to sell fewer clean-fuel vehicles than would otherwise be required.

Banking means the retention of credits, by the manufacturer generating the emissions credits, for use in future model-year certification as permitted by regulation.

Sales means vehicles that are produced, sold, and distributed (in accordance with normal business practices and applicable franchise agreements) in the State of California, including

owners of covered fleets under subpart C of part 86 of this chapter. The manufacturer can choose at their option from one of the following three methods for determining sales:

(i) Sales is defined as sales to the ultimate purchaser.

(ii) Sales is defined as vehicle sales by a manufacturer to a dealer, distributer, fleet operator, broker, or any other entity which comprises the first point of sale.

(iii) Sales is defined as equivalent to the production of vehicles for the state of California. This option can be revoked if it is determined that the production and actual sales numbers do not exhibit a functional equivalence per the language of § 86.708–94(b)(1) of this chapter.

Trading means the exchange of credits between manufacturers.

§ 88.203–94 Abbreviations.

The abbreviations in subpart A of this part and in 40 CFR part 86 apply to this subpart.

§ 88.204–94 Sales requirements for the California Pilot Test Program.

(a) The total annual required minimum sales volume of new clean fuel vehicles in California for this program shall correspond to Table B204.

(b) (1) When manufacturers of vehicles subject to the regulations of this section file a report pursuant to 40 CFR 86.085–37(b), such report shall include the following information: the number of light-duty vehicles and light-duty trucks sold only in California, and the number of clean-fuel vehicles sold for the Pilot program beginning with model year 1996.

(2) For model years 1996 and 1997, manufacturers may exclude heavy light-duty trucks from the reporting required by this section.

(c) (1) Except as provided in paragraph (d) of this section, each vehicle manufacturer must sell clean-fuel vehicles in California in an amount equal to the required annual sales volume calculated in paragraph (c)(2) of this section.

(2) The required annual clean fuel vehicle sales volume for a given manufacturer is expressed in the following equation rounded to the nearest whole number:

$$\mathrm{RMS} = \frac{\mathrm{MS}}{\mathrm{TS}} \times \mathrm{TCPPS}$$

Where:

RMS = a manufacturer's required sales in a given model year.

MS = the average of a manufacturer's total LDV and light LDT sales in California three and four model years earlier than year in question (for MY 1996 and 1997 RMS calculations).

= the average of a manufacturer's total LDV and LDT sales in California three and four model years earlier than year in question (for MY 1998 and later RMS calculations).

TS = the average of total LDV and light LDT sales in California of all manufacturers three and four model years earlier than the year in question (for MY 1996 and 1997 RMS calculations). Sales of manufacturers which meet the criteria of (d) of this paragraph will not be included.

= the average of total LDV and LDT sales in California of all manufacturers three and four model years earlier than the year in question (for MY 1998 and later RMS calculations). Sales of manufacturers which meet the criteria of (d) of this paragraph will not be included.

TCPPS = Pilot program annual CFV sales requirement (either 150,000 or 300,000) for the model year in question.

(i) A manufacturer's share of required annual sales for model years 1996 and 1997 will be based on LDV and light LDT sales only. Once the heavy LDT standards are effective beginning with model year 1998, a manufacturer's required sales share will be based on all LDV and LDT sales.

(ii) A manufacturer certifying for the first time in California shall calculate annual required sales share based on projected California sales for the model year in question. In the second year, the manufacturer shall use actual sales from the previous year. In the third year, the manufacturer will use sales from two model years prior to the year in question. In the fourth year, the manufacturer will use sales from three years prior to the year in question. In the fifth year and subsequent years, the manufacturer will use average sales from three and four years prior to the year in question.

(d) (1) Small volume manufacturer is defined in the Pilot program as one

whose average annual LDV and LDT sales in California are less than or equal to 3,000 units during a consecutive three-year period beginning no earlier than model year 1993.

(i) A manufacturer with less than three consecutive years of sales in California shall use a single year of sales or, if available, the average of two years of sales in California to determine whether they fall at or below the threshold of 3,000 units.

(ii) A manufacturer certifying for the first time in California shall be considered a small volume manufacturer if their projected California sales level is at or below 3,000 units for a given year. Once the manufacturer has actual sales data for one year, this actual sales data shall be used to determine whether the manufacturer qualifies as a small volume manufacturer.

(iii) A manufacturer which does not qualify as a small volume manufacturer in model year 1996 but whose average annual LDV and LDT sales fall to or below the 3,000 unit threshold between 1996 and 2001 shall be treated as a small volume manufacturer and shall be subject to requirements for small volume manufacturers as specified in paragraph (d)(2) of this section beginning with the next model year.

(2) A manufacturer which qualifies as a small volume manufacturer prior to model year 2001 is not required to comply with the sales requirements of this section until model year 2001.

TABLE B204—PILOT PROGRAM VEHICLE SALES SCHEDULE

Model years	Vehicle types	Required annual sales
1996 and 1997	LDTs (< 6000 GVWR and ≤5750 LVW); and LDVs.	150,000
1998	All Applicable Vehicle Types	150,000
1999+	All Applicable Vehicle Types	300,000

[59 FR 50078, Sept. 30, 1994, as amended at 61 FR 127, Jan. 3, 1996]

§ 88.205–94 California Pilot Test Program Credits Program.

(a) *General.* (1) The Administrator shall administer this credit program to enable vehicle manufacturers who are required to participate in the California Pilot Test Program to meet the clean-fuel vehicle sales requirements through the use of credits. Participation in this credit program is voluntary.

(2) All credit-generating vehicles must meet the applicable emission standards and other requirements contained in subpart A of this part.

(b) *Credit generation.* (1) Credits may be generated by any of the following means:

(i) Sale of qualifying clean-fuel vehicles earlier than required. Manufacturers may earn these credits starting with the 1992 model year, contingent upon the requirements of paragraph (g) of this section.

(ii) Sale of a greater number of qualifying clean-fuel vehicles than required.

(iii) Sale of qualifying clean-fuel vehicles that meet more stringent emission standards than those required.

(2) For light-duty vehicles and light-duty trucks, credit values shall be determined in accordance with the following:

(i) For model-years through 2000, credit values shall be determined in accordance with table B–1 of this subpart.

(ii) For the 2001 and subsequent model-years, credit values shall be determined according to table B–2 of this subpart. The sale of light-duty vehicles classified as Transitional Low-Emission Vehicles shall not receive credits starting in model year 2001.

(iii) For the calculation of credits for the sale of more clean-fuel vehicles than required, the manufacturer shall designate which sold vehicles count toward compliance with the sales requirement. The remaining balance of vehicles will be considered as sold beyond the sales requirement for credit calculations.

(3) Vehicles greater than 8500 lbs gvwr may not generate credits.

(c) *Credit use.* (1) All credits generated in accordance with these provisions may be freely averaged, traded, or banked for later use. Credits may not be used to remedy any nonconformity determined by enforcement testing.

(2) There is one averaging and trading group containing all light-duty vehicles and light-duty trucks.

(3) A vehicle manufacturer desiring to demonstrate full or partial compliance with the sales requirements by

the redemption of credits, shall surrender sufficient credits, as established in this paragraph (c). In lieu of selling a clean-fuel vehicle, a manufacturer shall surrender credits equal to the credit value for the corresponding vehicle class and model year found in table B–1.3 or table B–2.3 of this subpart.

(d) *Participation in the credit program.* (1) During certification, the manufacturer shall calculate the projected credits, if any, based on required sales projections.

(2) Based on information from paragraph (d)(1) of this section, each manufacturer's certification application under this section must demonstrate:

(i) That at the end of the model-year production, there is a net vehicle credit balance of zero or more with any credits obtained from averaging, trading, or banking.

(ii) It is recommended but not required that the source of the credits to be used to comply with the minimum sales requirements be stated. All such reports should include all credits involved in averaging, trading, or banking.

(3) During the model year, manufacturers must:

(i) Monitor projected versus actual production to be certain that compliance with the sales requirement is achieved at the end of the model year.

(ii) Provide the end of model year reports required under this subpart.

(iii) Maintain the records required under this subpart.

(4) Projected credits based on information supplied in the certification application may be used to obtain a certificate of conformity. However, any such credits may be revoked based on review of end-of-model year reports, follow-up audits, and any other verification steps deemed appropriate by the Administrator.

(5) Compliance under averaging, banking, and trading will be determined at the end of the model year.

(6) If EPA or the manufacturer determines that a reporting error occurred on an end-of-year report previously submitted to EPA under this section, the manufacturer's credits and credit calculations will be recalculated.

(i) If EPA review of a manufacturer's end-of-year report indicates an inadvertent credit shortfall, the manufacturer will be permitted to purchase the necessary credits to bring the credit balance to zero.

(ii) If within 90 days of receipt of the manufacturer's end-of-year report, EPA review determines a reporting error in the manufacturer's favor (i.e., resulting in a positive credit balance) or if the manufacturer discovers such an error within 90 days of EPA receipt of the end-of-year report, the credits will be restored for use by the manufacturer.

(e) *Averaging.* Averaging will only be allowed between clean-fuel vehicles under 8500 lbs gvwr.

(f) *Banking.* (1) *Credit deposits.* (i) Under this program, credits can be banked starting in the 1992 model year.

(ii) A manufacturer may bank credits only after the end of the model year and after EPA has reviewed its end-of-year report. During the model year and before submittal of the end-of-year report, credits originally designated in the certification process for banking will be considered reserved and may be redesignated for trading or averaging.

(2) *Credit withdraws.* (i) After being generated, banked/reserved credits shall be available for use and shall maintain their original value for an infinite period of time.

(ii) A manufacturer withdrawing banked credits shall indicate so during certification and in its credit reports.

(3) Banked credits may be used in averaging, trading, or in any combination thereof, during the certification period. Credits declared for banking from the previous model year but unreviewed by EPA may also be used. However, they may be revoked at a later time following EPA review of the end-of-year report or any subsequent audit actions.

(g) *Early credits.* Beginning in model year 1992 appropriate credits, as determined from the given credit table, will be given for the sale of vehicles certified to the clean-fuel vehicle standards for TLEVs, LEVs, ULEVs, and ZEVs, where appropriate. For LDVs and light LDTs (<6000 lbs GVWR), early credits can be earned from model year 1992 to the beginning of the Pilot Program sales requirements in 1996. For heavy LDTs (>6000 lbs GVWR), early

credits can be earned from model years 1992 through 1997. The actual calculation of early credits shall not begin until model year 1996.

[57 FR 60046, Dec. 17, 1992, as amended at 61 FR 127, Jan. 3, 1996]

§ 88.206–94 State opt-in for the California Pilot Test Program.

(a) A state may opt into the Pilot program if it contains all or part of an ozone nonattainment area classified as serious, severe, or extreme under subpart D of Title I.

(b) A state may opt into the program by submitting SIP revisions that meet the requirements of this section.

(c) For a state that chooses to opt in, SIP provisions can not take effect until one year after the state has provided notice to of such provisions to motor vehicle manufacturers and fuel suppliers.

(d) A state that chooses to opt into the program can not require a sales or production mandate for CFVs or clean alternative fuels. States may not subject fuel or vehicle suppliers to penalties or sanctions for failing to produce or sell CFVs or clean alternative fuels.

(e) (1) A state's SIP may include incentives for the sale or use in such state of CFVs required in California by the Clean Fuel Fleet Program, and the use of clean alternative fuels required to be made available in California by the California Pilot Program.

(2) Incentives may include:

(i) A registration fee on non-CFVs of at least 1 percent of the total cost of the vehicle. These fees shall be used to:

(A) Provide financial incentives to purchasers of CFVs and vehicle dealers who sell high volumes or high percentages of CFVs.

(B) Defray administrative costs of the incentive program.

(ii) Exemptions for CFVs from high occupancy vehicle or trip reduction requirements.

(iii) Preferences for CFVs in the use of existing parking places.

[59 FR 50078, Sept. 30, 1994]

TABLES TO SUBPART B OF PART 88

TABLE B–1—CREDIT TABLE FOR PHASE I VEHICLE EQUIVALENTS FOR LIGHT-DUTY VEHICLES AND LIGHT-DUTY TRUCKS

TABLE B–1.1— CREDIT GENERATION: SELLING MORE CLEAN-FUEL VEHICLES THAN REQUIRED

[Phase I: Effective Through 2000 Model-Year]

Vehicle emission category	LDV & LDT ≤6000 gvwr ≤3750 lvw	LDT ≤6000 gvwr >3750 lvw ≤5750 lvw	LDT ≦6000 gvwr ≤3750 alvw	LDT ≦6000 gvwr >3750 alvw ≤5750 alvw	LDT ≦6000 gvwr >5750 alvw
TLEV	1.00	1.28	(1)	(1)	(1)
LEV	1.40	1.76	1.00	1.28	1.56
ULEV	1.68	2.16	1.40	1.76	2.18
ZEV	2.00	2.56	2.00	2.56	3.12

TABLE B–1.2—CREDIT GENERATION: SELLING MORE STRINGENT CLEAN FUEL VEHICLES

Vehicle emission category	LDV & LDT ≤6000 gvwr ≤3750 lvw	LDT ≤6000 gvwr ≦3750 lvw ≤5750 lvw	LDT ≦6000 gvwr ≤3750 alvw	LDT >6000 gvwr ≦3750 alvw ≤5750 alvw	LDT ≤6000 gvwr ≦5750 alvw
TLEV	0.00	0.00	(1)	(1)	(1)
LEV	.40	.48	0.00	0.00	0.00
ULEV	.68	.88	.40	.48	.62
ZEV	1.00	1.28	1.00	1.28	1.56

TABLE B–1.3—CREDIT NEEDED IN LIEU OF SELLING CLEAN-FUEL VEHICLE

Vehicle emission category	LDV & LDT ≤6000 gvwr ≤3750 lvw	LDT ≤6000 gvwr ≦3750 lvw ≤5750 lvw	LDT >6000 gvwr ≤3750 alvw	LDT >6000 gvwr >3750 alvw ≤5750 alvw	LDT >6000 gvwr >5750 alvw
TLEV	1.00	1.28	(1)	(1)	(1)

TABLE B–1.3—CREDIT NEEDED IN LIEU OF SELLING CLEAN-FUEL VEHICLE—Continued

Vehicle emission category	LDV & LDT ≤6000 gvwr ≤3750 lvw	LDT ≤6000 gvwr ≦3750 lvw ≤5750 lvw	LDT >6000 gvwr ≤3750 alvw	LDT >6000 gvwr >3750 alvw ≤5750 alvw	LDT >6000 gvwr >5750 alvw
LEV	.....	.....	1.00	1.28	1.56

[1] There is no TLEV category for this vehicle class.

TABLE B–2—CREDIT TABLE FOR PHASE II: VEHICLE EQUIVALENTS FOR LIGHT-DUTY VEHICLES AND LIGHT-DUTY TRUCKS

TABLE B–2.1—CREDIT GENERATION: SELLING MORE CLEAN-FUEL VEHICLES THAN REQUIRED

[Phase II: effective 2001 and subsequent model-years]

Vehicle emission category	LDV & LDT ≤6000 gvwr ≤3750 lvw	LDT ≤6000 gvwr ≦3750 lvw ≤5750 lvw	LDT ≦6000 gvwr ≤3750 alvw	LDT >6000 gvwr ≦3750 alvw ≤5750 alvw	LDT >6000 gvwr ≦5750 alvw
LEV	1.00	1.26	0.71	0.91	1.11
ULEV	1.20	1.54	1.00	1.26	1.56
ZEV	1.43	1.83	1.43	1.83	2.23

TABLE B–2.2—CREDIT GENERATION: SELLING MORE STRINGENT CLEAN-FUEL VEHICLES

Vehicle emission category	LDV & LDT ≤6000 gvwr ≤3750 lvw	LDT ≤6000 gvwr ≦3750 lvw ≤5750 lvw	LDT ≦6000 gvwr ≤3750 alvw	LDT >6000 gvwr ≦3750 alvw ≤5750 alvw	LDT >6000 gvwr >5750 alvw
LEV	0.00	0.00	0.00	0.00	0.00
ULEV	.20	.28	.29	.34	.45
ZEV	.43	.57	.71	.91	1.11

TABLE B–2.3—CREDIT NEEDED IN LIEU OF SELLING CLEAN-FUEL VEHICLES

Vehicle emission category	LDV & LDT ≤6000 gvwr ≤3750 lvw	LDT ≤6000 gvwr >3750 lvw ≤5750 lvw	LDT >6000 gvwr ≤3750 alvw	LDT >6000 gvwr >3750 alvw ≤5750 alvw	LDT >6000 gvwr >5750 alvw
LEV	1.00	1.26	0.71	0.91	1.11

[59 FR 50079, Sept. 30, 1994]

Subpart C—Clean-Fuel Fleet Program

SOURCE: 58 FR 11901, Mar. 1, 1993, unless otherwise noted.

§ 88.301–93 General applicability.

(a) The requirements of this subpart apply to the following:

(1) State Implementation Plan revisions at 40 CFR part 52 made pursuant to sections 110 and 246 of the CAA (42 U.S.C. 7410 and 7586) hereafter referred to as the ''SIP revision''.

(2) All agencies, departments and instrumentalities of the United States that are subject to the fleet programs established by a state's SIP revision.

(b) The requirements of §§ 88.302–93, 88.303–93, 88.311–93, 88.312–93, and 88.313–93 of this part apply to fleets which voluntarily purchase and operate Inherently Low-Emission Vehicles (ILEVs).

(c) References in this subpart to engine families and emission control systems shall be deemed to refer to durability groups and test groups as applicable for manufacturers certifying new light-duty vehicles and light-duty trucks under the provisions of 40 CFR part 86, subpart S.

[58 FR 11901, Mar. 1, 1993, as amended at 64 FR 23973, May 4, 1999]

§ 88.302–93 Definitions.

The definitions in 40 CFR part 86 of this chapter also apply to this subpart. The definitions in this section apply to this subpart.

Combination heavy-duty vehicle means a vehicle with a GVWR greater than 8,500 pounds (3,900 kilograms) which is comprised of a truck-tractor and one or more pieces of trailered equipment. The truck-tractor is a self-propelled motor vehicle built on one chassis which encompasses the engine, passenger compartment, and a means of coupling to a cargo carrying trailer(s). The truck-tractor itself is not designed to carry cargo.

Inherently Low-Emission Vehicle means any LDV or LDT conforming to the applicable Inherently Low-Emission Vehicle standard, or any HDV with an engine conforming to the applicable Inherently Low-Emission Vehicle standard. No dual-fuel or flexible-fuel vehicles shall be considered Inherently Low-Emission Vehicles unless they are certified to the applicable standard(s) on all fuel types for which they are designed to operate.

Partially-Covered Fleet pertains to a vehicle fleet in a covered area which contains both covered fleet vehicles and non-covered fleet vehicles, i.e., exempt from covered fleet purchase requirements.

Single-unit heavy-duty vehicle means a self-propelled motor vehicle with a GVWR greater than 8,500 pounds (3,900 kilograms) built on one chassis which encompasses the engine, passenger compartment, and cargo carrying function, and not coupled to trailered equipment. All buses, whether or not they are articulated, are considered single-unit vehicles.

§ 88.302–94 Definitions.

The definitions in § 88.302–93 and 40 CFR part 86 also apply to this part. All terms used in this part, but not defined in this section or in § 88.302–93 and 40 CFR part 86 shall have the meaning assigned to them in the Clean Air Act.

Can be centrally fueled means the sum of those vehicles that are centrally fueled and those vehicles that are capable of being centrally fueled.

(1) *Capable of being centrally fueled* means a fleet, or that part of a fleet, consisting of vehicles that could be refueled 100 percent of the time at a location that is owned, operated, or controlled by the covered fleet operator, or is under contract with the covered fleet operator. The fact that one or more vehicles in a fleet is/are not capable of being centrally fueled does not exempt an entire fleet from the program.

(2) *Centrally fueled* means a fleet, or that part of a fleet, consisting of vehicles that are fueled 100 percent of the time at a location that is owned, operated, or controlled by the covered fleet operator, or is under contract with the covered fleet operator. Any vehicle that is under normal operations garaged at home at night but that is, in fact, centrally fueled 100 percent of the time shall be considered to be centrally fueled for the purpose of this definition. The fact that one or more vehicles in a fleet is/are not centrally fueled does not exempt an entire fleet from the program. The fact that a vehicle is not centrally fueled does not mean it could not be centrally fueled in accordance with the definition of ''capable of being centrally fueled.''

(3) *Location* means any building, structure, facility, or installation which; is owned or operated by a person, or is under the control of a person; is located on one or more contiguous properties and contains or could contain a fueling pump or pumps for the use of the vehicles owned or controlled by that person.

Clean-fuel vehicle aftermarket conversion certifier means the business or entity that obtains a certificate of conformity with the clean-fuel vehicle standards and requirements for a vehicle/engine conversion configuration pursuant to the requirements of 40 CFR part 86 and this part 88.

Control means: (1) When it is used to join all entities under common management, means any one or a combination of the following:

(i) A third person or firm has equity ownership of 51 percent or more in each of two or more firms;

(ii) Two or more firms have common corporate officers, in whole or in substantial part, who are responsible for the day-to-day operation of the companies.

(iii) One firm leases, operates, supervises, or in 51 percent or greater part owns equipment and/or facilities used by another person or firm, or has equity ownership of 51 percent or more of another firm.

(2) When it is used to refer to the management of vehicles, means a person has the authority to decide who can operate a particular vehicle, and the purposes for which the vehicle can be operated.

(3) When it is used to refer to the management of people, means a person has the authority to direct the activities of another person or employee in a precise situation, such as at the workplace.

Conversion configuration means any combination of vehicle/engine conversion hardware and a base vehicle of a specific engine family.

Covered fleet operator means a person who operates a fleet of at least ten covered fleet vehicles (as defined in section 241(6) of the Act) and that fleet is operated in a single covered area (even if the covered fleet vehicles are garaged outside of it). For purposes of this definition, the vehicle types described in the definition of *covered fleet* (section 241(5) of the Act) as exempt from the program will not be counted toward the ten-vehicle criterion.

Dealer demonstration vehicle means any vehicle that is operated by a motor vehicle dealer (as defined in section 216(4) of the Act) solely for the purpose of promoting motor vehicle sales, either on the sales lot or through other marketing or sales promotions, or for permitting potential purchasers to drive the vehicle for pre-purchase or pre-lease evaluation.

Emergency vehicle means any vehicle that is legally authorized by a governmental authority to exceed the speed limit to transport people and equipment to and from situations in which speed is required to save lives or property, such as a rescue vehicle, fire truck, or ambulance.

Law enforcement vehicle means any vehicle which is primarily operated by a civilian or military police officer or sheriff, or by personnel of the Federal Bureau of Investigation, the Drug Enforcement Administration, or other agencies of the federal government, or by state highway patrols, municipal law enforcement, or other similar law enforcement agencies, and which is used for the purpose of law enforcement activities including, but not limited to, chase, apprehension, surveillance, or patrol of people engaged in or potentially engaged in unlawful activities. For federal law enforcement vehicles, the definition contained in Executive Order 12759, Section 11: Alternative Fueled Vehicle for the Federal Fleet, Guidance Document for Federal Agencies, shall apply.

Model year, as it applies to the clean fuel vehicle fleet purchase requirements, means September 1 through August 31.

Motor vehicles held for lease or rental to the general public means a vehicle that is owned or controlled primarily for the purpose of short-term rental or extended-term leasing (with or without maintenance), without a driver, pursuant to a contract.

New covered fleet vehicle means a vehicle that has not been previously controlled by the current purchaser, regardless of the model year, except as follows: Vehicles that were manufactured before the start of the fleet program for such vehicle's weight class, vehicles transferred due to the purchase of a company not previously controlled by the purchaser or due to a consolidation of business operations, vehicles transferred as part of an employee transfer, or vehicles transferred for seasonal requirements (i.e., for less than 120 days) are not considered new. States are permitted to discontinue the use of the fourth exception for fleet operators who abuse the discretion afforded them. This definition of new covered fleet vehicle is distinct from the definition of new vehicle as it applies to manufacturer certification, including the certification of vehicles to the clean fuel standards.

Owned or operated, leased or otherwise controlled by such person means either of the following:

(1) Such person holds the beneficial title to such vehicle; or

(2) Such person uses the vehicle for transportation purposes pursuant to a contract or similar arrangement, the term of such contract or similar arrangement is for a period of 120 days or

more, and such person has control over the vehicle pursuant to the definition of control of this section.

Person includes an individual, corporation, partnership, association, State, municipality, political subdivision of a State, and any agency, department, or instrumentality of the United States and any officer, agent, or employee thereof.

Under normal circumstances garaged at personal residence means a vehicle that, when it is not in use, is normally parked at the personal residence of the individual who usually operates it, rather than at a central refueling, maintenance, and/or business location. Such vehicles are not considered to be capable of being central fueled (as defined in this subpart) and are exempt from the program unless they are, in fact, centrally fueled.

Vehicle used for motor vehicle manufacturer product evaluations and tests means a vehicle that is owned and operated by a motor vehicle manufacturer (as defined in section 216(1) of the Act), or motor vehicle component manufacturer, or owned or held by a university research department, independent testing laboratory, or other such evaluation facility, solely for the purpose of evaluating the performance of such vehicle for engineering, research and development, or quality control reasons.

[58 FR 64691, Dec. 9, 1993, as amended at 59 FR 50080, Sept. 30, 1994]

§ 88.303–93 Abbreviations.

The abbreviations in subpart A of this part and in 40 CFR part 86 apply to this subpart. The abbreviations in this section apply to this subpart.

ILEV—Inherently Low-Emission Vehicle.

§ 88.304–94 Clean-fuel Fleet Vehicle Credit Program.

(a) *General*. (1) The SIP revision shall provide for a CFFV credit program to enable covered fleet owners/operators to meet the fleet vehicle purchase requirements of the CAA both by purchasing clean-fuel vehicles (CFVs) directly and by trading and banking CFFV credits for vehicle purchases.

(2) All credit-generating vehicles must meet the applicable emission standards and other requirements contained in 40 CFR part 88, subpart A.

(b) *Program administration*. (1)(i) Each state in which there is all or part of a covered area, as defined in CAA section 246(a)(2), shall promulgate regulations as necessary for implementing this requirement.

(ii) The state shall submit a SIP revision before May 15, 1994 to the Administrator stipulating the specific mechanism by which the CFFV program is to be administered and enforced. The credit program shall commence upon EPA approval of the SIP in accordance with CAA section 246(f)(5).

(2) A fleet owner who purchases/leases a CFFV only to generate CFFV credit shall be subject to the same requirements of the state's CFFV program as a covered fleet owner who purchases/leases a CFFV to demonstrate compliance with covered fleet purchase requirements.

(3) While in the covered area, a dual-fuel/flexible-fuel vehicle which a fleet owner purchases to comply with covered fleet purchase requirements must be operated at all times on the fuel(s) on which it was certified as a CFFV. If the fleet owner receives credit for a dual-fuel/flexible-fuel vehicle purchase, the vehicle must be operated at the same emission level for which the vehicle generated CFFV credit.

(c) *Credit generation*. (1) States shall grant CFFV credits to a covered fleet owner for any of the following qualifying CFFV purchases:

(i) Purchase of a CFFV during any period subsequent to the approval of the SIP revision but prior to the effective date for commencement of a state's CFFV purchase requirement if the purchase meets all other CFFV requirements applicable to such purchases, including the statutory requirement to use only the fuel on which the vehicle was certified as a CFFV;

(ii) Purchase of a greater number of CFFVs than is required under the SIP revision;

(iii) Purchase of a CFFV which meets more stringent emission standards than required under the SIP revision; or

(iv) Purchase of a CFFV in an exempt or non-covered vehicle category by the

owner/operator of a covered or partially-covered fleet.

(2) A state may retroactively grant CFFV credit(s) to a fleet owner for the purchase of a CFFV prior to the approval of the state's SIP revision if the purchase met all CFFV credit program requirements applicable to such purchases, including:

(i) The vehicle purchased would have to have been certified to CFFV emission standards;

(ii) The vehicle purchased would have to have been a dedicated-fuel vehicle;

(iii) If the vehicle purchased was not a dedicated-fuel vehicle, then the fleet owner would have to show that the vehicle had been operated only on the clean alternative fuel on which the vehicle had been certified as a CFFV.

(3) For LDVs and LDTs, credit values shall be determined in accordance with Table C94–1. The state shall use Table C94–1 exclusively in determining LDV and LDT CFFV credit values. Table C94–1.1 applies to paragraphs (c)(1) (i), (ii) and (iv) of this section; Table C94–1.2 applies to paragraph (c)(1)(iii) of this section.

(4) In lieu of determining credit values in accordance with Table C94–1, a state may specify in its SIP revision that Table C94–2 will be used to determine LDV and LDT CFFV credit values in one or more affected nonattainment areas. Any state choosing to do so must provide adequate justification, based on air quality benefits, at the time the SIP revision is submitted. If the use of Table C94–2 is approved by EPA, the State shall use Table C94–2 exclusively in determining LDV and LDT CFFV credit values for vehicles in the subject area or areas. Table C94–2.1 applies to paragraphs (b)(1) (i), (ii) and (iv) of this section; Table C94–2.2 applies to paragraph (b)(1)(iii) of this section.

(5) In lieu of determining credit values in accordance with Table C94–1, a state containing a carbon monoxide nonattainment area(s) having a design value above 16.0 parts per million may specify in its SIP revision that Table C94–3 will be used to determine LDV and LDT CFFV credit values in one or more affected nonattainment areas. Any state choosing to do so must provide adequate justification, based on air quality benefits, at the time the SIP revision is submitted. If the use of Table C94–3 is approved by EPA, the state shall use Table C94–3 exclusively in determining LDV and LDT CFFV credit values for vehicles in the subject area or areas. Table C94–3.1 applies to paragraphs (b)(1) (i), (ii) and (iv) of this section; Table C94–3.2 applies to paragraph (b)(1)(iii) of this section.

(6) For HDVs, credit values shall be determined in accordance with Table C94–4. The state shall use Table C94–4 exclusively in determining heavy-duty vehicle CFFV credit values. Table C94–4.1 applies to paragraphs (c)(1) (i), (ii) and (iv) of this section, and Table C94–4.2 applies to paragraph (c)(1)(iii) of this section.

(7) In lieu of determining credit values in accordance with Table C94–4, a state containing a carbon monoxide nonattainment area(s) having a design value above 16 parts per million may specify in its SIP revision that Table C94–5 will be used to determine heavy-duty vehicle CFFV credit values in one or more affected nonattainment areas. Any state choosing to do so must provide adequate justification, based on air quality benefits, at the time the SIP revision is submitted. If the use of Table C94–5 is approved by EPA, the State shall use Table C94–5 exclusively in determining heavy-duty vehicle CFFV credit values for vehicles in the subject area or areas. Table C94–5.1 applies to paragraphs (b)(1) (i), (ii) and (iv) of this section; Table C94–5.2 applies to paragraph (b)(1)(iii) of this section.

(8) Credit values shall be rounded to two decimal places.

(9) *Heavy heavy-duty vehicles.* (i) States must allow purchase of any clean-fuel single-unit or combination HDV with a GVWR greater than 26,000 pounds (11,800 kilograms) to generate CFFV credit for the fleet vehicle purchaser.

(ii) States must exclude from generating CFFV credit the purchase of any combination HDV with a GVWR greater than 26,000 pounds (11,800 kilograms) which pays all or a portion of its fuel taxes, as evidenced by fuel tax stickers on the combination HDV, to a state(s) which is not part of that covered nonattainment area.

(10) *Light-duty CFFV credits.* Credits generated by the purchase of a qualifying clean-fuel fleet LDV or a LDT shall be designated at the time of issuance as light-duty CFFV credits.

(11) *Heavy-duty CFFV credits.* Credits generated by the purchase of a qualifying clean-fuel fleet HDV shall be designated at the time of issuance as heavy-duty CFFV credits. Further, credits generated by the purchase of a light heavy-duty or a medium heavy-duty qualifying CFFV shall be designated at the time of issuance as light heavy-duty and medium heavy-duty CFFV credits, respectively.

(d) *Credit use.* (1) All credits generated in accordance with these provisions may be freely traded or banked for later use, subject to the provisions contained in this subpart, without discount or depreciation of such credits.

(2) A covered fleet owner or operator desiring to demonstrate full or partial compliance with covered fleet purchase requirements by the redemption of credits shall surrender sufficient credits as established in this paragraph. In lieu of purchasing a CFFV, a fleet owner or operator shall surrender credits equal to the credit value for the corresponding vehicle class and credit calculation method used in that area from either Table C94–1.3, C94–2.3, C94–3.3, C94–4.3, or C94–5.3 of this subpart.

(3) Credits earned within the boundaries of a covered nonattainment area may be traded within those boundaries whether or not that area encompasses parts of more than one state.

(4) Credits issued as a result of CFFV purchase requirements in one nonattainment area may not be used to demonstrate compliance in another nonattainment area, even if a state contains more than one covered nonattainment area.

(5) Credit allocation. (i) Credits generated by the purchase of LDVs and LDTs of 8,500 pounds (3,900 kilograms) GVWR or less may be used to demonstrate compliance with covered fleet purchase requirements applicable to LDVs or LDTs of 8,500 pounds (3,900 kilograms) GVWR or less.

(ii) Credits generated by the purchase of vehicles of more than 8,500 pounds (3,900 kilograms) GVWR may not be used to demonstrate compliance with the covered fleet purchase requirements for vehicles weighing 8,500 pounds (3,900 kilograms) GVWR or less.

(iii) Credits generated by the purchase of vehicles of 8,500 pounds (3,900 kilograms) GVWR or less may not be used to demonstrate compliance with requirements for vehicles of more than 8,500 pounds (3,900 kilograms) GVWR.

(iv) Credits generated by the purchase of a HDV of a particular weight subclass may be used to demonstrate compliance with required heavy-duty vehicle purchases for the same or lighter weight subclasses. These credits may not be used to demonstrate compliance with required HDV purchases for vehicles of heavier weight subclasses than the weight subclass of the vehicle which generated the credits.

§ 88.305–94 Clean-fuel fleet vehicle labeling requirements for heavy-duty vehicles.

(a) All clean-fuel heavy-duty engines and vehicles used as LEVs, ULEVs, and ZEVs that are also regulated under 40 CFR part 86 shall comply with the labeling requirements of 40 CFR 86.095–35 (or later applicable sections), and shall also include an unconditional statement on the label indicating that the engine or vehicle is a LEV, ULEV, or ZEV, and meets all of the applicable requirements of this part 88.

(b) All heavy-duty clean-fuel fleet vehicles not regulated under 40 CFR part 86 shall have a permanent legible label affixed to the engine or vehicle in a readily visible location, which contains the following information:

(1) The label heading: vehicle emissions classification information (e.g., ''This is a Low Emission Vehicle'');

(2) Full corporate name and trademark of the manufacturer;

(3) A statement that this engine or vehicle meets all applicable requirements of the U.S. Environmental Protection Agency clean-fuel fleet vehicle program, as described in this part 88, but not necessarily those requirements found in 40 CFR part 86.

[59 FR 50080, Sept. 30, 1994]

§ 88.306–94 Requirements for a converted vehicle to qualify as a clean-fuel fleet vehicle.

(a) For purposes of meeting the requirements of section 246 of the Clean Air Act or the SIP revisions, conversions of engines or vehicles which satisfy the requirements of this section shall be treated as a purchase of a clean-fuel vehicle under subpart C of this part.

(b) The engine or vehicle must be converted using a conversion configuration which has been certified according to the provisions of 40 CFR part 86 using applicable emission standards and other provisions from part 88 for clean-fuel engines and vehicles. The following requirements will also apply:

(1) If the installation of the certified conversion configuration is performed by an entity other than aftermarket conversion certifier, the aftermarket conversion certifier shall submit a list of such installers to the Administrator. Additional installers must be added to this list and the revised list submitted to the Administrator within 5 working days from the time they are authorized to perform conversion installations by the clean-fuel vehicle aftermarket conversion certifier.

(2) If the installation of the certified conversion configuration is performed by an entity other than the certificate holder, the certificate holder shall provide instructions for installation of the aftermarket conversion system to installers listed on the certificate, and ensure that the systems are properly installed.

(3) For the purpose of determining whether certification under the Small-Volume Manufacturers Certification Program pursuant to the requirements of 40 CFR 86.094–14 is permitted, the 10,000 sales volume limit in 40 CFR 86.094–14(b)(1) is waived for a certifier of a clean-fuel vehicle aftermarket conversion.

(4) Clean-fuel vehicle aftermarket conversion certifiers that are subject to the post-installation emissions testing requirements in paragraph (c) of this section and who will satisfy these requirements by using the two speed idle test procedure detailed in paragraph (c)(2)(ii) of this section must conduct the following testing at the time of certification in order to generate the required certification CO emissions reference values. The certification CO emissions reference values generated must be submitted to the Administrator at the time of application for certification.

(i) For dual and flexible fuel vehicles, certification reference values must be generated for each certification test fuel required for exhaust emissions testing pursuant to 40 CFR 86.113 or 40 CFR 86.1313.

(ii) For light-duty vehicles and light-duty trucks the test fuels used during the emissions testing required by paragraph (b)(3) of this section must comply with the fuel specifications for exhaust emissions testing found in 40 CFR 86.113. For heavy-duty engines the test fuels used during the emissions testing required by paragraph (b)(3) of this section must comply with the fuel specifications for exhaust emissions testing found in 40 CFR 86.1313.

(iii) Single, consecutive idle mode and high-speed mode segments of the two speed idle test must be conducted pursuant to the requirements of 40 CFR 85.2215 and as modified by the provisions of paragraph (c)(4)(ii)(D) of this section and this paragraph to determine the required certification CO emission reference values.

(A) The certification CO emission reference value for the idle mode of the test will be the simple average of all emissions measurements taken during an idle mode of 90 seconds duration pursuant to the requirements in 40 CFR 85.2215(a).

(B) The certification CO emission reference value for the high-speed mode of the test will be the simple average of all emissions measurements taken during a high-speed mode of 180 seconds duration pursuant to the requirements in 40 CFR 85.2215(a).

(c) Except as provided in paragraph (c)(1) of this section, each converted vehicle manufactured by a clean-fuel vehicle aftermarket conversion certifier with aggregate sales of less than 10,000 converted vehicles within a given calendar year must satisfy the post-installation emissions testing requirements of paragraph (c)(2) of this section. If a vehicle fails to satisfy the emissions testing requirements such

vehicle may not be considered a clean-fuel vehicle until such noncompliance is rectified and compliance is demonstrated.

(1) A clean-fuel vehicle aftermarket conversion certifier with estimated sales of 300 or fewer engines and vehicles in a calendar year and which sells or converts vehicles outside of a nonattainment area (as classified under subpart D of Title I) which has an inspection and maintenance program that includes a test of carbon monoxide emissions may submit a request to the Administrator for an exemption from the post-installation emission test requirements of paragraph (c) of this section. If granted, such an exemption would apply to converted vehicles that have the conversion installation performed outside of a nonattainment area which has an inspection and maintenance program that includes a test of carbon monoxide emissions.

(i) The request for exemption submitted to the Administrator must include the following:

(A) The estimated number of engines and vehicles that will be converted in the calendar year.

(B) Sufficient information to demonstrate that complying with the post-installation emission test requirement represents a severe financial hardship.

(C) A description of any emission related quality control procedures used.

(ii) Within 120 days of receipt of the application for exemption, the Administrator will notify the applicant either that an exemption is granted or that sufficient cause for an exemption has not been demonstrated and that all of the clean-fuel vehicle aftermarket conversion certifier's vehicles are subject to the post-installation test requirement of paragraph (c)(2) of this section.

(iii) If the clean-fuel vehicle aftermarket conversion certifier granted an exemption originally estimates that 300 or fewer conversions would be performed in the calendar year, and then later revises the estimate to more than 300 for the year, the certifier shall inform the Administrator of such revision. A post-installation emissions test for each conversion performed after the estimate is revised is required pursuant to the requirements of paragraph (c)(2) of this section. The estimated number of conversions from such a clean-fuel vehicle aftermarket conversion certifier must be greater than 300 in the following calendar year.

(2) A clean-fuel vehicle aftermarket conversion certifier with aggregate sales less than 10,000 converted vehicles within a given calendar year shall conduct post-installation emissions testing using either of the following test methods:

(i) The carbon monoxide (CO) emissions of the converted vehicle must be determined in the manner in which CO emissions are determined according to the inspection and maintenance requirements applicable in the area in which the vehicle is converted or is expected to be operated.

(A) For dual-fuel vehicles, a separate test is required for each fuel on which the vehicle is capable of operating. For flexible fuel vehicles, a single test is required on a fuel that falls within the range of fuel mixtures for which the vehicle was designed. The test fuel(s) used must be commercially available.

(B) A converted vehicle shall be considered to meet the requirements of this paragraph if the vehicle's measured exhaust CO concentration(s) is lower than the cutpoint(s) used to determine CO pass/fail under the inspection and maintenance program in the area in which the conversion is expected to be operated.

(*1*) If CO pass/fail criteria are not available for a vehicle fuel type then pass/fail criteria specific to gasoline use are to be used for vehicles of that fuel type.

(*2*) [Reserved]

(ii) The carbon monoxide (CO) emissions of the converted vehicle must be determined in the manner specified in the two speed idle test-EPA 91 found in 40 CFR 85.2215. All provisions in the two speed idle test must be observed except as detailed in paragraph (c)(2)(ii)(D) of this section.

(A) For dual and flexible fuel vehicles, a separate test is required for each certification test fuel required for exhaust emissions testing pursuant to 40 CFR 86.113 or 40 CFR 86.1313.

(B) For light-duty vehicles and light-duty trucks the test fuels used during

the emissions testing required by paragraph (c)(4) of this section must comply with the fuel specifications for exhaust emissions testing found in 40 CFR 86.113. For heavy-duty engines the test fuels used during the emissions testing required by paragraph (c)(2) of this section must comply with the fuel specifications for exhaust emissions testing found in 40 CFR 86.1313.

(C) A converted vehicle shall be considered to meet the requirements of this paragraph if the following criteria are satisfied:

(1) The vehicle's measured idle mode exhaust CO concentration(s) must be lower than the sum of 0.4 percent CO plus the idle mode certification CO emissions reference value as determined according to the requirements of paragraph (b)(3) of this section.

(2) The vehicle's measured high-speed mode exhaust CO concentration(s) must be lower than the sum of 0.4 percent CO plus the high-speed certification CO emissions reference value as determined according to the requirements of paragraph (b)(3) of this section.

(D) For the purposes of the post-installation emissions testing required by paragraph (c) of this section, the following adjustments to the two speed idle test-EPA 91 in 40 CFR 85.2215 are necessary.

(1) Testing of hydrocarbon emissions and equipment associated solely with hydrocarbon emissions testing is not required.

(2) The CO emissions pass/fail criteria in 40 CFR 85.2215(a)(2), (c)(1)(ii)(A), (c)(2)(ii)(A)(*1*), (c)(2)(iii)(A)(*1*), and (d)(3)(i) are to be replaced with the pass/fail criteria detailed in paragraph (c)(2)(ii)(C) of this section. All HC pass/fail criteria in 40 CFR 85.2215 do not apply.

(3) The void test criteria in 40 CFR 85.2215(a)(3) and (b)(2)(iv) associated with maintaining the measured concentration of CO plus CO^2 above six percent does not apply. However, the Administrator may reconsider requiring that the void test criteria in 40 CFR 85.2215(a)(3) and (b)(2)(iv) be applied, and may issue an advisory memorandum to this effect in the future.

(4) The ambient temperature levels encountered by the vehicle during testing must comply with the specifications in 40 CFR 86.130 or 40 CFR 86.1330.

(d) The clean-fuel vehicle aftermarket conversion certifier shall be considered a manufacturer for purposes of Clean Air Act sections 206 and 207 and related enforcement provisions, and must accept liability for in-use performance of all the vehicles produced under the certificate of conformity as outlined in 40 CFR part 85.

(1) The useful life period for the purposes of determining the in-use liability of the clean-fuel vehicle aftermarket conversion certifier shall be the original useful life of the vehicle prior to conversion.

(2) [Reserved]

(e) *Tampering*. (1) The conversion from an engine or vehicle capable of operating on gasoline or diesel fuel only to a clean-fuel engine or vehicle shall not be considered a violation of the tampering provisions of Clean Air Act section 203(a)(3), if such conversion is done pursuant to a conversion configuration certificate by the aftermarket conversion certifier or by an installer listed on the certificate.

(2) In order to comply with the provisions of this subpart, an aftermarket conversion installer must:

(i) Install a certified aftermarket conversion system for which the installer is listed by the certifier; and

(ii) Perform such installation according to instructions provided by the aftermarket conversion certifier.

(f) *Data collection*. The clean-fuel vehicle aftermarket conversion certifier is responsible for maintaining records of each engine and vehicle converted for use in the Clean Fuel Fleets program for a period of 5 years. The records are to include the engine or vehicle make, engine or vehicle model, engine or vehicle model year, and engine or vehicle identification number of converted engines and vehicles; the certification number of the conversion configuration; the brand names and part numbers of the parts included in the conversion configuration; the date of the conversion and the facility at which the conversion was performed; and the results of post-installation

emissions testing if required pursuant to paragraph (c) of this section.

[59 FR 50080, Sept. 30, 1994, as amended at 61 FR 129, Jan. 3, 1996]

§ 88.307–94 Exemption from temporal transportation control measures for CFFVs.

(a) States with covered areas shall exempt any CFFV required by law to participate in the clean-fuel fleet program or any vehicle generating credits under § 88.304–94(c) from transportation control measures (TCMs) existing wholly or partially for air quality reasons included in an approved state implementation plan which restrict vehicle usage based primarily on temporal considerations, such as time-of-day and day-of-week exemptions. However, CFFVs shall not qualify for TCMs where the temporal element is secondary to some other control element and, in no case, shall such exemptions apply if they create a clear and direct safety hazard. This exemption does not include access to high occupancy vehicle (HOV) lanes, except as provided in § 88.313–93.

(b) States shall also grant temporal TCM exemptions to qualifying CFFVs being operated after SIP approval, but prior to the effective date for commencement of a state's CFFV credit program.

(c) Temporal TCM exemptions provided for in paragraph (a) of this section are not effective outside of the areas for which states can be required to establish CFFV credit programs.

(1) Such exemptions shall remain effective only while the subject vehicle remains in compliance with applicable CFFV emissions standards and other CFFV credit program requirements.

(2) CFFV TCM exemptions shall not be transferred between vehicles within the same fleet nor shall they be sold or traded.

§ 88.308–94 Programmatic requirements for clean-fuel fleet vehicles.

(a) *Multi-State nonattainment areas.* The states comprising a multi-State nonattainment area shall, to the greatest extent possible, promulgate consistent clean-fuel fleet vehicle programs.

(b) *Program start date.* The SIP revision shall provide that the clean fuel vehicle purchase requirements begin to apply no later than model year 1999.

[59 FR 50082, Sept. 30, 1994, as amended at 63 FR 20107, Apr. 23, 1998]

§ 88.309 [Reserved]

§ 88.310–94 Applicability to covered Federal fleets.

(a) *Compliance by Federal vehicles.* As per section 258(a) of the Act, fleets owned or operated by any agency, department, or instrumentality of the United States shall comply with the applicable state regulations concerning CFFVs established in the SIP revision. Such fleets shall be treated in the same manner as private or other government fleets under the applicable state regulations.

(1) Federal agencies shall obtain CFFVs from original equipment manufacturers, to the extent possible, as required under section 248 of the CAA.

(2) The Secretary of Defense may exempt any vehicle(s) from the provisions of any CFFV credit program established in the SIP revision by certifying to the Administrator in writing that inclusion of the specified vehicle(s) in such a program could have an adverse impact on the national security. The Secretary of Defense shall also provide a copy of this statement of exemption to the state agency administering the CFFV credit program in the covered area in which the specified vehicle(s) is registered/operated.

(b) [Reserved]

§ 88.311–93 Emissions standards for Inherently Low-Emission Vehicles.

(a) *Certification.* (1) Emissions Testing Procedures. A vehicle shall be certified as an ILEV if that vehicle satisfies the following conditions:

(i) The vehicle shall be certified under the appropriate exhaust emissions standards from paragraph (c) or (d) of this section depending on the vehicle's weight classification.

(ii) The vehicle shall be certified as having fuel vapor emissions which are five or less total grams per test as measured by the current Federal Test Procedure (FTP), modified for ILEV

certification, from 40 CFR part 86, subpart B for LDVs and LDTs and from 40 CFR part 86, subpart M for HDVs.

(A) After disabling any and all auxiliary emission control devices (canister, purge system, etc.) related to control of evaporative emissions, the fuel vapor emissions shall be measured using the FTP regulations in effect at the time the vehicle is to be certified as an ILEV. For purposes of this section, the vehicle's fuel vapor emissions shall consist of the total grams of diurnal, hot soak, running loss, and resting loss emissions, as appropriate, for the particular fuel/vehicle/engine combination to be tested. In determining ILEV evaporative emissions, the diurnal emissions measurement procedure shall consist of a single diurnal heat build using an ambient or fuel temperature range of 72°–96 °F (22°–36 °C), as appropriate for the applicable FTP regulations (40 CFR part 86).

(B) Conventional Federal Test Procedure. A vehicle with no evaporative emissions control system components may have its evaporative emissions certified for its particular GVWR weight class/subclass if it passes the conventional evaporative emissions FTP from 40 CFR part 86, subpart B for LDVs and LDTs or from 40 CFR part 86, subpart M for HDVs, as applicable.

(iii) The vehicle must meet other special requirements applicable to conventional or clean-fuel vehicles and their fuels as described in any other parts of this chapter, including 40 CFR parts 86 and 88.

(2) Vehicles which have a closed or sealed fuel system may be certified at the administrator's option by engineering evaluation in lieu of testing. These vehicles will be certified as ILEVs only if a leak in the fuel system would result in the vehicle becoming inoperative due to loss of fuel supply, or if half the fuel escapes within 24 hours.

(b) *Identification*. In the application for a vehicle's certification as an ILEV, the manufacturer or the manufacturer's agent shall provide for positive identification of the vehicle's status as an ILEV in the vehicle's Vehicle Emission Control Information (VECI) label in accordance with 40 CFR 86.094–35 and 86.095–35. The label shall contain a highlighted statement (e.g., underscored or boldface letters) that the vehicle is certified to applicable emission standards for ILEV exhaust and evaporative emission standards.

(c) *Light-duty vehicles and light-duty trucks*. ILEVs in LDV and LDT classes shall have exhaust emissions which do not exceed the LEV exhaust emission standards for NMOG, CO, HCHO, and PM and the ULEV exhaust emission standards for NO_X listed in Tables A104–1 through A104–6 for light-duty CFVs. Exhaust emissions shall be measured in accordance with the test procedures specified in § 88.104–94(k). An ILEV must be able to operate on only one fuel, or must be certified as an ILEV on all fuels on which it can operate. These vehicles shall also comply with all requirements of 40 CFR part 86 which are applicable to conventional gasoline-fueled, methanol-fueled, diesel-fueled, natural gas-fueled or liquified petroleum gas-fueled LDVs/LDTs of the same vehicle class and model year.

(d) *Heavy-duty vehicles*. ILEVs in the HDV class shall have exhaust emissions which do not exceed the exhaust emission standards in grams per brake horsepower-hour listed in § 88.105–94(d). Exhaust emissions shall be measured in accordance with the test procedures specified in § 88.105–94(e). An ILEV must be able to operate on only one fuel, or must be certified as an ILEV on all fuels on which it can operate. These vehicles shall also comply with all requirements of 40 CFR part 86 which are applicable in the case of conventional gasoline-fueled, methanol-fueled, diesel-fueled, natural gas-fueled or liquified petroleum gas-fueled HDVs of the same weight class and model year.

(e) *Applicability*. State actions to opt out of the clean-fuel fleet program under section 182(c) of the Act do not affect the applicability of the ILEV program in the affected states.

[57 FR 60046, Dec. 17, 1992, as amended at 59 FR 48536, Sept. 21, 1994; 59 FR 50082, Sept. 30, 1994, 61 FR 127, Jan. 3, 1996]

§ 88.311–98 Emissions standards for Inherently Low-Emission Vehicles.

Section 88.311–98 includes text that specifies requirements that differ from § 88.311–93. Where a paragraph in § 88.311–93 is identical and applicable to

§ 88.311–98, this may be indicated by specifying the corresponding paragraph and the statement ''[Reserved]. For guidance see § 88.311–93.''

(a) heading through (a)(1)(ii) [Reserved]. For guidance see § 88.311–93.

(iii) The vehicle must meet other special requirements applicable to conventional or clean-fuel vehicles and their fuels as described in any other regulations in 40 CFR chapter I, subchapter C, including 40 CFR parts 86 and 88 (e.g., onboard refueling provisions).

(b) through (e) [Reserved]. For guidance see § 88.311–93.

[59 FR 16309, Apr. 6, 1994]

EFFECTIVE DATE NOTE: The new information collection requirements for § 88.311–98 published in the FEDERAL REGISTER at 59 FR 16309, Apr. 6, 1994, which apply to 1998 and later model year vehicles, have not been approved by the Office of Management and Budget (OMB) and are not effective.

§ 88.312–93 Inherently Low-Emission Vehicle labeling.

(a) *Label design*. (1) Label design shall consist of either of the following specifications:

(i) The label shall consist of a white rectangular background, approximately 12 inches (30 centimeters) high by 18 inches (45 centimeters) wide, with ''CLEAN AIR VEHICLE'' printed in contrasting block capital letters at least 4.3 inches (10.6 centimeters) tall and 1.8 inches (4.4 centimeters) wide with a stroke width not less than 0.5 inches (1.3 centimeters). In addition, the words ''INHERENTLY LOW-EMISSION VEHICLE'' must be present in lettering no smaller than 1 inch (2.5 centimeters) high. Nothing shall be added to the label which impairs readability. Labels shall include a serialized identification number; or

(ii) The label shall consist of a white truncated-circular background, approximately 10 inches (25 centimeters) in diameter by 7 inches (17.5 centimeters) in height. The bottom edge of the truncated-circular background shall be approximately 2 inches (5 centimeters) from the center. The acronym ''ILEV'' shall be printed on the label in contrasting block capital letters at least 2 inches (5 centimeters) tall and 1.5 inches (3.8 centimeters) wide with a stroke width not less than 0.4 inches (1.0 centimeter). In addition, the words ''CLEAN AIR VEHICLE'' must be present in lettering no smaller than 0.8 inches (2.0 centimeters) high. Nothing shall be added to the label which impairs readability. Labels shall include a serialized identification number.

(2) The ILEV label shall be fabricated or affixed to a vehicle in such a manner that its removal from the vehicle cannot be accomplished without defacing or destroying the label in whole or in part.

(3) Along with the manufacturer's application to certify a particular ILEV engine class, the manufacturer or the manufacturer's agent shall submit to EPA ILEV labels or reasonable facsimiles of the types which may be mounted on a certified ILEV vehicle of that class.

(b) *Eligibility*. Vehicle manufacturers or their agents must install ILEV labels on a certified ILEV vehicle at the time of its sale to an eligible fleet owner if the vehicle is to be eligible for expanded TCM exemptions. An eligible fleet owner is one who is in a covered area and owns a total of at least ten motor vehicles (including the ILEV(s) being purchased) which operate in the owner's fleet. All of the following shall be provided to demonstrate eligibility: Photocopies of no less than nine motor vehicle registrations indicating registration in the ILEV purchaser's name, a signed statement by the ILEV purchaser that these vehicles are operational in the purchaser's fleet and that the ILEV being purchased will also be operated in this fleet, and a signed statement by the ILEV purchaser that the ILEV labels will be removed and disposed of when the vehicle is sold, given, leased (except as part of a daily rental fleet), or offered for long-term loan to someone who has not demonstrated eligibility for expanded TCMs available to ILEVs according to these criteria.

(c) *ILEV Label installation*. (1) Except as provided for in this paragraph (c), no person shall attach an ILEV label or any facsimile of an ILEV label to any vehicle.

(2)(i) The manufacturer or the manufacturer's agent shall attach three labels on the vehicle in plain sight: One

on the rear of the vehicle and one on each of two sides of the vehicle. Each label shall conform to the specifications of paragraph (a) of this section.

(ii) In the case that an ILEV label of the proportions specified in paragraph (a)(1) of this section cannot be attached to the rear of the ILEV, the manufacturer or the manufacturer's agent shall attach to the rear of the vehicle an ILEV label of either of the following proportions:

(A) The label shall consist of a white rectangular background, approximately 4 inches (10 centimeters) high by 24 inches (60 centimeters) wide, with ''CLEAN AIR VEHICLE'' printed in contrasting block capital letters at least 2.8 inches (7 centimeters) tall and 1.3 inches (3.3 centimeters) wide with a stroke width not less than 0.3 inches (0.8 centimeter). In addition, the words ''INHERENTLY LOW-EMISSION VEHICLE'' must be present in lettering no smaller than 0.6 inches (1.5 centimeters) high. Nothing shall be added to the label which impairs readability. Labels shall include a serialized identification number; or

(B) The label shall consist of a white truncated-circular background, approximately 5 inches (12.5 centimeters) in diameter by 3.5 inches (8.8 centimeters) in height. The bottom edge of the truncated-circular background shall be approximately 1 inch (2.5 centimeters) from the center. The acronym ''ILEV'' shall be printed on the label in contrasting block capital letters at least 1 inch (2.5 centimeters) tall and 0.8 inches (2.0 centimeters) wide with a stroke width not less than 0.3 inches (0.8 centimeters). In addition, the words ''CLEAN AIR VEHICLE'' must be present in lettering no smaller than 0.4 inches (1.0 centimeter) high. Nothing shall be added to the label which impairs readability. Labels shall include a serialized identification number.

(d) *Label removal.* Fleet ILEV owners shall remove and dispose of the ILEV labels on a vehicle before selling or transferring ownership of an ILEV or offering it for lease (unless the ILEV is part of a daily rental fleet) or long-term loan. This provision shall not apply if the person who is receiving the vehicle demonstrates eligibility for expanded TCM exemptions under the federal ILEV program as described in paragraph (b) of this section, or is otherwise qualified under state regulations which expressly expand ILEV label eligibility.

(e) *Label replacement.* (1) The manufacturer shall make replacement ILEV labels available to the fleet owner of a qualifying ILEV to replace any ILEV label which has been lost or removed due to vehicle damage, repair, sale, or lease. The fleet owner's request shall include proof of ownership of the ILEV in question and proof of the fleet owner's eligibility for ILEV TCM exemptions, as outlined in paragraph (c) of this section. Each label shall be imprinted with the same serial number as initially assigned to the damaged/missing ILEV label(s) for that vehicle. Any portion of a damaged label remaining on the ILEV shall be removed from the vehicle and submitted with the request as proof of loss.

(2) Upon receipt of the replacement ILEV label(s), the fleet owner shall attach the new ILEV label(s) only to the vehicle for which replacement ILEV label(s) were requested.

[58 FR 11901, Mar. 1, 1993, as amended at 61 FR 128, Jan. 3, 1996]

§ 88.313–93 Incentives for the purchase of Inherently Low-Emission Vehicles.

(a) *Administration.* (1) The incentives granted to ILEVs provided in this section are not effective outside of nonattainment areas for which states are required to establish CFFV programs under section 246 of the CAA, unless specifically added by states for qualifying vehicles.

(2) Incentives for purchasing ILEVs shall not be transferred between vehicles within the same fleet nor shall they be sold or traded.

(3) No vehicle over 26,000 pounds (11,800 kilograms) GVWR shall be eligible for the following ILEV incentives.

(b) *Exemption from temporal TCMs.* A fleet vehicle which has been certified and labeled as an ILEV according to the provisions of this section and which continues to be in compliance with applicable emissions standards and other ILEV program requirements shall be exempted from TCMs existing

for air quality reasons included in approved state implementation plans which restrict vehicle usage based primarily on temporal considerations, such as time-of-day and day-of-week exemptions.

(c) *Exemption from high-occupancy vehicle lane restrictions.* (1) A fleet vehicle which has been certified and labeled as an ILEV according to the provisions of §§ 88.311 and 88.312 and which continues to be in compliance with applicable emissions standards and other ILEV program requirements shall be exempt from TCMs which restrict a vehicle's access to certain roadway lanes based on the number of occupants in that vehicle, usually known as high-occupancy vehicle (HOV) lanes. These exemptions shall not apply if they would create a clear and direct safety hazard.

(2) In a state containing a covered area, or areas, the governor may petition the Administrator for a waiver from the exemption from HOV lane restrictions for ILEVs for any section of HOV lane in the covered area(s) that can be shown to be congested primarily due to the operation or projected operation of ILEVs. The waiver application shall demonstrate the infeasibility of other means of alleviating HOV/CAV lane congestion, such as adding an additional HOV/CAV lane, further increasing vehicle occupancy requirements and reducing the use of the lane by noneligible vehicles.

TABLES TO SUBPART C OF PART 88

TABLE C94–1—FLEET CREDIT TABLE BASED ON REDUCTION IN NMOG. VEHICLE EQUIVALENTS FOR LIGHT-DUTY VEHICLES AND LIGHT-DUTY TRUCKS

TABLE C94–1.1—CREDIT GENERATION: PURCHASING MORE CLEAN-FUEL VEHICLES THAN REQUIRED BY THE MANDATE

NMOG	LDV, LDT ≤6000 GVWR, ≤3750 LVW	LDT ≤6000 GVWR, >3750 LVW ≤5750 LVW	LDT >6000 GVWR, ≤3750 ALVW	LDT >6000 GVWR, >3750 ALVW ≤5750 ALVW	LDT >6000 GVWR, >5750 ALVW
LEV	1.00	1.26	0.71	0.91	1.11
ULEV	1.20	1.54	1.00	1.26	1.56
ZEV	1.43	1.83	1.43	1.83	2.23

TABLE C94–1.2—CREDIT GENERATION: PURCHASING A ULEV OR ZEV TO MEET THE MANDATE

NMOG	LDV, LDT ≤6000 GVWR, ≤3750 LVW	LDT 1≤6000 GVWR, >3750 LVW ≤5750 LVW	LDT >6000 GVWR, ≤3750 ALVW	LDT >6000 GVWR, >3750 ALVW, ≤5750 ALVW	LDT >6000 GVWR, >5750 ALVW
LEV	0.00	0.00	0.00	0.00	0.00
ULEV	0.20	0.29	0.29	0.34	0.45
ZEV	0.43	0.57	0.71	0.91	1.11

TABLE C94–1.3—CREDIT NEEDED IN LIEU OF PURCHASING A LEV TO MEET THE MANDATE

NMOG	LDV, LDT ≤6000 GVWR, ≤3750 LVW	LDT ≤6000 GVWR, >3750 LVW ≤5750 LVW	LDT >6000 GVWR, ≤3750 ALVW	LDT >6000 GVWR, >3750 ALVW ≤5750 ALVW	LDT >6000 GVWR, ≤5750 ALVW
LEV	1.00	1.26	0.71	0.91	1.11

TABLE C94–2—FLEET CREDIT TABLE BASED ON REDUCTION IN NMOG+NO_X. VEHICLE EQUIVALENTS FOR LIGHT-DUTY VEHICLES AND LIGHT-DUTY TRUCKS

TABLE C94–2.1—CREDIT GENERATION: PURCHASING MORE CLEAN-FUEL VEHICLES THAN REQUIRED BY THE MANDATE

NMOG+NO_X	LDV, LDT ≤6000 GVWR, ≤3750 LVW	LDT ≤6000 GVWR, >3750 LVW ≤5750 LVW	LDT >6000 GVWR, ≤3750 ALVW	LDT >6000 GVWR, >3750 ALVW ≤5750 ALVW	LDT >6000 GVWR, >5750 ALVW
LEV	1.00	1.39	0.33	0.43	0.52
ULEV	1.09	1.52	1.00	1.39	2.06
ZEV	1.73	2.72	1.73	2.72	3.97

TABLE C94–2.2—CREDIT GENERATION: PURCHASING A ULEV OR ZEV TO MEET THE MANDATE

NMOG+NO_X	LDV, LDT ≤6000 GVWR, ≤3750 LVW	LDT ≤6000 GVWR, >3750 LVW ≤5750 LVW	LDT >6000 GVWR, ≤3750 ALVW	LDT >6000 GVWR, >3750 ALVW ≤5750 ALVW	LDT >6000 GVWR, >5750 ALVW
LEV	0.00	0.00	0.00	0.00	0.00
ULEV	0.09	0.13	0.67	0.96	1.54
ZEV	0.73	1.34	1.40	2.29	3.45

TABLE C94–2.3—CREDIT NEEDED IN LIEU OF PURCHASING A LEV TO MEET THE MANDATE

NMOG+NO_X	LDV, LDT ≤6000 GVWR, ≤3750 LVW	LDT ≤6000 GVWR, >3750 LVW ≤5750 LVW	LDT ≤6000 GVWR, ≤3750 ALVW	LDT >6000 GVWR, >3750 ALVW ≤5750 ALVW	LDT >6000 GVWR, >5750 ALVW
LEV	1.00	1.39	0.33	0.43	0.52

TABLE C94–3—FLEET CREDIT TABLE BASED ON REDUCTION IN CARBON MONOXIDE. VEHICLE EQUIVALENTS FOR LIGHT-DUTY VEHICLES AND LIGHT-DUTY TRUCKS

TABLE C94–3.1—CREDIT GENERATION: PURCHASING MORE CLEAN-FUEL VEHICLES THAN REQUIRED BY THE MANDATE

CO	LDV, LDT ≤6000 GVWR, ≤3750 LVW	LDT ≤6000 GVWR, >3750 LVW ≤5750 LVW	LDT ≤6000 GVWR, ≤3750 ALVW	LDT >6000 GVWR, >3750 ALVW ≤5750 ALVW	LDT >6000 GVWR, >5750 ALVW
LEV	1.00	1.00	1.00	1.00	1.00
ULEV	2.00	2.29	2.00	2.29	2.47
ZEV	3.00	3.59	3.00	3.59	3.94

TABLE C94–3.2—CREDIT GENERATION: PURCHASING A ULEV OR ZEV TO MEET THE MANDATE

CO	LDV, LDT ≤6000 GVWR, ≤3750 LVW	LDT ≤6000 GVWR, >3750 LVW ≤5750 LVW	LDT >6000 GVWR, ≤3750 ALVW	LDT >6000 GVWR, >3750 ALVW ≤5750 ALVW	LDT >6000 GVWR, >5750 ALVW
LEV	0.00	0.00	0.00	0.00	0.00
ULEV	1.00	1.00	1.00	1.00	1.00

TABLE C94–3.2—CREDIT GENERATION: PURCHASING A ULEV OR ZEV TO MEET THE MANDATE—Continued

CO	LDV, LDT ≤6000 GVWR, ≤3750 LVW	LDT ≤6000 GVWR, >3750 LVW ≤5750 LVW	LDT >6000 GVWR, ≤3750 ALVW	LDT >6000 GVWR, >3750 ALVW ≤5750 ALVW	LDT >6000 GVWR, >5750 ALVW
ZEV	2.00	2.29	2.00	2.29	2.47

TABLE C94–3.3—CREDIT NEEDED IN LIEU OF PURCHASING A LEV TO MEET THE MANDATE

CO	LDV, LDT ≤6000 GVWR, ≤3750 LVW	LDT ≤6000 GVWR, >3750 LVW ≤5750 LVW	LDT >6000 GVWR, ≤3750 ALVW	LDT >6000 GVWR, >3750 ALVW ≤5750 ALVW	LDT >6000 GVWR, >5750 ALVW
LEV	1.00	1.00	1.00	1.00	1.00

TABLE C94–4—FLEET CREDIT TABLE BASED ON REDUCTION IN NMHC+NO_X. VEHICLE EQUIVALENTS FOR HEAVY-DUTY VEHICLES—TABLE C94–4.1—CREDIT GENERATION: PURCHASING MORE CLEAN-FUEL VEHICLES THAN REQUIRED BY THE MANDATE

NMHC+NO_X	Light HDV	Medium HDV	Heavy HDV
LEV	1.00	1.00	1.00
ULEV	1.87	1.87	1.87
ZEV	3.53	3.53	3.53

TABLE C94–4.2—CREDIT GENERATION: PURCHASING A ULEV OR ZEV TO MEET THE MANDATE

NMHC+NO_X	Light HDV	Medium HDV
LEV	0.00	0.00
ULEV	0.87	0.87
ZEV	2.53	2.53

TABLE C94–4.3—CREDIT NEEDED IN LIEU OF PURCHASING A LEV TO MEET THE MANDATE

NMHC+NO_X	Light HDV	Medium HDV
LEV	1.00	1.00

TABLE C94–5—FLEET CREDIT TABLE BASED ON REDUCTION IN CO. VEHICLE EQUIVALENTS FOR HEAVY-DUTY VEHICLES—TABLE C94–5.1—CREDIT GENERATION: PURCHASING MORE CLEAN-FUEL VEHICLES THAN REQUIRED BY THE MANDATE

CO	Light HDV	Medium HDV	Heavy HDV
LEV	1.00	1.00	1.00
ULEV	2.00	2.00	2.00

TABLE C94–5—FLEET CREDIT TABLE BASED ON REDUCTION IN CO. VEHICLE EQUIVALENTS FOR HEAVY-DUTY VEHICLES—TABLE C94–5.1—CREDIT GENERATION: PURCHASING MORE CLEAN-FUEL VEHICLES THAN REQUIRED BY THE MANDATE—Continued

CO	Light HDV	Medium HDV	Heavy HDV
ZEV	3.00	3.00	3.00

TABLE C94–5.2—CREDIT GENERATION: PURCHASING A ULEV OR ZEV TO MEET THE MANDATE

CO	Light HDV	Medium HDV
LEV	0.00	0.00
ULEV	1.00	1.00
ZEV	2.00	2.00

TABLE C94–5.3—CREDIT NEEDED IN LIEU OF PURCHASING A LEV TO MEET THE MANDATE

CO	Light HDV	Medium HDV
LEV	1.00	1.00

[58 FR 11901, Mar. 1, 1993, as amended at 59 FR 50082, Sept. 30, 1994, 61 FR 128, Jan. 3, 1996]

PART 89—CONTROL OF EMISSIONS FROM NEW AND IN-USE NONROAD COMPRESSION-IGNITION ENGINES

Subpart A—General

Sec.
89.1 Applicability.
89.2 Definitions.
89.3 Acronyms and abbreviations.
89.4 [Reserved]
89.5 Table and figure numbering; position.
89.6 Reference materials.
89.7 Treatment of confidential information.
APPENDIX A TO SUBPART A—STATE REGULATION OF NONROAD INTERNAL COMBUSTION ENGINES

Subpart B—Emission Standards and Certification Provisions

89.101 Applicability.
89.102 Effective dates, optional inclusion, flexibility for equipment manufacturers.
89.103 Definitions.
89.104 Useful life, recall, and warranty periods.
89.105 Certificate of conformity.
89.106 Prohibited controls.
89.107 Defeat devices.
89.108 Adjustable parameters, requirements.
89.109 Maintenance instructions and minimum allowable maintenance intervals.
89.110 Emission control information label.
89.111 Averaging, banking, and trading of exhaust emissions.
89.112 Oxides of nitrogen, carbon monoxide, hydrocarbon, and particulate matter exhaust emission standards.
89.113 Smoke emission standard.
89.114 Special and alternate test procedures.
89.115 Application for certificate.
89.116 Engine families.
89.117 Test fleet selection.
89.118 Deterioration factors and service accumulation.
89.119 Emission tests.
89.120 Compliance with emission standards.
89.121 Certificate of conformity effective dates.
89.122 Certification.
89.123 Amending the application and certificate of conformity.
89.124 Record retention, maintenance, and submission.
89.125 Production engines, annual report.
89.126 Denial, revocation of certificate of conformity.
89.127 Request for hearing.
89.128 Hearing procedures.
89.129 Right of entry.
89.130 Rebuild practices.

Subpart C—Averaging, Banking, and Trading Provisions

89.201 Applicability.
89.202 Definitions.
89.203 General provisions.
89.204 Averaging.
89.205 Banking.
89.206 Trading.
89.207 Credit calculation.
89.208 Labeling.
89.209 Certification.
89.210 Maintenance of records.
89.211 End-of-year and final reports.
89.212 Notice of opportunity for hearing.

Subpart D—Emission Test Equipment Provisions

89.301 Scope; applicability.
89.302 Definitions.
89.303 Symbols/abbreviations.
89.304 Equipment required for gaseous emissions; overview.
89.305 Equipment measurement accuracy/calibration frequency.
89.306 Dynamometer specifications and calibration weights.
89.307 Dynamometer calibration.
89.308 Sampling system requirements for gaseous emissions.
89.309 Analyzers required for gaseous emissions.
89.310 Analyzer accuracy and specifications.
89.311 Analyzer calibration frequency.
89.312 Analytical gases.
89.313 Initial calibration of analyzers.
89.314 Pre- and post-test calibration of analyzers.
89.315 Analyzer bench checks.
89.316 Analyzer leakage and response time.
89.317 NO_X converter check.
89.318 Analyzer interference checks.
89.319 Hydrocarbon analyzer calibration.
89.320 Carbon monoxide analyzer calibration.
89.321 Oxides of nitrogen analyzer calibration.
89.322 Carbon dioxide analyzer calibration.
89.323 NDIR analyzer calibration.
89.324 Calibration of other equipment.
89.325 Engine intake air temperature measurement.
89.326 Engine intake air humidity measurement.
89.327 Charge cooling.
89.328 Inlet and exhaust restrictions.
89.329 Engine cooling system.
89.330 Lubricating oil and test fuels.
89.331 Test conditions.
APPENDIX A TO SUBPART D—TABLES
APPENDIX B TO SUBPART D—FIGURES

Subpart E—Exhaust Emission Test Procedures

89.401 Scope; applicability.

89.402 Definitions.
89.403 Symbols/abbreviations.
89.404 Test procedure overview.
89.405 Recorded information.
89.406 Pre-test procedures.
89.407 Engine dynamometer test run.
89.408 Post-test procedures.
89.409 Data logging.
89.410 Engine test cycle.
89.411 Exhaust sample procedure—gaseous components.
89.412 Raw gaseous exhaust sampling and analytical system description.
89.413 Raw sampling procedures.
89.414 Air flow measurement specifications.
89.415 Fuel flow measurement specifications.
89.416 Raw exhaust gas flow.
89.417 Data evaluation for gaseous emissions.
89.418 Raw emission sampling calculations.
89.419 Dilute gaseous exhaust sampling and analytical system description.
89.420 Background sample.
89.421 Exhaust gas analytical system; CVS bag sample.
89.422 Dilute sampling procedures—CVS calibration.
89.423 [Reserved]
89.424 Dilute emission sampling calculations.
89.425 [Reserved]

APPENDIX A TO SUBPART E—FIGURES
APPENDIX B TO SUBPART E—TABLES 1

Subpart F—Selective Enforcement Auditing

89.501 Applicability.
89.502 Definitions.
89.503 Test orders.
89.504 Testing by the Administrator.
89.505 Maintenance of records; submittal of information.
89.506 Right of entry and access.
89.507 Sample selection.
89.508 Test procedures.
89.509 Calculation and reporting of test results.
89.510 Compliance with acceptable quality level and passing and failing criteria for selective enforcement audits.
89.511 Suspension and revocation of certificates of conformity.
89.512 Request for public hearing.
89.513 Administrative procedures for public hearing.
89.514 Hearing procedures.
89.515 Appeal of hearing decision.
89.516 Treatment of confidential information.

APPENDIX A TO SUBPART F—SAMPLING PLANS FOR SELECTIVE ENFORCEMENT AUDITING OF NONROAD ENGINES

Subpart G—Importation of Nonconforming Nonroad Engines

89.601 Applicability.
89.602 Definitions.
89.603 General requirements for importation of nonconforming nonroad engines.
89.604 Conditional admission.
89.605 Final admission of certified nonroad engines.
89.606 Inspection and testing of imported nonroad engines.
89.607 Maintenance of independent commercial importer's records.
89.608 ''In Use'' inspections and recall requirements.
89.609 Final admission of modification nonroad engines and test nonroad engines.
89.610 Maintenance instructions, warranties, emission labeling.
89.611 Exemptions and exclusions.
89.612 Prohibited acts; penalties.
89.613 Treatment of confidential information.

Subpart H—Recall Regulations

89.701 Applicability.
89.702 Definitions.
89.703 Applicability of part 85, subpart S.

Subpart I—Emission Defect Reporting Requirements

89.801 Applicability.
89.802 Definitions.
89.803 Applicability of part 85, subpart T.

Subpart J—Exemption Provisions

89.901 Applicability.
89.902 Definitions.
89.903 Application of section 216(10) of the Act.
89.904 Who may request an exemption.
89.905 Testing exemption.
89.906 Manufacturer-owned exemption and precertification exemption.
89.907 Display exemption.
89.908 National security exemption.
89.909 Export exemptions.
89.910 Granting of exemptions.
89.911 Submission of exemption requests.
89.912 Treatment of confidential information.

Subpart K—General Enforcement Provisions and Prohibited Acts

89.1001 Applicability.
89.1002 Definitions.
89.1003 Prohibited acts.
89.1004 General enforcement provisions.
89.1005 Injunction proceedings for prohibited acts.
89.1006 Penalties.
89.1007 Warranty provisions.

89.1008 In-use compliance provisions.

AUTHORITY: 42 U.S.C. 7521, 7522, 7523, 7524, 7525, 7541, 7542, 7543, 7545, 7547, 7549, 7550, and 7601(a).

SOURCE: 59 FR 31335, June 17, 1994, unless otherwise noted.

Subpart A—General

§ 89.1 Applicability.

(a) This part applies for all compression-ignition nonroad engines (see definition of ''nonroad engine'' in § 89.2) except those specified in paragraph (b) of this section. This means that the engines for which this part applies include but are not limited to the following:

(1) Compression-ignition engines exempted from the requirements of 40 CFR Part 92 by 40 CFR 92.907;

(2) Compression-ignition engines exempted from the requirements of 40 CFR Part 94 by 40 CFR 94.907;

(3) Portable compression-ignition engines that are used in but not installed in marine vessels (as defined in the General Provisions of the United States Code, 1 U.S.C. 3);

(4) Non-propulsion compression-ignition engines used in locomotives; and

(5) Compression-ignition marine engines with rated power under 37 kW.

(b) (1) *Aircraft engines*. This part does not apply for engines used in aircraft (as defined in 40 CFR 87.1).

(2) *Mining engines*. This part does not apply for engines used in underground mining of engines used in underground mining equipment and regulated by the Mining Safety and Health Administration (MSHA) in 30 CFR Parts 7, 31, 32, 36, 56, 57, 70, and 75.

(3) *Locomotive engines*. This part does not apply for engines that:

(i) Are subject to the standards of 40 CFR part 92; or

(ii) Are exempted from the requirements of 40 CFR part 92 by exemption provisions of 40 CFR part 92 other than those specified in 40 CFR 92.907.

(4) *Marine engines*. This part does not apply for engines that:

(i) Are subject to the standards of 40 CFR part 94;

(ii) Are exempted from the requirements of 40 CFR part 94 by exemption provisions of 40 CFR part 94 other than those specified in 40 CFR 94.907; or

(iii) Are marine engines (as defined in 40 CFR part 94) with rated power at or above 37kW that are manufactured in calendar years in which the standards of 40 CFR part 94 are not yet applicable.

(5) *Hobby engines*. This part does not apply for engines with a per-cylinder displacement of less than 50 cubic centimeters.

[64 FR 73330, Dec. 29, 1999]

§ 89.2 Definitions.

The following definitions apply to part 89. All terms not defined herein have the meaning given them in the Act.

Act means the Clean Air Act, as amended, 42 U.S.C. 7401 *et seq*.

Adjustable parameter means any device, system, or element of design which is physically capable of being adjusted (including those which are difficult to access) and which, if adjusted, may affect emissions or engine performance during emission testing.

Administrator means the Administrator of the Environmental Protection Agency or his or her authorized representative.

Auxiliary emission control device (AECD) means any element of design that senses temperature, vehicle speed, engine RPM, transmission gear, or any other parameter for the purpose of activating, modulating, delaying, or deactivating the operation of any part of the emission control system.

Auxiliary marine diesel engine means a marine diesel engine that is not a propulsion marine diesel engine.

Blue Sky Series engine means a nonroad engine meeting the requirements of § 89.112(f).

Certification means, with respect to new nonroad engines, obtaining a certificate of conformity for an engine family complying with the nonroad engine emission standards and requirements specified in this part.

Compression-ignition means relating to a type of engine with operating characteristics significantly similar to the theoretical Diesel combustion cycle. The non-use of a throttle to regulate intake air flow for controlling

power during normal operation is indicative of a compression-ignition engine. This definition is applicable beginning January 1, 2000.

Constant-speed engine means an engine that is governed to operate only at rated speed.

Crankcase emissions means airborne substances emitted to the atmosphere from any portion of the engine crankcase ventilation or lubrication systems.

Emission control system means any device, system, or element of design which controls or reduces the emission of substances from an engine.

Engine, as used in this part, refers to nonroad engine.

Engine manufacturer means any person engaged in the manufacturing or assembling of new nonroad engines or importing such engines for resale, or who acts for and is under the control of any such person in connection with the distribution of such engines. Engine manufacturer does not include any dealer with respect to new nonroad engines received by such person in commerce.

Engine used in a locomotive means either an engine placed in the locomotive to move other equipment, freight, or passenger traffic, or an engine mounted on the locomotive to provide auxiliary power.

EPA enforcement officer means any officer or employee of the Environmental Protection Agency so designated in writing by the Administrator (or by his or her designee).

Exhaust gas recirculation means an emission control technology that reduces emissions by routing exhaust gases that had been exhausted from the combustion chamber(s) back into the engine to be mixed with incoming air prior to or during combustion. The use of valve timing to increase the amount of residual exhaust gas in the combustion chamber(s) that is mixed with incoming air prior to or during combustion is not considered to be exhaust gas recirculation for the purposes of this part.

Family emission limit (FEL) means an emission level that is declared by the manufacturer to serve in lieu of an emission standard for certification purposes and for the averaging, banking, and trading program. A FEL must be expressed to the same number of decimal places as the applicable emission standard.

Full load governed speed is the maximum full load speed as specified by the manufacturer in the sales and service literature and certification application. This speed is the highest engine speed with an advertised power greater than zero.

Gross power means the power measured at the crankshaft or its equivalent, the engine being equipped only with the standard accessories (such as oil pumps, coolant pumps, and so forth) necessary for its operation on the test bed. Alternators must be used, if necessary, to run the engine. Fans, air conditioners, and other accessories may be used at the discretion of the manufacturer, but no power adjustments for these accessories may be made.

Identification number means a specification (for example, model number/serial number combination) which allows a particular nonroad engine to be distinguished from other similar engines.

Intermediate speed means peak torque speed if peak torque speed occurs from 60 to 75 percent of rated speed. If peak torque speed is less than 60 percent of rated speed, intermediate speed means 60 percent of rated speed. If peak torque speed is greater than 75 percent of rated speed, intermediate speed means 75 percent of rated speed.

Marine diesel engine means a compression-ignition engine that is intended to be installed on a vessel.

Model year (MY) means the manufacturer's annual new model production period which includes January 1 of the calendar year, ends no later than December 31 of the calendar year, and does not begin earlier than January 2 of the previous calendar year. Where a manufacturer has no annual new model production period, model year means calendar year.

New for purposes of this part, means a nonroad engine, nonroad vehicle, or nonroad equipment the equitable or legal title to which has never been transferred to an ultimate purchaser. Where the equitable or legal title to the engine, vehicle, or equipment is not

transferred to an ultimate purchaser until after the engine, vehicle, or equipment is placed into service, then the engine, vehicle, or equipment will no longer be new after it is placed into service. A nonroad engine, vehicle, or equipment is placed into service when it is used for its functional purposes. With respect to imported nonroad engines, nonroad vehicles, or nonroad equipment, the term *new* means an engine, vehicle, or piece of equipment that is not covered by a certificate of conformity issued under this part at the time of importation, and that is manufactured after the effective date of a regulation issued under this part which is applicable to such engine, vehicle, or equipment (or which would be applicable to such engine, vehicle, or equipment had it been manufactured for importation into the United States).

Nonroad engine means:

(1) Except as discussed in paragraph (2) of this definition, a nonroad engine is any internal combustion engine:

(i) In or on a piece of equipment that is self-propelled or serves a dual purpose by both propelling itself and performing another function (such as garden tractors, off-highway mobile cranes and bulldozers); or

(ii) In or on a piece of equipment that is intended to be propelled while performing its function (such as lawnmowers and string trimmers); or

(iii) That, by itself or in or on a piece of equipment, is portable or transportable, meaning designed to be and capable of being carried or moved from one location to another. Indicia of transportability include, but are not limited to, wheels, skids, carrying handles, dolly, trailer, or platform.

(2) An internal combustion engine is not a nonroad engine if:

(i) the engine is used to propel a motor vehicle or a vehicle used solely for competition, or is subject to standards promulgated under section 202 of the Act; or

(ii) the engine is regulated by a federal New Source Performance Standard promulgated under section 111 of the Act; or

(iii) the engine otherwise included in paragraph (1)(iii) of this definition remains or will remain at a location for more than 12 consecutive months or a shorter period of time for an engine located at a seasonal source. A location is any single site at a building, structure, facility, or installation. Any engine (or engines) that replaces an engine at a location and that is intended to perform the same or similar function as the engine replaced will be included in calculating the consecutive time period. An engine located at a seasonal source is an engine that remains at a seasonal source during the full annual operating period of the seasonal source. A seasonal source is a stationary source that remains in a single location on a permanent basis (i.e., at least two years) and that operates at that single location approximately three months (or more) each year. This paragraph does not apply to an engine after the engine is removed from the location.

Nonroad equipment means equipment that is powered by nonroad engines.

Nonroad vehicle means a vehicle that is powered by a nonroad engine as defined in this section and that is not a motor vehicle or a vehicle used solely for competition.

Nonroad vehicle or nonroad equipment manufacturer means any person engaged in the manufacturing or assembling of new nonroad vehicles or equipment r importing such vehicles or equipment for resale, or who acts for and is under the control of any such person in connection with the distribution of such vehicles or equipment. A nonroad vehicle or equipment manufacturer does not include any dealer with respect to new nonroad vehicles or equipment received by such person in commerce. A nonroad vehicle or equipment manufacturer does not include any person engaged in the manufacturing or assembling of new nonroad vehicles or equipment who does not install an engine as part of that manufacturing or assembling process. All nonroad vehicle or equipment manufacturing entities that are under the control of the same person are considered to be a single nonroad vehicle or nonroad equipment manufacturer.

Opacity means the fraction of a beam of light, expressed in percent, which fails to penetrate a plume of smoke.

Operating hours means:

(1) For engine storage areas or facilities, all times during which personnel other than custodial personnel are at work in the vicinity of the storage area or facility and have access to it.

(2) For all other areas or facilities, all times during which an assembly line is in operation or all times during which testing, maintenance, service accumulation, production or compilation of records, or any other procedure or activity related to certification testing, to translation of designs from the test stage to the production stage, or to engine manufacture or assembly is being carried out in a facility.

Post-manufacture marinizer means a person who produces a marine diesel engine by substantially modifying a certified or uncertified complete or partially complete engine, and is not controlled by the manufacturer of the base engine or by an entity that also controls the manufacturer of the base engine. For the purpose of this definition, ''substantially modify'' means changing an engine in a way that could change engine emission characteristics.

Presentation of credentials means the display of the document designating a person as an EPA enforcement officer or EPA authorized representative.

Propulsion marine diesel engine means a marine diesel engine that is intended to move a vessel through the water or direct the movement of a vessel.

Rated speed is the maximum full load governed speed for governed engines and the speed of maximum horsepower for ungoverned engines.

Specific emissions means emissions expressed on the basis of observed brake power, using units of g/kW-hr. Observed brake power measurement includes accessories on the engine if these accessories are required for running an emission test (except for the cooling fan). When it is not possible to test the engine in the gross conditions, for example, if the engine and transmission form a single integral unit, the engine may be tested in the net condition. Power corrections from net to gross conditions will be allowed with prior approval of the Administrator.

Test fleet means the engine or group of engines that a manufacturer uses during certification to determine compliance with emission standards.

Tier 1 engine means an engine subject to the Tier 1 emission standards listed in § 89.112(a).

Tier 2 engine means an engine subject to the Tier 2 emission standards listed in § 89.112(a).

Tier 3 engine means an engine subject to the Tier 3 emission standards listed in § 89.112(a).

Ultimate purchaser means, with respect to any new nonroad engine, new nonroad vehicle, or new nonroad equipment, the first person who in good faith purchases such new nonroad engine, nonroad vehicle, or nonroad equipment for purposes other than resale.

Used solely for competition means exhibiting features that are not easily removed and that would render its use other than in competition unsafe, impractical, or highly unlikely.

U.S.-directed production volume means the number of nonroad equipment, vehicle, or marine diesel engine units produced by a manufacturer for which the manufacturer has reasonable assurance that sale was or will be made to ultimate purchasers in the United States.

Vessel has the meaning given to it in 1 U.S.C. 3.

[59 FR 31335, June 17, 1994, as amended at 61 FR 52102, Oct. 4, 1996; 63 FR 18998, Apr. 16, 1998; 63 FR 56996, Oct. 23, 1998; 65 FR 73331, Dec. 29, 1999]

§ 89.3 Acronyms and abbreviations.

The following acronyms and abbreviations apply to part 89.

AECD Auxiliary emission control device
ASME American Society of Mechanical Engineers
ASTM American Society for Testing and Materials
CAA Clean Air Act
CAAA Clean Air Act Amendments of 1990
CI Compression-ignition
CO Carbon monoxide
CO_2 Carbon dioxide
EGR Exhaust gas recirculation
EPA Environmental Protection Agency
FEL Family emission limit
FTP Federal Test Procedure
g/kW-hr Grams per kilowatt hour
HC Hydrocarbons
ICI Independent Commercial Importer
kW Kilowatt

NIST National Institute for Standards and Testing
NMHC Nonmethane hydrocarbon
NTIS National Technical Information Service
NO Nitric oxide
NO_2 Nitrogen dioxide
NO_X Oxides of nitrogen
O_2 Oxygen
OEM Original equipment manufacturer
PM Particulate matter
SAE Society of Automotive Engineers
SEA Selective Enforcement Auditing
SI Spark-ignition
THC Total hydrocarbon
U.S.C. United States Code
VOC Volatile organic compounds

[59 FR 31335, June 17, 1994, as amended at 63 FR 56997, Oct. 23, 1998]

§ 89.4 [Reserved]

§ 89.5 Table and figure numbering; position.

(a) Tables for each subpart appear in an appendix at the end of the subpart. Tables are numbered consecutively by order of appearance in the appendix. The table title will indicate the model year (if applicable) and the topic.

(b) Figures for each subpart appear in an appendix at the end of the subpart. Figures are numbered consecutively by order of appearance in the appendix. The figure title will indicate the model year (if applicable) and the topic.

§ 89.6 Reference materials.

(a) *Incorporation by reference.* The documents in paragraph (b) of this section have been incorporated by reference. The incorporation by reference was approved by the Director of the Federal Register in accordance with 5 U.S.C. 552(a) and 1 CFR part 51. Copies may be inspected at US EPA, OAR, 1200 Pennsylvania Ave., NW., Washington, DC 20460, or at the Office of the Federal Register, 800 N. Capitol Street NW., Suite 700, Washington, DC.

(b) The following paragraphs and tables set forth the material that has been incorporated by reference in this part.

(1) *ASTM material.* The following table sets forth material from the American Society for Testing and Materials which has been incorporated by reference. The first column lists the number and name of the material. The second column lists the section(s) of this part, other than § 89.6, in which the matter is referenced. The second column is presented for information only and may not be all inclusive. Copies of these materials may be obtained from American Society for Testing and Materials, 100 Barr Harbor Drive, West Conshohocken, PA 19428–2959.

Document number and name	40 CFR part 89 reference
ASTM D86–97:	
''Standard Test Method for Distillation of Petroleum Products at Atmospheric Pressure''	Appendix A to Subpart D.
ASTM D93–97:	
''Standard Test Methods for Flash Point by Pensky-Martens Closed Cup Tester''	Appendix A to Subpart D.
ASTM D129–95:	
''Standard Test Method for Sulfur in Petroleum Products (General Bomb Method)''	Appendix A to Subpart D.
ASTM D287–92:	
''Standard Test Method for API Gravity of Crude Petroleum and Petroleum Products'' (Hydrometer Method).	Appendix A to Subpart D
ASTM D445–97:	
''Standard Test Method for Kinematic Viscosity of Transparent and Opaque Liquids (the Calculation of Dynamic Viscosity)''.	Appendix A to Subpart D.
ASTM D613–95:	
''Standard Test Method for Cetane Number of Diesel Fuel Oil''	Appendix A to Subpart D.
ASTM D1319–98:	
''Standard Test Method for Hydrocarbon Types in Liquid Petroleum Products by Fluorescent Indicator Adsorption''.	Appendix A to Subpart D.
ASTM D2622–98:	
''Standard Test Method for Sulfur in Petroleum Products by Wavelength Dispersive X-ray Fluorescence Spectrometry''.	Appendix A to Subpart D.
ASTM D5186–96:	
''Standard Test Method for ''Determination of the Aromatic Content and Polynuclear Aromatic Content of Diesel Fuels and Aviation Tubine Fuels By Supercritical Fluid Chromatography''.	Appendix A to Subpart D.
ASTM E29–93a:	
''Standard Practice for Using Significant Digits in Test Data to Determine Conformance with Specifications''.	89.120; 89.207; 89.509.

[59 FR 31335, June 17, 1994, as amended at 63 FR 56997, Oct. 23, 1998]

§ 89.7 Treatment of confidential information.

(a) Any manufacturer may assert that some or all of the information submitted pursuant to this part is entitled to confidential treatment as provided by part 2, subpart B of this chapter.

(b) Any claim of confidentiality must accompany the information at the time it is submitted to EPA.

(c) To assert that information submitted pursuant to this part is confidential, a manufacturer must indicate clearly the items of information claimed confidential by marking, circling, bracketing, stamping, or otherwise specifying the confidential information. Furthermore, EPA requests, but does not require, that the submitter also provide a second copy of its submittal from which all confidential information has been deleted. If a need arises to publicly release nonconfidential information, EPA will assume that the submitter has accurately deleted the confidential information from this second copy.

(d) If a claim is made that some or all of the information submitted pursuant to this part is entitled to confidential treatment, the information covered by that confidentiality claim will be disclosed by the Administrator only to the extent and by means of the procedures set forth in part 2, subpart B of this chapter.

(e) Information provided without a claim of confidentiality at the time of submission may be made available to the public by EPA without further notice to the submitter, in accordance with § 2.204(c)(2)(i)(A) of this chapter.

APPENDIX A TO SUBPART A OF PART 89—STATE REGULATION OF NONROAD INTERNAL COMBUSTION ENGINES

This appendix sets forth the Environmental Protection Agency's (EPA's) interpretation of the Clean Air Act regarding the authority of states to regulate the use and operation of nonroad engines.

EPA believes that states are not precluded under section 209 from regulating the use and operation of nonroad engines, such as regulations on hours of usage, daily mass emission limits, or sulfur limits on fuel; nor are permits regulating such operations precluded, once the engine is no longer new. EPA believes that states are precluded from requiring retrofitting of used nonroad engines except that states are permitted to adopt and enforce any such retrofitting requirements identical to California requirements which have been authorized by EPA under section 209 of the Clean Air Act.

[62 FR 67736, Dec. 30, 1997]

Subpart B—Emission Standards and Certification Provisions

§ 89.101 Applicability.

The requirements of subpart B are applicable to all new nonroad compression-ignition engines subject to the provisions of subpart A of part 89, pursuant to the schedule delineated in § 89.102.

[59 FR 31335, June 17, 1994. Redesignated at 63 FR 56995, Oct. 23, 1998]

§ 89.102 Effective dates, optional inclusion, flexibility for equipment manufacturers.

(a) This subpart applies to all engines described in § 89.101 with the following power rating and manufactured after the following dates:

(1) Less than 19 kW and manufactured on or after January 1, 2000;

(2) Greater than or equal to 19 kW but less than 37 kW and manufactured on or after January 1, 1999;

(3) Greater than or equal to 37 kW but less than 75 kW and manufactured on or after January 1, 1998;

(4) Greater than or equal to 75 kW but less than 130 kW and manufactured on or after January 1, 1997;

(5) Greater than or equal to 130 kW but less than or equal to 560 kW and manufactured on or after January 1, 1996;

(6) Greater than 560 kW and manufactured on or after January 1, 2000.

(b) A manufacturer can optionally certify engines manufactured up to one calendar year prior to the effective date of mandatory certification to earn emission credits under the averaging, banking, and trading program. Such optionally certified engines are subject to all provisions relating to mandatory certification and enforcement described in this part.

(c) Engines meeting the voluntary standards described in § 89.112(f) may be designated as Blue Sky Series engines through the 2004 model year.

(d) *Implementation flexibility for equipment and vehicle manufacturers and post-manufacture marinizers.* Nonroad equipment and vehicle manufacturers and post-manufacture marinizers may take any of the otherwise prohibited actions identified in § 89.1003(a)(1) with respect to nonroad equipment and vehicles and marine diesel engines, subject to the requirements of paragraph (e) of this section. The following allowances apply separately to each engine power category subject to standards under § 89.112:

(1) *Percent-of-production allowances. (i) Equipment rated at or above 37 kW.* For nonroad equipment and vehicles with engines rated at or above 37 kW, a manufacturer may take any of the actions identified in § 89.1003(a)(1) for a portion of its U.S.-directed production volume of such equipment and vehicles during the seven years immediately following the date on which Tier 2 engine standards first apply to engines used in such equipment and vehicles, provided that the seven-year sum of these portions in each year, as expressed as a percentage for each year, does not exceed 80, and provided that all such equipment and vehicles or equipment contain Tier 1 engines;

(ii) *Equipment rated under 37 kW.* For nonroad equipment and vehicles and marine diesel engines with engines rated under 37 kW, a manufacturer may take any of the actions identified in § 89.1003(a)(1) for a portion of its U.S.-directed production volume of such equipment and vehicles during the seven years immediately following the date on which Tier 1 engine standards first apply to engines used in such equipment and vehicles, provided that the seven-year sum of these portions in each year, as expressed as a percentage for each year, does not exceed 80.

(2) *Small volume allowances.* A nonroad equipment or vehicle manufacturer or post-manufacture marinizer may exceed the production percentages in paragraph (d)(1) of this section, provided that in each regulated power category the manufacturer's total of excepted nonroad equipment and vehicles and marine diesel engines:

(i) Over the years in which the percent-of-production allowance applies does not exceed 100 units times the number of years in which the percent-of-production allowance applies; and

(ii) Does not exceed 200 units in any year; and

(iii) Does not use engines from more than one engine family, or, for excepted equipment vehicles, and marine diesel engines using engines not belonging to any engine family, from more than one engine manufacturer.

(3) *Inclusion of previous-tier engines.* Nonroad equipment and vehicles and marine diesel engines built with previous tier or noncertified engines under the existing inventory provisions of § 89.1003(b)(4) need not be included in determining compliance with paragraphs (d)(1) and (d)(2) of this section.

(e) *Recordkeeping and calculation to verify compliance.* The following shall apply to nonroad equipment or vehicle manufacturers and post-manufacture marinizers who produce excepted equipment or vehicles or marine diesel engines under the provisions of paragraph (d) of this section:

(1) For each power category in which excepted nonroad equipment or vehicles or marine diesel engines are produced, a calculation to verify compliance with the requirements of paragraph (d) of this section shall be made by the nonroad equipment or vehicle manufacturer or post-manufacture marinizer. This calculation shall be made no later than December 31 of the year following the last year in which allowances are used, and shall be based on actual production information from the subject years. If both the percent-of-production and small volume allowances have been exceeded, then the manufacturer is in violation of section 203 of the Act and § 89.1003, except as provided under paragraphs (f) and (h) of this section.

(2) A nonroad equipment or vehicle manufacturer or post-manufacture marinizer shall keep records of all nonroad equipment and vehicles and marine diesel engines excepted under the provisions of paragraph (d) of this section, for each power category in which exceptions are taken. These

records shall include equipment and engine model numbers, serial numbers, and dates of manufacture, and engine rated power. In addition, the manufacturer shall keep records sufficient to demonstrate the verifications of compliance required in paragraph (e)(1) of this section. All records shall be kept until at least two full years after the final year in which allowances are available for each power category, and shall be made available to EPA upon request.

(f) *Hardship relief.* Nonroad equipment and vehicle manufacturers and post-manufacture marinizers may take any of the otherwise prohibited actions identified in § 89.1003(a)(1) if approved by the Administrator, and subject to the following requirements:

(1) Application for relief must be submitted to the Engine Programs and Compliance Division of the EPA in writing prior to the earliest date in which the applying manufacturer would be in violation of § 89.1003. The manufacturer must submit evidence showing that the requirements for approval have been met.

(2) The applying manufacturer must not be the manufacturer of the engines used in the equipment for which relief is sought. This requirement does not apply to post-manufacture marinizers.

(3) The conditions causing the impending violation must not be substantially the fault of the applying manufacturer.

(4) The conditions causing the impending violation must be such that the applying manufacturer will experience serious economic hardship if relief is not granted.

(5) The applying manufacturer must demonstrate that no allowances under paragraph (d) of this section will be available to avoid the impending violation.

(6) Any relief granted must begin within one year after the implementation date of the standard applying to the engines being used in the equipment, or to the marine diesel engines, for which relief is requested, and may not exceed one year in duration.

(7) The Administrator may impose other conditions on the granting of relief including provisions to recover the lost environmental benefit.

(g) *Allowance for the production of engines.* Engine manufacturers may take any of the otherwise prohibited actions identified in § 89.1003(a)(1) with regard to uncertified engines or Tier 1 engines, as appropriate, if the engine manufacturer has received written assurance from the equipment manufacturer that the engine is required to meet the demand for engines created under paragraph (d), (f), or (h) of this section.

(h) *Alternative Flexibility for Post-Manufacture Marinizers.* Post-manufacture marinizers may elect to delay the effective date of the Tier 1 standards in § 89.112 for marine diesel engines rated under 37 kW by one year, instead of using the provisions of paragraphs (d) and (f) of this section. Post-manufacture marinizers wishing to take advantage of this provision must inform the Director of the Engine Programs and Compliance Division of their intent to do so in writing before the date that the standards would otherwise take effect.

[59 FR 31335, June 17, 1994. Redesignated and amended at 63 FR 56995, 56997, Oct. 23, 1998]

§ 89.103 Definitions.

The definitions in subpart A of part 89 apply to this subpart. All terms not defined herein or in subpart A have the meaning given them in the Act.

[59 FR 31335, June 17, 1994. Redesignated at 63 FR 56995, Oct. 23, 1998]

§ 89.104 Useful life, recall, and warranty periods.

(a) The useful life is based on the rated power and rated speed of the engine.

(1) For all engines rated under 19 kW, and for constant speed engines rated under 37 kW with rated speeds greater than or equal to 3,000 rpm, the useful life is a period of 3,000 hours or five years of use, whichever first occurs.

(2) For all other engines rated at or above 19 kW and under 37 kW, the useful life is a period of 5,000 hours or seven years of use, whichever first occurs.

(3) For all engines rated at or above 37 kW, the useful life is a period of 8,000 hours of operation or ten years of use, whichever first occurs.

(b) Engines are subject to recall testing for a period based on the rated power and rated speed of the engines. However, in a recall, engines in the subject class or category would be subject to recall regardless of actual years or hours of operation.

(1) For all engines rated under 19 kW, and for constant speed engines rated under 37 kW with rated speeds greater than or equal to 3,000 rpm, the engines are subject to recall testing for a period of 2,250 hours or four years of use, whichever first occurs.

(2) For all other engines rated at or above 19 kW and under 37 kW, the engines are subject to recall for a period of 3,750 hours or five years of use, whichever first occurs.

(3) For all engines rated at or above 37 kW, the engines are subject to recall for a period of 6,000 hours of operation or seven years of use, whichever first occurs.

(c) The warranty periods for warranties imposed by the Clean Air Act and § 89.1007 for all engines rated under 19 kW, and for constant speed engines rated under 37 kW with rated speeds greater than or equal to 3,000 rpm, are 1,500 hours of operation or two years of use, whichever first occurs. For all other engines, the warranty periods for warranties imposed by the Clean Air Act and § 89.1007 are 3,000 hours of operation or five years of use, whichever first occurs.

(d) Manufacturers may apply to the Administrator for approval for a shorter useful life period for engines that are subject to severe service in seasonal equipment, or are designed specifically for lower useful life hours to match equipment life. Such an application must be made prior to certification.

[59 FR 31335, June 17, 1994. Redesignated and amended at 63 FR 56995, 56998, Oct. 23, 1998]

§ 89.105 Certificate of conformity.

Every manufacturer of a new nonroad compression-ignition engine must obtain a certificate of conformity covering the engine family, as described in § 89.116. The certificate of conformity must be obtained from the Administrator prior to selling, offering for sale, introducing into commerce, or importing into the United States the new nonroad compression-ignition engine for each model year.

[59 FR 31335, June 17, 1994. Redesignated at 63 FR 56995, Oct. 23, 1998]

§ 89.106 Prohibited controls.

(a) An engine may not be equipped with an emission control system for the purpose of complying with emission standards if such system will cause or contribute to an unreasonable risk to public health, welfare, or safety in its operation or function.

(b) An engine with an emission control system may not emit any noxious or toxic substance which would not be emitted in the operation of such engine in the absence of such system except as specifically permitted by regulation.

[59 FR 31335, June 17, 1994. Redesignated at 63 FR 56995, Oct. 23, 1998]

§ 89.107 Defeat devices.

(a) An engine may not be equipped with a defeat device.

(b) For purposes of this section, ''defeat device'' means any device, system, or element of design which senses operation outside normal emission test conditions and reduces emission control effectiveness.

(1) Defeat device includes any auxiliary emission control device (AECD) that reduces the effectiveness of the emission control system under conditions which may reasonably be expected to be encountered in normal operation and use unless such conditions are included in the test procedure.

(2) Defeat device does not include such items which either operate only during engine starting or are necessary to protect the engine (or equipment in which it is installed) against damage or accident during its operation.

[59 FR 31335, June 17, 1994. Redesignated at 63 FR 56995, Oct. 23, 1998]

§ 89.108 Adjustable parameters, requirements.

(a) Nonroad engines equipped with adjustable parameters must comply with all requirements of this subpart for any adjustment in the physically adjustable range.

(b) An operating parameter is not considered adjustable if it is permanently sealed or otherwise not normally accessible using ordinary tools.

(c) The Administrator may require that adjustable parameters be set to any specification within its adjustable range for certification, selective enforcement audit, or in-use testing to determine compliance with the requirements of this subpart.

[59 FR 31335, June 17, 1994. Redesignated at 63 FR 56995, Oct. 23, 1998]

§ 89.109 Maintenance instructions and minimum allowable maintenance intervals.

(a) The manufacturer must furnish or cause to be furnished to the ultimate purchaser of each new nonroad engine subject to standards under this part written instructions for the maintenance needed to ensure proper functioning of the emission control system. Paragraphs (b) through (h) of this section do not apply to Tier 1 engines with rated power at or above 37 kW.

(b) Maintenance performed on equipment, engines, subsystems or components used to determine exhaust emission deterioration factors is classified as either emission-related or nonemission-related and each of these can be classified as either scheduled or unscheduled. Further, some emission-related maintenance is also classified as critical emission-related maintenance.

(c) This paragraph (c) specifies emission-related scheduled maintenance for purposes of obtaining durability data for nonroad engines. The maintenance intervals specified below are minimum intervals:

(1) All emission-related scheduled maintenance for purposes of obtaining durability data must occur at the same or longer hours of use intervals as those specified in the manufacturer's maintenance instructions furnished to the ultimate purchaser of the engine under paragraph (a) of this section. This maintenance schedule may be updated as necessary throughout the testing of the engine, provided that no maintenance operation is deleted from the maintenance schedule after the operation has been performed on the test equipment or engine.

(2) Any emission-related maintenance which is performed on equipment, engines, subsystems, or components must be technologically necessary to ensure in-use compliance with the emission standards. The manufacturer must submit data which demonstrate to the Administrator that all of the emission-related scheduled maintenance which is to be performed is technologically necessary. Scheduled maintenance must be approved by the Administrator prior to being performed or being included in the maintenance instructions provided to the purchasers under paragraph (a) of this section.

(i) The Administrator may require longer maintenance intervals than those listed in paragraphs (c)(3) and (c)(4) of this section where the listed intervals are not technologically necessary.

(ii) The Administrator may allow manufacturers to specify shorter maintenance intervals than those listed in paragraphs (c)(3) and (c)(4) of this section where technologically necessary for engines rated under 19 kW, or for constant speed engines rated under 37 kW with rated speeds greater than or equal to 3,000 rpm.

(3) The adjustment, cleaning, repair, or replacement of items listed in paragraphs (c)(3)(i) through (c)(3)(iii) of this section shall occur at 1,500 hours of use and at 1,500-hour intervals thereafter.

(i) Exhaust gas recirculation system-related filters and coolers.

(ii) Positive crankcase ventilation valve.

(iii) Fuel injector tips (cleaning only).

(4) The adjustment, cleaning and repair of items in paragraphs (c)(4)(i) through (c)(4)(vii) of this section shall occur at 3,000 hours of use and at 3,000-hour intervals thereafter for nonroad compression-ignition engines rated under 130 kW, or at 4,500-hour intervals thereafter for nonroad compression-ignition engines rated at or above 130 kW.

(i) Fuel injectors.

(ii) Turbocharger.

(iii) Electronic engine control unit and its associated sensors and actuators.

(iv) Particulate trap or trap-oxidizer system (including related components).

(v) Exhaust gas recirculation system (including all related control valves and tubing) except as otherwise provided in paragraph (c)(3)(i) of this section.

(vi) Catalytic convertor.

(vii) Any other add-on emission-related component (i.e., a component whose sole or primary purpose is to reduce emissions or whose failure will significantly degrade emission control and whose function is not integral to the design and performance of the engine).

(d) Scheduled maintenance not related to emissions which is reasonable and technologically necessary (e.g., oil change, oil filter change, fuel filter change, air filter change, cooling system maintenance, adjustment of idle speed, governor, engine bolt torque, valve lash, injector lash, timing, lubrication of the exhaust manifold heat control valve, etc.) may be performed on durability vehicles at the least frequent intervals recommended by the manufacturer to the ultimate purchaser, (e.g., not the intervals recommended for severe service).

(e) Adjustment of engine idle speed on emission data engines may be performed once before the low-hour emission test point. Any other engine, emission control system, or fuel system adjustment, repair, removal, disassembly, cleaning, or replacement on emission data vehicles shall be performed only with advance approval of the Administrator.

(f) Equipment, instruments, or tools may not be used to identify malfunctioning, maladjusted, or defective engine components unless the same or equivalent equipment, instruments, or tools will be available to dealerships and other service outlets and:

(1) Are used in conjunction with scheduled maintenance on such components; or

(2) Are used subsequent to the identification of a vehicle or engine malfunction, as provided in paragraph (e) of this section for emission data engines; or

(3) Specifically authorized by the Administrator.

(g) All test data, maintenance reports, and required engineering reports shall be compiled and provided to the Administrator in accordance with § 89.124.

(h)(1) The components listed in paragraphs (h)(1)(i) through (h)(1)(vi) of this section are defined as critical emission-related components.

(i) Catalytic converter.

(ii) Electronic engine control unit and its associated sensors and actuators.

(iii) Exhaust gas recirculation system (including all related filters, coolers, control valves, and tubing).

(iv) Positive crankcase ventilation valve.

(v) Particulate trap or trap-oxidizer system.

(vi) Any other add-on emission-related component (i.e., a component whose sole or primary purpose is to reduce emissions or whose failure will significantly degrade emission control and whose function is not integral to the design and performance of the engine).

(2) All critical emission-related scheduled maintenance must have a reasonable likelihood of being performed in use. The manufacturer must show the reasonable likelihood of such maintenance being performed in-use. Critical emission-related scheduled maintenance items which satisfy one of the conditions defined in paragraphs (h)(2)(i) through (h)(2)(vi) of this section will be accepted as having a reasonable likelihood of being performed in use.

(i) Data are presented which establish for the Administrator a connection between emissions and vehicle performance such that as emissions increase due to lack of maintenance, vehicle performance will simultaneously deteriorate to a point unacceptable for typical operation.

(ii) Survey data are submitted which adequately demonstrate to the Administrator with an 80 percent confidence level that 80 percent of such engines already have this critical maintenance item performed in-use at the recommended interval(s).

(iii) A clearly displayed visible signal system approved by the Administrator is installed to alert the equipment operator that maintenance is due. A signal bearing the message ''maintenance

needed'' or ''check engine,'' or a similar message approved by the Administrator, shall be actuated at the appropriate usage point or by component failure. This signal must be continuous while the engine is in operation and not be easily eliminated without performance of the required maintenance. Resetting the signal shall be a required step in the maintenance operation. The method for resetting the signal system shall be approved by the Administrator. The system must not be designed to deactivate upon the end of the useful life of the engine or thereafter.

(iv) A manufacturer may desire to demonstrate through a survey that a critical maintenance item is likely to be performed without a visible signal on a maintenance item for which there is no prior in-use experience without the signal. To that end, the manufacturer may in a given model year market up to 200 randomly selected vehicles per critical emission-related maintenance item without such visible signals, and monitor the performance of the critical maintenance item by the owners to show compliance with paragraph (h)(2)(ii) of this section. This option is restricted to two consecutive model years and may not be repeated until any previous survey has been completed. If the critical maintenance involves more than one engine family, the sample will be sales weighted to ensure that it is representative of all the families in question.

(v) The manufacturer provides the maintenance free of charge, and clearly informs the customer that the maintenance is free in the instructions provided under paragraph (a) of this section.

(vi) The manufacturer uses any other method which the Administrator approves as establishing a reasonable likelihood that the critical maintenance will be performed in-use.

(3) Visible signal systems used under paragraph (h)(2)(iii) of this section are considered an element of design of the emission control system. Therefore, disabling, resetting, or otherwise rendering such signals inoperative without also performing the indicated maintenance procedure is a prohibited act.

[63 FR 56999, Oct. 23, 1998]

§ 89.110 Emission control information label.

(a) The manufacturer must affix at the time of manufacture a permanent and legible label identifying each nonroad engine. The label must meet the following requirements:

(1) Be attached in such a manner that it cannot be removed without destroying or defacing the label;

(2) Be durable and readable for the entire engine life;

(3) Be secured to an engine part necessary for normal engine operation and not normally requiring replacement during engine life;

(4) Be written in English; and

(5) Be located so as to be readily visible to the average person after the engine is installed in the equipment. A supplemental label meeting all the requirements of this section may be attached to a location other than the engine, in cases where the required label must be obscured after the engine is installed in the equipment.

(b) The label must contain the following information:

(1) The heading ''Important Engine Information;''

(2) The full corporate name and trademark of the manufacturer;

(3) EPA standardized engine family designation;

(4) Engine displacement;

(5) Advertised power;

(6) Engine tuneup specifications and adjustments. These should indicate the proper transmission position during tuneup, and accessories (for example, air conditioner), if any, that should be in operation;

(7) Fuel requirements;

(8) Date of manufacture (month and year). The manufacturer may, in lieu of including the date of manufacture on the engine label, maintain a record of the engine manufacture dates. The manufacturer shall provide the date of manufacture records to the Administrator upon request;

(9) Family emission limits (FELs) if applicable;

(10) The statement: ''This engine conforms to [model year] U.S. EPA regulations large nonroad compression- ignition engines;''

(11) Engines belonging to an engine family that has been certified as a constant-speed engine using the test cycle specified in Table 2 of appendix B to subpart E of this part must contain the statement on the label: ''constant-speed only''; and

(12) Engines meeting the voluntary standards described in § 89.112(f)(1) to be designated as Blue Sky Series engines must contain the statement on the label: ''Blue Sky Series''.

(c) Other information concerning proper maintenance and use or indicating compliance or noncompliance with other standards may be indicated on the label.

(d) Each engine must have a legible unique engine identification number permanently affixed to or engraved on the engine.

[59 FR 31335, June 17, 1994. Redesignated and amended at 63 FR 56995, 57000, Oct. 23, 1998]

§ 89.111 Averaging, banking, and trading of exhaust emissions.

Regulations regarding the availability of an averaging, banking, and trading program along with applicable record- keeping requirements are found in subpart C of this part. Participation in the averaging, banking, and trading program is optional.

[59 FR 31335, June 17, 1994. Redesignated at 63 FR 56995, Oct. 23, 1998]

§ 89.112 Oxides of nitrogen, carbon monoxide, hydrocarbon, and particulate matter exhaust emission standards.

(a) Exhaust emission from nonroad engines to which this subpart is applicable shall not exceed the applicable exhaust emission standards contained in Table 1, as follows:

Table 1.—Emission Standards (g/kW-hr)

Rated Power (kW)	Tier	Model Year[1]	NOx	HC	NMHC + NOx	CO	PM
kW<8	Tier 1	2000	—	—	10.5	8.0	1.0
	Tier 2	2005	—	—	7.5	8.0	0.80
8≤kW<19	Tier 1	2000	—	—	9.5	6.6	0.80
	Tier 2	2005	—	—	7.5	6.6	0.80
19≤kW<37	Tier 1	1999	—	—	9.5	5.5	0.80
	Tier 2	2004	—	—	7.5	5.5	0.60
37≤kW<75	Tier 1	1998	9.2	—	—	—	—
	Tier 2	2004	—	—	7.5	5.0	0.40
	Tier 3	2008	—	—	4.7	5.0	
75≤kW<130	Tier 1	1997	9.2	—	—	—	—
	Tier 2	2003	—	—	6.6	5.0	0.30
	Tier 3	2007	—	—	4.0	5.0	
130≤kW<225	Tier 1	1996	9.2	1.3	—	11.4	0.54
	Tier 2	2003	—	—	6.6	3.5	0.20
	Tier 3	2006	—	—	4.0	3.5	
225≤kW<450	Tier 1	1996	9.2	1.3	—	11.4	0.54
	Tier 2	2001	—	—	6.4	3.5	0.20
	Tier 3	2006	—	—	4.0	3.5	
450≤kW≤560	Tier 1	1996	9.2	1.3	—	11.4	0.54
	Tier 2	2002	—	—	6.4	3.5	0.20
	Tier 3	2006	—	—	4.0	3.5	
kW>560	Tier 1	2000	9.2	1.3	—	11.4	0.54
	Tier 2	2006	—	—	6.4	3.5	0.20

[1] The model years listed indicate the model years for which the specified tier of standards take effect.

(b) Exhaust emissions of oxides of nitrogen, carbon monoxide, hydrocarbon, and nonmethane hydrocarbon are measured using the procedures set forth in subpart E of this part.

(c) Exhaust emission of particulate matter is measured using the California Regulations for New 1996 and Later Heavy-Duty Off-Road Diesel Cycle Engines. This procedure is incorporated by reference. See § 89.6.

(d) In lieu of the NO_X standards, NMHC + NO_X standards, and PM standards specified in paragraph (a) of this section, manufacturers may elect to include engine families in the averaging, banking, and trading program, the provisions of which are specified in subpart C of this part. The manufacturer must set a family emission limit (FEL) not to exceed the levels contained in Table 2. The FEL established by the manufacturer serves as the standard for that engine family. Table 2 follows:

Table 2.—Upper Limit for Family Emission Limits (g/kW-hr)

Rated Power (kW)	Tier	Model Year[1]	NOx FEL	NMHC+ NOx FEL	PM FEL
kW<8	Tier 1	2000	—	16.0	1.2
	Tier 2	2005	—	10.5	1.0
8≤kW<19	Tier 1	2000	—	16.0	1.2
	Tier 2	2005	—	9.5	0.80
19≤kW<37	Tier 1	1999	—	16.0	1.2
	Tier 2	2004	—	9.5	0.80
37≤kW<75	Tier 1	1998	14.6	—	—
	Tier 2	2004	—	11.5	1.2
	Tier 3	2008	—	7.5	
75≤kW<130	Tier 1	1997	14.6	—	—
	Tier 2	2003	—	11.5	1.2
	Tier 3	2007	—	6.6	
130≤kW<225	Tier 1	1996	14.6	—	—
	Tier 2	2003	—	10.5	0.54
	Tier 3	2006	—	6.6	
225≤kW<450	Tier 1	1996	14.6	—	—
	Tier 2	2001	—	10.5	0.54
	Tier 3	2006	—	6.4	
450≤kW≤560	Tier 1	1996	14.6	—	—
	Tier 2	2002	—	10.5	0.54
	Tier 3	2006	—	6.4	
kW>560	Tier 1	2000	14.6	—	—
	Tier 2	2006	—	10.5	0.54

[1] The model years listed indicate the model years for which the specified tier of limits take effect.

(e) Naturally aspirated nonroad engines to which this subpart is applicable shall not discharge crankcase emissions into the ambient atmosphere, unless such crankcase emissions are permanently routed into the exhaust and included in all exhaust emission measurements. This provision applies to all

Tier 2 engines and later models. This provision does not apply to engines using turbochargers, pumps, blowers, or superchargers for air induction.

(f) The following paragraphs define the requirements for low-emitting Blue Sky Series engines:

(1) *Voluntary standards.* Engines may be designated ''Blue Sky Series'' engines through the 2004 model year by meeting the voluntary standards listed in Table 3, which apply to all certification and in-use testing, as follows:

TABLE 3—VOLUNTARY EMISSION STANDARDS (G/KW-HR)

Rated Brake Power (kW)	NMHC+NO_X	PM
kW<8	4.6	0.48
8≤kW<19	4.5	0.48
19≤kW<37	4.5	0.36
37≤kW<75	4.7	0.24
75≤kW<130	4.0	0.18
130≤kW≤560	4.0	0.12
kW>560	3.8	0.12

(2) *Additional standards.* Blue Sky Series engines are subject to all provisions that would otherwise apply under this part, except as specified in paragraph (f)(3) of this section.

(3) *Test procedures.* NO_X, NMHC, and PM emissions are measured using the procedures set forth in 40 CFR part 86, subpart N, in lieu of the procedures set forth in subpart E of this part. CO emissions may be measured using the procedures set forth either in 40 CFR part 86, subpart N, or in Subpart E of this part. Manufacturers may use an alternate procedure to demonstrate the desired level of emission control if approved in advance by the Administrator. Engines meeting the requirements to qualify as Blue Sky Series engines must be capable of maintaining a comparable level of emission control when tested using the procedures set forth in paragraph (c) of this section and subpart E of this part. The numerical emission levels measured using the procedures from subpart E of this part may be up to 20 percent higher than those measured using the procedures from 40 CFR part 86, subpart N, and still be considered comparable.

[59 FR 31335, June 17, 1994. Redesignated and amended at 63 FR 56995, 57000, Oct. 23, 1998]

§ 89.113 Smoke emission standard.

(a) Exhaust opacity from compression-ignition nonroad engines for which this subpart is applicable must not exceed:

(1) 20 percent during the acceleration mode;

(2) 15 percent during the lugging mode; and

(3) 50 percent during the peaks in either the acceleration or lugging modes.

(b) Opacity levels are to be measured and calculated as set forth in 40 CFR part 86, subpart I. Notwithstanding the provisions of 40 CFR part 86, subpart I, two-cylinder nonroad engines may be tested using an exhaust muffler that is representative of exhaust mufflers used with the engines in use.

(c) The following engines are exempt from the requirements of this section:

(1) Single-cylinder engines;

(2) Propulsion marine diesel engines; and

(3) Constant-speed engines.

[59 FR 31335, June 17, 1994. Redesignated and amended at 63 FR 56995, 57003, Oct. 23, 1998]

§ 89.114 Special and alternate test procedures.

(a) *Special test procedures.* The Administrator may, on the basis of written application by a manufacturer, establish special test procedures other than those set forth in this part, for any nonroad engine that the Administrator determines is not susceptible to satisfactory testing under the specified test procedures set forth in subpart E of this part or 40 CFR part 86, subpart I.

(b) *Alternate test procedures.* (1) A manufacturer may elect to use an alternate test procedure provided that it yields equivalent results to the specified procedures, its use is approved in advance by the Administrator, and the basis for equivalent results with the specified test procedures is fully described in the manufacturer's application.

(2) The Administrator may reject data generated under alternate test procedures which do not correlate with data generated under the specified procedures.

[59 FR 31335, June 17, 1994. Redesignated and amended at 63 FR 56995, 57003, Oct. 23, 1998]

§ 89.115 Application for certificate.

(a) For each engine family that complies with all applicable standards and requirements, the engine manufacturer must submit to the Administrator a completed application for a certificate of conformity.

(b) The application must be approved and signed by the authorized representative of the manufacturer.

(c) The application will be updated and corrected by amendment as provided for in § 89.123 to accurately reflect the manufacturer's production.

(d) *Required content.* Each application must include the following information:

(1) A description of the basic engine design including, but not limited to, the engine family specifications, the provisions of which are contained in § 89.116;

(2) An explanation of how the emission control system operates, including a detailed description of all emission control system components, each auxiliary emission control device (AECD), and all fuel system components to be installed on any production or test engine(s);

(3) Proposed test fleet selection and the rationale for the test fleet selection;

(4) Special or alternate test procedures, if applicable;

(5) The period of operation necessary to accumulate service hours on test engines and stabilize emission levels;

(6) A description of all adjustable operating parameters (including, but not limited to, injection timing and fuel rate), including the following:

(i) The nominal or recommended setting and the associated production tolerances;

(ii) The intended physically adjustable range;

(iii) The limits or stops used to establish adjustable ranges;

(iv) Production tolerances of the limits or stops used to establish each physically adjustable range; and

(v) Information relating to why the physical limits or stops used to establish the physically adjustable range of each parameter, or any other means used to inhibit adjustment, are effective in preventing adjustment of parameters to settings outside the manufacturer's intended physically adjustable ranges on in-use engines;

(7) For families participating in the averaging, banking, and trading program, the information specified in subpart C of this part;

(8) A description of the test equipment and fuel proposed to be used;

(9) All test data obtained by the manufacturer on each test engine;

(10) An unconditional statement certifying that all engines in the engine family comply with all requirements of this part and the Clean Air Act.

(e) At the Administrator's request, the manufacturer must supply such additional information as may be required to evaluate the application including, but not limited to, projected nonroad engine production.

(f)(1) The Administrator may modify the information submission requirements of paragraph (d) of this section, provided that all of the information specified therein is maintained by the engine manufacturer as required by § 89.124, and amended, updated, or corrected as necessary.

(2) For the purposes of this paragraph, § 89.124(a)(1) includes all information specified in paragraph (d) of this section whether or not such information is actually submitted to the Administrator for any particular model year.

(3) The Administrator may review an engine manufacturer's records at any time. At the Administrator's discretion, this review may take place either at the manufacturer's facility or at another facility designated by the Administrator.

[59 FR 31335, June 17, 1994, as amended at 61 FR 20741, May 8, 1996. Redesignated at 63 FR 56995, Oct. 23, 1998]

§ 89.116 Engine families.

(a) A manufacturer's product line is divided into engine families that are comprised of engines expected to have similar emission characteristics throughout their useful life periods.

(b) The following characteristics distinguish engine families:

(1) Fuel;

(2) Cooling medium;

(3) Method of air aspiration;

(4) Method of exhaust aftertreatment (for example, catalytic converter or particulate trap);

(5) Combustion chamber design;

(6) Bore;

(7) Stroke;

(8) Number of cylinders, (engines with aftertreatment devices only); and

(9) Cylinder arrangement (engines with aftertreatment devices only).

(c) Upon a showing by the manufacturer that the useful life period emission characteristics are expected to be similar, engines differing in one or more of the characteristics in paragraph (b) of this section may be grouped in the same engine family.

(d) Upon a showing by the manufacturer that the expected useful life period emission characteristics will be different, engines identical in all the characteristics of paragraph (b) of this section may be divided into separate engine families.

(e)(1) This paragraph (e) applies only to the placement of Tier 1 engines with power ratings under 37 kW into engine families. The provisions of paragraphs (a) through (d) of this section also apply to these engines. The power categories referred to in this paragraph (e) are those for which separate standards or implementation dates are described in § 89.112.

(2) A manufacturer may place engines with power ratings in one power category into an engine family comprised of engines with power ratings in another power category, and consider all engines in the engine family as being in the latter power category for the purpose of determining compliance with the standards and other requirements of this part, subject to approval in advance by the Administrator and the following restrictions:

(i) The engines that have power ratings outside the engine family's power category must constitute less than half of the engine family's sales in each model year for which the engine family grouping is made; and

(ii) The engines that have power ratings outside the engine family's power category must have power ratings that are within ten percent of either of the two power levels that define the engine family's power category.

(3) The restrictions described in paragraphs (e)(2)(i) and (e)(2)(ii) of this section do not apply if the emissions standards and other requirements of this part are at least as stringent for the engine family's power category as those of the other power categories containing engines in the engine family.

[59 FR 31335, June 17, 1994. Redesignated and amended at 63 FR 56995, 57003, Oct. 23, 1998]

§ 89.117 Test fleet selection.

(a) The manufacturer must select for testing, from each engine family, the engine with the most fuel injected per stroke of an injector, primarily at the speed of maximum torque and secondarily at rated speed.

(b) Each engine in the test fleet must be constructed to be representative of production engines.

(c) After review of the manufacturer's test fleet, the Administrator may select from the available fleet one additional test engine from each engine family.

(d) For establishing deterioration factors, the manufacturer shall select the engines, subsystems, or components to be used to determine exhaust emission deterioration factors for each engine-family control system combination. Engines, subsystems, or components shall be selected so that their emission deterioration characteristics are expected to represent those of in-use engines, based on good engineering judgment.

[59 FR 31335, June 17, 1994. Redesignated and amended at 63 FR 56995, 57003, Oct. 23, 1998]

§ 89.118 Deterioration factors and service accumulation.

This section applies to service accumulation used to determine deterioration factors and service accumulation used to condition test engines. Paragraphs (a) and (b) of this section apply only for service accumulation used to condition test engines. Paragraph (e) of this section applies only for service accumulation used to determine deterioration factors. Paragraphs (c) and (d) of this section apply for all service accumulation required by this part.

(a)(1) Each test engine in the test fleet must be operated with all emission control systems operating properly for a period sufficient to stabilize emissions.

(2) A manufacturer may elect to consider as stabilized emission levels from engines with no more than 125 hours of service.

(b) No maintenance, other than recommended lubrication and filter changes, may be performed during service accumulation without the Administrator's approval.

(c) Service accumulation should be performed in a manner using good engineering judgment to ensure that emissions are representative of in-use engines.

(d) The manufacturer must maintain, and provide to the Administrator if requested, records stating the rationale for selecting the service accumulation period and records describing the method used to accumulate service hours on the test engine(s).

(e) This paragraph (e) describes service accumulation and alternative requirements for the purpose of developing deterioration factor.

(1) *Service accumulation on engines, subsystems, or components selected by the manufacturer under § 89.117(d).* The manufacturer shall describe the form and extent of this service accumulation in the application for certification.

(2) *Determination of exhaust emission deterioration factors.* The manufacturer shall determine the deterioration factors in accordance with the applicable provisions of this part based on service accumulation and related testing, according to the manufacturer's procedures, except as provided in paragraph (e)(3) of this section.

(3) *Alternatives to service accumulation and testing for the determination of a deterioration factor.* A written explanation of the appropriateness of using an alternative must be included in the application for certification.

(i) *Carryover and carryacross of durability emission data.* In lieu of testing an emission data or durability data engine selected under § 89.117(d), a manufacturer may, with Administrator approval, use exhaust emission deterioration data on a similar engine for which certification to the same standard has previously been obtained or for which all applicable data required under § 89.124 has previously been submitted. This data must be submitted in the application for certification.

(ii) *Use of on-highway deterioration data.* In the case where a manufacturer produces a certified on-highway engine that is similar to the nonroad engine to be certified, deterioration data from the on-highway engine may be applied to the nonroad engine. This application of deterioration data from an on-highway engine to a nonroad engine is subject to Administrator approval, and the determination of whether the engines are similar must be based on good engineering judgment.

(iii) *Engineering analysis for established technologies.* (A) In the case where an engine family uses established technology, an analysis based on good engineering practices may be used in lieu of testing to determine a deterioration factor for that engine family, subject to Administrator approval.

(B) Engines for which the certification levels are not at or below the Tier 3 NMHC+NO_X standards described in § 89.112 are considered established technology, except as provided in paragraph (e)(3)(iii)(D) of this section.

(C) Manufacturers may petition the Administrator to consider an engine with a certification level below the Tier 3 +NO_X standards as established technology. This petition must be based on proof that the technology used is not significantly different than that used on engines that have certification levels that are not below the Tier 3 NMHC+NO_X levels.

(D) Engines using exhaust gas recirculation or aftertreatment are excluded from the provision set forth in paragraphs (e)(3)(iii)(A) through (e)(3)(iii)(C) of this section.

(E) The manufacturer shall provide a written statement to the Administrator that all data, analyses, test procedures, evaluations, and other documents, on which the deterioration factor is based, are available to the Administrator upon request.

(iv) *Interim provision for engines rated under 37 kW.* For model year 1999 and 2000 engines rated under 37 kW, manufacturers may determine deterioration factors based on good engineering

judgement and reasonably available information. The manufacturer must maintain and provide to the Administrator, if requested, all information used to determine deterioration factors for these engines.

[59 FR 31335, June 17, 1994. Redesignated and amended at 63 FR 56995, 57003, Oct. 23, 1998]

§ 89.119 Emission tests.

(a) *Manufacturer testing.* (1) Upon completion of service accumulation, the manufacturer must test each test engine using the specified test procedures, except as provided in § 89.114. The procedures to be used are set forth in:

(i) Subpart E of this part;

(ii) The California Regulations for New 1996 and Later Heavy-Duty Off-Road Diesel Cycle Engines. This procedure has been incorporated by reference. See § 89.6; and

(iii) Part 86, subpart I of this chapter.

(2) Each test engine must be configured to be representative of actual in-use operation. The Administrator may specify the adjustment of any adjustable parameter. All test results must be reported to the Administrator.

(b) *Confirmatory testing.* The Administrator may conduct confirmatory testing or other testing on any test engine. The manufacturer must deliver test engines as directed by the Administrator. When the Administrator conducts confirmatory testing or other testing, those test results are used to determine compliance with emission standards.

(c) *Use of carryover test data.* In lieu of testing to certify an engine family for a given model year, the manufacturer may submit, with the Administrator's approval, emission test data used to certify that engine family in previous years. This ''carryover'' data is only allowable if the submitted test data show that the test engine would comply with the emission standard(s) for the model year for which certification is being sought.

(d) The provisions of this paragraph (d) apply only to Tier 1 nonroad engines without exhaust aftertreatment rated at or above 37 kW.

(1) Particulate emission measurements from Tier 1 nonroad engines without exhaust aftertreatment rated at or above 37 kW may be adjusted to a sulfur content of 0.05 weight percent.

(2) Adjustments to the particulate measurement shall be made using the following equation:

$$PM_{adj}=PM-[BSFC \times 0.0917 \times (FSF-0.0005)]$$

Where:

PM_{adj}=adjusted measured PM level [g/Kw-hr].

PM=measured weighted PM level [g/Kw-hr].

BSFC=measured brake specific fuel consumption [G/Kw-hr].

FSF=fuel sulfur weight fraction.

(3) Where a manufacturer certifies using test fuel with a sulfur content less than or equal to 0.050 weight percent, EPA shall not use emission data collected using test fuel with a sulfur content greater than 0.050 weight percent to determine compliance with the Tier 1 PM standards.

(4) Where a manufacturer certifies using test fuel with a sulfur content greater than 0.050 weight percent, EPA shall not use emission data collected using test fuel with a sulfur content greater than 0.050 weight percent to determine compliance with the Tier 1 PM standards, unless EPA adjusts the PM measurement using the equation specified in paragraph (d)(2) of this section.

[59 FR 31335, June 17, 1994. Redesignated and amended at 63 FR 56995, 57004, Oct. 23, 1998]

§ 89.120 Compliance with emission standards.

(a) If all test engines representing an engine family have emissions less than or equal to each emission standard, that family complies with the emission standards.

(b) If any test engine representing an engine family has emissions greater than each emission standard, that family will be deemed not in compliance with the emission standard(s).

(c) For each nonroad engine family, except Tier 1 engine families with rated power at or above 37 kW that do not employ aftertreatment, a deterioration factor must be determined and applied.

(1) The applicable exhaust emission standards (or family emission limits, as appropriate) for nonroad compression-ignition engines apply to the

emissions of engines for their useful life.

(2) [Reserved]

(3)(i) This paragraph (c)(3) describes the procedure for determining compliance of an engine with emission standards (or family emission limits, as appropriate), based on deterioration factors supplied by the manufacturer. The NMHC + NO_X deterioration factors shall be established based on the sum of the pollutants, except as provided in paragraph (c)(3)(iv) of this section. When establishing deterioration factors for NMHC + NO_X, a negative deterioration (emissions decrease from the official emissions test result) for one pollutant may not offset deterioration of the other pollutant.

(ii) Separate emission deterioration factors, determined by the manufacturer according to the requirements of § 89.118, shall be provided in the certification application for each engine-system combination. Separate deterioration factors shall be established for each regulated pollutant, except that a combined NMHC + NO_X deterioration factor shall be established for compression-ignition nonroad engines not utilizing aftertreatment technology. For smoke testing, separate deterioration factors shall also be established for the acceleration mode (designated as ''A''), the lugging mode (designated as ''B''), and peak opacity (designated as ''C'').

(iii) *Compression-ignition nonroad engines not utilizing aftertreatment technology (e.g., particulate traps).* For CO, NMHC + NO_X, and particulate, the official exhaust emission results for each emission data engine at the selected test point shall be adjusted by addition of the appropriate deterioration factor. However, if the deterioration factor supplied by the manufacturer is less than zero, it shall be zero for the purposes of this paragraph (c)(3)(iii).

(iv) *Compression-ignition nonroad engines utilizing aftertreatment technology (e.g., particulate traps).* For CO, NMHC + NO_X, and particulate, the official exhaust emission results for each emission data engine at the selected test point shall be adjusted by multiplication by the appropriate deterioration factor. Separate NMHC and NO_X deterioration factors shall be applied to the results for these pollutants prior to combining the results. If the deterioration factor supplied by the manufacturer is less than one, it shall be one for the purposes of this paragraph (c)(3)(iv).

(v) For acceleration smoke (''A''), lugging smoke (''B''), and peak opacity (''C''), the official exhaust emission results for each emission data engine at the selected test point shall be adjusted by the addition of the appropriate deterioration factor. However if the deterioration supplied by the manufacturer is less than zero, it shall be zero for the purposes of this paragraph (c)(3)(v).

(vi) The emission values to compare with the standards (or family emission limits, as appropriate) shall be the adjusted emission values of paragraphs (c)(3)(iii) through (v) of this section, rounded to the same number of significant figures as contained in the applicable standard in accordance with ASTM E29–93a, for each emission data engine. This procedure has been incorporated by reference at § 89.6.

(4) Every test engine of an engine family must comply with all applicable standards (or family emission limits, as appropriate), as determined in paragraph (c)(3)(vi) of this section, before any engine in that family will be certified.

(d) For engine families included in the averaging, banking, and trading program, the families' emission limits (FELs) are used in lieu of the applicable federal emission standard.

(e) For the purposes of setting an NMHC + NO_X certification level or FEL, one of the following options shall be used for the determination of NMHC for an engine family. The manufacturer must declare which option is used in its application for certification of that engine family.

(1) The manufacturer may assume that up to two percent of the measured THC is methane (NMHC = 0.98 × THC).

(2) The manufacturer may measure NMHC emissions using a method approved by the Administrator prior to the start of testing. This option allows the determination of NMHC emissions by subtracting measured methane

emissions from measured THC emissions.

[59 FR 31335, June 17, 1994. Redesignated and amended at 63 FR 56995, 57004, Oct. 23, 1998]

§ 89.121 Certificate of conformity effective dates.

The certificate of conformity is valid from the date of issuance by EPA until 31 December of the model year or calendar year for which it is issued.

[59 FR 31335, June 17, 1994. Redesignated at 63 FR 56995, Oct. 23, 1998]

§ 89.122 Certification.

(a) If, after a review of the manufacturer's application, request for certificate, information obtained from any inspection, and such other information as the Administrator may require, the Administrator determines that the application is complete and that the engine family meets the requirements of this part and the Clean Air Act, the Administrator shall issue a certificate of conformity.

(b) If, after a review of the information described in paragraph (a) of this section, the Administrator determines that the requirements of this part and the Clean Air Act have not been met, the Administrator will deny certification. The Administrator must give a written explanation when certification is denied. The manufacturer may request a hearing on a denial.

[59 FR 31335, June 17, 1994. Redesignated at 63 FR 56995, Oct. 23, 1998]

§ 89.123 Amending the application and certificate of conformity.

(a) The manufacturer of nonroad compression-ignition engines must notify the Administrator when changes to information required to be described in the application for certification are to be made to a product line covered by a certificate of conformity. This notification must include a request to amend the application or the existing certificate of conformity. Except as provided in paragraph (e) of this section, the manufacturer shall not make said changes or produce said engines prior to receiving approval from EPA.

(b) A manufacturer's request to amend the application or the existing certificate of conformity shall include the following information:

(1) A full description of the change to be made in production or of the engine to be added;

(2) Engineering evaluations or data showing that engines as modified or added will comply with all applicable emission standards; and

(3) A determination whether the manufacturer's original test fleet selection is still appropriate, and if the original test fleet selection is determined not to be appropriate, proposed test fleet selection(s) representing the engines changed or added which would have been required if the engines had been included in the original application for certification.

(c) The Administrator may require the manufacturer to perform tests on the engine representing the engine to be added or changed.

(d) *Decision by Administrator*. (1) Based on the description of the proposed amendment and data derived from such testing as the Administrator may require or conduct, the Administrator will determine whether the proposed change or addition would still be covered by the certificate of conformity then in effect.

(2) If the Administrator determines that the change or new engine(s) meets the requirements of this subpart and the Act, the appropriate certificate of conformity is amended.

(3) If the Administrator determines that the changed or new engine(s) does not meet the requirements of this subpart and the Act, the certificate of conformity will not be amended. The Administrator shall provide a written explanation to the manufacturer of the decision not to amend the certificate. The manufacturer may request a hearing on a denial.

(e) A manufacturer may make changes in or additions to production engines concurrently with notifying the Administrator as required by paragraph (a) of this section, if the manufacturer complies with the following requirements:

(1) In addition to the information required in paragraph (b) of this section, the manufacturer must supply supporting documentation, test data, and engineering evaluations as appropriate

to demonstrate that all affected engines will still meet applicable emission standards.

(2) If, after a review, the Administrator determines additional testing is required, the manufacturer must provide required test data within 30 days or cease production of the affected engines.

(3) If the Administrator determines that the affected engines do not meet applicable requirements, the Administrator will notify the manufacturer to cease production of the affected engines and to recall and correct at no expense to the owner all affected engines previously produced.

(4) Election to produce engines under this paragraph will be deemed to be a consent to recall all engines which the Administrator determines do not meet applicable standards and to cause such nonconformity to be remedied at no expense to the owner.

[59 FR 31335, June 17, 1994. Redesignated at 63 FR 56995, Oct. 23, 1998]

§ 89.124 Record retention, maintenance, and submission.

(a) The manufacturer of any nonroad compression-ignition engine must maintain the following adequately organized records:

(1) Copies of all applications filed with the Administrator.

(2) A detailed history of each test engine used for certification including the following:

(i) A description of the test engine's construction, including a general description of the origin and buildup of the engine, steps taken to ensure that it is representative of production engines, description of components specially built for the test engine, and the origin and description of all emission-related components;

(ii) A description of the method used for service accumulation, including date(s) and the number of hours accumulated;

(iii) A description of all maintenance, including modifications, parts changes, and other servicing performed, and the date(s) and reason(s) for such maintenance;

(iv) A description of all emission tests performed (except tests performed by the EPA directly) including routine and standard test documentation, as specified in subpart E of this part, date(s) and the purpose of each test;

(v) A description of all tests performed to diagnose engine or emission control performance, giving the date and time of each and the reason(s) for the test; and

(vi) A description of any significant event(s) affecting the engine during the period covered by the history of the test engine but not described by an entry under one of the previous paragraphs of this section.

(3) Information required to be kept by the manufacturer in § 89.118(e)(3) for alternatives to service accumulation and testing for the determination of a deterioration factor.

(b) Routine emission test data, such as those reporting test cell temperature and relative humidity at start and finish of test and raw emission results from each mode or test phase, must be retained for a period of one year after issuance of all certificates of conformity to which they relate. All other information specified in paragraph (a) of this section must be retained for a period of eight years after issuance of all certificates of conformity to which they relate.

(c) Records may be kept in any format and on any media, provided that at the Administrator's request, organized, written records in English are promptly supplied by the manufacturer.

(d) The manufacturer must supply, at the Administrator's request, copies of any engine maintenance instructions or explanations issued by the manufacturer.

[59 FR 31335, June 17, 1994. Redesignated and amended at 63 FR 56995, 57005, Oct. 23, 1998]

§ 89.125 Production engines, annual report.

(a) Upon the Administrator's request, the manufacturer must supply a reasonable number of production engines for testing and evaluation. These engines must be representative of typical production and must be supplied for testing at such time and place and for such reasonable periods as the Administrator may require.

(b) The manufacturer must annually, within 30 days after the end of the model year, notify the Administrator of the number of engines produced by engine family, by gross power, by displacement, by fuel system, and, for engines produced under the provision of § 89.102(g), by engine model and purchaser (or shipping destination for engines used by the engine manufacturer), or by other categories as the Administrator may require.

[59 FR 31335, June 17, 1994. Redesignated and amended at 63 FR 56995, 57005, Oct. 23, 1998]

§ 89.126 Denial, revocation of certificate of conformity.

(a) If, after review of the manufacturer's application, request for certification, information obtained from any inspection, and any other information the Administrator may require, the Administrator determines that one or more test engines do not meet applicable standards (or family emission limits, as appropriate), then the Administrator will notify the manufacturer in writing, setting forth the basis for this determination.

(b) Notwithstanding the fact that engines described in the application may comply with all other requirements of this subpart, the Administrator may deny the issuance of, suspend, or revoke a previously issued certificate of conformity if the Administrator finds any one of the following infractions to be substantial:

(1) The manufacturer submits false or incomplete information;

(2) The manufacturer denies an EPA enforcement officer or EPA authorized representative the opportunity to conduct authorized inspections;

(3) The manufacturer fails to supply requested information or amend its application to include all engines being produced;

(4) The manufacturer renders inaccurate any test data which it submits or otherwise circumvents the intent of the Act or this part;

(5) The manufacturer denies an EPA enforcement officer or EPA authorized representative reasonable assistance (as defined in § 89.129(e)).

(c) If a manufacturer knowingly commits an infraction specified in paragraph (b)(1) or (b)(4) of this section, knowingly commits any other fraudulent act which results in the issuance of a certificate of conformity, or fails to comply with the conditions specified in § 89.203(d), § 89.206(c), § 89.209(c) or § 89.210(g), the Administrator may deem such certificate void ab initio.

(d) When the Administrator denies, suspends, revokes, or voids ab initio a certificate of conformity the manufacturer will be provided a written determination. The manufacturer may request a hearing under § 89.127 on the Administrator's decision.

(e) Any suspension or revocation of a certificate of conformity shall extend no further than to forbid the introduction into commerce of engines previously covered by the certification which are still in the hands of the manufacturer, except in cases of such fraud or other misconduct that makes the certification invalid ab initio.

[59 FR 31335, June 17, 1994. Redesignated and amended at 63 FR 56995, 57005, Oct. 23, 1998]

§ 89.127 Request for hearing.

(a) A manufacturer may request a hearing on the Administrator's denial, suspension, voiding ab initio or revocation of a certificate of conformity.

(b) The manufacturer's request must be filed within 30 days of the Administrator's decision, be in writing, and set forth the manufacturer's objections to the Administrator's decision and data to support the objections.

(c) If, after review of the request and supporting data, the Administrator finds that the request raises a substantial and factual issue, the Administrator will grant the manufacturer's request for a hearing.

[59 FR 31335, June 17, 1994. Redesignated at 63 FR 56995, Oct. 23, 1998]

§ 89.128 Hearing procedures.

(a)(1) After granting a request for a hearing the Administrator shall designate a Presiding Officer for the hearing.

(2) The hearing will be held as soon as practicable at a time and place determined by the Administrator or by the Presiding Officer.

(3) The Administrator may, at his or her discretion, direct that all argument

and presentation of evidence be concluded within a specified period established by the Administrator. Said period may be no less than 30 days from the date that the first written offer of a hearing is made to the manufacturer. To expedite proceedings, the Administrator may direct that the decision of the Presiding Officer (who may, but need not, be the Administrator) shall be the final EPA decision.

(b)(1) Upon appointment pursuant to paragraph (a) of this section, the Presiding Officer will establish a hearing file. The file shall consist of the following:

(i) The determination issued by the Administrator under § 89.126(d);

(ii) The request for a hearing and the supporting data submitted therewith;

(iii) All documents relating to the request for certification and all documents submitted therewith; and

(iv) Correspondence and other data material to the hearing.

(2) The hearing file will be available for inspection by the applicant at the office of the Presiding Officer.

(c) An applicant may appear in person or may be represented by counsel or by any other duly authorized representative.

(d)(1) The Presiding Officer, upon the request of any party or at his or her discretion, may arrange for a prehearing conference at a time and place he/she specifies. Such prehearing conference will consider the following:

(i) Simplification of the issues;

(ii) Stipulations, admissions of fact, and the introduction of documents;

(iii) Limitation of the number of expert witnesses;

(iv) Possibility of agreement disposing of any or all of the issues in dispute; and

(v) Such other matters as may aid in the disposition of the hearing, including such additional tests as may be agreed upon by the parties.

(2) The results of the conference shall be reduced to writing by the Presiding Officer and made part of the record.

(e)(1) Hearings shall be conducted by the Presiding Officer in an informal but orderly and expeditious manner. The parties may offer oral or written evidence, subject to the exclusion by the Presiding Officer of irrelevant, immaterial, and repetitious evidence.

(2) Witnesses will not be required to testify under oath. However, the Presiding Officer shall call to the attention of witnesses that their statements may be subject to the provisions of 18 U.S.C. 1001 which imposes penalties for knowingly making false statements or representations or using false documents in any matter within the jurisdiction of any department or agency of the United States.

(3) Any witness may be examined or cross-examined by the Presiding Officer, the parties, or their representatives.

(4) Hearings shall be reported verbatim. Copies of transcripts of proceedings may be purchased by the applicant from the reporter.

(5) All written statements, charts, tabulations, and similar data offered in evidence at the hearings shall, upon a showing satisfactory to the Presiding Officer of their authenticity, relevancy, and materiality, be received in evidence and shall constitute a part of the record.

(6) Oral argument may be permitted at the discretion of the Presiding Officer and shall be reported as part of the record unless otherwise ordered by the Presiding Officer.

(f)(1) The Presiding Officer shall make an initial decision which shall include written findings and conclusions and the reasons or basis regarding all the material issues of fact, law, or discretion presented on the record. The findings, conclusions, and written decision shall be provided to the parties and made a part of the record. The initial decision shall become the decision of the Administrator without further proceedings, unless there is an appeal to the Administrator or motion for review by the Administrator within 20 days of the date the initial decision was filed. If the Administrator has determined under paragraph (a) of this section that the decision of the Presiding Officer is final, there is no right of appeal to the Administrator.

(2) On appeal from or review of the initial decision, the Administrator shall have all the powers which he or she would have in making the initial

decision, including the discretion to require or allow briefs, oral argument, the taking of additional evidence, or the remanding to the Presiding Officer for additional proceedings. The decision by the Administrator may adopt the original decision or shall include written findings and conclusions and the reasons or basis therefor on all the material issues of fact, law, or discretion presented on the appeal or considered in the review.

[59 FR 31335, June 17, 1994. Redesignated at 63 FR 56995, Oct. 23, 1998]

§ 89.129 Right of entry.

(a) Any manufacturer who has applied for certification of a new engine or engine family subject to certification testing under this subpart shall admit or cause to be admitted to any of the following facilities during operating hours any EPA enforcement officer or EPA authorized representative on presentation of credentials.

(1) Any facility where any such certification testing or any procedures or activities connected with such certification testing are or were performed;

(2) Any facility where any new engine which is being, was, or is to be tested is present;

(3) Any facility where any construction process or assembly process used in the modification or buildup of such an engine into a certification engine is taking place or has taken place; and

(4) Any facility where any record or other document relating to any of the above is located.

(b) Upon admission to any facility referred to in paragraph (a)(1) of this section, any EPA enforcement officer or EPA authorized representative shall be allowed:

(1) To inspect and monitor any part or aspect of such procedures, activities, and testing facilities, including, but not limited to, monitoring engine preconditioning, emission tests and service accumulation, maintenance, and engine storage procedures, and to verify correlation or calibration of test equipment;

(2) To inspect and make copies of any such records, designs, or other documents; and

(3) To inspect and photograph any part or aspect of any such certification engine and any components to be used in the construction thereof.

(c) To allow the Administrator to determine whether production engines conform in all material respects to the design specifications applicable to those engines, as described in the application for certification for which a certificate of conformity has been issued, any manufacturer shall admit any EPA enforcement officer or EPA authorized representative on presentation of credentials to:

(1) Any facility where any document, design, or procedure relating to the translation of the design and construction of engines and emission-related components described in the application for certification or used for certification testing into production engines is located or carried on; and

(2) Any facility where any engines to be introduced into commerce are manufactured or assembled.

(d) On admission to any such facility referred to in paragraph (c) of this section, any EPA enforcement officer or EPA authorized representative shall be allowed:

(1) To inspect and monitor any aspects of such manufacture or assembly and other procedures;

(2) To inspect and make copies of any such records, documents or designs; and

(3) To inspect and photograph any part or aspect of any such new engines and any component used in the assembly thereof that are reasonably related to the purpose of his or her entry.

(e) Any EPA enforcement officer or EPA authorized representative shall be furnished by those in charge of a facility being inspected with such reasonable assistance as he or she may request to help the enforcement officer or authorized representative discharge any function listed in this paragraph. Each applicant for or recipient of certification is required to cause those in charge of a facility operated for its benefit to furnish such reasonable assistance without charge to EPA whether or not the applicant controls the facility.

(1) Reasonable assistance includes, but is not limited to, clerical, copying, interpretation and translation services;

the making available on request of personnel of the facility being inspected during their working hours to inform the EPA enforcement officer or EPA authorized representative of how the facility operates and to answer the officer's questions; and the performance on request of emission tests on any engine which is being, has been, or will be used for certification testing. Such tests shall be nondestructive, but may require appropriate service accumulation.

(2) A manufacturer may be compelled to cause any employee at a facility being inspected to appear before an EPA enforcement officer or EPA authorized representative. The request for the employee's appearance shall be in writing, signed by the Assistant Administrator for Air and Radiation, and served on the manufacturer. Any employee who has been instructed by the manufacturer to appear will be entitled to be accompanied, represented, and advised by counsel.

(f) The duty to admit or cause to be admitted any EPA enforcement officer or EPA authorized representative applies whether or not the applicant owns or controls the facility in question and applies both to domestic and to foreign manufacturers and facilities. EPA will not attempt to make any inspections which it has been informed that local law forbids. However, if local law makes it impossible to do what is necessary to ensure the accuracy of data generated at a facility, no informed judgment that an engine is certifiable or is covered by a certificate can properly be based on those data. It is the responsibility of the manufacturer to locate its testing and manufacturing facilities in jurisdictions where this situation will not arise.

(g) Any entry without 24 hours prior written or oral notification to the affected manufacturer shall be authorized in writing by the Assistant Administrator for Enforcement.

[59 FR 31335, June 17, 1994. Redesignated at 63 FR 56995, Oct. 23, 1998]

§ 89.130 Rebuild practices.

(a) The provisions of this section are applicable to engines subject to the standards prescribed in § 89.112 and are applicable to the process of engine rebuilding (or rebuilding a portion of an engine or engine system). This section does not apply to Tier 1 engines rated at or above 37 kW. The process of engine rebuilding generally includes disassembly, replacement of multiple parts due to wear, and reassembly, and also may include the removal of the engine from the vehicle and other acts associated with rebuilding an engine.

(b) When rebuilding an engine, portions of an engine, or an engine system, there must be a reasonable technical basis for knowing that the resultant engine is equivalent, from an emissions standpoint, to a certified configuration (i.e., tolerances, calibrations, specifications), and the model year(s) of the resulting engine configuration must be identified. A reasonable basis would exist if:

(1) Parts installed, whether the parts are new, used, or rebuilt, are such that a person familiar with the design and function of motor vehicle engines would reasonably believe that the parts perform the same function with respect to emission control as the original parts; and

(2) Any parameter adjustment or design element change is made only:

(i) In accordance with the original engine manufacturer's instructions; or

(ii) Where data or other reasonable technical basis exists that such parameter adjustment or design element change, when performed on the engine or similar engines, is not expected to adversely affect in-use emissions.

(c) When an engine is being rebuilt and remains installed or is reinstalled in the same equipment, it must be rebuilt to a configuration of the same or later model year as the original engine. When an engine is being replaced, the replacement engine must be an engine of (or rebuilt to) a certified configuration that is equivalent, from an emissions standpoint, to the engine being replaced.

(d) At time of rebuild, emission-related codes or signals from on-board monitoring systems may not be erased or reset without diagnosing and responding appropriately to the diagnostic codes, regardless of whether the

systems are installed to satisfy requirements in § 89.109 or for other reasons and regardless of form or interface. Diagnostic systems must be free of all such codes when the rebuilt engine is returned to service. Such signals may not be rendered inoperative during the rebuilding process.

(e) When conducting a rebuild without removing the engine from the equipment, or during the installation of a rebuilt engine, all critical emission-related components listed in 40 CFR part 86, subpart B, not otherwise addressed by paragraphs (b) through (d) of this section must be checked and cleaned, adjusted, repaired, or replaced as necessary, following manufacturer recommended practices.

(f) Records shall be kept by parties conducting activities included in paragraphs (b) through (e) of this section. The records shall include at minimum the hours of operation at time of rebuild, a listing of work performed on the engine, and emission-related control components including a listing of parts and components used, engine parameter adjustments, emission-related codes or signals responded to and reset, and work performed under paragraph (e) of this section.

(1) Parties may keep records in whatever format or system they choose as long as the records are understandable to an EPA enforcement officer or can be otherwise provided to an EPA enforcement officer in an understandable format when requested.

(2) Parties are not required to keep records of information that is not reasonably available through normal business practices including information on activities not conducted by themselves or information that they cannot reasonably access.

(3) Parties may keep records of their rebuilding practices for an engine family rather than on each individual engine rebuilt in cases where those rebuild practices are followed routinely.

(4) Records must be kept for a minimum of two years after the engine is rebuilt.

[63 FR 57005, Oct. 23, 1998]

Subpart C—Averaging, Banking, and Trading Provisions

§ 89.201 Applicability.

Nonroad compression-ignition engines subject to the provisions of subpart A of this part are eligible to participate in the averaging, banking, and trading program described in this subpart.

[59 FR 31335, June 17, 1994. Redesignated at 63 FR 56995, Oct. 23, 1998]

§ 89.202 Definitions.

The definitions in subpart A of this part apply to this subpart. The following definitions also apply to this subpart:

Averaging for nonroad engines means the exchange of emission credits among engine families within a given manufacturer's product line.

Banking means the retention of nonroad engine emission credits by the manufacturer generating the emission credits for use in future model year averaging or trading as permitted by these regulations.

Emission credits represent the amount of emission reduction or exceedance, by a nonroad engine family, below or above the emission standard, respectively. Emission reductions below the standard are considered as ''positive credits,'' while emission exceedances above the standard are considered as ''negative credits.'' In addition, ''projected credits'' refer to emission credits based on the projected applicable production/sales volume of the engine family. ''Reserved credits'' are emission credits generated within a model year waiting to be reported to EPA at the end of the model year. ''Actual credits'' refer to emission credits based on actual applicable production/sales volume as contained in the end-of-year reports submitted to EPA. Some or all of these credits may be revoked if EPA review of the end-of-year reports or any subsequent audit action(s) uncovers problems or errors.

Trading means the exchange of nonroad engine emission credits between manufacturers.

[59 FR 31335, June 17, 1994. Redesignated at 63 FR 56995, Oct. 23, 1998]

§ 89.203 General provisions.

(a) The averaging, banking, and trading programs for NO_X, NMHC+NO_X, and PM emissions from eligible nonroad engines are described in this subpart. Participation in these programs is voluntary.

(b) *Requirements for Tier 1 engines rated at or above 37 kW.* (1) A nonroad engine family is eligible to participate in the averaging, banking, and trading program for NO_X emissions and the banking and trading program for PM emissions if it is subject to regulation under subpart B of this part with certain exceptions specified in paragraph (b)(2) of this section. No averaging, banking, and trading program is available for meeting the Tier 1 HC, CO, or smoke emission standards specified in subpart B of this part. No averaging program is available for meeting the Tier 1 PM emission standards specified in subpart B of this part.

(2) Nonroad engines may not participate in the averaging, banking, and trading programs if they are exported or are sold as Blue Sky Series engines as described in § 89.112(f). Nonroad engines certified on a special test procedure under § 89.114(a), may not participate in the averaging, banking and trading programs unless the manufacturer has requested that the engines be included in the averaging, banking, and trading programs at the time the request for the special test procedure is made and has been granted approval by the Administrator for inclusion in the averaging, banking, and trading programs.

(3) A manufacturer may certify one or more nonroad engine families at NO_X family emission limits (FELs) above or below the Tier 1 NO_X emission standard, provided the summation of the manufacturer's projected balance of all NO_X credit transactions in a given model year is greater than or equal to zero, as determined under § 89.207(a). A manufacturer may certify one or more nonroad engine families at PM FELs below the Tier 2 PM emission standard that will be applicable to those engine families.

(i) FELs for NO_X may not exceed the Tier 1 upper limit specified in § 89.112(d).

(ii) An engine family certified to an FEL is subject to all provisions specified in this part, except that the applicable FEL replaces the emission standard for the family participating in the averaging, banking, and trading program.

(iii) A manufacturer of an engine family with a NO_X FEL exceeding the Tier 1 NO_X emission standard must obtain NO_X emission credits sufficient to address the associated credit shortfall via averaging, banking, or trading.

(iv) An engine family with a NO_X FEL below the applicable Tier 1 standard may generate emission credits for averaging, banking, trading, or a combination thereof. An engine family with a PM FEL below the Tier 2 standard that will be applicable to that engine family may generate emission credits for banking, trading, or a combination thereof. Emission credits may not be used to offset an engine family's emissions that exceed its applicable FEL. Credits may not be used to remedy nonconformity determined by a Selective Enforcement Audit (SEA) or by recall (in-use) testing. However, in the case of an SEA failure, credits may be used to allow subsequent production of engines for the family in question if the manufacturer elects to recertify to a higher FEL.

(4) NO_X credits generated in a given model year may be used to address credit shortfalls with other engines during that model year or in any subsequent model year except as noted under paragraph (b)(5)(ii) of this section. PM credits may be used to address credit shortfalls with Tier 2 and later engines greater than or equal to 37 kW and Tier 1 and later engines less than 37 kW and greater than or equal to 19 kW. Credits generated in one model year may not be used for prior model years.

(5) The following provisions apply to the use of Tier 1 NO_X credits for showing compliance with the Tier 2 or Tier 3 NMHC+NO_X standards.

(i) A manufacturer may use NO_X credits from engines subject to the Tier 1 NO_X standard to address NMHC+NO_X credit shortfalls with engines in the same averaging set subject to Tier 1 NMHC+NO_X or Tier 2 NMHC+NO_X emission standards.

(ii) A manufacturer may not use NO_X credits from engines subject to the Tier 1 standards to address NMHC+NO_X credit shortfalls with engines subject to the Tier 3 NMHC+NO_X emission standards.

(c) *Requirements for Tier 2 and later engines rated at or above 37 kW and Tier 1 and later engines rated under 37 kW.* (1) A nonroad engine family is eligible to participate in the averaging, banking, and trading programs for NMHC+NO_X emissions and PM emissions if it is subject to regulation under subpart B of this part with certain exceptions specified in paragraph (c)(2) of this section. No averaging, banking, and trading program is available for meeting the CO or smoke emission standards specified in subpart B of this part.

(2) Nonroad engines may not participate in the averaging, banking, and trading programs if they are exported or are sold as Blue Sky Series engines as described in § 89.112(f). Nonroad engines certified on a special test procedure under § 89.114(a), may not participate in the averaging, banking and trading programs unless the manufacturer has requested that the engines be included in the averaging, banking, and trading programs at the time the request for the special test procedure is made and has been granted approval by the Administrator for inclusion in the averaging, banking, and trading programs.

(3)(i) A manufacturer may certify one or more nonroad engine families at FELs above or below the applicable NMHC+NO_X emission standard and PM emission standard, provided the summation of the manufacturer's projected balance of all NMHC+NO_X credit transactions and the summation of the manufacturer's projected balance of all PM credit transactions in a given model year in a given averaging set is greater than or equal to zero, as determined under § 89.207(b).

(A) FELs for NMHC+NO_X and FELs for PM may not exceed the upper limits specified in § 89.112(d).

(B) An engine family certified to an FEL is subject to all provisions specified in this part, except that the applicable FEL replaces the emission standard for the family participating in the averaging, banking, and trading program.

(C) A manufacturer of an engine family with an FEL exceeding the applicable emission standard must obtain emission credits sufficient to address the associated credit shortfall via averaging, banking, or trading, within the restrictions described in § 89.204(c) and § 89.206(b)(4).

(D) An engine family with an FEL below the applicable standard may generate emission credits for averaging, banking, trading, or a combination thereof. Emission credits may not be used to offset an engine family's emissions that exceed its applicable FEL. Credits may not be used to remedy nonconformity determined by a Selective Enforcement Audit (SEA) or by recall (in-use) testing. However, in the case of an SEA failure, credits may be used to allow subsequent production of engines for the family in question if the manufacturer elects to recertify to a higher FEL.

(ii)(A) In lieu of generating credits under paragraph (c)(3)(i) of this section, a manufacturer may certify one or more nonroad engine families rated under 37 kW at family emission limits (FELs) above or below the applicable NMHC+NO_X emission standard and PM emission standard. The summation of the manufacturer's projected balance of all NMHC+NO_X credit transactions and the summation of the manufacturer's projected balance of all PM credit transactions in a given model year, as determined under § 89.207(b), are each allowed to be less than zero. Separate calculations shall be required for the following two categories of engines: engines rated under 19 kW and engines rated at or above 19 kW and under 37 kW.

(B) For each calendar year a negative credit balance exists as of December 31, a penalty equal to ten percent of the negative credit balance as of December 31 of the calendar year shall be added to the negative credit balance. The resulting negative credit balance shall be carried into the next calendar year.

(C) For engines rated under 19 kW, a manufacturer will be allowed to carry over a negative credit balance until December 31, 2003. For engines rated at or above 19 kW and under 37 kW, a

manufacturer will be allowed to carry over a negative credit balance until December 31, 2002. As of these dates, the summation of the manufacturer's projected balance of all NMHC+NO_X credit transactions and the summation of the manufacturer's projected balance of all PM credit transactions must each be greater than or equal to zero.

(D) FELs for NMHC+NO_X and FELs for PM may not exceed the upper limits specified in § 89.112(d).

(E) An engine family certified to an FEL is subject to all provisions specified in this part, except that the applicable NMHC+NO_X FEL or PM FEL replaces the NMHC+NO_X emission standard or PM emission standard for the family participating in the averaging and banking program.

(F) A manufacturer of an engine family with an FEL exceeding the applicable emission standard must obtain emission credits sufficient to address the associated credit shortfall via averaging or banking. The exchange of emission credits generated under this program with other nonroad engine manufacturers in trading is not allowed.

(G) An engine family with an FEL below the applicable standard may generate emission credits for averaging, banking, or a combination thereof. Emission credits may not be used to offset an engine family's emissions that exceed its applicable FEL. Credits may not be used to remedy nonconformity determined by a Selective Enforcement Audit (SEA) or by recall (in-use) testing. However, in the case of an SEA failure, credits may be used to allow subsequent production of engines for the family in question if the manufacturer elects to recertify to a higher FEL.

(4)(i) Except as noted in paragraphs (c)(4)(ii), (c)(4)(iii), and (c)(4)(iv) of this section, credits generated in a given model year may be used during that model year or used in any subsequent model year. Except as allowed under paragraph (c)(3)(ii) of this section, credits generated in one model year may not be used for prior model years.

(ii) Credits generated from engines rated under 19 kW prior to the implementation date of the applicable Tier 2 standards, shall expire on December 31, 2007.

(iii) Credits generated from engines rated under 19 kW under the provisions of paragraph (c)(3)(ii) shall expire on December 31, 2003.

(iv) Credits generated from engines rated at or above 19 kW and under 37 kW under the provisions of paragraph (c)(3)(ii) of this section shall expire on December 31, 2002.

(5) Except as provided in paragraph (b)(3) of this section, engine families may not generate credits for one pollutant while also using credits for another pollutant in the same model year.

(d) Manufacturers must demonstrate compliance under the averaging, banking, and trading programs for a particular model year within 270 days of the end of the model year. Except as allowed under paragraph (c)(3)(ii) of this section, manufacturers that have certified engine families to FELs above the applicable emission standards and do not have sufficient emission credits to offset the difference between the emission standards and the FEL for such engine families will be in violation of the conditions of the certificate of conformity for such engine families. The certificates of conformity may be voided ab initio under § 89.126(c) for those engine families.

[63 FR 57006, Oct. 23, 1998]

§ 89.204 Averaging.

(a) *Requirements for Tier 1 engines rated at or above 37 kW.* A manufacturer may use averaging to offset an emission exceedance of a nonroad engine family caused by a NO_X FEL above the applicable emission standard. NO_X credits used in averaging may be obtained from credits generated by another engine family in the same model year, credits banked in a previous model year, or credits obtained through trading.

(b) *Requirements for Tier 2 and later engines rated at or above 37 kW and Tier 1 and later engines rated under 37 kW.* A manufacturer may use averaging to offset an emission exceedance of a nonroad engine family caused by an NMHC+;NO_X FEL or a PM FEL above the applicable emission standard. Credits used in averaging may be obtained

from credits generated by another engine family in the same model year, credits banked in previous model years that have not expired, or credits obtained through trading. The use of credits shall be within the restrictions described in paragraph (c) of this section, § 89.206(b)(4) and § 89.203(b)(5)(ii).

(c) *Averaging sets for emission credits.* The averaging and trading of NO_X emission credits, NMHC + NO_X emission credits, and PM emissions credits will only be allowed between engine families in the same averaging set. The averaging sets for the averaging and trading of NO_X emission credits, NMHC + NO_X emission credits, and PM emission credits for nonroad engines are defined as follows:

(1) Eligible engines rated at or above 19 kW, other than marine diesel engines, constitute an averaging set.

(2) Eligible engines rated under 19 kW, other than marine diesel engines, constitute an averaging set.

(3) Marine diesel engines rated at or above 19 kW constitute an averaging set. Emission credits generated from marine diesel engines rated at or above 19 kW may be used to address credit shortfalls for eligible engines rated at or above 19 kW other than marine diesel engines.

(4) Marine diesel engines rated under 19 kW constitute an averaging set. Emission credits generated from marine diesel engines rated under 19 kW may be used to address credit shortfalls for eligible engines rated under 19 kW other than marine diesel engines.

[63 FR 57007, Oct. 23, 1998]

§ 89.205 Banking.

(a) *Requirements for Tier 1 engines rated at or above 37 kW.* (1) A manufacturer of a nonroad engine family with a NO_X FEL below the applicable standard for a given model year may bank credits in that model year for use in averaging and trading in any subsequent model year.

(2) A manufacturer of a nonroad engine family may bank NO_X credits up to one calendar year prior to the effective date of mandatory certification. Such engines must meet the requirements of subparts A, B, D, E, F, G, H, I, J, and K of this part.

(3)(i) A manufacturer of a nonroad engine family may bank PM credits from Tier 1 engines under the provisions specified in § 89.207(b) for use in averaging and trading in the Tier 2 or later timeframe.

(ii) Such engine families are subject to all provisions specified in subparts A, B, D, E, F, G, H, I, J, and K of this part, except that the applicable PM FEL replaces the PM emission standard for the family participating in the banking and trading program.

(b) *Requirements for Tier 2 and later engines rated at or above 37 kW and Tier 1 and later engines rated under 37 kW.* (1) A manufacturer of a nonroad engine family with an NMHC + NO_X FEL or a PM FEL below the applicable standard for a given model year may bank credits in that model year for use in averaging and trading in any following model year.

(2) For engine rated under 37 kW, a manufacturer of a nonroad engine family may bank credits prior to the effective date of mandatory certification. Such engines must meet the requirements of subparts A, B, D, E, F, G, H, I, J, and K of this part.

(c) A manufacturer may bank actual credits only after the end of the model year and after EPA has reviewed the manufacturer's end-of-year reports. During the model year and before submittal of the end-of-year report, credits originally designated in the certification process for banking will be considered reserved and may be redesignated for trading or averaging in the end-of-year report and final report.

(d) Credits declared for banking from the previous model year that have not been reviewed by EPA may be used in averaging or trading transactions. However, such credits may be revoked at a later time following EPA review of the end-of-year report or any subsequent audit actions.

[63 FR 57008, Oct. 23, 1998]

§ 89.206 Trading.

(a) *Requirements for Tier 1 engines rated at or above 37 kW.* (1) A nonroad engine manufacturer may exchange emission credits with other nonroad engine manufacturers within the same averaging set in trading.

(2) Credits for trading can be obtained from credits banked in a previous model year or credits generated during the model year of the trading transaction.

(3) Traded credits can be used for averaging, banking, or further trading transactions within the restrictions described in § 89.204(c).

(b) *Requirements for Tier 2 and later engines rated at or above 37 kW and Tier 1 and later engines rated under 37 kW.* (1) A nonroad engine manufacturer may exchange emission credits with other nonroad engine manufacturers within the same averaging set in trading.

(2) Credits for trading can be obtained from credits banked in previous model years that have not expired or credits generated during the model year of the trading transaction.

(3) Traded credits can be used for averaging, banking, or further trading transactions within the restrictions described in § 89.204(c) and paragraph (b)(4) of this section.

(4) Emission credits generated from engines rated at or above 19 kW utilizing indirect fuel injection may not be traded to other manufacturers.

(c) In the event of a negative credit balance resulting from a transaction, both the buyer and the seller are liable, except in cases deemed involving fraud. Certificates of all engine families participating in a negative trade may be voided ab initio under § 89.126(c).

[63 FR 57008, Oct. 23, 1998]

§ 89.207 Credit calculation.

(a) *Requirements for calculating NO_X credits from Tier 1 engines rated at or above 37 kW.* (1) For each participating engine family, emission credits (positive or negative) are to be calculated according to one of the following equations and rounded, in accordance with ASTM E29–93a, to the nearest one-hundredth of a megagram (Mg). This ASTM procedure has been incorporated by reference (see § 89.6). Consistent units are to be used throughout the equation.

(i) For determining credit availability from all engine families generating credits: Emission credits = (Std − FEL) × (Volume) × (AvgPR) × (UL) × (Adjustment) × (10^{-6})

(ii) For determining credit usage for all engine families requiring credits to offset emissions in excess of the standard:

Emission credits = (Std − FEL) × (Volume) × (AvgPR) × (UL) × (10^{-6})

Where:

Std = the applicable Tier 1 NO_X nonroad engine emission standard, in grams per kilowatt-hour.

FEL = the NO_X family emission limit for the engine family in grams per kilowatt-hour.

Volume = the number of nonroad engines eligible to participate in the averaging, banking, and trading program within the given engine family during the model year. Engines sold to equipment or vehicle manufacturers under the provisions of § 89.102(g) shall not be included in this number. Quarterly production projections are used for initial certification. Actual applicable production/sales volume is used for end-of-year compliance determination.

AvgPR = the average power rating of all of the configurations within an engine family, calculated on a sales-weighted basis, in kilowatts.

UL = the useful life for the engine family, in hours.

Adjustment = a one-time adjustment, as specified in paragraph (a)(2) of this section, to be applied to Tier 1 NO_X credits to be banked or traded for determining compliance with the Tier 1 NO_X standards or Tier 2 NO_X+NMHC standards specified in subpart B of this part. Banked credits traded in a subsequent model year will not be subject to an additional adjustment. Banked credits used in a subsequent model year's averaging program will not have the adjustment restored.

(2) If an engine family is certified to a NO_X FEL of 8.0 g/kW-hr or less, an Adjustment value of 1.0 shall be used in the credit generation calculation described in paragraph (a)(1)(i) of this section. If an engine family is certified to a NO_X FEL above 8.0 g/kW-hr, an Adjustment value of 0.65 shall be used in the credit generation calculation described in paragraph (a)(1)(i) of this section. If the credits are to be used by the credit-generating manufacturer for averaging purposes in the same model year in which they are generated, an Adjustment value of 1.0 shall be used for all engines regardless of the level of the NO_X FEL. If the credits are to be banked by the credit-generating manufacturer and used in a subsequent model year for another Tier 1 engine family, an Adjustment value of 1.0

shall be used for all engines regardless of the level of the NO_X FEL.

(b) *Requirements for calculating NMHC + NO_X Credits from Tier 2 and later engines rated at or above 37 kW and Tier 1 and later engines rated under 37 kW and PM credits from all engines.* (1) For each participating engine family, NO_X + NMHC emission credits and PM emission credits (positive or negative) are to be calculated according to one of the following equations and rounded, in accordance with ASTM E29–93a, to the nearest one-hundredth of a megagram (Mg). This procedure has been incorporated by reference (see § 89.6). Consistent units are to be used throughout the equation.

(i) For determining credit availability from all engine families generating credits:

$$\text{Emission credits} = (\text{Std-FEL}) \times (\text{Volume}) \times (\text{AvgPR}) \times (\text{UL}) \times (10^{-6})$$

(ii) For determining credit usage for all engine families requiring credits to offset emissions in excess of the standard:

$$\text{Emission credits} = (\text{Std-FEL}) \times (\text{Volume}) \times (\text{AvgPR}) \times (\text{UL}) \times (10^{-6})$$

Where:

Std = the current and applicable nonroad engine emission standard, in grams per kilowatt-hour, except for PM calculations where it is the applicable nonroad engine Tier 2 PM emission standard, and except for engines rated under 19 kW where it is the applicable nonroad engine Tier 2 emission standard, in grams per kilowatt-hour. (Engines rated under 19 kW participating in the averaging and banking program provisions of § 89.203(c)(3)(ii) shall use the Tier 1 standard for credit calculations.)

FEL = the family emission limit for the engine family in grams per kilowatt-hour.

Volume = the number of nonroad engines eligible to participate in the averaging, banking, and trading program within the given engine family during the model year. Engines sold to equipment or vehicle manufacturers under the provisions of § 89.102(g) shall not be included in this number. Quarterly production projections are used for initial certification. Actual applicable production/sales volume is used for end-of-year compliance determination.

AvgPR = the average power rating of all of the configurations within an engine family, calculated on a sales-weighted basis, in kilowatts.

UL = the useful life for the given engine family, in hours.

[63 FR 57008, Oct. 23, 1998]

§ 89.208 Labeling.

For all nonroad engines included in the averaging, banking, and trading programs, the family emission limits to which the engine is certified must be included on the label required in § 89.110.

[63 FR 57009, Oct. 23, 1998]

§ 89.209 Certification.

(a) In the application for certification a manufacturer must:

(1) Declare its intent to include specific engine families in the averaging, banking, and trading programs.

(2) Submit a statement that the engines for which certification is requested will not, to the best of the manufacturer's belief, cause the manufacturer to have a negative credit balance when all credits are calculated for all the manufacturer's engine families participating in the averaging, banking, and trading programs, except as allowed under § 89.203(c)(3)(ii).

(3) Declare the applicable FELs for each engine family participating in averaging, banking, and trading.

(i) The FELs must be to the same number of significant digits as the emission standard for the applicable pollutant.

(ii) In no case may the FEL exceed the upper limits prescribed in § 89.112(d).

(4) Indicate the projected number of credits generated/needed for this family; the projected applicable production/sales volume, by quarter; and the values required to calculate credits as given in § 89.207.

(5) Submit calculations in accordance with § 89.207 of projected emission credits (positive or negative) based on quarterly production projections for each participating family.

(6)(i) If the engine family is projected to have negative emission credits, state specifically the source (manufacturer/engine family or reserved) of the credits necessary to offset the credit deficit according to quarterly projected production, or, if the engine family is to be included in the provisions of § 89.203(c)(3)(ii), state that the engine

family will be subject to those provisions.

(ii) If the engine family is projected to generate credits, state specifically (manufacturer/engine family or reserved) where the quarterly projected credits will be applied.

(b) All certificates issued are conditional upon manufacturer compliance with the provisions of this subpart both during and after the model year of production.

(c) Failure to comply with all provisions of this subpart will be considered to be a failure to satisfy the conditions upon which the certificate was issued, and the certificate may be deemed void ab initio.

(d) The manufacturer bears the burden of establishing to the satisfaction of the Administrator that the conditions upon which the certificate was issued were satisfied or waived.

(e) Projected credits based on information supplied in the certification application may be used to obtain a certificate of conformity. However, any such credits may be revoked based on review of end-of-year reports, follow-up audits, and any other verification steps deemed appropriate by the Administrator.

[59 FR 31335, June 17, 1994. Redesignated and amended at 63 FR 56995, 57009, Oct. 23, 1998]

§ 89.210 Maintenance of records.

(a) The manufacturer of any nonroad engine that is certified under the averaging, banking, and trading program must establish, maintain, and retain the following adequately organized and indexed records for each such engine produced:

(1) EPA engine family;

(2) Engine identification number;

(3) Engine model year and build date,

(4) Power rating;

(5) Purchaser and destination; and

(6) Assembly plant.

(b) The manufacturer of any nonroad engine family that is certified under the averaging, banking, and trading programs must establish, maintain, and retain the following adequately organized and indexed records for each such family:

(1) EPA engine family;

(2) Family emission limits (FEL);

(3) Power rating for each configuration tested;

(4) Projected applicable production/sales volume for the model year; and

(5) Actual applicable production/sales volume for the model year.

(c) Any manufacturer producing an engine family participating in trading reserved credits must maintain the following records on a quarterly basis for each engine family in the trading program:

(1) The engine family;

(2) The actual quarterly and cumulative applicable production/sales volume;

(3) The values required to calculate credits as given in § 89.207;

(4) The resulting type and number of credits generated/required;

(5) How and where credit surpluses are dispersed; and

(6) How and through what means credit deficits are met.

(d) The manufacturer must retain all records required to be maintained under this section for a period of eight years from the due date for the end-of-model-year report. Records may be retained as hard copy or reduced to microfilm, ADP diskettes, and so forth, depending on the manufacturer's record retention procedure; provided, that in every case all information contained in the hard copy is retained.

(e) Nothing in this section limits the Administrator's discretion in requiring the manufacturer to retain additional records or submit information not specifically required by this section.

(f) Pursuant to a request made by the Administrator, the manufacturer must submit to the Administrator the information that the manufacturer is required to retain.

(g) EPA may void ab initio under § 89.126(c) a certificate of conformity for an engine family for which the manufacturer fails to retain the records required in this section or to provide such information to the Administrator upon request.

[59 FR 31335, June 17, 1994. Redesignated and amended at 63 FR 56995, 57009, Oct. 23, 1998]

§ 89.211 End-of-year and final reports.

(a) End-of-year and final reports must indicate the engine family, the

actual applicable production/sales volume, the values required to calculate credits as given in § 89.207, and the number of credits generated/required. Manufacturers must also submit how and where credit surpluses were dispersed (or are to be banked) and/or how and through what means credit deficits were met. Copies of contracts related to credit trading must be included or supplied by the broker, if applicable. The report shall include a calculation of credit balances to show that the summation of the manufacturer's use of credits results in a credit balance equal to or greater than zero, except as allowed under § 89.203(c)(3)(ii). Manufacturers participating under the program described in § 89.203(c)(3)(ii) shall include the NMHC + NO_X credit balance and the PM credit balance as of December 31 of that calendar year.

(b) The applicable production/sales volume for end-of-year and final reports must be based on the location of the point of first retail sale (for example, retail customer, dealer, secondary manufacturer) also called the final product purchase location.

(c)(1) End-of-year reports must be submitted within 90 days of the end of the model year to: Director, Engine Programs and Compliance Division (6405-J), U.S. Environmental Protection Agency, 401 M St., SW., Washington, DC 20460.

(2) Final reports must be submitted within 270 days of the end of the model year to: Director, Engine Programs and Compliance Division (6405-J), U.S. Environmental Protection Agency, 401 M St., SW., Washington, DC 20460.

(d) Failure by a manufacturer participating in the averaging, banking, or trading program to submit any end-of-year or final reports in the specified time for all engines is a violation of sections 203(a)(1) and 213 of the Clean Air Act for each engine.

(e) A manufacturer generating credits for deposit only who fails to submit end-of-year reports in the applicable specified time period (90 days after the end of the model year) may not use the credits until such reports are received and reviewed by EPA. Use of projected credits pending EPA review is not permitted in these circumstances.

(f) Errors discovered by EPA or the manufacturer in the end-of-year report, including errors in credit calculation, may be corrected in the final report up to 270 days from the end of the model year.

(g) If EPA or the manufacturer determines that a reporting error occurred on an end-of-year or final report previously submitted to EPA under this section, the manufacturer's credits and credit calculations will be recalculated. Erroneous positive credits will be void except as provided in paragraph (h) of this section. Erroneous negative credit balances may be adjusted by EPA.

(h) If within 270 days of the end of the model year, EPA review determines a reporting error in the manufacturer's favor (that is, resulting in an increased credit balance) or if the manufacturer discovers such an error within 270 days of the end of the model year, the credits shall be restored for use by the manufacturer.

[59 FR 31335, June 17, 1994. Redesignated and amended at 63 FR 56995, 57009, Oct. 23, 1998]

§ 89.212 Notice of opportunity for hearing.

Any voiding of the certificate under §§ 89.203(d), 89.206(c), 89.209(c) or 89.210(g) will be made only after the manufacturer concerned has been offered an opportunity for a hearing conducted in accordance with §§ 89.512 and 89.513 and, if a manufacturer requests such a hearing, will be made only after an initial decision by the Presiding Officer.

[63 FR 57010, Oct. 23, 1998]

Subpart D—Emission Test Equipment Provisions

§ 89.301 Scope; applicability.

(a) This subpart describes the equipment required in order to perform exhaust emission tests on new nonroad compression-ignition engines subject to the provisions of subpart B of part 89.

(b) Exhaust gases, either raw or dilute, are sampled while the test engine is operated using an 8-mode test cycle on an engine dynamometer. The exhaust gases receive specific component

analysis determining concentration of pollutant, exhaust volume, the fuel flow, and the power output during each mode. Emission is reported as grams per kilowatt hour (g/kw-hr). See subpart E of this part for a complete description of the test procedure.

(c) General equipment and calibration requirements are given in § 89.304 through 89.324. Sections 89.325 through 89.331 set forth general test specifications.

(d) Additional information about system design, calibration methodologies, and so forth, for raw gas sampling can be found in part 86, subpart D of this chapter. Examples for system design, calibration methodologies, and so forth, for dilute exhaust gas sampling can be found in part 86, subpart N of this chapter.

[59 FR 31335, June 17, 1994. Redesignated at 63 FR 56995, Oct. 23, 1998]

§ 89.302 Definitions.

The definitions in subpart A of this part apply to this subpart. For terms not defined in this part, the definitions in 40 CFR part 86, subparts A, D, I, and N, apply to this subpart.

[63 FR 57010, Oct. 23, 1998]

§ 89.303 Symbols/abbreviations.

(a) The abbreviations in § 86.094–3 or part 89.3 of this chapter apply to this subpart.

(b) The abbreviations in Table 1 in appendix A of this subpart apply to this subpart. Some abbreviations from § 89.3 have been included for the convenience of the reader.

(c) The symbols in Table 2 in appendix A of this subpart apply to this subpart.

[59 FR 31335, June 17, 1994. Redesignated at 63 FR 56995, Oct. 23, 1998]

§ 89.304 Equipment required for gaseous emissions; overview.

(a) All engines subject to this subpart are tested for exhaust emissions. Engines are operated on dynamometers meeting the specification given in § 89.306.

(b) The exhaust is tested for gaseous emissions using a raw gas sampling system as described in § 89.412 or a constant volume sampling (CVS) system as described in § 89.419. Both systems require analyzers (see paragraph (c) of this section) specific to the pollutant being measured.

(c) Analyzers used are a non-dispersive infrared (NDIR) absorption type for carbon monoxide and carbon dioxide analysis; a heated flame ionization (HFID) type for hydrocarbon analysis; and a chemiluminescent detector (CLD) or heated chemiluminescent detector (HCLD) for oxides of nitrogen analysis. Sections 89.309 through 89.324 set forth a full description of analyzer requirements and specifications.

[59 FR 31335, June 17, 1994. Redesignated and amended at 63 FR 56995, 57010, Oct. 23, 1998]

§ 89.305 Equipment measurement accuracy/calibration frequency.

The accuracy of measurements must be such that the maximum tolerances shown in Table 3 in appendix A of this subpart are not exceeded. Calibrate all equipment and analyzers according to the frequencies shown in Table 3 in appendix A of this subpart.

[59 FR 31335, June 17, 1994. Redesignated at 63 FR 56995, Oct. 23, 1998]

§ 89.306 Dynamometer specifications and calibration weights.

(a) *Dynamometer specifications.* The dynamometer test stand and other instruments for measurement of power output must meet the accuracy and calibration frequency requirements shown in Table 3 in appendix A of this subpart. The dynamometer must be capable of performing the test cycle described in § 89.410.

(b) *Dynamometer calibration weights.* A minimum of six calibration weights for each range used are required. The weights must be spaced to reflect good engineering judgement such that they cover the range of weights required and must be traceable to within 0.5 percent of NIST weights. Laboratories located in foreign countries may certify calibration weights to local government bureau standards.

[59 FR 31335, June 17, 1994. Redesignated at 63 FR 56995, Oct. 23, 1998]

§ 89.307 Dynamometer calibration.

(a) If necessary, follow the dynamometer manufacturer's instructions for

initial start-up and basic operating adjustments.

(b) Check the dynamometer torque measurement for each range used by the following method:

(1) Warm up the dynamometer following the dynamometer manufacturer's specifications.

(2) Determine the dynamometer calibration moment arm (a distance/weight measurement). Dynamometer manufacturer's data, actual measurement, or the value recorded from the previous calibration used for this subpart may be used.

(3) When calibrating the engine flywheel torque transducer, any lever arm used to convert a weight or a force through a distance into a torque must be in a horizontal position (±5 degrees).

(4) Calculate the indicated torque (IT) for each calibration weight to be used by:

IT = calibration weight (N) × calibration moment arm (m)

(5) Attach each calibration weight specified in § 89.306 to the moment arm at the calibration distance determined in paragraph (b)(2) of this section. Record the power measurement equipment response (N – m) to each weight.

(6) For each calibration weight, compare the torque value measured in paragraph (b)(5) of this section to the calculated torque determined in paragraph (b)(4) of this section.

(7) The measured torque must be within either 2 percent of point or 1 percent of the engine maximum torque of the calculated torque.

(8) If the measured torque is not within the above requirements, adjust or repair the system. Repeat steps in paragraphs (b)(1) through (b)(6) of this section with the adjusted or repaired system.

(c) Optional. A master load-cell or transfer standard may be used to verify the torque measurement system.

(1) The master load-cell and read out system must be calibrated with weights at each test weight specified in § 89.306. The calibration weights must be traceable to within 0.1 percent of applicable national standards.

(2) Warm up the dynamometer following the equipment manufacturer's specifications.

(3) Attach the master load-cell and loading system.

(4) Load the dynamometer to a minimum of 6 equally spaced torque values as indicated by the master load-cell for each in-use range used.

(5) The in-use torque measurement must be within 2 percent of the torque measured by the master system for each load used.

(6) If the in-use torque is not within 2 percent of the master torque, adjust or repair the system. Repeat steps in paragraphs (c)(2) through (c)(5) of this section with the adjusted or repaired system.

(d) Calibrated resistors may not be used for engine flywheel torque transducer calibration, but may be used to span the transducer prior to engine testing.

(e) Perform other engine dynamometer system calibrations as dictated by good engineering practice.

[59 FR 31335, June 17, 1994. Redesignated and amended at 63 FR 56995, 57010, Oct. 23, 1998]

§ 89.308 Sampling system requirements for gaseous emissions.

(a) For each component (pump, sample line section, filters, and so forth) in the heated portion of the sampling system that has a separate source of power or heating element, use engineering judgment to locate the coolest portion of that component and monitor the temperature at that location. If several components are within an oven, then only the surface temperature of the component with the largest thermal mass and the oven temperature need be measured.

(b) If water is removed by condensation, the sample gas temperature shall be monitored within the water trap or the sample dewpoint shall be monitored downstream. In either case, the indicated temperature shall not exceed 7 °C.

[59 FR 31335, June 17, 1994. Redesignated and amended at 63 FR 56995, 57010, Oct. 23, 1998]

§ 89.309 Analyzers required for gaseous emissions.

(a) *Analyzers.* The following instruments are required for analyzing the measured gases:

(1) *Carbon Monoxide (CO) analysis.* (i) The carbon monoxide analyzer must be

of the non-dispersive infrared (NDIR) absorption type.

(ii) The use of linearizing circuits is permitted.

(2) *Carbon Dioxide (CO_2) analysis.* (i) The carbon dioxide analyzer must be of the non-dispersive infrared (NDIR) absorption type.

(ii) The use of linearizing circuits is permitted.

(3) [Reserved]

(4) *Hydrocarbon (HC) analysis.* (i) The hydrocarbon analyzer must be of the heated flame ionization (HFID) type.

(ii) If the temperature of the exhaust gas at the sample probe is below 190 °C, the temperature of the valves, pipework, and so forth, must be controlled so as to maintain a wall temperature of 190 °C ± 11 °C. If the temperature of the exhaust gas at the sample probe is above 190 °C, the temperature of the valves, pipework, and so forth, must be controlled so as to maintain a wall temperature greater than 180 °C.

(iii) The FID oven must be capable of maintaining temperature within 5.5 °C of the set point.

(iv) Fuel and burner air must conform to the specifications in § 89.312.

(v) The percent of oxygen interference must be less than 3 percent, as specified in § 89.319(d).

(5) *Oxides of nitrogen (NO_X) analysis.* (i) This analysis device must consist of the subsequent items, following the sample probe, in the given order:

(A) Pipework, valves, and so forth, controlled so as to maintain a wall temperature above 60 °C.

(B) A NO_2 to NO converter. The NO_2 to NO converter efficiency must be at least 90 percent.

(C) For raw analysis, an ice bath or other cooling device located after the NO_X converter (optional for dilute analysis).

(D) A chemiluminescent detector (CLD or HCLD).

(ii) The quench interference must be less than 3.0 percent as measured in § 89.318.

(b) Other gas analyzers yielding equivalent results may be used with advance approval of the Administrator.

(c) The following requirements must be incorporated in each system used for testing under this subpart.

(1) Carbon monoxide and carbon dioxide measurements must be made on a dry basis (for raw exhaust measurement only). Specific requirements for the means of drying the sample can be found in § 89.309(e).

(2) Calibration or span gases for the NO_X measurement system must pass through the NO_2 to NO converter.

(d) The electromagnetic compatibility (EMC) of the equipment must be on a level as to minimize additional errors.

(e) *Gas drying.* Chemical dryers are not an acceptable method of removing water from the sample. Water removal by condensation is acceptable. A water trap performing this function and meeting the specifications in § 89.308(b) is an acceptable method. Means other than condensation may be used only with prior approval from the Administrator.

[59 FR 31335, June 17, 1994. Redesignated and amended at 63 FR 56995, 57010, Oct. 23, 1998]

§ 89.310 Analyzer accuracy and specifications.

(a) *Measurement accuracy—general.* The analyzers must have a measuring range which allows them to measure the concentrations of the exhaust gas sample pollutants with the accuracies shown in Table 3 in Appendix A of this subpart.

(1) *Response time.* As necessary, measure and account for the response time of the analyzer.

(2) *Precision.* The precision of the analyzer must be, at worst, ±1 percent of full-scale concentration for each range used at or above 100 ppm (or ppmC) or ±2 percent for each range used below 100 ppm (or ppmC). The precision is defined as 2.5 times the standard deviation(s) of 10 repetitive responses to a given calibration or span gas.

(3) *Noise.* The analyzer peak-to-peak response to zero and calibration or span gases over any 10-second period must not exceed 2 percent of full-scale chart deflection on all ranges used.

(4) *Zero drift.* The analyzer zero-response drift during a 1-hour period must be less than 2 percent of full-scale chart deflection on the lowest range used. The zero-response is defined as the mean response including noise to a

zero-gas during a 30-second time interval.

(5) *Span drift*. The analyzer span drift during a 1-hour period must be less than 2 percent of full-scale chart deflection on the lowest range used. The analyzer span is defined as the difference between the span-response and the zero-response. The span-response is defined as the mean response including noise to a span gas during a 30-second time interval.

(b) *Operating procedure for analyzers and sampling system*. Follow the start-up and operating instructions of the instrument manufacturer. Adhere to the minimum requirements given in § 89.314 to § 89.323.

(c) *Emission measurement accuracy—Bag sampling*. (1) Good engineering practice dictates that exhaust emission sample analyzer readings below 15 percent of full-scale chart deflection should generally not be used.

(2) Some high resolution read-out systems, such as computers, data loggers, and so forth, can provide sufficient accuracy and resolution below 15 percent of full scale. Such systems may be used provided that additional calibrations of at least 4 non-zero nominally equally spaced points, using good engineering judgement, below 15 percent of full scale are made to ensure the accuracy of the calibration curves. If a gas divider is used, the gas divider must conform to the accuracy requirements specified in § 89.312(c). The procedure in paragraph (c)(3) of this section may be used for calibration below 15 percent of full scale.

(3) The following procedure shall be followed:

(i) Span the analyzer using a calibration gas meeting the accuracy requirements of § 89.312(c), within the operating range of the analyzer, and at least 90% of full scale.

(ii) Generate a calibration over the full concentration range at a minimum of 6, approximately equally spaced, points (e.g. 15, 30, 45, 60, 75, and 90 percent of the range of concentrations provided by the gas divider). If a gas divider or blender is being used to calibrate the analyzer and the requirements of paragraph (c)(2) of this section are met, verify that a second calibration gas between 10 and 20 percent of full scale can be named within 2 percent of its certified concentration.

(iii) If a gas divider or blender is being used to calibrate the analyzer, input the value of a second calibration gas (a span gas may be used for the CO2 analyzer) having a named concentration between 10 and 20 percent of full scale. This gas shall be included on the calibration curve. Continue adding calibration points by dividing this gas until the requirements of paragraph (c)(2) of this section are met.

(iv) Fit a calibration curve per § 89.319 through § 89.322 for the full scale range of the analyzer using the calibration data obtained with both calibration gases.

(d) *Emission measurement accuracy—continuous sampling*. Analyzers used for continuous analysis must be operated such that the measured concentration falls between 15 and 100 percent of full-scale chart deflection. Exceptions to these limits are:

(1) The analyzer's response may be less than 15 percent or more than 100 percent of full scale if automatic range change circuitry is used and the limits for range changes are between 15 and 100 percent of full-scale chart deflection;

(2) The analyzer's response may be less than 15 percent of full scale if:

(i) Alternative (c)(2) of this section is used to ensure that the accuracy of the calibration curve is maintained below 15 percent; or

(ii) The full-scale value of the range is 155 ppm (or ppmC) or less.

[59 FR 31335, June 17, 1994. Redesignated and amended at 63 FR 56995, 57010, Oct. 23, 1998]

§ 89.311 Analyzer calibration frequency.

(a) Prior to initial use and after major repairs, bench check each analyzer (see § 89.315).

(b) Calibrations are performed as specified in §§ 89.319 through 89.324.

(c) At least monthly, or after any maintenance which could alter calibration, the following calibrations and checks are performed.

(1) Leak check the vacuum side of the system (see § 89.316).

(2) Check that the analysis system response time has been measured and accounted for.

(3) Verify that the automatic data collection system (if used) meets the requirements found in Table 3 in appendix A of this subpart.

(4) Check the fuel flow measurement instrument to insure that the specifications in Table 3 in appendix A of this subpart are met.

(d) Verify that all NDIR analyzers meet the water rejection ratio and the CO_2 rejection ratio as specified in § 89.318.

(e) Verify that the dynamometer test stand and power output instrumentation meet the specifications in Table 3 in appendix A of this subpart.

[59 FR 31335, June 17, 1994. Redesignated at 63 FR 56995, Oct. 23, 1998]

§ 89.312 Analytical gases.

(a) The shelf life of all calibration gases must not be exceeded. The expiration date of the calibration gases stated by the gas manufacturer shall be recorded.

(b) *Pure gases*. The required purity of the gases is defined by the contamination limits given below. The following gases must be available for operation:

(1) Purified nitrogen (Contamination ≤ 1 ppm C, ≤ 1 ppm CO, ≤ 400 ppm CO_2, ≤ 0.1 ppm NO)

(2) [Reserved]

(3) Hydrogen-helium mixture (40 ± 2 percent hydrogen, balance helium) (Contamination ≤ 31 ppm C, ≤ 400 ppm CO)

(4) Purified synthetic air (Contamination ≤ 1 ppm C, ≤ 1 ppm CO, ≤ 400 ppm CO_2, ≤ 0.1 ppm NO) (Oxygen content between 18–21 percent vol.)

(c) *Calibration and span gases*. (1) Calibration gas values are to be derived from NIST Standard Reference Materials (SRM's) or other standardized gas samples and are to be single blends as listed in the following paragraph.

(2) Mixtures of gases having the following chemical compositions shall be available:

(i) C_3H_8 and purified synthetic air ;

(ii) C_3H_8 and purified nitrogen (optional for raw measurements);

(iii) CO and purified nitrogen;

(iv) NO_X and purified nitrogen (the amount of NO_2 contained in this calibration gas must not exceed 5 percent of the NO content);

(v) CO_2 and purified nitrogen.

(3) The true concentration of a span gas must be within ±2 percent of the NIST gas standard. The true concentration of a calibration gas must be within ±1 percent of the NIST gas standard. The use of precision blending devices (gas dividers) to obtain the required calibration gas concentrations is acceptable, provided that the blended gases are accurate to within ±1.5 percent of NIST gas standards, or other gas standards which have been approved by the Administrator. This accuracy implies that primary gases used (or blending) must be ''named'' to an accuracy of at least ±1 percent, traceable to NIST or other approved gas standards. All concentrations of calibration gas shall be given on a volume basis (volume percent or volume ppm).

(4) The gas concentrations used for calibration and span may also be obtained by means of a gas divider, either diluting with purified N_2 or diluting with purified synthetic air. The accuracy of the mixing device must be such that the concentration of the diluted gases may be determined to within ±2 percent.

(d) Oxygen interference check gases shall contain propane with 350 ppmC ±75 ppmC hydrocarbon. The three oxygen interference gases shall contain 21% ± 1% O_2, 10% ± 1% O_2, and 5% ± 1% O_2. The concentration value shall be determined to calibration gas tolerances by chromatographic analysis of total hydrocarbons plus impurities or by dynamic blending. Nitrogen shall be the predominant diluent with the balance oxygen.

(e) Fuel for the FID shall be a blend of 40 percent ±2 percent hydrogen with the balance being helium. The mixture shall contain less than 1 ppm equivalent carbon response; 98 to 100 percent hydrogen fuel may be used with advance approval of the Administrator.

(f) Hydrocarbon analyzer burner air. The concentration of oxygen for raw sampling must be within 1 mole percent of the oxygen concentration of the burner air used in the latest oxygen interference check (%O_2I). If the difference in oxygen concentration is greater than 1 mole percent, then the oxygen interference must be checked and, if necessary, the analyzer adjusted to meet the %O_2I requirements. The

burner air must contain less than 2 ppmC hydrocarbon.

(g) Gases for the methane analyzer shall be single blends of methane using air as the diluent.

[59 FR 31335, June 17, 1994. Redesignated and amended at 63 FR 56995, 57010, Oct. 23, 1998]

§ 89.313 Initial calibration of analyzers.

(a) *Warming-up time*. The warming-up time should be according to the recommendations of the manufacturer. If not specified, a minimum of two hours shall be allowed for warming up the analyzers.

(b) *NDIR and HFID analyzer*. The NDIR analyzer shall be tuned and maintained according to the instrument manufacturer's instructions. The combustion flame of the HFID analyzer shall be optimized in order to meet the specifications in § 89.319(b)(2).

(c) *Zero setting and calibration*. (1) Using purified synthetic air (or nitrogen), the CO, CO_2, NO_X, and HC analyzers shall be set at zero.

(2) Introduce the appropriate calibration gases to the analyzers and the values recorded. The same gas flow rates shall be used as when sampling exhaust.

(d) *Rechecking of zero setting*. The zero setting shall be rechecked and the procedure described in paragraph (c) of this section repeated, if necessary.

[59 FR 31335, June 17, 1994. Redesignated at 63 FR 56995, Oct. 23, 1998]

§ 89.314 Pre- and post-test calibration of analyzers.

Each operating range used during the test shall be checked prior to and after each test in accordance with the following procedure. (A chronic need for parameter adjustment can indicate a need for instrument maintenance.):

(a) The calibration is checked by using a zero gas and a span gas whose nominal value is between 75 percent and 100 percent of full-scale, inclusive, of the measuring range.

(b) After the end of the final mode, a zero gas and the same span gas will be used for rechecking. As an option, the zero and span may be rechecked at the end of each mode or each test segment. The analysis will be considered acceptable if the difference between the two measuring results is less than 2 percent of full scale.

[59 FR 31335, June 17, 1994. Redesignated and amended at 63 FR 56995, 57011, Oct. 23, 1998]

§ 89.315 Analyzer bench checks.

(a) Prior to initial use and after major repairs verify that each analyzer complies with the specifications given in Table 3 in appendix A of this subpart.

(b) If a stainless steel NO_2 to NO converter is used, condition all new or replacement converters. The conditioning consists of either purging the converter with air for a minimum of 4 hours or until the converter efficiency is greater than 90 percent. The converter must be at operational temperature while purging. Do not use this procedure prior to checking converter efficiency on in-use converters.

[59 FR 31335, June 17, 1994. Redesignated at 63 FR 56995, Oct. 23, 1998]

§ 89.316 Analyzer leakage and response time.

(a) *Vacuum side leak check*. (1) Any location within the analysis system where a vacuum leak could affect the test results must be checked.

(2) The maximum allowable leakage rate on the vacuum side is 0.5 percent of the in-use flow rate for the portion of the system being checked. The analyzer flows and bypass flows may be used to estimate the in-use flow rates.

(3) The sample probe and the connection between the sample probe and valve V2 (see Figure 1 in appendix B of this subpart) may be excluded from the leak check.

(b) [Reserved]

(c) The response time shall be accounted for in all emission measurement and calculations.

[59 FR 31335, June 17, 1994. Redesignated and amended at 63 FR 56995, 57011, Oct. 23, 1998]

§ 89.317 NO_X converter check.

(a) Prior to its introduction into service, and monthly thereafter, the chemiluminescent oxides of nitrogen analyzer shall be checked for NO_2 to NO converter efficiency. Figure 2 in appendix B of this subpart is a reference for the following paragraphs.

(b) Follow good engineering practices for instrument start-up and operation. Adjust the analyzer to optimize performance.

(c) Zero the oxides of nitrogen analyzer with zero-grade air or zero-grade nitrogen.

(d) Connect the outlet of the NO_X generator to the sample inlet of the oxides of nitrogen analyzer which has been set to the most common operating range.

(e) Introduce into the NO_X generator analyzer-system an NO-in-nitrogen (N_2) mixture with an NO concentration equal to approximately 80 percent of the most common operating range. The NO_2 content of the gas mixture shall be less than 5 percent of the NO concentration.

(f) With the oxides of nitrogen analyzer in the NO mode, record the concentration of NO indicated by the analyzer.

(g) Turn on the NO_X generator O_2 (or air) supply and adjust the O_2 (or air) flow rate so that the NO indicated by the analyzer is about 10 percent less than indicated in paragraph (f) of this section. Record the concentration of NO in this NO+O_2 mixture.

(h) Switch the NO_X generator to the generation mode and adjust the generation rate so that the NO measured on the analyzer is 20 percent of that measured in paragraph (f) of this section. There must be at least 10 percent unreacted NO at this point. Record the concentration of residual NO.

(i) Switch the oxides of nitrogen analyzer to the NO_X mode and measure total NO_X. Record this value.

(j) Switch off the NO_X generator but maintain gas flow through the system. The oxides of nitrogen analyzer will indicate the NO_X in the NO+O_2 mixture. Record this value.

(k) Turn off the NO_X generator O_2 (or air) supply. The analyzer will now indicate the NO_X in the original NO-in-N_2 mixture. This value should be no more than 5 percent above the value indicated in paragraph (f) of this section.

[59 FR 31335, June 17, 1994. Redesignated and amended at 63 FR 56995, 57011, Oct. 23, 1998]

§ 89.318 Analyzer interference checks.

(a) Gases present in the exhaust other than the one being analyzed can interfere with the reading in several ways. Positive interference occurs in NDIR and PMD instruments when the interfering gas gives the same effect as the gas being measured, but to a lesser degree. Negative interference occurs in NDIR instruments by the interfering gas broadening the absorption band of the measured gas and in CLD instruments by the interfering gas quenching the radiation. The interference checks described in this section are to be made initially and after any major repairs that could affect analyzer performance.

(b) *CO analyzer water and CO_2 interference checks.* Prior to its introduction into service and annually thereafter, the NDIR carbon monoxide analyzer shall be checked for response to water vapor and CO_2.

(1) Follow good engineering practices for instrument start-up and operation. Adjust the analyzer to optimize performance on the most sensitive range to be used.

(2) Zero the carbon monoxide analyzer with either zero-grade air or zero-grade nitrogen.

(3) Bubble a mixture of 3 percent CO_2 in N_2 through water at room temperature and record analyzer response.

(4) An analyzer response of more than 1 percent of full scale for ranges above 300 ppm full scale or more than 3 ppm on ranges below 300 ppm full scale requires corrective action. (Use of conditioning columns is one form of corrective action which may be taken.)

(c) *NO_X analyzer quench check.* The two gases of concern for CLD (and HCLD) analyzers are CO_2 and water vapor. Quench responses to these two gases are proportional to their concentrations and, therefore, require test techniques to determine quench at the highest expected concentrations experienced during testing.

(1) *NO_X analyzer CO_2 quench check.* A CO_2 span gas having a concentration of 80 percent to 100 percent of full scale of the maximum operating range used during testing shall be passed through the CO_2 NDIR analyzer and the value recorded as *a*. It is diluted approximately 50 percent with NO span gas and then passed through the CO_2 NDIR and CLD (or HCLD), with the CO_2 and NO values recorded as *b* and *c* respectively. The CO_2 shall then be shut off

and only the NO span gas passed through the CLD (or HCLD) and the NO value recorded as *d*. Percent CO_2 quench shall be calculated as follows and shall not exceed 3 percent:

$$\%\,CO_2\ \text{quench} = 100 \times \left(1 - \frac{(c \times a)}{(d \times a) - (d \times b)}\right) \times (a / b)$$

Where:

a = Undiluted CO_2 concentration (percent)
b = Diluted CO2 concentration (percent)
c = Diluted NO concentration (ppm)
d = Undiluted NO concentration (ppm)

(2) *NO_X analyzer water quench check.* (i) This check applies to wet measurements only. An NO span gas having a concentration of 80 to 100 percent of full scale of a normal operating range shall be passed through the CLD (or HCLD) and the response recorded as D. The NO span gas shall then be bubbled through water at room temperature and passed through the CLD (or HCLD) and the analyzer response recorded as AR. Determine and record the bubbler absolute operating pressure and the bubbler water temperature. (It is important that the NO span gas contains minimal NO_2 concentration for this check. No allowance for absorption of NO_2 in water has been made in the following quench calculations. This test may be optionally run in the NO mode to minimize the effect of any NO_2 in the NO span gas.)

(ii) Calculations for water quench must consider dilution of the NO span gas with water vapor and scaling of the water vapor concentration of the mixture to that expected during testing. Determine the mixture's saturated vapor pressure (designated as *Pwb*) that corresponds to the bubbler water temperature. Calculate the water concentration (Z1, percent) in the mixture by the following equation:

$$Z1 = 100 \times \frac{Pwb}{GP}$$

where

GP = analyzer operating pressure (Pa)

(iii) Calculate the expected dilute NO span gas and water vapor mixture concentration (designated as *D1*) by the following equation:

$$D1 = D \times \left(1 - \frac{Z1}{100}\right)$$

(iv)(A) The maximum raw or dilute exhaust water vapor concentration expected during testing (designated as Wm) can be estimated from the CO_2 span gas (or as defined in the equation in this paragraph and designated as A) criteria in paragraph (c)(1) of this section and the assumption of a fuel atom H/C ratio of 1.8:1 as:

$Wm(\%) = 0.9 \times A(\%)$

Where:

A = maximum CO2 concentration expected in the sample system during testing.

(B) Percent water quench shall not exceed 3 percent and shall be calculated by:

$$\%\text{Water Quench} = 100 \times \frac{D1 - AR}{D1} \times \frac{Wm}{Z1}$$

[59 FR 31335, June 17, 1994. Redesignated and amended at 63 FR 56995, 57011, Oct. 23, 1998; 63 FR 58101, Oct. 29, 1998]

§ 89.319 Hydrocarbon analyzer calibration.

(a) The FID hydrocarbon analyzer shall receive the initial and periodic calibration as described in this section.

The HFID used with petroleum-fueled diesel (compression-ignition) engines shall be operated to a set point ±5.5 °C between 185 and 197 °C.

(b) *Initial and periodic optimization of detector response.* Prior to introduction into service and at least annually thereafter, adjust the FID hydrocarbon analyzer for optimum hydrocarbon response as specified in this paragraph. Alternate methods yielding equivalent results may be used, if approved in advance by the Administrator.

(1) Follow good engineering practices for initial instrument start-up and basic operating adjustment using the appropriate fuel (see § 89.312(e)) and zero-grade air.

(2) Optimize the FID's response on the most common operating range. The response is to be optimized with respect to fuel pressure or flow. Efforts shall be made to minimize response variations to different hydrocarbon species that are expected to be in the exhaust. Good engineering judgment is to be used to trade off optimal FID response to propane-in-air against reductions in relative responses to other hydrocarbons. A good example of trading off response on propane for relative responses to other hydrocarbon species is given in Society of Automotive Engineers (SAE) Paper No. 770141, ''Optimization of Flame Ionization Detector for Determination of Hydrocarbon in Diluted Automotive Exhausts''; author Glenn D. Reschke. It is also required that the response be set to optimum condition with respect to air flow and sample flow. Heated Flame Ionization Detectors (HFIDs) must be at their specified operating temperature. One of the following procedures is required for FID or HFID optimization:

(i) The procedure outlined in Society of Automotive Engineers (SAE) paper No. 770141, ''Optimization of a Flame Ionization Detector for Determination of Hydrocarbon in Diluted Automotive Exhausts''; author, Glenn D. Reschke. This procedure has been incorporated by reference at § 89.6.

(ii) The HFID optimization procedures outlined in 40 CFR part 86, subpart D.

(iii) Alternative procedures may be used if approved in advance by the Administrator.

(iv) The procedures specified by the manufacturer of the FID or HFID.

(3) After the optimum flow rates have been determined, record them for future reference.

(c) *Initial and periodic calibration.* Prior to introduction into service, after any maintenance which could alter calibration, and monthly thereafter, the FID or HFID hydrocarbon analyzer shall be calibrated on all normally used instrument ranges using the steps in this paragraph (c). Use the same flow rate and pressures as when analyzing samples. Calibration gases shall be introduced directly at the analyzer, unless the ''overflow'' calibration option of 40 CFR part 86, subpart N, for the HFID is taken. New calibration curves need not be generated each month if the existing curve can be verified as continuing to meet the requirements of paragraph (c)(3) of this section.

(1) Adjust analyzer to optimize performance.

(2) Zero the hydrocarbon analyzer with zero-grade air.

(3) Calibrate on each used operating range with propane-in-air (dilute or raw) or propane-in-nitrogen (raw) calibration gases having nominal concentrations starting between 10–15 percent and increasing in at least six incremental steps to 90 percent (e.g., 15, 30, 45, 60, 75, and 90 percent of that range) of that range. The incremental steps are to be spaced to represent good engineering practice. For each range calibrated, if the deviation from a least-squares best-fit straight line is 2 percent or less of the value at each data point, concentration values may be calculated by use of a single calibration factor for that range. If the deviation exceeds 2 percent at each nonzero data point and within ±0.3 percent of full scale on the zero, the best-fit non-linear equation which represents the data to within these limits shall be used to determine concentration.

(d) *Oxygen interference optimization (required for raw).* Choose a range where the oxygen interference check gases will fall in the upper 50 percent. Conduct the test, as outlined in this paragraph, with the oven temperature set as required by the instrument manufacturer. Oxygen interference check

gas specifications are found in § 89.312(d).

(1) Zero the analyzer.

(2) Span the analyzer with the 21% oxygen interference gas specified in § 89.312(d).

(3) Recheck zero response. If it has changed more than 0.5 percent of full scale repeat paragraphs (d)(1) and (d)(2) of this section to correct problem.

(4) Introduce the 5 percent and 10 percent oxygen interference check gases.

(5) Recheck the zero response. If it has changed more ±1 percent of full scale, repeat the test.

(6) Calculate the percent of oxygen interference (designated as percent O_2I) for each mixture in paragraph (d)(4) of this section.

$$\text{percent } O_2I = ((B–C) \times 100)/B$$

Where:

A = hydrocarbon concentration (ppmC) of the span gas used in paragraph (d)(2) of this section.

B = hydrocarbon concentration (ppmC) of the oxygen interference check gases used in paragraph (d)(4) of this section.

C = analyzer response (ppmC) = A/D; where

D = (percent of full-scale analyzer response due to A) × (percent of full-scale analyzer response due to B)

[59 FR 31335, June 17, 1994. Redesignated and amended at 63 FR 56995, 57011, Oct. 23, 1998]

§ 89.320 Carbon monoxide analyzer calibration.

(a) Calibrate the NDIR carbon monoxide as described in this section.

(b) *Initial and periodic interference check*. Prior to its introduction into service and annually thereafter, the NDIR carbon monoxide analyzer shall be checked for response to water vapor and CO_2 in accordance with § 318.96(b).

(c) *Initial and periodic calibration*. Prior to its introduction into service, after any maintenance which could alter calibration, and every two months thereafter, the NDIR carbon monoxide analyzer shall be calibrated. New calibration curves need not be generated every two months if the existing curve can be verified as continuing to meet the requirements of paragraph (c)(3) of this section.

(1) Adjust the analyzer to optimize performance.

(2) Zero the carbon monoxide analyzer with either zero-grade air or zero-grade nitrogen.

(3) Calibrate on each used operating range with carbon monoxide-in-N_2 calibration gases having nominal concentrations starting between 10 and 15 percent and increasing in at least six incremental steps to 90 percent (e.g., 15, 30, 45, 60, 75, and 90 percent) of that range. The incremental steps are to be spaced to represent good engineering practice. For each range calibrated, if the deviation from a least-squares best-fit straight line is 2 percent or less of the value at each non-zero data point and within ±0.3 percent of full scale on the zero, concentration values may be calculated by use of a single calibration factor for that range. If the deviation exceeds these limits, the best-fit non-linear equation which represents the data to within these limits shall be used to determine concentration.

(d) The initial and periodic interference, system check, and calibration test procedures specified in part 86, subpart D of this chapter may be used in lieu of the procedures specified in this section.

[59 FR 31335, June 17, 1994. Redesignated and amended at 63 FR 56995, 57012, Oct. 23, 1998]

§ 89.321 Oxides of nitrogen analyzer calibration.

(a) The chemiluminescent oxides of nitrogen analyzer shall receive the initial and periodic calibration described in this section.

(b) Prior to its introduction into service, and monthly thereafter, the chemiluminescent oxides of nitrogen analyzer is checked for NO_2 to NO converter efficiency according to § 89.317.

(c) *Initial and periodic calibration*. Prior to its introduction into service, after any maintenance which could alter calibration, and monthly thereafter, the chemiluminescent oxides of nitrogen analyzer shall be calibrated on all normally used instrument ranges. New calibration curves need not be generated each month if the existing curve can be verified as continuing to meet the requirements of paragraph (c)(3) of this section. Use the same flow rate as when analyzing samples. Proceed as follows:

(1) Adjust analyzer to optimize performance.

(2) Zero the oxides of nitrogen analyzer with zero-grade air or zero-grade nitrogen.

(3) Calibrate on each normally used operating range with NO-in-N_2 calibration gases with nominal concentrations starting at between 10 and 15 percent and increasing in at least six incremental steps to 90 percent (e.g., 15, 30, 45, 60, 75, and 90 percent) of that range. The incremental steps are to be spaced to represent good engineering practice. For each range calibrated, if the deviation from a least-squares best-fit straight line is 2 percent or less of the value at each non-zero data point and within ±0.3 percent of full scale on the zero, concentration values may be calculated by use of a single calibration factor for that range. If the deviation exceeds these limits, the best-fit nonlinear equation which represents the data to within these limits shall be used to determine concentration.

(d) The initial and periodic interference, system check, and calibration test procedures specified in part 86, subpart D of this chapter may be used in lieu of the procedures specified in this section.

[59 FR 31335, June 17, 1994. Redesignated and amended at 63 FR 56995, 57012, Oct. 23, 1998]

§ 89.322 Carbon dioxide analyzer calibration.

(a) Prior to its introduction into service, after any maintenance which could alter calibration, and bi-monthly thereafter, the NDIR carbon dioxide analyzer shall be calibrated on all normally used instrument ranges. New calibration curves need not be generated each month if the existing curve can be verified as continuing to meet the requirements of paragraph (a)(3) of this section. Proceed as follows:

(1) Follow good engineering practices for instrument start-up and operation. Adjust the analyzer to optimize performance.

(2) Zero the carbon dioxide analyzer with either zero-grade air or zero-grade nitrogen.

(3) Calibrate on each normally used operating range with carbon dioxide-in-N_2 calibration or span gases having nominal concentrations starting between 10 and 15 percent and increasing in at least six incremental steps to 90 percent (e.g., 15, 30, 45, 60, 75, and 90 percent) of that range. The incremental steps are to be spaced to represent good engineering practice. For each range calibrated, if the deviation from a least-squares best-fit straight line is 2 percent or less of the value at each non-zero data point and within ±0.3 percent of full scale on the zero, concentration values may be calculated by use of a single calibration factor for that range. If the deviation exceeds these limits, the best-fit nonlinear equation which represents the data to within these limits shall be used to determine concentration.

(b) The initial and periodic interference, system check, and calibration test procedures specified in part 86, subpart D of this chapter may be used in lieu of the procedures in this section.

[59 FR 31335, June 17, 1994. Redesignated and amended at 63 FR 56995, 57012, Oct. 23, 1998]

§ 89.323 NDIR analyzer calibration.

(a) *Detector optimization*. If necessary, follow the instrument manufacturer's instructions for initial start-up and basic operating adjustments.

(b) *Calibration curve*. Develop a calibration curve for each range used as follows:

(1) Zero the analyzer.

(2) Span the analyzer to give a response of approximately 90 percent of full-scale chart deflection.

(3) Recheck the zero response. If it has changed more than 0.5 percent of full scale, repeat the steps given in paragraphs (b)(1) and (b)(2) of this section.

(4) Record the response of calibration gases having nominal concentrations starting between 10 and 15 percent and increasing in at least six incremental steps to 90 percent of that range. The incremental steps are to be spaced to represent good engineering practice.

(5) Generate a calibration curve. The calibration curve shall be of fourth order or less, have five or fewer coefficients. If any range is within 2 percent of being linear a linear calibration may be used. Include zero as a data point. Compensation for known impurities in the zero gas can be made to the zero-

data point. The calibration curve must fit the data points within 2 percent of point.

(6) Optional. A new calibration curve need not be generated if:

(i) A calibration curve conforming to paragraph (b)(5) of this section exists; or

(ii) The responses generated in paragraph (b)(4) of this section are within 1 percent of full scale or 2 percent of point, whichever is less, of the responses predicted by the calibration curve for the gases used in paragraph (b)(4) of this section.

(7) If multiple range analyzers are used, the lowest range used must meet the curve fit requirements below 15 percent of full scale.

[59 FR 31335, June 17, 1994. Redesignated at 63 FR 56995, Oct. 23, 1998]

§ 89.324 Calibration of other equipment.

(a) Other test equipment used for testing shall be calibrated as often as required by the instrument manufacturer or necessary according to good practice.

(b) If a methane analyzer is used, the methane analyzer shall be calibrated prior to introduction into service and monthly thereafter:

(1) Follow the manufacturer's instructions for instrument startup and operation. Adjust the analyzer to optimize performance.

(2) Zero the methane analyzer with zero-grade air.

(3) Calibrate on each normally used operating range with CH_4 in air with nominal concentrations starting between 10 and 15 percent and increasing in at least six incremental steps to 90 percent (e.g., 15, 30, 45, 60, 75, and 90 percent) of that range. The incremental steps are to be spaced to represent good engineering practice. For each range calibrated, if the deviation from a least-squares best-fit straight line is 2 percent or less of the value at each non-zero data point and within ±0.3 percent of full scale on the zero, concentration values may be calculated by use of a single calibration factor for that range. If the deviation exceeds these limits, the best-fit nonlinear equation which represents the data to within these limits shall be used to determine concentration.

[63 FR 57013, Oct. 23, 1998]

§ 89.325 Engine intake air temperature measurement.

(a) Engine intake air temperature measurement must be made within 122 cm of the engine. The measurement location must be made either in the supply system or in the air stream entering the supply system.

(b) The temperature measurements shall be accurate to within ±2 °C.

[59 FR 31335, June 17, 1994. Redesignated at 63 FR 56995, Oct. 23, 1998]

§ 89.326 Engine intake air humidity measurement.

(a) *Humidity conditioned air supply*. Air that has had its absolute humidity altered is considered humidity- conditioned air. For this type of intake air supply, the humidity measurements must be made within the intake air supply system and after the humidity conditioning has taken place.

(b) *Nonconditioned air supply procedure*. Humidity measurements in nonconditioned intake air supply systems must be made in the intake air stream entering the supply system. Alternatively, the humidity measurements can be measured within the intake air supply stream.

[59 FR 31335, June 17, 1994. Redesignated at 63 FR 56995, Oct. 23, 1998]

§ 89.327 Charge cooling.

For engines with an air-to-air intercooler (or any other low temperature charge air cooling device) between the turbocharger compressor and the intake manifold, follow SAE J1937. This procedure has been incorporated by reference. See § 89.6. The temperature of the cooling medium and the temperature of the charge air shall be monitored and recorded.

[59 FR 31335, June 17, 1994. Redesignated at 63 FR 56995, Oct. 23, 1998]

§ 89.328 Inlet and exhaust restrictions.

(a) The manufacturer is liable for emission compliance over the full range of restrictions that are specified by the manufacturer for that particular engine.

(b) Perform testing at the following inlet and exhaust restriction settings.

(1) Equip the test engine with an air inlet system presenting an air inlet restriction within 5 percent of the upper limit at maximum air flow, as specified by the engine manufacturer for a clean air cleaner. A system representative of the installed engine may be used. In other cases a test shop system may be used.

(2) The exhaust backpressure must be within 5 percent of the upper limit at maximum declared power, as specified by the engine manufacturer. A system representative of the installed engine may be used. In other cases a test shop system may be used.

[59 FR 31335, June 17, 1994. Redesignated and amended at 63 FR 56995, 57013, Oct. 23, 1998]

§ 89.329 Engine cooling system.

An engine cooling system is required with sufficient capacity to maintain the engine at normal operating temperatures as prescribed by the engine manufacturer.

[59 FR 31335, June 17, 1994. Redesignated at 63 FR 56995, Oct. 23, 1998]

§ 89.330 Lubricating oil and test fuels.

(a) *Lubricating oil.* Use the engine lubricating oil for testing that meets the requirements as specified by the manufacturer for a particular engine and intended usage. Record the specifications of the lubricating oil used for the test.

(b) *Test fuels.* (1) Use diesel fuels for testing which are clean and bright, with pour and cloud points adequate for operability. The diesel fuel may contain nonmetallic additives as follows: Cetane improver, metal deactivator, antioxidant, dehazer, antirust, pour depressant, dye, dispersant, and biocide.

(2) Use petroleum fuel meeting the specifications in Table 4 in Appendix A of this subpart, or substantially equivalent specifications approved by the Administrator, for exhaust emission testing. The grade of diesel fuel used must be commercially designated as ''Type 2–D'' grade diesel fuel and recommended by the engine manufacturer.

(3) Testing of Tier 1 engines rated under 37 kW or Tier 2 engines rated at or above 37 kW that is conducted by the Administrator shall be performed using test fuels that meet the specifications in Table 4 in Appendix A of this subpart and that have a sulfur content no higher than 0.20 weight percent.

(c) Other fuels may be used for testing provided they meet the following qualifications:

(1) They are commercially available;

(2) Information acceptable to the Administrator is provided to show that only the designated fuel would be used in customer service;

(3) Use of a fuel listed under paragraph (b) of this section would have a detrimental effect on emissions or durability; and

(4) Fuel specifications are approved in writing by the Administrator prior to the start of testing.

(d) Report the specification range of the fuel to be used under paragraphs (b)(2) and (c)(1) through (c)(4) of this section in the application for certification in accordance with § 89.115 (a)(8).

[59 FR 31335, June 17, 1994. Redesignated and amended at 63 FR 56995, 57013, Oct. 23, 1998]

§ 89.331 Test conditions.

(a) *General requirements.* Calculate all volumes and volumetric flow rates at standard conditions for temperature and pressure (0 °C and 101.3 kPa), and these conditions must be used consistently throughout all calculations.

(b) *Engine test conditions.* Measure the absolute temperature (designated as *T* and expressed in Kelvin) of the engine air at the inlet to the engine, and the dry atmospheric pressure (designated as *p* and expressed in kPa), and determine the parameter *f* according to the following provisions:

(1) Naturally aspirated and mechanically supercharged engines:

$$f = \frac{99}{p_s} \times \left(\frac{T}{298}\right)^{0.7}$$

(2) Turbocharged engine with or without cooling of inlet air:

$$f = \left(\frac{99}{p_s}\right)^{0.7} \times \left(\frac{T}{298}\right)^{1.5}$$

(c) For a test to be recognized as valid, the parameter f shall be between the limits as shown below:

$$0.98 < f < 1.02$$

[59 FR 31335, June 17, 1994. Redesignated at 63 FR 56995, Oct. 23, 1998]

APPENDIX A TO SUBPART D OF PART 89—TABLES

TABLE 1—ABBREVIATIONS USED IN SUBPART D

CLD	Chemiluminescent detector.
CO	Carbon monoxide.
CO_2	Carbon dioxide.
HC	Hydrocarbons.
HCLD	Heated chemiluminescent detector.
HFID	Heated flame ionization detector.
GC	Gas chromatograph.
NDIR	Non-dispersive infra-red analyzer.
NIST	National Institute for Standards and Testing.
NO	Nitric Oxide.
NO_2	Nitrogen Dioxide.
NO_X	Oxides of nitrogen.
O_2	Oxygen.

TABLE 2—SYMBOLS USED IN SUBPARTS D AND E

Symbol	Term	Unit
conc	Concentration (ppm by volume)	ppm
f	Engine specific parameter considering atmospheric conditions	
F_{FCB}	Fuel specific factor for the carbon balance calculation	
F_{FD}	Fuel specific factor for exhaust flow calculation on dry basis	
F_{FH}	Fuel specific factor representing the hydrogen to carbon ratio	
F_{FW}	Fuel specific factor for exhaust flow calculation on wet basis	
FR	Rate of fuel consumed	g/h
G_{AIRW}	Intake air mass flow rate on wet basis	kg/h
G_{AIRD}	Intake air mass flow rate on dry basis	kg/h
G_{EXHW}	Exhaust gas mass flow rate on wet basis	kg/h
G_{Fuel}	Fuel mass flow rate	kg/h
H	Absolute humidity (water content related to dry air)	g/kg
i	Subscript denoting an individual mode	
K_H	Humidity correction factor	
L	Percent torque related to maximum torque for the test mode	%
mass	Pollutant mass flow	g/h
$n_{d,i}$	Engine speed (average at the i'th mode during the cycle)	1/min
P_s	Dry atmospheric pressure	kPa
P_d	Test ambient saturation vapor pressure at ambient temperature	kPa
P	Observed brake power output uncorrected	kW
P_{AUX}	Declared total power absorbed by auxiliaries fitted for the test	kW
P_M	Maximum power measured at the test speed under test conditions	kW
P_i	$P_i = P_{M,i} + P_{AUX,i}$	
P_B	Total barometric pressure (average of the pre-test and post-test values)	kPa
P_v	Saturation pressure at dew point temperature	kPa
R_a	Relative humidity of the ambient air	%
S	Dynamometer setting	kW
T	Absolute temperature at air inlet	K
T_{be}	Air temperature after the charge air cooler (if applicable) (average)	K
T_{cout}	Coolant temperature outlet (average)	K
T_{Dd}	Absolute dewpoint temperature	K
$T_{d,i}$	Torque (average at the i'th mode during the cycle)	N-m
T_{SC}	Temperature of the intercooled air	K
$T_{ref.}$	Reference temperature	K
V_{EXHD}	Exhaust gas volume flow rate on dry basis	m^3/h
V_{AIRW}	Intake air volume flow rate on wet basis	m^3/h
P_B	Total barometric pressure	kPa
V_{EXHW}	Exhaust gas volume flow rate on wet basis	m^3/h
WF	Weighing factor	
WF_E	Effective weighing factor	

TABLE 3—MEASUREMENT ACCURACY AND CALIBRATION FREQUENCY

No.	Item	Calibration accuracy [1]	Calibration frequency
1	Engine speed	± 2%	30 days.
2	Torque	Larger of ± 2% of point or ± 1% of engine maximum.	30 days.
3	Fuel consumption (raw measurement)	± 2% of engine maximum	30 days.
4	Air consumption (raw measurement)	± 2% of engine maximum	As required.
5	Coolant temperature	±2°K	As required.
6	Lubricant temperature	±2°K	As required.
7	Exhaust backpressure	± 1.0% of engine maximum	As required.

TABLE 3—MEASUREMENT ACCURACY AND CALIBRATION FREQUENCY—Continued

No.	Item	Calibration accuracy [1]	Calibration frequency
8	Inlet depression	1.0% of engine maximum	As required.
9	Exhaust gas temperature	±15°K	As required.
10	Air inlet temperature (combustion air)	±2°K	As required.
11	Atmospheric pressure	± 0.5%	As required.
12	Humidity (combustion air) (g of H_2O/Kg of dry air)	± 0.5	As required.
13	Fuel temperature	±2°K	As required.
14	Temperature with regard to dilution tunnel	±2°K	As required.
15	Dilution air humidity (g of H_2O/Kg of dry air)	± 0.5	As required.
16	HC analyzer	± 2%	Monthly or as required.
17	CO analyzer	± 2%	Once per 60 days or as required.
18	NO_X analyzer	± 2%	Monthly or as required.
19	Methane analyzer	± 2%	Monthly or as required.
20	NO_X converter efficiency check	90%	Monthly.
21	CO_2 analyzer	± 2%	Once per 60 days or as required.

[1] All accuracy requirements pertain to the final recorded value which is inclusive of the data acquisition system.

TABLE 4—FEDERAL TEST FUEL SPECIFICATIONS

Item	Procedure (ASTM) [1]	Value (type 2–D)
Cetane	D613–95	40–48
Distillation Range:		
IBP, °C	D86–97	171–204
10% point, °C	86–97	204–238
50% point, °C	86–97	243–282
90% point, °C	86–97	293–332
EP, °C	86–97	321–366
Gravity, API	D287–92	32–37
Total Sulfur, %mass	D129–95 or D2622–98	0.03—0.40
Hydrocarbon composition:		
Aromatics, %vol	D1319–98 or D5186–96	[2] 10
Paraffins, Naphthenes, Olefins	D1319–98	([3])
Flashpoint, °C (minimum)	D93–97	54
Viscosity @ 38°C, Centistokes	D445–97	2.0–3.2

[1] All ASTM procedures in this table have been incorporated by reference. See § 89.6.
[2] Minimum.
[3] Remainder.

[63 FR 57013, Oct. 23, 1998]

APPENDIX B TO SUBPART D OF PART 89—FIGURES

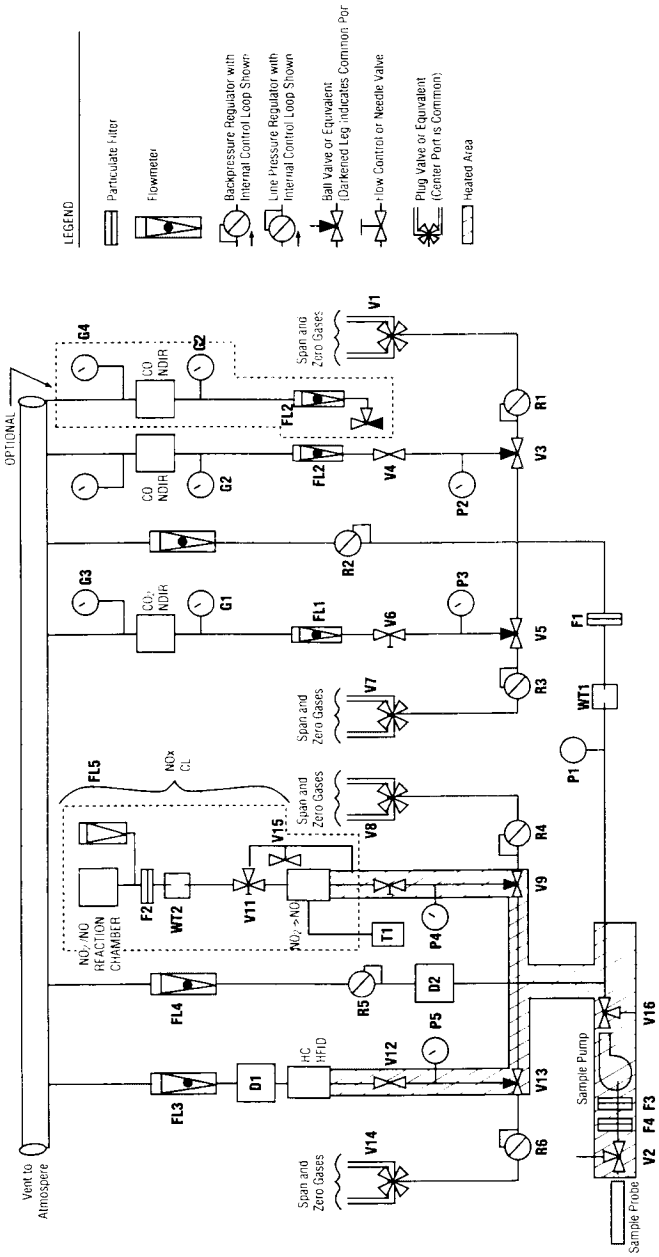

Figure 1. — Exhaust Gas Sampling and Analytical Train

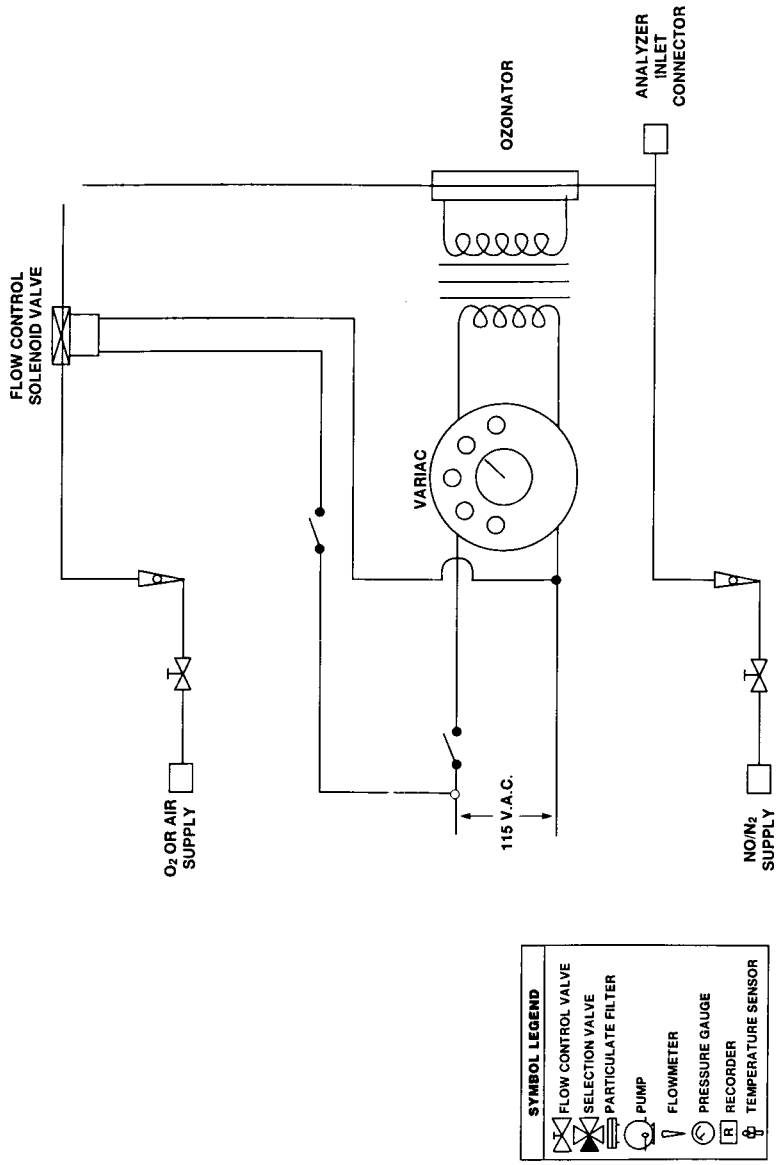

Figure 2. — NOx Converter Efficiency Detector

Subpart E—Exhaust Emission Test Procedures

§ 89.401 Scope; applicability.

(a) This subpart describes the procedures to follow in order to perform exhaust emission tests on new nonroad compression-ignition engines subject to the provisions of subpart B of this part.

(b) Exhaust gases, either raw or dilute, are sampled while the test engine is operated using the appropriate test cycle on an engine dynamometer. The

exhaust gases receive specific component analysis determining concentration of pollutant, exhaust volume, the fuel flow (raw analysis), and the power output during each mode. Emissions are reported as grams per kilowatt hour (g/kW-hr).

(c) Requirements for emission test equipment and calibrating this equipment are found in subpart D of this part.

[59 FR 31335, June 17, 1994. Redesignated and amended at 63 FR 56995, 57015, Oct. 23, 1998]

§ 89.402 Definitions.

The definitions in subpart A of this part apply to this subpart. For terms not defined in this part, the definitions in 40 CFR part 86, subparts A, D, I, and N, apply to this subpart.

[63 FR 57015, Oct. 23, 1998]

§ 89.403 Symbols/abbreviations.

(a) The abbreviations in § 86.094–3 or § 89.3 of this chapter apply to this subpart.

(b) The abbreviations in Table 1 in appendix A to subpart D also apply to this subpart. Some abbreviations from § 89.3 have been included for the convenience of the reader.

(c) The symbols in Table 2 in appendix A to subpart D apply to this subpart.

[59 FR 31335, June 17, 1994. Redesignated at 63 FR 56996, Oct. 23, 1998]

§ 89.404 Test procedure overview.

(a) The test consists of prescribed sequences of engine operating conditions to be conducted on an engine dynamometer. The exhaust gases, generated raw or dilute during engine operation, are sampled for specific component analysis through the analytical train. The test is applicable to engines equipped with catalytic or direct-flame afterburners, induction system modifications, or other systems, or to uncontrolled engines.

(b) The test is designed to determine the brake-specific emissions of hydrocarbons, carbon monoxide, oxides of nitrogen, and particulate matter. For more information on particulate matter sampling see § 89.112(c). The test cycles consist of various steady-state operating modes that include different combinations of engine speeds and loads. These procedures require the determination of the concentration of each pollutant, exhaust volume, the fuel flow (raw analysis), and the power output during each mode. The measured values are weighted and used to calculate the grams of each pollutant emitted per kilowatt hour (g/kW-hr).

(c)(1) When an engine is tested for exhaust emissions, the complete engine shall be tested with all emission control devices installed and functioning.

(2) On air-cooled engines, the fan shall be installed.

(3) Additional accessories (for example, oil cooler, alternators, or air compressors) may be installed but such accessory loading will be considered parasitic in nature and observed power shall be used in the emission calculation.

(d) All emission control systems installed on or incorporated in the application must be functioning during all procedures in this subpart. In cases of component malfunction or failure, maintenance to correct component failure or malfunction must be authorized in accordance with § 86.094–25 of this chapter.

[59 FR 31335, June 17, 1994. Redesignated and amended at 63 FR 56995, 57015, Oct. 23, 1998]

§ 89.405 Recorded information.

(a) The information described in this section must be recorded, where applicable, for each test.

(b) *Engine description and specification.* A copy of the information specified in this paragraph must accompany each engine sent to the Administrator for compliance testing. The manufacturer need not record the information specified in this paragraph for each test if the information, with the exception of paragraphs (b)(3) and (b)(9) of this section, is included in the manufacturer's application for certification.

(1) Engine-system combination.

(2) Engine identification numbers.

(3) Number of hours of operation accumulated on engine.

(4) Rated maximum horsepower and torque.

(5) Maximum horsepower and torque speeds.

(6) Engine displacement.

(7) Governed speed.

(8) Idle rpm.

(9) Fuel consumption at maximum power and torque.

(10) Maximum air flow.

(11) Air inlet restriction.

(12) Exhaust pipe diameter(s).

(13) Maximum exhaust system backpressure.

(c) *Test data; general.*

(1) Engine-system combination.

(2) Engine identification number.

(3) Instrument operator.

(4) Engine operator.

(5) Number of hours of operation accumulated on the engine prior to beginning the warm-up portion of the test.

(6) Fuel identification.

(7) Date of most recent analytical assembly calibration.

(8) All pertinent instrument information such as tuning, gain, serial numbers, detector number, and calibration curve numbers. As long as this information is available for inspection by the Administrator, it may be summarized by system number or analyzer identification numbers.

(d) *Test data; pre-test.*

(1) Date and time of day.

(2) Test number.

(3) Intermediate speed and rated speed as defined in § 89.2 and maximum observed torque for these speeds.

(4) Recorder chart or equivalent. Identify the zero traces for each range used, and span traces for each range used.

(5) Air temperature after and pressure drop across the charge air cooler (if applicable) at maximum observed torque and rated speed.

(e) *Test data; modal.*

(1) Recorder chart or equivalent. Identify for each test mode the emission concentration traces and the associated analyzer range(s). Identify the start and finish of each test.

(2) Observed engine torque.

(3) Observed engine rpm.

(4) Record engine torque and engine rpm continuously during each mode with a chart recorder or equivalent recording device.

(5) Intake air flow (for raw mass flow sampling method only) and depression for each mode.

(6) Engine intake air temperature at the engine intake or turbocharger inlet for each mode.

(7) Mass fuel flow (for raw sampling) for each mode.

(8) Engine intake humidity.

(9) Coolant temperature outlet.

(10) Engine fuel inlet temperature at the pump inlet.

(f) *Test data; post-test.*

(1) Recorder chart or equivalent. Identify the zero traces for each range used and the span traces for each range used. Identify hangup check, if performed.

(2) Total number of hours of operation accumulated on the engine.

[59 FR 31335, June 17, 1994. Redesignated and amended at 63 FR 56995, 57015, Oct. 23, 1998]

§ 89.406 Pre-test procedures.

(a) Allow a minimum of 30 minutes warmup in the standby or operating mode prior to spanning the analyzers.

(b) Replace or clean the filter elements and then vacuum leak check the system per § 89.316(a). Allow the heated sample line, filters, and pumps to reach operating temperature.

(c) Perform the following system checks:

(1) Check the sample-line temperatures (see § 89.309(a)(4)(ii) and (a)(5)(i)(A)).

(2) Check that the system response time has been accounted for prior to sample collection data recording.

(3) A hang-up check is permitted, but is optional.

(d) Check analyzer zero and span at a minimum before and after each test. Further, check analyzer zero and span any time a range change is made or at the maximum demonstrated time span for stability for each analyzer used.

(e) Check system flow rates and pressures.

[59 FR 31335, June 17, 1994. Redesignated and amended at 63 FR 56995, 57015, Oct. 23, 1998]

§ 89.407 Engine dynamometer test run.

(a) Measure and record the temperature of the air supplied to the engine, the fuel temperature, the intake air humidity, and the observed barometric pressure during the sampling for each mode. The fuel temperature shall be

less than or equal to 43C during the sampling for each mode.

(b) The governor and fuel system shall have been adjusted to provide engine performance at the levels reported in the application for certification required under § 89.115.

(c) The following steps are taken for each test:

(1) Install instrumentation and sample probes as required.

(2) Perform the pre-test procedure as specified in § 89.406.

(3) Read and record the general test data as specified in § 89.405(c).

(4) Start cooling system.

(5) Precondition (warm up) the engine in the following manner:

(i) For variable-speed engines:

(A) Operate the engine at idle for 2 to 3 minutes;

(B) Operate the engine at approximately 50 percent power at the peak torque speed for 5 to 7 minutes;

(C) Operate the engine at rated speed and maximum horsepower for 25 to 30 minutes;

(ii) For constant-speed engines:

(A) Operate the engine at minimum load for 2 to 3 minutes;

(B) Operate the engine at 50 percent load for 5 to 7 minutes;

(C) Operate the engine at maximum load for 25 to 30 minutes;

(iii) Optional. It is permitted to precondition the engine at rated speed and maximum horsepower until the oil and water temperatures are stabilized. The temperatures are defined as stabilized if they are maintained within 2 percent of point on an absolute basis for 2 minutes. The engine must be operated a minimum of 10 minutes for this option. This optional procedure may be substituted for the procedure in paragraph (c)(5)(i)or (c)(5)(ii) of this section;

(iv) Optional. If the engine has been operating on service accumulation for a minimum of 40 minutes, the service accumulation may be substituted for the procedure in paragraphs (c)(5)(i) through (iii) of this section.

(6) Read and record all pre-test data specified in § 89.405(d).

(7) Start the test cycle (see § 89.410) within 20 minutes of the end of the warmup. (See paragraph (c)(13) of this section.) A mode begins when the speed and load requirements are stabilized to within the requirements of § 89.410(b). A mode ends when valid emission sampling for that mode ends. For a mode to be valid, the speed and load requirements must be maintained continuously during the mode. Sampling in the mode may be repeated until a valid sample is obtained as long the speed and torque requirements are met.

(8) Calculate the torque for any mode with operation at rated speed.

(9) During the first mode with intermediate speed operation, if applicable, calculate the torque corresponding to 75 and 50 percent of the maximum observed torque for the intermediate speed.

(10) Record all modal data specified in § 89.405(e) during a minimum of the last 60 seconds of each mode.

(11) Record the analyzer(s) response to the exhaust gas during the a minimum of the last 60 seconds of each mode.

(12) Test modes may be repeated, as long as the engine is preconditioned by running the previous mode. In the case of the first mode of any cycle, precondition according to paragraph (c)(5) of this section.

(13) If a delay of more than 20 minutes, but less than 4 hours, occurs between the end of one mode and the beginning of another mode, precondition the engine by running the previous mode. If the delay exceeds 4 hours, the test shall include preconditioning (begin at paragraph (c)(2) of this section).

(14) The speed and load points for each mode are listed in Tables 1 through 4 of Appendix B of this subpart. The engine speed and load shall be maintained as specified in § 89.410(b).

(15) If at any time during a test mode, the test equipment malfunctions or the specifications in paragraph (c)(14) of this section are not met, the test mode is void and may be aborted. The test mode may be restarted by preconditioning with the previous mode.

(16) Fuel flow and air flow during the idle load condition may be determined just prior to or immediately following the dynamometer sequence, if longer times are required for accurate measurements.

(d) *Exhaust gas measurements.* (1) Measure HC, CO, CO_2, and NO_X concentration in the exhaust sample.

(2) Each analyzer range that may be used during a test mode must have the zero and span responses recorded prior to the execution of the test. Only the zero and span for the range(s) used to measure the emissions during the test are required to be recorded after the completion of the test.

(3) It is permissible to change filter elements between test modes.

(4) A leak check is permitted between test segments.

(5) A hangup check is permitted between test segments.

(6) If, during the emission measurement portion of a test segment, the value of the gauges downstream of the NDIR analyzer(s) *G3* or *G4* (see Figure 1 in appendix B to subpart D) differs by more than ±0.5 kPa from the pretest value, the test segment is void.

[59 FR 31335, June 17, 1994. Redesignated and amended at 63 FR 56996, 57015, Oct. 23, 1998]

§ 89.408 Post-test procedures.

(a) A hangup check is recommended at the completion of the last test mode using the following procedure:

(1) Within 30 seconds introduce a zero-grade gas or room air into the sample probe or valve *V2* (see Figure 1 in appendix B to subpart D) to check the ''hangup zero'' response. Simultaneously start a time measurement.

(2) Select the lowest HC range used during the test.

(3) Within four minutes of beginning the time measurement in paragraph (a)(1) of this section, the difference between the span-zero response and the hangup zero response shall not be greater than 5.0 percent of full scale or 10 ppmC whichever is greater.

(b) Begin the analyzer span checks within 6 minutes after the completion of the last mode in the test. Record for each analyzer the zero and span response

(c) If during the test, the filter element(s) were replaced or cleaned, a of § 89.316(a), the test is void.

(d) Record the post-test data specified in § 89.405(f).

(e) For a valid test, the zero and span checks performed before and after each test for each analyzer must meet the following requirements:

(1) The span drift (defined as the change in the difference between the zero response and the span response) must not exceed 3 percent of full-scale chart deflection for each range used.

(2) The zero response drift must not exceed 3 percent of full-scale chart deflection.

[59 FR 31335, June 17, 1994. Redesignated and amended at 63 FR 56996, 57016, Oct. 23, 1998]

§ 89.409 Data logging.

(a) A computer or any other automatic data processing device(s) may be used as long as the system meets the requirements of this subpart.

(b) Determine from the data collection records the analyzer responses corresponding to the end of each mode.

(c) Record data at a minimum of once every 5 seconds.

(d) Determine the final value for CO_2, CO, HC, and NO_X concentrations by averaging the concentration of each point taken during the sample period for each mode.

(e) For purposes of this section, calibration data includes calibration curves, linearity curves, span-gas responses, and zero-gas responses.

[59 FR 31335, June 17, 1994. Redesignated at 63 FR 56996, Oct. 23, 1998]

§ 89.410 Engine test cycle.

(a) Emissions shall be measured using one of the test cycles specified in Tables 1 through 4 of Appendix B of this subpart, subject to the provisions of paragraphs (a)(1) through (a)(4) of this section. These cycles shall be used to test engines on a dynamometer.

(1) The 8-mode test cycle described in Table 1 of Appendix B of this subpart shall be used for all engines, except constant speed engines, engines rated under 19 kW, and propulsion marine diesel engines.

(2) The 5-mode test cycle described in Table 2 of Appendix B of this subpart shall be used for constant-speed engines as defined in § 89.2. Any engine certified under this test cycle must meet the labeling requirements of § 89.110(b)(11).

(3) The 6-mode test cycle described in Table 3 of Appendix B of this subpart

shall be used for variable speed engines rated under 19 kW.

(4) Notwithstanding the provisions of paragraphs (a)(1) through (a)(3) of this section, the 4-mode test cycle described in Table 4 of Appendix B of this subpart shall be used for propulsion marine diesel engines.

(5) Notwithstanding the provisions of paragraphs (a)(1) through (a)(4) of this section:

(i) Manufacturers may use the 8-mode test cycle described in Table 1 of Appendix B of this subpart for:

(A) Constant speed engines, or variable speed engines rated under 19 kW; or

(B) Propulsion marine diesel engines, provided the propulsion marine diesel engines are certified in an engine family that includes primarily non-marine diesel engines, and the manufacturer obtains advance approval from the Administrator.

(ii) The Administrator may use the 8-mode test cycle specified in Table 1 of Appendix B of this subpart during testing of any engine which was certified based on emission data collected from that test cycle.

(b) During each non-idle mode, hold the specified load to within 2 percent of the engine maximum value and speed to within ±2 percent of point. During each idle mode, speed must be held within the manufacturer's specifications for the engine, and the throttle must be in the fully closed position and torque must not exceed 5 percent of the peak torque value of mode 5.

(c) For any mode except those involving either idle or full-load operation, if the operating conditions specified in paragraph (b) of this section cannot be maintained, the Administrator may authorize deviations from the specified load conditions. Such deviations shall not exceed 10 percent of the maximum torque at the test speed. The minimum deviations above and below the specified load necessary for stable operation shall be determined by the manufacturer and approved by the Administrator prior to the test run.

(d) Power generated during the idle mode may not be included in the calculation of emission results.

[59 FR 31335, June 17, 1994. Redesignated and amended at 63 FR 56996, 57016, Oct. 23, 1998]

§ 89.411 Exhaust sample procedure—gaseous components.

(a) *Automatic data collection equipment requirements.* The analyzer response may be read by automatic data collection (ADC) equipment such as computers, data loggers, and so forth. If ADC equipment is used, the following is required:

(1) For bag sample analysis, the analyzer response must be stable at greater than 99 percent of the final reading for the dilute exhaust sample bag. A single value representing the average chart deflection over a 10-second stabilized period shall be stored.

(2) For continuous analysis systems, a single value representing the average integrated concentration over a cycle shall be stored.

(3) The chart deflections or average integrated concentrations required in paragraphs (a)(1) and (a)(2) of this section may be stored on long-term computer storage devices such as computer tapes, storage discs, punch cards, and so forth, or they may be printed in a listing for storage. In either case a chart recorder is not required and records from a chart recorder, if they exist, need not be stored.

(4) If ADC equipment is used to interpret analyzer values, the ADC equipment is subject to the calibration specifications of the analyzer as if the ADC equipment is part of analyzer system.

(b) Data records from any one or a combination of analyzers may be stored as chart recorder records.

(c) *Bag sample analysis.* For bag sample analysis perform the following sequence:

(1) Warm up and stabilize the analyzers; clean and/or replace filter elements, conditioning columns (if used), and so forth, as necessary.

(2) Obtain a stable zero reading.

(3) Zero and span the analyzers with zero and span gases. The span gases must have concentrations between 75 and 100 percent of full-scale chart deflection. The flow rates and system pressures during spanning shall be approximately the same as those encountered during sampling. A sample bag may be used to identify the required analyzer range.

(4) Recheck zero response. If this zero response differs from the zero response

recorded in paragraph (c)(3) of this section by more than 1 percent of full scale, then paragraphs (c)(2), (c)(3), and (c)(4) of this section must be repeated.

(5) If a chart recorder is used, identify and record the most recent zero and span response as the pre-analysis values.

(6) If ADC equipment is used, electronically record the most recent zero and span response as the pre-analysis values.

(7) Measure HC, CO, CO_2, and NO_X background concentrations in the sample bag(s) with approximately the same flow rates and pressures used in paragraph (c)(3) of this section. (Constituents measured continuously do not require bag analysis.)

(8) A post-analysis zero and span check of each range must be performed and the values recorded. The number of events that may occur between the pre- and post-analysis checks is not specified. However, the difference between pre-analysis zero and span values (recorded in paragraph (c)(5) or (c)(6) of this section) versus those recorded for the post-analysis check may not exceed the zero drift limit or the span drift limit of 2 percent of full-scale chart deflection for any range used. Otherwise the test is void.

(d) *Continuous sample analysis.* For continuous sample analysis perform the following sequence:

(1) Warm up and stabilize the analyzers; clean and/or replace filter elements, conditioning columns (if used), and so forth, as necessary.

(2) Leak check portions of the sampling system that operate at negative gauge pressures when sampling, and allow heated sample lines, filters, pumps, and so forth to stabilize at operating temperature.

(3) Optional: Perform a hangup check for the HFID sampling system:

(i) Zero the analyzer using zero air introduced at the analyzer port.

(ii) Flow zero air through the overflow sampling system. Check the analyzer response.

(iii) If the overflow zero response exceeds the analyzer zero response by 2 percent or more of the HFID full-scale deflection, hangup is indicated and corrective action must be taken.

(iv) The complete system hangup check specified in paragraph (e) of this section is recommended as a periodic check.

(4) Obtain a stable zero reading.

(5) Zero and span each range to be used on each analyzer operated prior to the beginning of the test cycle. The span gases shall have a concentration between 75 and 100 percent of full-scale chart deflection. The flow rates and system pressures shall be approximately the same as those encountered during sampling. The HFID analyzer shall be zeroed and spanned either through the overflow sampling system or through the analyzer port.

(6) Re-check zero response. If this zero response differs from the zero response recorded in paragraph (d)(5) of this section by more than 1 percent of full scale, then paragraphs (d)(4), (d)(5), and (d)(6) of this section must be repeated.

(7) If a chart recorder is used, identify and record the most recent zero and span response as the pre-analysis values.

(8) If ADC equipment is used, electronically record the most recent zero and span response as the pre-analysis values.

(9) Collect background HC, CO, CO_2, and NO_X in a sample bag (for dilute exhaust sampling only, see § 89.420).

(10) Perform a post-analysis zero and span check for each range used at the conditions specified in paragraph (d)(5) of this section. Record these responses as the post-analysis values.

(11) Neither the zero drift nor the span drift between the pre-analysis and post-analysis checks on any range used may exceed 3 percent for HC, or 2 percent for NO_X, CO, and CO_2, of full scale chart deflection, or the test is void. (If the HC drift is greater than 3 percent of full-scale chart deflection, hydrocarbon hangup is likely.)

(12) Determine background levels of NO_X, CO, or CO_2 (for dilute exhaust sampling only) by the bag sample technique outlined in paragraph (c) of this section.

(e) *Hydrocarbon hangup.* If HC hangup is indicated, the following sequence may be performed:

(1) Fill a clean sample bag with background air.

(2) Zero and span the HFID at the analyzer ports.

(3) Analyze the background air sample bag through the analyzer ports.

(4) Analyze the background air through the entire sample probe system.

(5) If the difference between the readings obtained greater than or equal to 2 percent of full scale deflection, clean the sample probe and the sample line.

(6) Reassemble the sample system, heat to specified temperature, and repeat the procedure in paragraphs (e)(1) through (e)(6) of this section.

[59 FR 31335, June 17, 1994. Redesignated and amended at 63 FR 56996, 57016, Oct. 23, 1998]

§ 89.412 Raw gaseous exhaust sampling and analytical system description.

(a) *Schematic drawing*. An example of a sampling and analytical system which may be used for testing under this subpart is shown in Figure 1 in appendix B to subpart D. All components or parts of components that are wetted by the sample or corrosive calibration gases shall be either chemically cleaned stainless steel or inert material, for example, polytetrafluoroethylene resin. The use of ''gauge savers'' or ''protectors'' with nonreactive diaphragms to reduce dead volumes is permitted.

(b) *Sample probe*. (1) The sample probe shall be a straight, closed-end, stainless steel, multi-hole probe. The inside diameter shall not be greater than the inside diameter of the sample line plus 0.03 cm. The wall thickness of the probe shall not be greater than 0.10 cm. The fitting that attaches the probe to the exhaust pipe shall be as small as practical in order to minimize heat loss from the probe.

(2) The probe shall have a minimum of three holes. The spacing of the radial planes for each hole in the probe must be such that they cover approximately equal cross-sectional areas of the exhaust duct. See Figure 1 in appendix A to this subpart. The angular spacing of the holes must be approximately equal. The angular spacing of any two holes in one plane may not be 180° ±20° (that is, section view C-C of Figure 1 in appendix A to this subpart). The holes should be sized such that each has approximately the same flow. If only three holes are used, they may not all be in the same radial plane.

(3) The probe shall extend radially across the exhaust duct. The probe must pass through the approximate center and must extend across at least 80 percent of the diameter of the duct.

(c) *Sample transfer line*. (1) The maximum inside diameter of the sample line shall not exceed 1.32 cm.

(2) If valve *V2* is used, the sample probe must connect directly to valve *V2*. The location of optional valve *V2* may not be greater than 1.22 m from the exhaust duct.

(3) The location of optional valve V16 may not be greater than 61 cm from the sample pump.

(d) *Venting*. All vents, including analyzer vents, bypass flow, and pressure relief vents of regulators, should be vented in such a manner to avoid endangering personnel in the immediate area.

(e) Any variation from the specifications in this subpart including performance specifications and emission detection methods may be used only with prior approval by the Administrator.

(f) Additional components, such as instruments, valves, solenoids, pumps, switches, and so forth, may be employed to provide additional information and coordinate the functions of the component systems.

(g) The following requirements must be incorporated in each system used for raw testing under this subpart.

(1) [Reserved]

(2) The sample transport system from the engine exhaust pipe to the HC analyzer and the NO_X analyzer must be heated as indicated in Figure 1 in appendix B of subpart D.

[59 FR 31335, June 17, 1994. Redesignated and amended at 63 FR 56996, 57016, Oct. 23, 1998]

§ 89.413 Raw sampling procedures.

Follow these procedures when sampling for gaseous emissions.

(a) The gaseous emission sampling probe must be installed at least 0.5 m or 3 times the diameter of the exhaust pipe—whichever is the larger—upstream of the exit of the exhaust gas system.

(b) In the case of a multi-cylinder engine with a branched exhaust manifold, the inlet of the probe shall be located sufficiently far downstream so as to ensure that the sample is representative of the average exhaust emissions from all cylinders.

(c) In multi-cylinder engines having distinct groups of manifolds, such as in a ''Vee'' engine configuration, it is permissible to:

(1) Sample after all exhaust pipes have been connected together into a single exhaust pipe.

(2) For each mode, sample from each exhaust pipe and average the gaseous concentrations to determine a value for each mode.

(3) Sample from all exhaust pipes simultaneously with the sample lines connected to a common manifold prior to the analyzer. It must be demonstrated that the flow rate through each individual sample line is ±4 percent of the average flow rate through all the sample lines.

(4) Use another method, if it has been approved in advance by the Administrator.

(d) All gaseous heated sampling lines shall be fitted with a heated filter to extract solid particles from the flow of gas required for analysis. The sample line for CO and CO_2 analysis may be heated or unheated.

[59 FR 31335, June 17, 1994. Redesignated and amended at 63 FR 56996, 57016, Oct. 23, 1998]

§ 89.414 Air flow measurement specifications.

(a) The air flow measurement method used must have a range large enough to accurately measure the air flow over the engine operating range during the test. Overall measurement accuracy must be ±2 percent of the maximum engine value for all modes. The Administrator must be advised of the method used prior to testing.

(b) When an engine system incorporates devices that affect the air flow measurement (such as air bleeds) that result in understated exhaust emission results, corrections to the exhaust emission results shall be made to account for such effects.

[59 FR 31335, June 17, 1994. Redesignated and amended at 63 FR 56996, 57017, Oct. 23, 1998]

§ 89.415 Fuel flow measurement specifications.

The fuel flow rate measurement instrument must have a minimum accuracy of 2 percent of the engine maximum fuel flow rate. The controlling parameters are the elapsed time measurement of the event and the weight or volume measurement.

[63 FR 57017, Oct. 23, 1998]

§ 89.416 Raw exhaust gas flow.

The exhaust gas flow shall be determined by one of the methods described in this section and conform to the tolerances of Table 3 in appendix A to subpart D:

(a) Measurement of the air flow and the fuel flow by suitable metering systems (for details see SAE J244. This procedure has been incorporated by reference. See § 89.6.) and calculation of the exhaust gas flow as follows:

$G_{EXHW} = G_{AIRW} + G_{FUEL}$ (for wet exhaust mass)

or

$V_{EXHD} = V_{AIRD} + (-.767) \times G_{FUEL}$ (for dry exhaust volume)

or

$V_{EXHW} = V_{AIRW} + .749 \times G_{FUEL}$ (for wet exhaust volume)

(b) Exhaust mass calculation from fuel consumption (see § 89.415) and exhaust gas concentrations using the method found in § 89.418.

[59 FR 31335, June 17, 1994. Redesignated at 63 FR 56996, Oct. 23, 1998]

§ 89.417 Data evaluation for gaseous emissions.

For the evaluation of the gaseous emission recording, the last 60 seconds of each mode are recorded, and the average values for HC, CO, CO_2, and NO_X during each mode are determined from the average concentration readings determined from the corresponding calibration data.

[59 FR 31335, June 17, 1994. Redesignated at 63 FR 56996, Oct. 23, 1998]

§ 89.418 Raw emission sampling calculations.

(a) The final test results shall be derived through the steps described in this section.

(b) The exhaust gas flow rate G_{EXHW} and V_{EXHW} shall be determined for each mode.

(1) For measurements using the mass flow method, see § 89.416(a).

(2) For measurements using the fuel consumption and exhaust gas concentrations method, use the following equations:

$$G_{EXHW} = G_{fuel} + G_{aird}\left(1 + \left(\frac{H}{1000}\right)\right)$$

Where:

$$G_{aird} = \frac{G_{fuel}}{(fla)} = \frac{\text{Mass Fuel Measured}}{G_{airw} \times \left(1 - \frac{H}{1000}\right)}$$

$$(fla) = \frac{4.77\,(1+\alpha/4)\,(fla)_{stoich}}{\frac{1}{X} - \left(\frac{DCO}{2\,X\,(10)^6}\right) - \left(\frac{DHC}{X\,(10)^6}\right) + \frac{\alpha}{4}\left(1 - \frac{DHC}{X\,(10)^6}\right) - \frac{0.75\,\alpha}{\left(\frac{K}{\left(\frac{DCO}{X\,(10)^6}\right)}\right) + \left(\frac{(1-K)}{\left(1 - \frac{DHC}{X\,(10)^6}\right)}\right)}}$$

$$(fla)_{Stoich} = \frac{M_c + \alpha M_H}{138.18\,(1+\alpha/4)}$$

$$X = \frac{DCO_2}{10^2} + \frac{DCO}{10^6} + \frac{DHC}{10^6}$$

K = 3.5

(3) Humidity values may be calculated from either one of the following equations:

$$H = \frac{6.22 \times R_a \times p_d}{p_R - \left(p_d \times R_a \times 10^{-2}\right)}$$

or

$$H = \frac{622 \times P_v}{(P_B - P_v)}$$

(c) When applying G_{EXHW}, the measured ''dry'' concentration shall be corrected to a wet basis, if not already measured on a wet basis. This section is applicable only for measurements made on raw exhaust gas. Correction to a wet basis shall be according to the following formula:

$$Conc_{WET} = K_w \times Conc_{DRY}$$

Where:

K_W is determined according to the equations in paragraph (c)(1) or (c)(2) of this section.

(1) For measurements using the mass flow method (see § 89.416(a)):

$$K_W = \left[1 - F_{FH} \times \frac{G_{fuel}}{G_{aird}}\right] - K_{W1}$$

$$F_{FH} = ALF \times 0.1448 \times \frac{1}{1 + \left(\frac{G_{fuel}}{G_{aird}}\right)} \text{ for diesel fuel only}$$

$$ALF = \text{Hydrogen mass percentage of fuel} = \frac{1.008 \times \alpha}{12.01 + 1.008 \times \alpha} \times 100 = 13.12 \text{ for } CH_{1.8}\text{fuel}$$

α = H/C mole ratio of the fuel.

(2) For measurements using the fuel consumption and exhaust gas concentrations method (see § 89.416(b)):

$$K_W = \frac{1}{1 + 1.8 \times 0.005 \times \left[\frac{DCO}{10^4} = DCO_2\right]} - K_{W1}$$

Where:

$$K_{W1} = \frac{1.608 \times H}{1000 + 1.608 \times H}$$

(d) As the NO_X emission depends on intake air conditions, the NO_X concentration shall be corrected for intake air temperature and humidity with the factor K_h given in the following formula. For engines operating on alternative combustion cycles, other correction formulas may be used if they can be justified or validated. The formula follows:

$$K_H = \frac{1}{1 - 0.0182(H - 10.71)}$$

(e) The pollutant mass flow for each mode shall be calculated as follows:

Gas mass = $u \times$ Gas conc. $\times G_{EXHW}$
Gas mass = $v \times$ Gas conc. $\times V_{EXHD}$
Gas mass = $w \times$ Gas conc. $\times V_{EXHW}$

The coefficients u (wet), v (dry), and w (wet) are to be used according to the following table:

Gas	u	v	w	conc.
NO_X	0.001587	0.00205	0.00205	ppm.
CO	0.000966	0.00125	0.00125	ppm.
HC	0.000478		0.000618	ppm.
CO_2	15.19	19.64	19.64	percent.

NOTE: The given coefficients u, v, and w are calculated for 273.15 °K (0 °C) and 101.3 kPa. In cases where the reference conditions vary from those stated, an error may occur in the calculations.

(f) The following equations may be used to calculate the coefficients u, v, and w in paragraph (e) of this section for other conditions of temperature and pressure:

(1) For the calculation of u, v, and w for NO_X (as NO_2), CO, HC (in paragraph (e) of this section as $CH_{1.80}$), CO_2, and O_2:

Where:

$w = 4.4615.10^{-5} \times M$ if conc. in ppm
$w = 4.4615.10^{-1} \times M$ if conc. in percent
$v = w$
$u = w/\rho_{Air}$
M = Molecular weight
ρ_{Air} = Density of dry air at 273.15 °K (0 °C), 101.3 kPa = 1.293 kg/m³

(2) For real gases at 273.15 °K (0 °C) and 101.3 kPa: For the calculation of u, v, and w

$w = \text{gas} \times 10^{-6}$ if conc. in ppm
$v = w$
$u = w/p_{Air}$
p_{Gas} = Density of measured gas at 0 °C, 101.3 kPas in g/m³

(3) General formulas for the calculation of concentrations at temperature (designated as T) and pressure (designated as p):

—for ideal gases

$$\text{conc}\frac{g}{m_3} = \frac{M}{M_v} \times \frac{T_o}{T_o + T} \times \frac{P}{P_o} \quad \frac{\text{Conc(ppm)}}{10^6}$$

—for real gases

$$\text{conc}\frac{g}{m_3} = \rho_{Gas} \times \frac{T_o}{T_o + T} \times \frac{P}{P_o} \quad \frac{\text{Conc(ppm)}}{10^6}$$

with:

1% = 10^4 ppm
M = Molecular weight in g/Mo1
M_v = Molecular Volume = 22.414×10^{-3} m³/Mol for ideal gases
T = reference temperature 273.15 K
p = reference pressure 101.3 kPa
T = Temperature in °C
p = pressure in kPa
p_{Gas} = Density of the measured gas at 0 °C, 101.3 kPa
Conc. = Gas concentration

(g)(1) The emission shall be calculated for all individual components

in the following way where power at idle is equal to zero:

$$\text{individualgas} = \frac{\sum_{i=1}^{i=n}\left(g_i \times WF_i\right)}{\sum_{i=1}^{i=n}\left(P_i \times WF_i\right)}$$

(2) The weighting factors and the number of modes (n) used in the calculation in paragraph (g)(1) of this section are according to § 89.410.

[59 FR 31335, June 17, 1994. Redesignated and amended at 63 FR 56996, 57017, Oct. 23, 1998]

§ 89.419 Dilute gaseous exhaust sampling and analytical system description.

(a) *General.* The exhaust gas sampling system described in this section is designed to measure the true mass of gaseous emissions in the exhaust of petroleum-fueled nonroad compression-ignition engines. This system utilizes the CVS concept (described in § 86.1310–90 of this chapter) of measuring mass emissions of HC, CO, and CO_2. A continuously integrated system is required for HC and NO_X measurement and is allowed for all CO and CO_2 measurements. The mass of gaseous emissions is determined from the sample concentration and total flow over the test period. As an option, the measurement of total fuel mass consumed over a cycle may be substituted for the exhaust measurement of CO_2. General requirements are as follows:

(1) This sampling system requires the use of a PDP–CVS and a heat exchanger or a CFV–CVS with either a heat exchanger or electronic flow compensation. Figure 2 in appendix A to this subpart is a schematic drawing of the PDP–CVS system. Figure 3 in appendix A to this subpart is a schematic drawing of the CFV–CVS system.

(2) The HC analytical system for petroleum-fueled compression-ignition engines requires a heated flame ionization detector (HFID) and heated sample system (191 ±11 °C).

(i) The HFID sample must be taken directly from the diluted exhaust stream through a heated probe and integrated continuously over the test cycle. Unless compensation for varying flow is made, the HFID must be used with a constant flow system to ensure a representative sample.

(ii) The heated probe shall be located in the primary dilution tunnel and far enough downstream of the mixing chamber to ensure a uniform sample distribution across the CVS duct at the point of sampling.

(3) The CO and CO_2 analytical system requires:

(i) Bag sampling (see § 86.1309–90 of this chapter) and analytical capabilities (see § 86.1311–90 of this chapter), as shown in Figure 2 and Figure 3 in appendix A to this subpart; or

(ii) Continuously integrated measurement of diluted CO and CO_2 meeting the minimum requirements and technical specifications contained in paragraph (b)(4) of this section. Unless compensation for varying flow is made, a constant flow system must be used to ensure a representative sample.

(4) The NO_X analytical system requires a continuously integrated measurement of diluted NO_X meeting the minimum requirements and technical specifications contained in paragraph (b)(4) of this section. Unless compensation for varying flow is made, a constant flow system must be used to ensure a representative sample.

(5) Since various configurations can produce equivalent results, exact conformance with these drawings is not required. Additional components such as instruments, valves, solenoids, pumps, and switches may be used to provide additional information and coordinate the functions of the component systems. Other components, such as snubbers, which are not needed to maintain

accuracy on some systems, may be excluded if their exclusion is based upon good engineering judgment.

(6) Other sampling and/or analytical systems may be used if shown to yield equivalent results and if approved in advance by the Administrator.

(b) *Component description.* The components necessary for exhaust sampling shall meet the following requirements:

(1) *Exhaust dilution system.* The PDP–CVS shall conform to all of the requirements listed for the exhaust gas PDP–CVS in § 86.1309–90(b) of this chapter. The CFV–CVS shall conform to all of the requirements listed for the exhaust gas CFV–CVS in § 86.1309–90(c) of this chapter. In addition, the CVS must conform to the following requirements:

(i) The flow capacity of the CVS must be sufficient to maintain the diluted exhaust stream at or below the temperature required for the measurement of hydrocarbon emissions noted in the following paragraph and to prevent condensation of water at any point in the dilution tunnel.

(ii) The flow capacity of the CVS must be sufficient to maintain the diluted exhaust stream in the primary dilution tunnel at a temperature of 191 °C or less at the sampling zone for hydrocarbon measurement and as required to prevent condensation at any point in the dilution tunnel. Gaseous emission samples may be taken directly from this sampling point.

(iii) For the CFV–CVS, either a heat exchanger or electronic flow compensation is required (see Figure 3 in appendix A to this subpart).

(iv) For the CFV–CVS when a heat exchanger is used, the gas mixture temperature, measured at a point immediately ahead of the critical flow venturi, shall be within ±11 °C) of the average operating temperature observed during the test with the simultaneous requirement that condensation does not occur. The temperature measuring system (sensors and readout) shall have an accuracy and precision of ±2 °C. For systems utilizing a flow compensator to maintain proportional flow, the requirement for maintaining constant temperature is not necessary.

(v) The primary dilution air shall have a temperature of 25 °C ±5 °C.

(2) *Continuous HC measurement system.* (i) The continuous HC sample system (as shown in Figure 2 or 3 in appendix A to this subpart) uses an ''overflow'' zero and span system. In this type of system, excess zero or span gas spills out of the probe when zero and span checks of the analyzer are made. The ''overflow'' system may also be used to calibrate the HC analyzer per § 86.1321–90(b) of this chapter, although this is not required.

(ii) No other analyzers may draw a sample from the continuous HC sample probe, line or system, unless a common sample pump is used for all analyzers and the sample line system design reflects good engineering practice.

(iii) The overflow gas flow rates into the sample line shall be at least 105 percent of the sample system flow rate.

(iv) The overflow gases shall enter the heated sample line as close as practical to the outside surface of the CVS duct or dilution tunnel.

(v) The continuous HC sampling system shall consist of a probe (which must raise the sample to the specified temperature) and, where used, a sample transfer system (which must maintain the specified temperature). The continuous hydrocarbon sampling system (exclusive of the probe) shall:

(A) Maintain a wall temperature of 191 °C ±11 °C as measured at every separately controlled heated component (that is, filters, heated line sections), using permanent thermocouples located at each of the separate components.

(B) Have a wall temperature of 191 °C ±11 °C over its entire length. The temperature of the system shall be demonstrated by profiling the thermal characteristics of the system where possible at initial installation and after any major maintenance performed on the system. The profiling shall be accomplished using the insertion thermocouple probing technique. The system temperature will be monitored continuously during testing at the locations and temperature described in § 86.1310–90(b)(3)(v).

(C) Maintain a gas temperature of 191 °C ±11 °C immediately before the heated filter and HFID. These gas temperatures will be determined by a temperature sensor located immediately upstream of each component.

(vi) The continuous hydrocarbon sampling probe shall:

(A) Be defined as the first 25 cm to 76 cm of the continuous hydrocarbon sampling system.

(B) Have a 0.48 cm minimum inside diameter.

(C) Be installed in the primary dilution tunnel at a point where the dilution air and exhaust are well mixed (that is, approximately 10 tunnel diameters downstream of the point where the exhaust enters the dilution tunnel).

(D) Be sufficiently distant (radially) from other probes and the tunnel wall so as to be free from the influence of any wakes or eddies.

(E) Increase the gas stream temperature to 191 °C ±11 °C at the exit of the probe. The ability of the probe to accomplish this shall be demonstrated using the insertion thermocouple technique at initial installation and after any major maintenance. Compliance with the temperature specification shall be demonstrated by continuously recording during each test the temperature of either the gas stream or the wall of the sample probe at its terminus.

(vii) The response time of the continuous measurement system shall be no greater than:

(A) 1.5 seconds from an instantaneous step change at the port entrance to the analyzer to within 90 percent of the step change.

(B) 20 seconds from an instantaneous step change at the entrance to the sample probe or overflow span gas port to within 90 percent of the step change. Analysis system response time shall be coordinated with CVS flow fluctuations and sampling time/test cycle offsets if necessary.

(C) For the purpose of verification of response times, the step change shall be at least 60 percent of full-scale chart deflection.

(3) *Primary dilution tunnel.* (i) The primary dilution tunnel shall be:

(A) Small enough in diameter to cause turbulent flow (Reynolds Number greater than 4000) and of sufficient length to cause complete mixing of the exhaust and dilution air;

(B) At least 46 cm in diameter; (engines below 110 kW may use a dilution tunnel that is 20 cm in diameter or larger)

(C) Constructed of electrically conductive material which does not react with the exhaust components; and

(D) Electrically grounded.

(ii) The temperature of the diluted exhaust stream inside of the primary dilution tunnel shall be sufficient to prevent water condensation.

(iii) The engine exhaust shall be directed downstream at the point where it is introduced into the primary dilution tunnel.

(4) *Continuously integrated* NO_X, CO, and CO_2 *measurement systems.* (i) The sample probe shall:

(A) Be in the same plane as the continuous HC probe, but shall be sufficiently distant (radially) from other probes and the tunnel wall so as to be free from the influences of any wakes or eddies.

(B) Heated and insulated over the entire length, to prevent water condensation, to a minimum temperature of 55 °C. Sample gas temperature immediately before the first filter in the system shall be at least 55 °C.

(ii) The continuous NO_X, CO, or CO_2 sampling and analysis system shall conform to the specifications of part 86, subpart D of this chapter with the following exceptions and revisions:

(A) The system components required to be heated by part 86, subpart D of this chapter need only be heated to prevent water condensation, the minimum component temperature shall be 55 °C.

(B) The system response shall be no greater than 20 seconds. Analysis system response time shall be coordinated with CVS flow fluctuations and sampling time/test cycle offsets, if necessary.

(C) Alternative NO_X measurement techniques outlined in § 86.346–79 of this chapter are not permitted for NO_X measurement in this subpart.

(D) All analytical gases must conform to the specifications of § 89.312.

(E) Any range on a linear analyzer below 155 ppm must have and use a

calibration curve conforming to § 89.310.

(iii) The chart deflections or voltage output of analyzers with non-linear calibration curves shall be converted to concentration values by the calibration curve(s) specified in § 89.323 before flow correction (if used) and subsequent integration takes place.

[59 FR 31335, June 17, 1994. Redesignated at 63 FR 56996, Oct. 23, 1998]

§ 89.420 Background sample.

(a) Background samples are produced by continuously drawing a sample of dilution air during the exhaust collection phase of each test cycle mode.

(1) Individual background samples may be produced and analyzed for each mode. Hence, a unique background value will be used for the emission calculations for each mode.

(2) Alternatively, a single background sample may be produced by drawing a sample during the collection phase of each of the test cycle modes. Hence, a single cumulative background value will be used for the emission calculations for each mode.

(b) For analysis of the individual sample described in paragraph (a)(1) of this section, a single value representing the average chart deflection over a 10-second stabilized period is stored. All readings taken during the 10-second interval must be stable at the final value to within ±1 percent of full scale.

(c) Measure HC, CO, CO_2, and NO_X exhaust and background concentrations in the sample bag(s) with approximately the same flow rates and pressures used during calibration.

[59 FR 31335, June 17, 1994. Redesignated and amended at 63 FR 56996, 57018, Oct. 23, 1998]

§ 89.421 Exhaust gas analytical system; CVS bag sample.

(a) *Schematic drawings.* Figure 4 in appendix A to this subpart is a schematic drawing of the exhaust gas analytical system used for analyzing CVS bag samples from compression- ignition engines. Since various configurations can produce accurate results, exact conformance with the drawing is not required. Additional components such as instruments, valves, solenoids, pumps and switches may be used to provide additional information and coordinate the functions of the component systems. Other components such as snubbers, which are not needed to maintain accuracy in some systems, may be excluded if their exclusion is based upon good engineering judgment.

(b) *Major component description.* The analytical system, Figure 4 in appendix A to this subpart, consists of a flame ionization detector (FID) (heated for petroleum-fueled compression-ignition engines to 191 °C ±6 °C) for the measurement of hydrocarbons, nondispersive infrared analyzers (NDIR) for the measurement of carbon monoxide and carbon dioxide, and a chemiluminescence detector (CLD) (or HCLD) for the measurement of oxides of nitrogen. The exhaust gas analytical system shall conform to the following requirements:

(1) The CLD (or HCLD) requires that the nitrogen dioxide present in the sample be converted to nitric oxide before analysis. Other types of analyzers may be used if shown to yield equivalent results and if approved in advance by the Administrator.

(2) If CO instruments are used which are essentially free of CO_2 and water vapor interference, the use of the conditioning column may be deleted. (See §§ 86.1322–84 and 86.1342–90 of this chapter.)

(3) A CO instrument will be considered to be essentially free of CO_2 and water vapor interference if its response to a mixture of 3 percent CO_2 in N2, which has been bubbled through water at room temperature, produces an equivalent CO response, as measured on the most sensitive CO range, which is less than 1 percent of full scale CO concentration on ranges above 300 ppm full scale or less than 3 ppm on ranges below 300 ppm full scale. (See § 86.1322–84 of this chapter.)

(c) *Alternate analytical systems.* Analysis systems meeting the specifications of part 86, subpart D of this chapter (with the exception of §§ 86.346–79 and 86.347–79) may be used for the testing required under this subpart. Heated analyzers may be used in their heated configuration.

(d) Other analyzers and equipment. Other types of analyzers and equipment may be used if shown to yield

equivalent results and if approved in advance by the Administrator.

[59 FR 31335, June 17, 1994. Redesignated at 63 FR 56996, Oct. 23, 1998]

§ 89.422 Dilute sampling procedures—CVS calibration.

(a) The CVS is calibrated using an accurate flowmeter and restrictor valve.

(1) The flowmeter calibration must be traceable to NIST measurements, and will serve as the reference value (NIST ''true'' value) for the CVS calibration. (Note: In no case should an upstream screen or other restriction which can affect the flow be used ahead of the flowmeter unless calibrated throughout the flow range with such a device.)

(2) The CVS calibration procedures are designed for use of a ''metering venturi'' type flowmeter. Large radius or ASME flow nozzles are considered equivalent if traceable to NIST measurements. Other measurement systems may be used if shown to be equivalent under the test conditions in this section and traceable to NIST measurements.

(3) Measurements of the various flowmeter parameters are recorded and related to flow through the CVS.

(4) Procedures used by EPA for both PDP–CVS and CFV–CVS are outlined below. Other procedures yielding equivalent results may be used if approved in advance by the Administrator.

(b) After the calibration curve has been obtained, verification of the entire system may be performed by injecting a known mass of gas into the system and comparing the mass indicated by the system to the true mass injected. An indicated error does not necessarily mean that the calibration is wrong, since other factors can influence the accuracy of the system (for example, analyzer calibration, leaks, or HC hangup). A verification procedure is found in paragraph (e) of this section.

(c) *PDP–CVS calibration.* (1) The following calibration procedure outlines the equipment, the test configuration, and the various parameters which must be measured to establish the flow rate of the PDP–CVS pump.

(i) All the parameters related to the pump are simultaneously measured with the parameters related to a flowmeter which is connected in series with the pump.

(ii) The calculated flow rate, in (cm^3/s), (at pump inlet absolute pressure and temperature) can then be plotted versus a correlation function which is the value of a specific combination of pump parameters.

(iii) The linear equation which relates the pump flow and the correlation function is then determined.

(iv) In the event that a CVS has a multiple speed drive, a calibration for each range used must be performed.

(2) This calibration procedure is based on the measurement of the absolute values of the pump and flowmeter parameters that relate the flow rate at each point. Two conditions must be maintained to assure the accuracy and integrity of the calibration curve:

(i) The temperature stability must be maintained during calibration. (Flowmeters are sensitive to inlet temperature oscillations; this can cause the data points to be scattered. Gradual changes in temperature are acceptable as long as they occur over a period of several minutes.)

(ii) All connections and ducting between the flowmeter and the CVS pump must be absolutely void of leakage.

(3) During an exhaust emission test the measurement of these same pump parameters enables the user to calculate the flow rate from the calibration equation.

(4) Connect a system as shown in Figure 5 in appendix A to this subpart. Although particular types of equipment are shown, other configurations that yield equivalent results may be used if approved in advance by the Administrator. For the system indicated, the following measurements and accuracies are required:

CALIBRATION DATA MEASUREMENTS

Parameter	Symbol	Units	Sensor-readout tolerances
Barometric pressure (corrected)	P_B	kPa	±.34 kPa

CALIBRATION DATA MEASUREMENTS—Continued

Parameter	Symbol	Units	Sensor-readout tolerances
Ambient temperature	T_A	°C	±.3 °C
Air temperature into metering venturi	*ETI*	°C	±1.1 °C
Pressure drop between the inlet and throat of metering venturi.	*EDP*	kPa	±.01 kPa
Air flow	Q_S	m³/min	±.5% of NIST value.
Air temperature at CVS pump inlet	*PTI*	°C	±1.1 °C
Pressure depression at CVS pump inlet	*PPI*	kPa	±.055 kPa
Pressure head at CVS pump outlet	*PPO*	kPa	±.055 kPa
Air temperature at CVS pump outlet (optional)	*PTO*	°C	±1.1 °C
Pump revolutions during test period	*N*	Revs	±1 Rev.
Elapsed time for test period	*t*	s	±.5 s.

(5) After the system has been connected as shown in Figure 5 in appendix A to this subpart, set the variable restrictor in the wide open position and run the CVS pump for 20 minutes. Record the calibration data.

(6) Reset the restrictor valve to a more restricted condition in an increment of pump inlet depression that will yield a minimum of six data points for the total calibration. Allow the system to stabilize for 3 minutes and repeat the data acquisition.

(7) Data analysis:

(i) The air flow rate, Q_s, at each test point is calculated in standard cubic meters per minute (0 °C, 101.3 kPa) from the flowmeter data using the manufacturer's prescribed method.

(ii) The air flow rate is then converted to pump flow, V_o, in cubic meter per revolution at absolute pump inlet temperature and pressure:

$$V_o = \frac{Q_s}{n} \times \frac{T_p}{273} \times \frac{101.3}{P_p}$$

Where:

V_o = Pump flow, (m³/rev) at T_p, P_p.

Q_s = Meter air flow rate in standard cubic meters per minute, standard conditions are 0 °C, 101.3 kPa.

n=Pump speed in revolutions per minute.

T_p=Pump inlet temperature °K=P_{ti}+273 °K, P_{ti}=Pump inlet temp °C

P_p=Absolute pump inlet pressure, (kPa) $= P_B - P_{PI}$

Where:

P_B=barometric pressure, (kPa).

P_{PI}=Pump inlet depression, (kPa).

(iii) The correlation function at each test point is then calculated from the calibration data:

$$X_o = \frac{1}{n}\sqrt{\left(\frac{\Delta p}{P_e}\right)}$$

X_o = correlation function.

Δp = The pressure differential from pump inlet to pump outlet, (kPa). $= P_e - P_p$.

P_e = Absolute pump outlet pressure, (kPa) $= P_B + P_{PO}$

Where:

P_{PO}=Pressure head at pump outlet, (kPa).

(iv) A linear least squares fit is performed to generate the calibration equation which has the form:

$V_o = D_o - M(X_o)$

D_o and M are the intercept and slope constants, respectively, describing the regression line.

(8) A CVS system that has multiple speeds must be calibrated on each speed used. The calibration curves generated for the ranges will be approximately parallel and the intercept values, D_o, will increase as the pump flow range decreases.

(9) If the calibration has been performed carefully, the calculated values from the equation will be within ±0.50 percent of the measured value of V_o. Values of M will vary from one pump to another, but values of D_o for pumps of the same make, model, and range should agree within ±3 percent of each other. Calibrations should be performed at pump start-up and after major maintenance to assure the stability of the pump slip rate. Analysis of mass injection data will also reflect pump slip stability.

(d) *CFV–CVS calibration.* (1) Calibration of the CFV is based upon the flow equation for a critical venturi. Gas

flow is a function of inlet pressure and temperature:

$$Q_s = \frac{K_v P}{\sqrt{T}}$$

Where:

Qs = flow.
Kv = calibration coefficient.
P = absolute pressure.
T = absolute temperature.

The calibration procedure described in paragraph (d)(3) of this section establishes the value of the calibration coefficient at measured values of pressure, temperature, and air flow.

(2) The manufacturer's recommended procedure shall be followed for calibrating electronic portions of the CFV.

(3) Measurements necessary for flow calibration are as follows:

CALIBRATION DATA MEASUREMENTS

Parameter	Symbol	Units	Tolerances
Barometric pressure (corrected)	P_B	kPa (Inches Hg)	0.034 (0.01).
Air temperature, flowmeter	ETI	deg.C (deg.F)	0.14 (0.25).
Pressure depression upstream of LFE	EPI	kPa(Inches H_2O)	0.012 (0.05).
Pressure drop across LFE matrix	EDP	kPa (Inches H_2O)	0.001 (0.005).
Air flow	Q_s	m^3/min. (Ft^3/min)	0.5 pct.
CFV inlet depression	PPI	kPa (Inches Hg)	0.055 (0.016).
CFV outlet pressure	PPO	kPa (Inches Hg)	0.17 (0.05).
Temperature at venturi inlet	T_v	deg.C (deg.F)	0.28 (0.5)
Specific gravity of manometer fluid	Sp.Gr		(1.75 oil).

(4) Set up equipment as shown in Figure 6 in appendix A to subpart and eliminate leaks. (Leaks between the flow measuring devices and the critical flow venturi will seriously affect the accuracy of the calibration.)

(5) Set the variable flow restrictor to the open position, start the blower, and allow the system to stabilize. Record data from all instruments.

(6) Vary the flow restrictor and make at least eight readings across the critical flow range of the venturi.

(7) *Data analysis*. The data recorded during the calibration are to be used in the following calculations:

(i) The air flow rate (designated as Q_s) at each test point is calculated in standard cubic feet per minute from the flow meter data using the manufacturer's prescribed method.

(ii) Calculate values of the calibration coefficient for each test point:

$$K_v = \frac{Q_s \sqrt{T_v}}{P_v}$$

Where:

Q_s = Flow rate in standard cubic meter per minute, at the standard conditions of 0 °C, 101.3 kPa.
T_v = Temperature at venturi inlet, °K.
P_v = PB - PPI (= Pressure at venturi inlet, kPA)

Where:

P_{PI} = Venturi inlet pressure depression, (kPa).

(iii) Plot K_v as a function of venturi inlet pressure. For choked flow, K_v will have a relatively constant value. As pressure decreases (vacuum increases), the venturi becomes unchoked and K_v decreases. (See Figure 7 in appendix A to this subpart.)

(iv) For a minimum of eight points in the critical region calculate an average K_v and the standard deviation.

(v) If the standard deviation exceeds 0.3 percent of the average K_v, take corrective action.

(e) *CVS system verification*. The following ''gravimetric'' technique can be used to verify that the CVS and analytical instruments can accurately measure a mass of gas that has been injected into the system. (Verification can also be accomplished by constant flow metering using critical flow orifice devices.)

(1) Obtain a small cylinder that has been charged with 99.5 percent or greater propane or carbon monoxide gas (Caution—carbon monoxide is poisonous).

(2) Determine a reference cylinder weight to the nearest 0.01 grams.

(3) Operate the CVS in the normal manner and release a quantity of pure propane into the system during the

sampling period (approximately 5 minutes).

(4) The calculations are performed in the normal way except in the case of propane. The density of propane (0.6109 kg/m^3/carbon atom)) is used in place of the density of exhaust hydrocarbons.

(5) The gravimetric mass is subtracted from the CVS measured mass and then divided by the gravimetric mass to determine the percent accuracy of the system.

(6) Good engineering practice requires that the cause for any discrepancy greater than ±2 percent must be found and corrected.

[59 FR 31335, June 17, 1994. Redesignated and amended at 63 FR 56996, 57018, Oct. 23, 1998]

§ 89.423 [Reserved]

§ 89.424 Dilute emission sampling calculations.

(a) The final reported emission test results are computed by use of the following formula:

$$A_{WM} = \frac{\sum_{i=1}^{i=n}\left(g_i \times WF_i\right)}{\sum_{i=1}^{i=n}\left(P_i \times WF_i\right)}$$

Where:

A_{wm} = Weighted mass emission level (HC, CO, CO_2, PM, or NO_X) in g/kW-hr.

g_i = Mass flow in grams per hour, = grams measured during the mode divided by the sample time for the mode.

WF_i = Effective weighing factor.

P_i = Power measured during each mode (Power set = zero for the idle mode).

(b) The mass of each pollutant for each mode for bag measurements and diesel heat exchanger system measurements is determined from the following equations:

(1) Hydrocarbon mass:

$HC_{mass} = V_{mix} \times Density_{HC} \times (HC_{conc}/10^6)$

(2) Oxides of nitrogen mass:

$NO_{Xmass} = V_{mix} \times Density_{NO2} \times KH \times (NO_{Xconc}/10^6)$

(3) Carbon monoxide mass:

$CO_{mass} = V_{mix} \times Density_{CO} \times (CO_{conc}/10^6)$

(4) Carbon dioxide mass:

$CO_{2mass} = V_{mix} \times Density_{CO2} \times (CO_{2conc}/10_2)$

(c) The mass of each pollutant for the mode for flow compensated sample systems is determined from the following equations:

$$HC_{mass} = V_{mix} \times Density_{HC} \frac{HC_e - HC_d\left(1 - \frac{1}{DF}\right)}{10^6}$$

$$NOX_{mass} = K_H \frac{NOX_e - NOX_d\left(1 - \frac{1}{DF}\right)}{10^6} V_{mix} \times Density_{NO_2}$$

$$CO_{mass} = V_{mix} \times Density_{CO} \frac{CO_c - CO_d\left(1 - \frac{1}{DF}\right)}{10^6}$$

$$CO_{2_{mass}} = V_{mix} \times Density_{CO_2} \frac{CO_{2_e} - CO_{2_d}\left(1 - \frac{1}{DF}\right)}{10^6}$$

(d) Meaning of symbols:

(1) For hydrocarbon equations:

HC_{mass}= Hydrocarbon emissions, in grams per test mode.

$Density_{HC}$= Density of hydrocarbons is (.5800 kg/m³) for #1 diesel, and (0.5746 kg/m³) for #2 diesel, assuming an average carbon to hydrogen ratio of 1:1.93 for #1 diesel, and 1:1.80 for #2 diesel at 20 °C and 101.3 kPa pressure.

HC_{conc}= Hydrocarbon concentration of the dilute exhaust sample corrected for background, in ppm carbon equivalent (that is, equivalent propane times 3).

$$HC_{conc} = HC_e - HC_d\left(1 - \frac{1}{DF}\right)$$

Where:

HC_e= Hydrocarbon concentration of the dilute exhaust bag sample or, for diesel heat exchanger systems, average hydrocarbon concentration of the dilute exhaust sample as calculated from the integrated HC traces, in ppm carbon equivalent. For flow compensated sample systems $(HC_e)_i$ is the instantaneous concentration.

HC_d= Hydrocarbon concentration of the dilution air as measured, in ppm carbon equivalent.

(2) For oxides of nitrogen equations:

NO_{Xmass} = Oxides of nitrogen emissions, in grams per test mode.

$Density\ NO_2$= Density of oxides of nitrogen is 1.913 kg/m³, assuming they are in the form of nitrogen dioxide, at 20 °C and 101.3 kPa pressure.

NO_{Xconc}= Oxides of nitrogen concentration of the dilute exhaust sample corrected for background, in ppm:

$$NOx_{conc} = NOx_e - NOx_d\left(1 - \frac{1}{DF}\right)$$

Where:

NO_{Xe}= Oxides of nitrogen concentration of the dilute exhaust bag sample as measured, in ppm. For flow compensated sample systems $(NO_{Xe})_i$ is the instantaneous concentration.

NO_{Xd}= Oxides of nitrogen concentration of the dilute air as measured, in ppm.

(3) For carbon monoxide equations:

CO_{mass}=Carbon monoxide emissions, grams per test mode. $Density_{CO}$=Density of carbon monoxide (1.164 kg/m³ at 20 °C and 101.3 kPa pressure).

CO_{conc}=Carbon monoxide concentration of the dilute exhaust sample corrected for background, water vapor, and CO_2 extraction, ppm.

$$CO_{conc} = CO_e - CO_d\left(1 - \frac{1}{DF}\right)$$

Where:

CO_e=Carbon monoxide concentration of the dilute exhaust bag sample volume corrected for water vapor and carbon dioxide extraction, ppm. For flow compensated

sample systems, $(CO_e)_i$ is the instantaneous concentration.

The following calculation assumes the carbon to hydrogen ratio of the fuel is 1:1.85. As an option the measured actual carbon to hydrogen ratio may be used:

$CO_e = [1 - 0.01925CO_{2e} - 0.000323R]CO_{em}$

Where:

CO_{em}=Carbon monoxide concentration of the dilute exhaust sample as measured, ppm.

CO_{2e}=Carbon dioxide concentration of the dilute exhaust bag sample, in percent, if measured. For flow compensated sample systems, $(CO_{2e})_i$ is the instantaneous concentration. For cases where exhaust sampling of CO_2 is not performed, the following approximation is permitted:

$$CO_{2_e} = \frac{44.010}{12.011 + 1.008\alpha} \frac{M^1\ 453.6}{Density_{CO_2}} \frac{100}{V_{mix}}$$

^{a}=Average carbon to hydrogen ratio.

M^1 = Fuel mass consumed during the mode.

R=Relative humidity of the dilution air, percent.

CO_d=Carbon monoxide concentration of the dilution air corrected for water vapor extraction, ppm.

$CO_d = (1 - 0.000323R)CO_{dm}$

Where:

CO_{dm}=Carbon monoxide concentration of the dilution air sample as measured, ppm.

NOTE: If a CO instrument which meets the criteria specified in §86.1311–90 of this chapter is used and the conditioning column has been deleted, CO_{em} must be substituted directly for CO_e and CO_{dm} must be substituted directly for CO_d.

(4) For carbon dioxide equation:

CO_{2mass}=Carbon dioxide emissions, in grams per test mode.

Density CO_2=Density of carbon dioxide is 1.830 kg/m^3, at 20 °C and 760 mm Hg pressure.

CO_{2conc}=Carbon dioxide concentration of the dilute exhaust sample corrected for background, in percent.

$$CO_{2_{mass}} = CO_{2_e} - CO_{2_d}\left(1 - \frac{1}{DF}\right)$$

Where:

CO_{2d}=Carbon dioxide concentration of the dilution air as measured, in percent.

$$(5)\ DF = \frac{13.4}{CO_{2_e} + \left(HC_e + CO_e \times 10^{-4}\right)},\ \text{or}\ DF = \frac{13.4}{CO_{2_e}}.$$

(6) Measured ''dry'' concentrations shall be corrected to a wet basis, if not already measured on a wet basis. This section is applicable only for measurements made on dilute exhaust gas. Correction to a wet basis shall be according to the following formula:

$Conc_{WET} = K_W \times Conc_{DRY}$

Where: K_W is determined according to the equation in paragraph (d)(6)(i) or (d)(6)(ii), of this section.

(i) For wet CO_2 measurement:

$$K_w = \left(1 - \frac{\alpha \times CO_2\%conc(wet)}{200}\right) - K_{w1}$$

(ii) For dry CO_2 measurement:

$$K_w = \left(\frac{(1 - K_{W1})}{1 + \frac{\alpha \times CO_2\%conc(dry)}{200}} \right)$$

(iii) For the equations in paragraph (d)(6)(i) and (d)(6)(ii) of this section, the following equation applies:

$$K_{w1} = \frac{1.608 \times \left[H_d \times \left(1 - 1/DF\right) + H_a \times \left(1/DF\right) \right]}{1000 + \left\{ 1.608 \times \left[H_d \times \left(1 - 1/DF\right) + H_a \times \left(1/DF\right) \right] \right\}} +$$

Where: H_a and H_d are the grams of water per kilogram of dry air; as illustrated in the following equations:

$$H_d = \frac{6.22 \times R_d \times p_d}{p_B - \left(p_d \times R_d \times 10^{-2}\right)}$$

$$H_a = \frac{6.22 \times R_a \times p_a}{p_B - \left(p_a \times R_a \times 10^{-2}\right)}$$

(e) The final modal reported brake-specific fuel consumption (bsfc) shall be computed by use of the following formula:

$$bsfc = \frac{M}{kW - hr}$$

Where:

bsfc = brake-specific fuel consumption for a mode in grams of fuel per kilowatt-hour (kW-hr).

M = mass of fuel in grams, used by the engine during a mode.

kW-hr = total kilowatts integrated with respect to time for a mode.

(f) The mass of fuel for the mode is determined from mass fuel flow measurements made during the mode, or from the following equation:

$$M = \left(\frac{G_S}{R_2} \right) \left(\frac{1}{273.15} \right)$$

Where:

M=Mass of fuel, in grams, used by the engine during the mode.

G_s=Grams of carbon measured during the mode:

$$G_S = \left[\frac{12.011}{12.011 + \alpha\,(1.008)}\right] HC_{mass} + 0.429CO_{mass} + 0.273CO_{2_{mass}}$$

R_2=Grams C in fuel per gram of fuel

Where:

HC_{mass}=hydrocarbon emissions, in grams for the mode

CO_{2mass}=carbon monoxide emissions, in grams for the mode

CO_{2mass}=carbon dioxide emissions, in grams for the mode

α=The atomic hydrogen to carbon ratio of the fuel.

[59 FR 31335, June 17, 1994. Redesignated and amended at 63 FR 56996, 57018, Oct. 23, 1998]

§ 89.425 [Reserved]

APPENDIX A TO SUBPART E OF PART 89—FIGURES

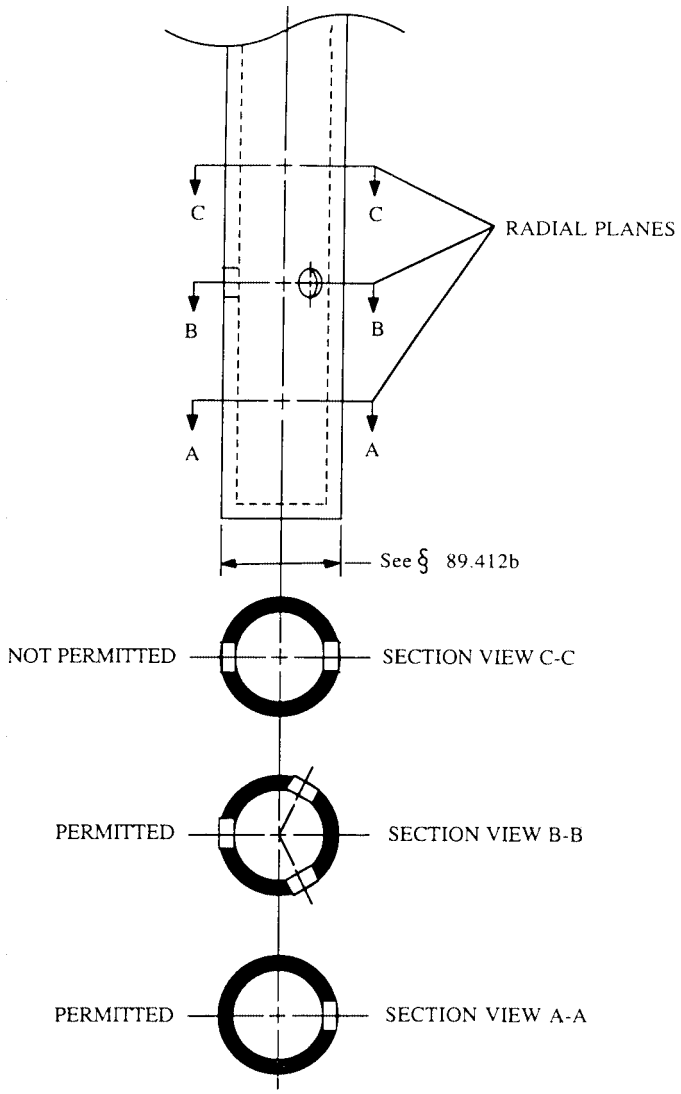

Figure 1.--SAMPLE PROBE AND TYPICAL HOLE SPACING

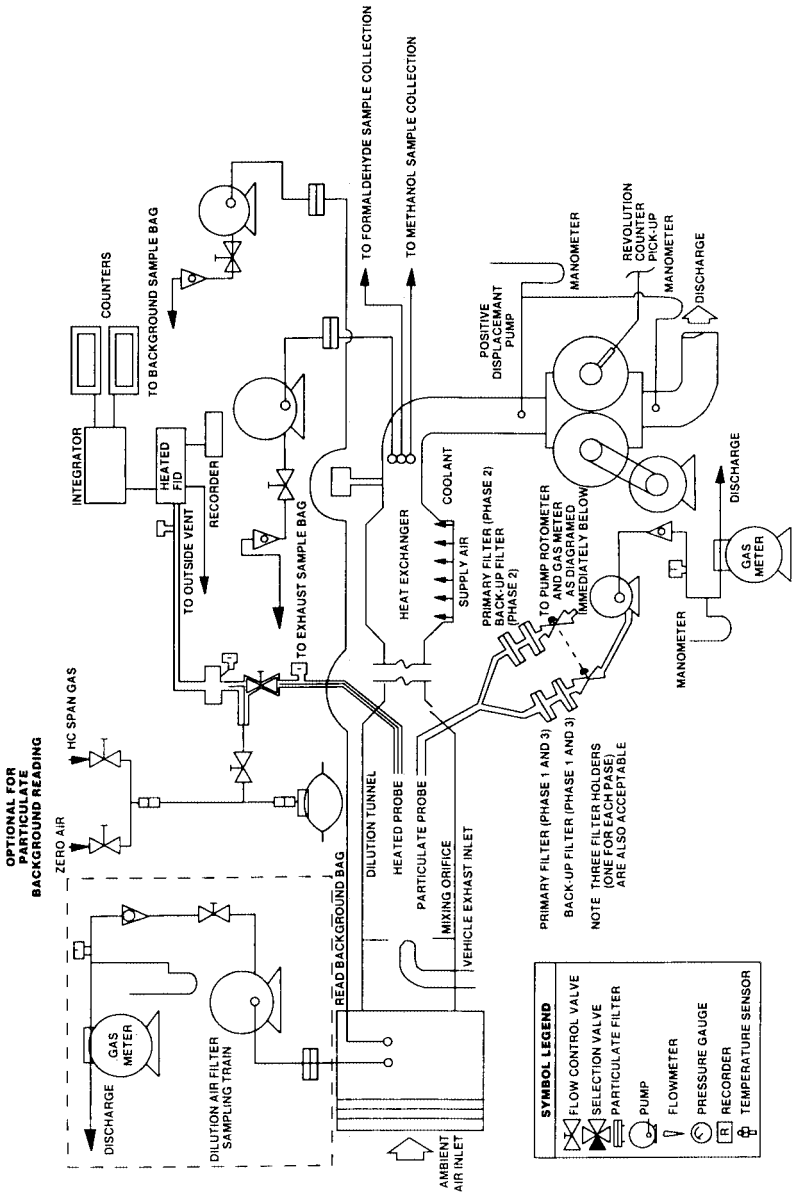

Figure 2 — Gaseous & Particulate Emissions Sampling System (PDP-CVS)

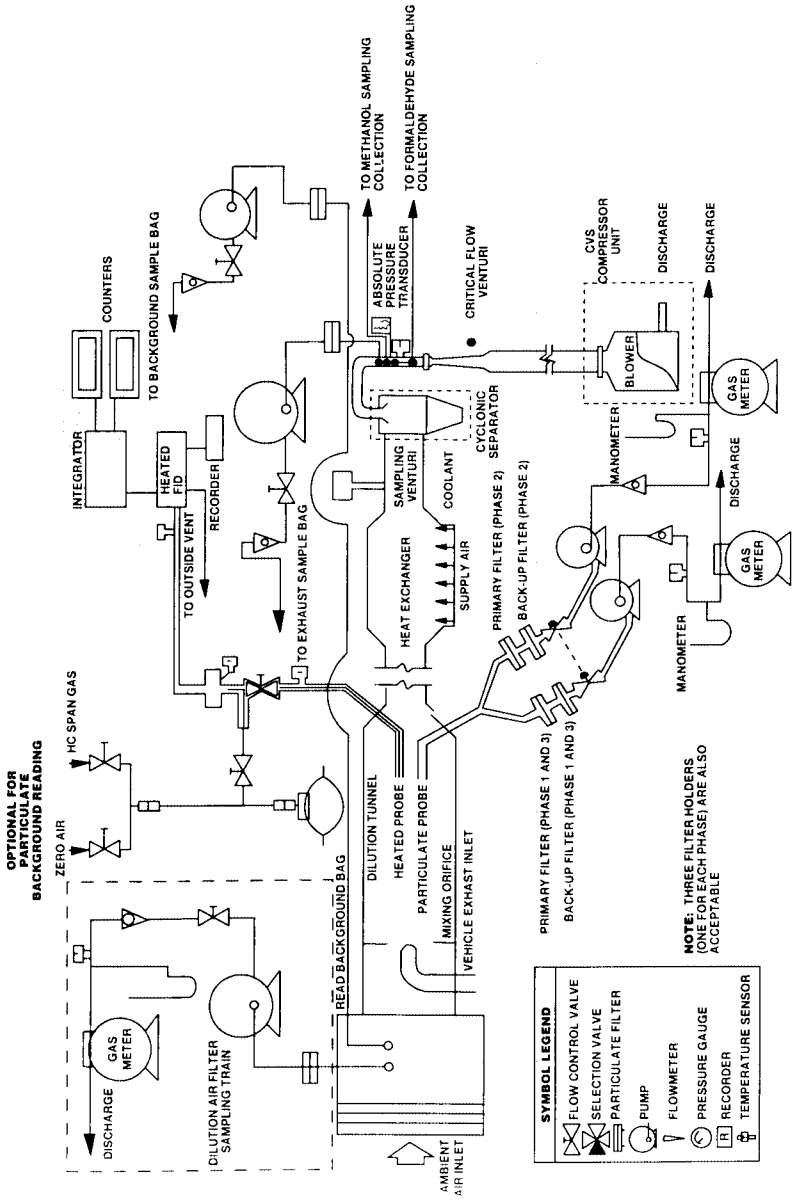

Figure 3. — Gaseous and Particulate Emissions Sampling System (CVF-CVS)

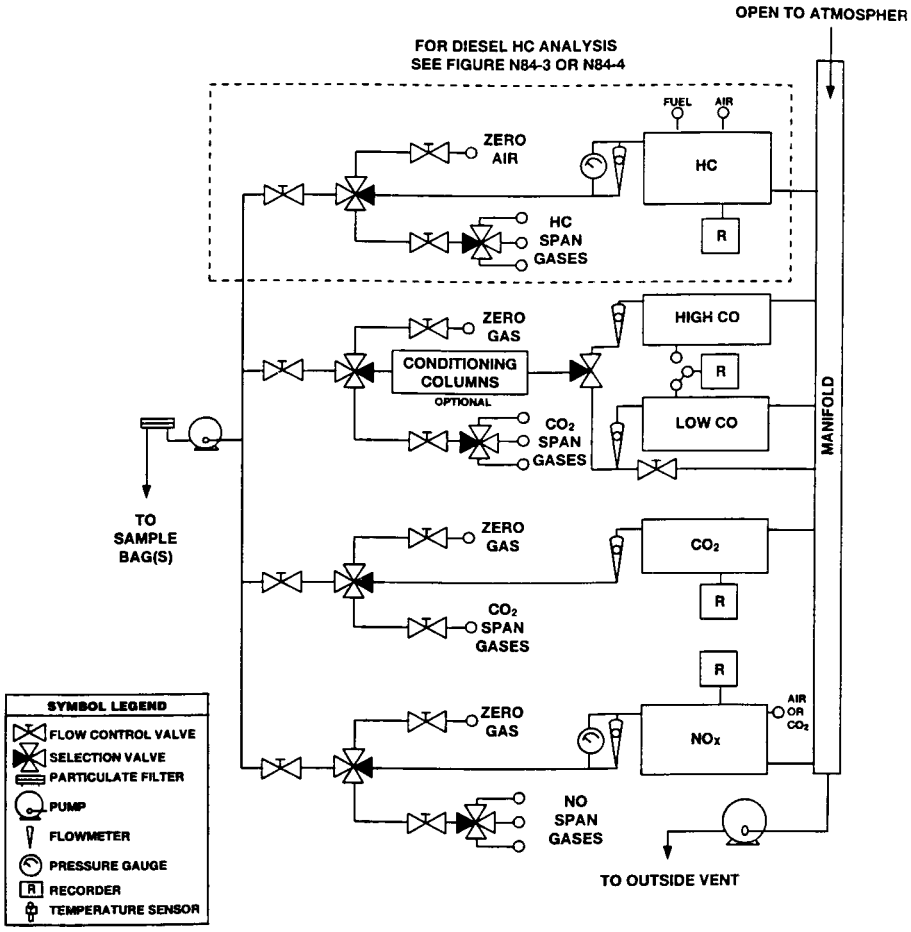

Figure 4. — Exhaust Gas Analytical System

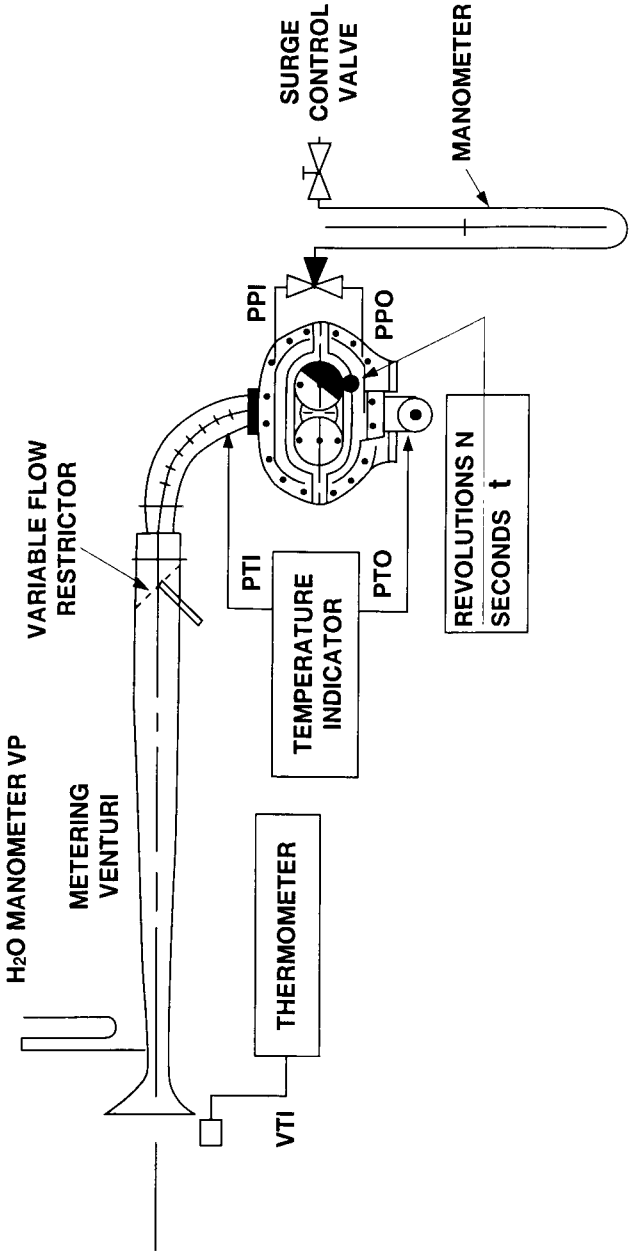

Figure 5. — PDP-CVS Calibration Configuration

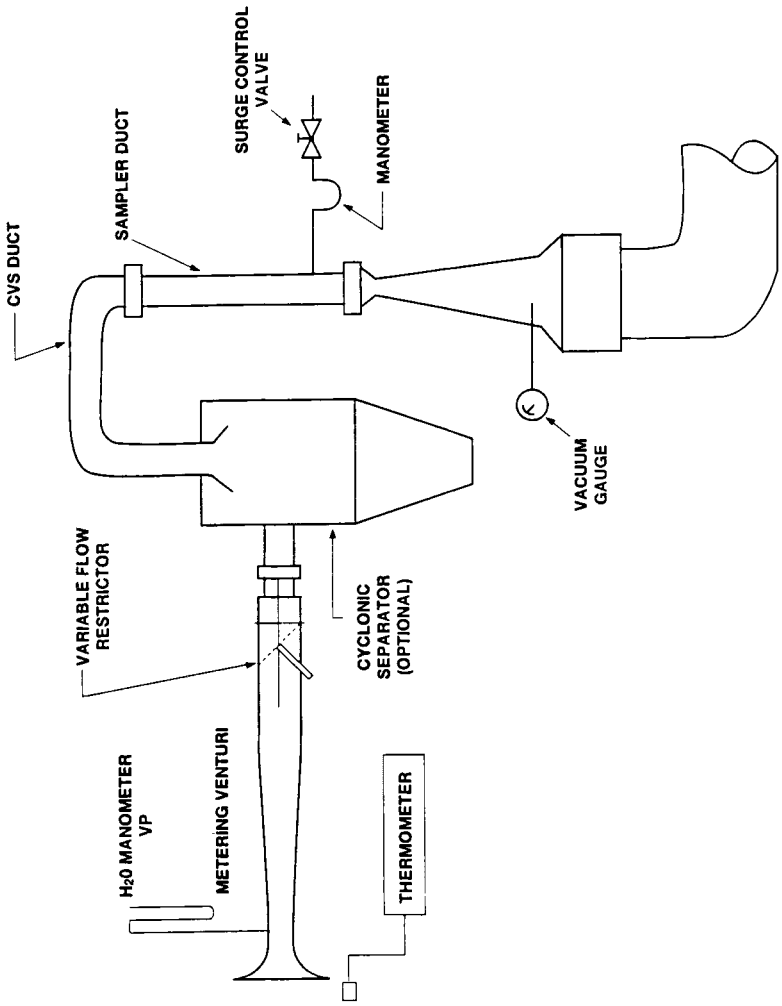

Figure 6. — CFV-CVS Calibration Configuration

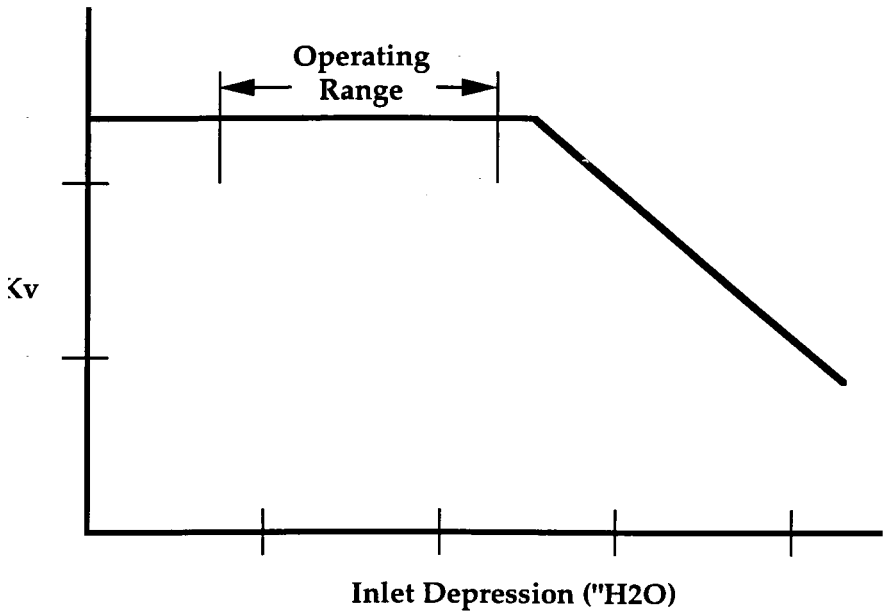

Figure 7.—Sonic Flow Choking

APPENDIX B TO SUBPART E OF PART 89—TABLES

TABLE 1—8-MODE TEST CYCLE FOR VARIABLE-SPEED ENGINES

Test segment	Mode number	Engine speed [1]	Observed torque [2] (percent of max. observed)	Minimum time in mode (minutes)	Weighting factors
1	1	Rated	100	5.0	0.15
1	2	Rated	75	5.0	0.15
1	3	Rated	50	5.0	0.15
1	4	Rated	10	5.0	0.10
2	5	Int	100	5.0	0.10
2	6	Int	75	5.0	0.10
2	7	Int	50	5.0	0.10
2	8	Idle	0	5.0	0.15

[1] Engine speed (non-idle): ±2 percent of point. Engine speed (idle): Within manufacturer's specifications. Idle speed is specified by the manufacturer.
[2] Torque (non-idle): Throttle fully open for 100 percent points. Other non-idle points: ±2 percent of engine maximum value. Torque (idle): Throttle fully closed. Load less than 5 percent of peak torque.

TABLE 2—5-MODE TEST CYCLE FOR CONSTANT-SPEED ENGINES

Mode number	Engine[1] Speed	Observed torque [2] (percent of max. observed)	Minimum time in mode (minutes)	Weighting factors
1	Rated	100	5.0	0.05
2	Rated	75	5.0	0.25

TABLE 2—5-MODE TEST CYCLE FOR CONSTANT-SPEED ENGINES—Continued

Mode number	Engine[1] Speed	Observed torque[2] (percent of max. observed)	Minimum time in mode (minutes)	Weighting factors
3	Rated	50	5.0	0.30
4	Rated	25	5.0	0.30
5	Rated	10	5.0	0.10

[1] Engine speed: ±2 percent of point.
[2] Torque: Throttle fully open for 100 percent point. Other points: ±2 percent of engine maximum value.

TABLE 3—6-MODE TEST CYCLE FOR ENGINES RATED UNDER 19 kW

Mode number	Engine speed[1]	Observed torque[2] (percent of max. observed)	Minimum time in mode (minutes)	Weighting factors
1	Rated	100	5.0	0.09
2	Rated	75	5.0	0.20
3	Rated	50	5.0	0.29
4	Rated	25	5.0	0.30
5	Rated	10	5.0	0.07
6	Idle	0	5.0	0.05

[1] Engine speed (non-idle): ±2 percent of point. Engine speed (idle): Within manufacturer's specifications. Idle speed is specified by the manufacturer.
[2] Torque (non-idle): Throttle fully open for operation at 100 percent point. Other nonidle points: ±2 percent of engine maximum value. Torque (idle): Throttle fully closed. Load less than 5 percent of peak torque.

TABLE 4—4-MODE TEST CYCLE FOR PROPULSION MARINE DIESEL ENGINES

Mode number	Engine speed[1] (percent of max. observed)	Observed power[2] (percent of max. observed)	Minimum time in mode (minutes)	Weighting factors
1	100	100	5.0	0.20
2	91	75	5.0	0.50
3	80	50	5.0	0.15
4	63	25	5.0	0.15

[1] Engine speed: ±2 percent of point.
[2] Power: Throttle fully open for operation at 100 percent point. Other points: ±2 percent of engine maximum value.

[63 FR 57019, Oct. 23, 1998]

Subpart F—Selective Enforcement Auditing

§ 89.501 Applicability.

The requirements of subpart F are applicable to all nonroad engines subject to the provisions of subpart A of part 89.

[59 FR 31335, June 17, 1994. Redesignated at 63 FR 56996, Oct. 23, 1998]

§ 89.502 Definitions.

The definitions in subpart A of this part apply to this subpart. The following definitions also apply to this subpart.

Acceptable quality level (AQL) means the maximum percentage of failing engines that can be considered a satisfactory process average for sampling inspections.

Configuration means any subclassification of an engine family which can be described on the basis of gross power, emission control system, governed speed, injector size, engine calibration, and other parameters as designated by the Administrator.

Inspection criteria means the pass and fail numbers associated with a particular sampling plan.

Test engine means an engine in a test sample.

Test sample means the collection of engines selected from the population of an engine family for emission testing.

[59 FR 31335, June 17, 1994. Redesignated at 63 FR 56996, Oct. 23, 1998]

§ 89.503 Test orders.

(a) A test order addressed to the manufacturer is required for any testing under this subpart.

(b) The test order is signed by the Assistant Administrator for Air and Radiation or his or her designee. The test order must be delivered in person by an EPA enforcement officer or EPA authorized representative to a company representative or sent by registered mail, return receipt requested, to the manufacturer's representative who signed the application for certification submitted by the manufacturer, pursuant to the requirements of the applicable section of subpart B of this part. Upon receipt of a test order, the manufacturer must comply with all of the provisions of this subpart and instructions in the test order.

(c) *Information included in test order.* (1) The test order will specify the engine family to be selected for testing, the manufacturer's engine assembly plant or associated storage facility or port facility (for imported engines) from which the engines must be selected, the time and location at which engines must be selected, and the procedure by which engines of the specified family must be selected. The test order may specify the configuration to be audited and/or the number of engines to be selected per day. Engine manufacturers are required to select a minimum of four engines per day unless an alternate selection procedure is approved pursuant to § 89.507(a), or unless total production of the specified configuration is less than four engines per day. If total production of the specified configuration is less than four engines per day, the manufacturer selects the actual number of engines produced per day.

(2) The test order may include alternate families to be selected for testing at the Administrator's discretion in the event that engines of the specified family are not available for testing because those engines are not being manufactured during the specified time or are not being stored at the specified assembly plant, associated storage facilities, or port of entry.

(3) If the specified family is not being manufactured at a rate of at least two engines per day in the case of manufacturers specified in § 89.508(g)(1), or one engine per day in the case of manufacturers specified in § 89.508(g)(2), over the expected duration of the audit, the Assistant Administrator or her or his designated representative may select engines of the alternate family for testing.

(4) In addition, the test order may include other directions or information essential to the administration of the required testing.

(d) A manufacturer may submit a list of engine families and the corresponding assembly plants, associated storage facilities, or (in the case of imported engines) port facilities from which the manufacturer prefers to have engines selected for testing in response to a test order. In order that a manufacturer's preferred location be considered for inclusion in a test order for a particular engine family, the list must be submitted prior to issuance of the test order. Notwithstanding the fact that a manufacturer has submitted the list, the Administrator may order selection at other than a preferred location.

(e) Upon receipt of a test order, a manufacturer must proceed in accordance with the provisions of this subpart.

(f)(1) During a given model year, the Administrator may not issue to a manufacturer more Selective Enforcement Auditing (SEA) test orders than an annual limit determined to be the larger of the following factors:

(i) Production factor, determined by dividing the projected nonroad engine sales in the United States for that model year, as declared by the manufacturer under § 89.505(c)(1), by 16,000 and rounding to the nearest whole number. If the projected sales are less than 8,000, this factor is one.

(ii) Family factor, determined by dividing the manufacturer's total number of certified engine families by five and rounding to the nearest whole number.

(2) If a manufacturer submits to EPA in writing prior to or during the model year a reliable sales projection update or adds engine families or deletes engine families from its production, that information is used for recalculating

the manufacturer's annual limit of SEA test orders.

(3) Any SEA test order for which the family fails under § 89.510 or for which testing is not completed is not counted against the annual limit.

(4) When the annual limit has been met, the Administrator may issue additional test orders to test those families for which evidence exists indicating noncompliance. An SEA test order issued on this basis will include a statement as to the reason for its issuance.

[59 FR 31335, June 17, 1994. Redesignated at 63 FR 56996, Oct. 23, 1998]

§ 89.504 Testing by the Administrator.

(a) The Administrator may require by test order under § 89.503 that engines of a specified family be selected in a manner consistent with the requirements of § 89.507 and submitted to the Administrator at the place designated for the purpose of conducting emission tests. These tests will be conducted in accordance with § 89.508 to determine whether engines manufactured by the manufacturer conform with the regulations with respect to which the certificate of conformity was issued.

(b) *Designating official data.* (1) Whenever the Administrator conducts a test on a test engine or the Administrator and manufacturer each conduct a test on the same test engine, the results of the Administrator's test comprise the official data for that engine.

(2) Whenever the manufacturer conducts all tests on a test engine, the manufacturer's test data is accepted as the official data, provided that if the Administrator makes a determination based on testing conducted under paragraph (a) of this section that there is a substantial lack of agreement between the manufacturer's test results and the Administrator's test results, no manufacturer's test data from the manufacturer's test facility will be accepted for purposes of this subpart.

(c) If testing conducted under § 89.503 is unacceptable under paragraph (b)(2) of this section, the Administrator must:

(1) Notify the manufacturer in writing of the Administrator's determination that the test facility is inappropriate for conducting the tests required by this subpart and the reasons therefor; and

(2) Reinstate any manufacturer's data upon a showing by the manufacturer that the data acquired under § 89.503 was erroneous and the manufacturer's data was correct.

(d) The manufacturer may request in writing that the Administrator reconsider the determination in paragraph (b)(2) of this section based on data or information which indicates that changes have been made to the test facility and these changes have resolved the reasons for disqualification.

[59 FR 31335, June 17, 1994. Redesignated at 63 FR 56996, Oct. 23, 1998]

§ 89.505 Maintenance of records; submittal of information.

(a) The manufacturer of any new nonroad engine subject to any of the provisions of this subpart must establish, maintain, and retain the following adequately organized and indexed records:

(1) *General records.* A description of all equipment used to test engines in accordance with § 89.508 pursuant to a test order issued under this subpart, specifically, the equipment requirements specified in §§ 86.884–8 and 86.884–9 of this chapter and the equipment requirements specified in §§ 89.306, 89.308, 89.309, and 89.312.

(2) *Individual records.* These records pertain to each audit conducted pursuant to this subpart and include:

(i) The date, time, and location of each test;

(ii) The number of hours of service accumulated on the engine when the test began and ended;

(iii) The names of all supervisory personnel involved in the conduct of the audit;

(iv) A record and description of any repairs performed prior to and/or subsequent to approval by the Administrator, giving the date, associated time, justification, name(s) of the authorizing personnel, and names of all supervisory personnel responsible for the conduct of the repair;

(v) The date the engine was shipped from the assembly plant, associated storage facility or port facility, and date the engine was received at the testing facility;

(vi) A complete record of all emission tests performed pursuant to this subpart (except tests performed directly by EPA), including all individual worksheets and/or other documentation relating to each test, or exact copies thereof, to be in accordance with the record requirements specified in § 89.404 or § 86.884–10 of this chapter.

(vii) A brief description of any significant audit events not described under paragraph (a)(2) of this section, commencing with the test engine selection process and including such extraordinary events as engine damage during shipment.

(3) The manufacturer must record test equipment description, pursuant to paragraph (a)(1) of this section, for each test cell that can be used to perform emission testing under this subpart.

(b) The manufacturer must retain all records required to be maintained under this subpart for a period of one year after completion of all testing in response to a test order. Records may be retained as hard copy or reduced to microfilm, floppy disc, and so forth, depending upon the manufacturer's record retention procedure; provided, that in every case, all the information contained in the hard copy is retained.

(c) The manufacturer must, upon request by the Administrator, submit the following information with regard to engine production:

(1) Projected production for each engine configuration within each engine family for which certification is requested;

(2) Number of engines, by configuration and assembly plant, scheduled for production for the time period designated in the request;

(3) Number of engines, by configuration and by assembly plant, storage facility or port facility, scheduled to be stored at facilities for the time period designated in the request; and

(4) Number of engines, by configuration and assembly plant, produced during the time period designated in the request that are complete for introduction into commerce.

(d) Nothing in this section limits the Administrator's discretion in requiring the manufacturer to retain additional records or submit information not specifically required by this section.

(e) All reports, submissions, notifications, and requests for approvals made under this subpart are addressed to: Director, Engine Programs and Compliance Division (6405–J), U.S. Environmental Protection Agency, 1200 Pennsylvania Ave., NW., Washington, DC 20460.

[59 FR 31335, June 17, 1994. Redesignated and amended at 63 FR 56996, 57020, Oct. 23, 1998]

§ 89.506 Right of entry and access.

(a) To allow the Administrator to determine whether a manufacturer is complying with the provisions of this subpart and a test order issued thereunder, EPA enforcement officers or EPA authorized representatives may enter during operating hours and upon presentation of credentials any of the following places:

(1) Any facility where any engine to be introduced into commerce, including ports of entry, or any emission-related component is manufactured, assembled, or stored;

(2) Any facility where any tests conducted pursuant to a test order or any procedures or activities connected with these tests are or were performed;

(3) Any facility where any engine which is being tested, was tested, or will be tested is present; and

(4) Any facility where any record or other document relating to any of the above is located.

(b) Upon admission to any facility referred to in paragraph (a) of this section, EPA enforcement officers or EPA authorized representatives are authorized to perform the following inspection-related activities:

(1) To inspect and monitor any aspects of engine manufacture, assembly, storage, testing and other procedures, and the facilities in which these procedures are conducted;

(2) To inspect and monitor any aspect of engine test procedures or activities, including, but not limited to, engine selection, preparation, service accumulation, emission test cycles, and maintenance and verification of test equipment calibration;

(3) To inspect and make copies of any records or documents related to the assembly, storage, selection, and testing

of an engine in compliance with a test order; and

(4) To inspect and photograph any part or aspect of any engine and any component used in the assembly thereof that is reasonably related to the purpose of the entry.

(c) EPA enforcement officers or EPA authorized representatives are authorized to obtain reasonable assistance without cost from those in charge of a facility to help the officers perform any function listed in this subpart and they are authorized to request the recipient of a test order to make arrangements with those in charge of a facility operated for the manufacturer's benefit to furnish reasonable assistance without cost to EPA whether or not the recipient controls the facility.

(1) Reasonable assistance includes, but is not limited to, clerical, copying, interpretation and translation services; the making available on an EPA enforcement officer's or EPA authorized representative's request of personnel of the facility being inspected during their working hours to inform the EPA enforcement officer or EPA authorized representative of how the facility operates and to answer the officer's or representative's questions; and the performance on request of emission tests on any engine which is being, has been, or will be used for SEA testing.

(2) A manufacturer may be compelled to cause the personal appearance of any employee at such a facility before an EPA enforcement officer or EPA authorized representative by written request for his appearance, signed by the Assistant Administrator for Air and Radiation, served on the manufacturer. Any such employee who has been instructed by the manufacturer to appear will be entitled to be accompanied, represented, and advised by counsel.

(d) EPA enforcement officers or EPA authorized representatives are authorized to seek a warrant or court order authorizing the EPA enforcement officers or EPA authorized representatives to conduct activities related to entry and access as authorized in this section, as appropriate, to execute the functions specified in this section. EPA enforcement officers or authorized representatives may proceed ex parte to obtain a warrant whether or not the EPA enforcement officers or EPA authorized representatives first attempted to seek permission of the recipient of the test order or the party in charge of the facilities in question to conduct activities related to entry and access as authorized in this section.

(e) A recipient of a test order must permit an EPA enforcement officer(s) or EPA authorized representative(s) who presents a warrant or court order to conduct activities related to entry and access as authorized in this section and as described in the warrant or court order. The recipient must also cause those in charge of its facility or a facility operated for its benefit to permit entry and access as authorized in this section pursuant to a warrant or court order whether or not the recipient controls the facility. In the absence of a warrant or court order, an EPA enforcement officer(s) or EPA authorized representative(s) may conduct activities related to entry and access as authorized in this section only upon the consent of the recipient of the test order or the party in charge of the facilities in question.

(f) It is not a violation of this part or the Clean Air Act for any person to refuse to permit an EPA enforcement officer(s) or EPA authorized representative(s) to conduct activities related to entry and access as authorized in this section if the officer(s) or representative(s) appears without a warrant or court order.

(g) A manufacturer is responsible for locating its foreign testing and manufacturing facilities in jurisdictions where local law does not prohibit an EPA enforcement officer(s) or EPA authorized representative(s) from conducting the entry and access activities specified in this section. EPA will not attempt to make any inspections which it has been informed that local foreign law prohibits.

[59 FR 31335, June 17, 1994. Redesignated and amended at 63 FR 56996, 57020, Oct. 23, 1998]

§ 89.507 Sample selection.

(a) Engines comprising a test sample will be selected at the location and in the manner specified in the test order. If a manufacturer determines that the test engines cannot be selected in the manner specified in the test order, an

alternative selection procedure may be employed, provided the manufacturer requests approval of the alternative procedure prior to the start of test sample selection, and the Administrator approves the procedure.

(b) The manufacturer must assemble the test engines of the family selected for testing using its normal mass production process for engines to be distributed into commerce. If, between the time the manufacturer is notified of a test order and the time the manufacturer finishes selecting test engines, the manufacturer implements any change(s) in its production processes, including quality control, which may reasonably be expected to affect the emissions of the engines selected, then the manufacturer must, during the audit, inform the Administrator of such changes. If the test engines are selected at a location where they do not have their operational and emission control systems installed, the test order will specify the manner and location for selection of components to complete assembly of the engines. The manufacturer must assemble these components onto the test engines using normal assembly and quality control procedures as documented by the manufacturer.

(c) No quality control, testing, or assembly procedures will be used on the test engine or any portion thereof, including parts and subassemblies, that have not been or will not be used during the production and assembly of all other engines of that family, unless the Administrator approves the modification in assembly procedures pursuant to paragraph (b) of this section.

(d) The test order may specify that an EPA enforcement officer(s) or authorized representative(s), rather than the manufacturer, select the test engines according to the method specified in the test order.

(e) The order in which test engines are selected determines the order in which test results are to be used in applying the sampling plan in accordance with § 89.510.

(f) The manufacturer must keep on hand all untested engines, if any, comprising the test sample until a pass or fail decision is reached in accordance with § 89.510(e). The manufacturer may ship any tested engine which has not failed the requirements as set forth in § 89.510(b). However, once the manufacturer ships any test engine, it relinquishes the prerogative to conduct retests as provided in § 89.508(i).

[59 FR 31335, June 17, 1994. Redesignated at 63 FR 56996, Oct. 23, 1998]

§ 89.508 Test procedures.

(a)(1) For nonroad engines subject to the provisions of this subpart, the prescribed test procedures are the nonroad engine 8-mode test procedure as described in subpart E of this part, the federal smoke test as described in part 86, subpart I of this chapter, and the particulate test procedure as adopted in the California Regulations for New 1996 and Later Heavy-Duty Off-Road Diesel Cycle Engines. This procedure is incorporated by reference. See § 89.6.

(2) The Administrator may, on the basis of a written application by a manufacturer, prescribe test procedures other than those specified in paragraph (a)(1) of this section for any nonroad engine he or she determines is not susceptible to satisfactory testing using the procedures specified in paragraph (a)(1) of this section.

(b)(1) The manufacturer may not adjust, repair, prepare, or modify the engines selected for testing and may not perform any emission tests on engines selected for testing pursuant to the test order unless this adjustment, repair, preparation, modification, and/or tests are documented in the manufacturer's engine assembly and inspection procedures and are actually performed or unless these adjustments and/or tests are required or permitted under this subpart or are approved in advance by the Administrator.

(2) The Administrator may adjust or cause to be adjusted any engine parameter which the Administrator has determined to be subject to adjustment for certification and Selective Enforcement Audit testing in accordance with § 89.108, to any setting within the physically adjustable range of that parameter, as determined by the Administrator in accordance with § 89.108, prior to the performance of any tests. However, if the idle speed parameter is one which the Administrator has determined to be subject to adjustment, the

Administrator may not adjust it to any setting which causes a lower engine idle speed than would have been possible within the physically adjustable range of the idle speed parameter if the manufacturer had accumulated 125 hours of service on the engine under paragraph (c) of this section, all other parameters being identically adjusted for the purpose of the comparison. The manufacturer may be requested to supply information needed to establish an alternate minimum idle speed. The Administrator, in making or specifying these adjustments, may consider the effect of the deviation from the manufacturer's recommended setting on emission performance characteristics as well as the likelihood that similar settings will occur on in-use engines. In determining likelihood, the Administrator may consider factors such as, but not limited to, the effect of the adjustment on engine performance characteristics and surveillance information from similar in-use engines.

(c) *Service Accumulation*. Prior to performing exhaust emission testing on an SEA test engine, the manufacturer may accumulate on each engine a number of hours of service equal to the greater of 125 hours or the number of hours the manufacturer accumulated during certification on the emission data engine corresponding to the family specified in the test order.

(1) Service accumulation must be performed in a manner using good engineering judgment to obtain emission results representative of normal production engines. This service accumulation must be consistent with the new engine break-in instructions contained in the applicable owner's manual.

(2) The manufacturer must accumulate service at a minimum rate of 16 hours per engine during each 24-hour period, unless otherwise approved by the Administrator.

(i) The first 24-hour period for service begins as soon as authorized checks, inspections, and preparations are completed on each engine.

(ii) The minimum service or mileage accumulation rate does not apply on weekends or holidays.

(iii) If the manufacturer's service or target is less than the minimum rate specified (16 hours per day), then the minimum daily accumulation rate is equal to the manufacturer's service target.

(3) Service accumulation must be completed on a sufficient number of test engines during consecutive 24-hour periods to assure that the number of engines tested per day fulfills the requirements of paragraphs (g)(1) and (g)(2) of this section.

(d) The manufacturer may not perform any maintenance on test engines after selection for testing, nor may the Administrator allow deletion of any engine from the test sequence, unless requested by the manufacturer and approved by the Administrator before any engine maintenance or deletion.

(e) The manufacturer must expeditiously ship test engines from the point of selection to the test facility. If the test facility is not located at or in close proximity to the point of selection, the manufacturer must assure that test engines arrive at the test facility within 24 hours of selection. The Administrator may approve more time for shipment based upon a request by the manufacturer accompanied by a satisfactory justification.

(f) If an engine cannot complete the service accumulation or an emission test because of a malfunction, the manufacturer may request that the Administrator authorize either the repair of that engine or its deletion from the test sequence.

(g) Whenever a manufacturer conducts testing pursuant to a test order issued under this subpart, the manufacturer must notify the Administrator within one working day of receipt of the test order as to which test facility will be used to comply with the test order. If no test cells are available at a desired facility, the manufacturer must provide alternate testing capability satisfactory to the Administrator.

(1) A manufacturer with projected nonroad engine sales for the United States market for the applicable year of 7,500 or greater must complete emission testing at a minimum rate of two engines per 24-hour period, including each voided test and each smoke test.

(2) A manufacturer with projected nonroad engine sales for the United States market for the applicable year

of less than 7,500 must complete emission testing at a minimum rate of one engine per 24-hour period, including each voided test and each smoke test.

(3) The Administrator may approve a lower daily rate of emission testing based upon a request by a manufacturer accompanied by a satisfactory justification.

(h) The manufacturer must perform test engine selection, shipping, preparation, service accumulation, and testing in such a manner as to assure that the audit is performed in an expeditious manner.

(i) *Retesting*. (1) The manufacturer may retest any engines tested during a Selective Enforcement Audit once a fail decision for the audit has been reached in accordance with § 89.510(e).

(2) The Administrator may approve retesting at other times based upon a request by the manufacturer accompanied by a satisfactory justification.

(3) The manufacturer may retest each engine a total of three times. The manufacturer must test each engine or vehicle the same number of times. The manufacturer may accumulate additional service before conducting a retest, subject to the provisions of paragraph (c) of this section.

(j) A manufacturer must test engines with the test procedure specified in subpart E of this part to demonstrate compliance with the exhaust emission standard (or applicable FEL) for oxides of nitrogen. If alternate procedures were used in certification pursuant to § 89.114, then those alternate procedures must be used.

[59 FR 31335, June 17, 1994. Redesignated at 63 FR 56996, Oct. 23, 1998]

§ 89.509 Calculation and reporting of test results.

(a) Initial test results are calculated following the applicable test procedure specified in § 89.508(a). The manufacturer rounds these results, in accordance with ASTM E29–93a, to the number of decimal places contained in the applicable emission standard expressed to one additional significant figure. This procedure has been incorporated by reference. See § 89.6.

(b) Final test results are calculated by summing the initial test results derived in paragraph (a) of this section for each test engine, dividing by the number of tests conducted on the engine, and rounding in accordance with the procedure specified in paragraph (a) of this section to the same number of decimal places contained in the applicable standard expressed to one additional significant figure.

(c) Within five working days after completion of testing of all engines pursuant to a test order, the manufacturer must submit to the Administrator a report which includes the following information:

(1) The location and description of the manufacturer's exhaust emission test facilities which were utilized to conduct testing reported pursuant to this section;

(2) The applicable standards and/or FEL against which the engines were tested;

(3) A description of the engine and its associated emission-related component selection method used;

(4) For each test conducted;

(i) Test engine description, including:

(A) Configuration and engine family identification;

(B) Year, make, and build date;

(C) Engine identification number; and

(D) Number of hours of service accumulated on engine prior to testing;

(ii) Location where service accumulation was conducted and description of accumulation procedure and schedule;

(iii) Test number, date, test procedure used, initial test results before and after rounding, and final test results for all exhaust emission tests, whether valid or invalid, and the reason for invalidation, if applicable;

(iv) A complete description of any modification, repair, preparation, maintenance, and/or testing which was performed on the test engine and has not been reported pursuant to any other paragraph of this subpart and will not be performed on all other production engines;

(v) Where an engine was deleted from the test sequence by authorization of the Administrator, the reason for the deletion;

(vi) Any other information the Administrator may request relevant to the determination as to whether the new engines being manufactured by the

manufacturer do in fact conform with the regulations with respect to which the certificate of conformity was issued; and

(5) The following statement and endorsement:

This report is submitted pursuant to sections 213 and 208 of the Clean Air Act. This Selective Enforcement Audit was conducted in complete conformance with all applicable regulations under 40 CFR part 89 *et seq.* and the conditions of the test order. No emission-related changes to production processes or quality control procedures for the engine family tested have been made between receipt of the test order and conclusion of the audit. All data and information reported herein is, to the best of (Company Name) knowledge, true and accurate. I am aware of the penalties associated with violations of the Clean Air Act and the regulations thereunder. (Authorized Company Representative.)

[59 FR 31335, June 17, 1994. Redesignated and amended at 63 FR 56996, 57020, Oct. 23, 1998]

§ 89.510 Compliance with acceptable quality level and passing and failing criteria for selective enforcement audits.

(a) The prescribed acceptable quality level is 40 percent.

(b) A failed engine is one whose final test results pursuant to § 89.509(b), for one or more of the applicable pollutants, exceed the applicable emission standard or family emission level.

(c) The manufacturer must test engines comprising the test sample until a pass decision is reached for all pollutants or a fail decision is reached for one pollutant. A pass decision is reached when the cumulative number of failed engines, as defined in paragraph (b) of this section, for each pollutant is less than or equal to the pass decision number, as defined in paragraph (d) of this section, appropriate to the cumulative number of engines tested. A fail decision is reached when the cumulative number of failed engines for one or more pollutants is greater than or equal to the fail decision number, as defined in paragraph (d) of this section, appropriate to the cumulative number of engines tested.

(d) The pass and fail decision numbers associated with the cumulative number of engines tested are determined by using the tables in appendix A to this subpart, ''Sampling Plans for Selective Enforcement Auditing of Nonroad Engines,'' appropriate to the projected sales as made by the manufacturer in its report to EPA under § 89.505(c)(1). In the tables in appendix A to this subpart, sampling plan ''stage'' refers to the cumulative number of engines tested. Once a pass or fail decision has been made for a particular pollutant, the number of engines with final test results exceeding the emission standard for that pollutant shall not be considered any further for the purposes of the audit.

(e) Passing or failing of an SEA occurs when the decision is made on the last engine required to make a decision under paragraph (c) of this section.

(f) The Administrator may terminate testing earlier than required in paragraph (c) of this section.

[59 FR 31335, June 17, 1994. Redesignated at 63 FR 56996, Oct. 23, 1998]

§ 89.511 Suspension and revocation of certificates of conformity.

(a) The certificate of conformity is suspended with respect to any engine failing pursuant to paragraph (b) of § 89.510 effective from the time that testing of that engine is completed.

(b) The Administrator may suspend the certificate of conformity for a family which does not pass an SEA, pursuant to paragraph § 89.510(c), based on the first test or all tests conducted on each engine. This suspension will not occur before ten days after failure of the audit, unless the manufacturer requests an earlier suspension.

(c) If the results of testing pursuant to these regulations indicate that engines of a particular family produced at one plant of a manufacturer do not conform to the regulations with respect to which the certificate of conformity was issued, the Administrator may suspend the certificate of conformity with respect to that family for engines manufactured by the manufacturer at all other plants.

(d) Notwithstanding the fact that engines described in the application may be covered by a certificate of conformity, the Administrator may suspend such certificate immediately in whole or in part if the Administrator finds any one of the following infractions to be substantial:

(1) The manufacturer refuses to comply with the provisions of a test order issued by the Administrator under § 89.503.

(2) The manufacturer refuses to comply with any of the requirements of this subpart.

(3) The manufacturer submits false or incomplete information in any report or information provided to the Administrator under this subpart.

(4) The manufacturer renders inaccurate any test data submitted under this subpart.

(5) An EPA enforcement officer(s) or EPA authorized representative(s) is denied the opportunity to conduct activities related to entry and access as authorized in this subpart and a warrant or court order is presented to the manufacturer or the party in charge of a facility in question.

(6) An EPA enforcement officer(s) or EPA authorized representative(s) is unable to conduct activities related to entry and access as authorized in § 89.506 because a manufacturer has located a facility in a foreign jurisdiction where local law prohibits those activities.

(e) The Administrator must notify the manufacturer in writing of any suspension or revocation of a certificate of conformity in whole or in part; a suspension or revocation is effective upon receipt of the notification or ten days, except that the certificate is immediately suspended with respect to any failed engines as provided for in paragraph (a) of this section.

(f) The Administrator may revoke a certificate of conformity for a family when the certificate has been suspended pursuant to paragraph (b) or (c) of this section if the proposed remedy for the nonconformity, as reported by the manufacturer to the Administrator, is one requiring a design change or changes to the engine and/or emission control system as described in the application for certification of the affected family.

(g) Once a certificate has been suspended for a failed engine, as provided for in paragraph (a) of this section, the manufacturer must take the following actions before the certificate is reinstated for that failed engine:

(1) Remedy the nonconformity.

(2) Demonstrate that the engine conforms to applicable standards or family emission levels by retesting the engine in accordance with these regulations.

(3) Submit a written report to the Administrator, after successful completion of testing on the failed engine, which contains a description of the remedy and test results for each engine in addition to other information that may be required by this part.

(h) Once a certificate for a failed family has been suspended pursuant to paragraph (b) or (c) of this section, the manufacturer must take the following actions before the Administrator will consider reinstating the certificate:

(1) Submit a written report to the Administrator which identifies the reason for the noncompliance of the engines, describes the proposed remedy, including a description of any proposed quality control and/or quality assurance measures to be taken by the manufacturer to prevent future occurrences of the problem, and states the date on which the remedies will be implemented.

(2) Demonstrate that the engine family for which the certificate of conformity has been suspended does in fact comply with these regulations by testing engines selected from normal production runs of that engine family, at the plant(s), port facility(ies) or associated storage facility(ies) specified by the Administrator, in accordance with the conditions specified in the initial test order. If the manufacturer elects to continue testing individual engines after suspension of a certificate, the certificate is reinstated for an engine actually determined to be in conformance with the applicable standards or family emission levels through testing in accordance with the applicable test procedures, provided that the Administrator has not revoked the certificate pursuant to paragraph (f) of this section.

(i) Once the certificate for a family has been revoked under paragraph (f) of this section and the manufacturer desires to continue introduction into commerce of a modified version of that family, the following actions must be taken before the Administrator may consider issuing a certificate for that modified family:

(1) If the Administrator determines that the proposed change(s) in engine design may have an effect on emission performance deterioration, the Administrator will notify the manufacturer, within five working days after receipt of the report in paragraph (g) of this section, whether subsequent testing under this subpart is sufficient to evaluate the proposed change or changes or whether additional testing is required; and

(2) After implementing the change or changes intended to remedy the nonconformity, the manufacturer must demonstrate that the modified engine family does in fact conform with these regulations by testing engines selected from normal production runs of that modified engine family in accordance with the conditions specified in the initial test order. If the subsequent audit results in passing of the audit, the Administrator will reissue the certificate or issue a new certificate, as the case may be, to include that family, provided that the manufacturer has satisfied the testing requirements of paragraph (i)(1) of this section. If the subsequent audit is failed, the revocation remains in effect. Any design change approvals under this subpart are limited to the family affected by the test order.

(j) At any time subsequent to an initial suspension of a certificate of conformity for a test engine pursuant to paragraph (a) of this section, but not later than 15 days (or such other period as may be allowed by the Administrator) after notification of the Administrator's decision to suspend or revoke a certificate of conformity in whole or in part pursuant to paragraph (b), (c), or (f) of this section, a manufacturer may request a hearing as to whether the tests have been properly conducted or any sampling methods have been properly applied.

(k) Any suspension of a certificate of conformity under paragraph (d) of this section:

(1) will be in writing and will include the offer of an opportunity for a hearing conducted in accordance with §§ 89.512, 89.513, and 89.514 and

(2) need not apply to engines no longer in the hands of the manufacturer.

(l) After the Administrator suspends or revokes a certificate of conformity pursuant to this section and prior to the commencement of a hearing under § 89.512, if the manufacturer demonstrates to the Administrator's satisfaction that the decision to suspend, revoke, or void the certificate was based on erroneous information, the Administrator will reinstate the certificate.

(m) To permit a manufacturer to avoid storing non-test engines when conducting an audit of a family subsequent to a failure of an SEA and while reauditing of the failed family, it may request that the Administrator conditionally reinstate the certificate for that family. The Administrator may reinstate the certificate subject to the condition that the manufacturer consents to recall all engines of that family produced from the time the certificate is conditionally reinstated if the family fails the subsequent audit at the level of the standard and to remedy any nonconformity at no expense to the owner.

[59 FR 31335, June 17, 1994. Redesignated at 63 FR 56996, Oct. 23, 1998]

§ 89.512 Request for public hearing.

(a) If the manufacturer disagrees with the Administrator's decision under § 89.511 (b), (c), (d), or (f) to suspend or revoke a certificate or disputes the basis for an automatic suspension pursuant to § 89.511 (a), the manufacturer may request a public hearing.

(b) The manufacturer's request must be filed with the Administrator not later than 15 days after the Administrator's notification of the decision to suspend or revoke, unless otherwise specified by the Administrator. The manufacturer must simultaneously serve two copies of this request upon the Director of the Engine Programs and Compliance Division and file two copies with the Hearing Clerk of the Agency. Failure of the manufacturer to request a hearing within the time provided constitutes a waiver of the right to a hearing. Subsequent to the expiration of the period for requesting a hearing as of right, the Administrator may, at her or his discretion and for good cause shown, grant the manufacturer a

hearing to contest the suspension or revocation.

(c) The manufacturer's request for a public hearing must include:

(1) A statement as to which engine configuration(s) within a family is to be the subject of the hearing;

(2) A concise statement of the issues to be raised by the manufacturer at the hearing, except that in the case of the hearing requested under § 89.511(j), the hearing is restricted to the following issues:

(i) Whether tests have been properly conducted, specifically, whether the tests were conducted in accordance with applicable regulations under this part and whether test equipment was properly calibrated and functioning;

(ii) Whether sampling plans have been properly applied, specifically, whether sampling procedures specified in appendix A of this subpart were followed and whether there exists a basis for distinguishing engines produced at plants other than the one from which engines were selected for testing which would invalidate the Administrator's decision under § 89.511(c);

(3) A statement specifying reasons why the manufacturer believes it will prevail on the merits of each of the issues raised; and

(4) A summary of the evidence which supports the manufacturer's position on each of the issues raised.

(d) A copy of all requests for public hearings will be kept on file in the Office of the Hearing Clerk and will be made available to the public during Agency business hours.

[59 FR 31335, June 17, 1994. Redesignated and amended at 63 FR 56996, 57020, Oct. 23, 1998]

§ 89.513 Administrative procedures for public hearing.

(a) The Presiding Officer is an Administrative Law Judge appointed pursuant to 5 U.S.C. 3105 (see also 5 CFR part 930 as amended).

(b) The Judicial Officer is an officer or employee of the Agency appointed as a Judicial Officer by the Administrator, pursuant to this section, who meets the qualifications and performs functions as follows:

(1) *Qualifications.* A Judicial Officer may be a permanent or temporary employee of the Agency who performs other duties for the Agency. The Judicial Officer may not be employed by the Office of Enforcement or have any connection with the preparation or presentation of evidence for a hearing held pursuant to this subpart. The Judicial Officer must be a graduate of an accredited law school and a member in good standing of a recognized Bar Association of any state or the District of Columbia.

(2) *Functions.* The Administrator may consult with the Judicial Officer or delegate all or part of the Administrator's authority to act in a given case under this section to a Judicial Officer, provided that this delegation does not preclude the Judicial Officer from referring any motion or case to the Administrator when the Judicial Officer determines such referral to be appropriate.

(c) For the purposes of this section, one or more Judicial Officers may be designated. As work requires, a Judicial Officer may be designated to act for the purposes of a particular case.

(d) *Summary decision.* (1) In the case of a hearing requested under § 89.511(j), when it clearly appears from the data and other information contained in the request for a hearing that no genuine and substantial question of fact or law exists with respect to the issues specified in § 89.512(c)(2), the Administrator may enter an order denying the request for a hearing and reaffirming the original decision to suspend or revoke a certificate of conformity.

(2) In the case of a hearing requested under § 89.512 to challenge a suspension of a certificate of conformity for the reasons specified in § 89.511(d), when it clearly appears from the data and other information contained in the request for the hearing that no genuine and substantial question of fact or law exists with respect to the issue of whether the refusal to comply with the provisions of a test order or any other requirement of § 89.503 was caused by conditions and circumstances outside the control of the manufacturer, the Administrator may enter an order denying the request for a hearing and suspending the certificate of conformity.

(3) Any order issued under paragraph (d)(1) or (d)(2) of this section has the

force and effect of a final decision of the Administrator, as issued pursuant to § 89.515.

(4) If the Administrator determines that a genuine and substantial question of fact or law does exist with respect to any of the issues referred to in paragraphs (d)(1) and (d)(2) of this section, the Administrator will grant the request for a hearing and publish a notice of public hearing in the FEDERAL REGISTER or by such other means as the Administrator finds appropriate to provide notice to the public.

(e) *Filing and service.* (1) An original and two copies of all documents or papers required or permitted to be filed pursuant to this section and § 89.512(c) must be filed with the Hearing Clerk of the Agency. Filing is considered timely if mailed, as determined by the postmark, to the Hearing Clerk within the time allowed by this section and § 89.512(b). If filing is to be accomplished by mailing, the documents must be sent to the address set forth in the notice of public hearing referred to in paragraph (d)(4) of this section.

(2) To the maximum extent possible, testimony will be presented in written form. Copies of written testimony will be served upon all parties as soon as practicable prior to the start of the hearing. A certificate of service will be provided on or accompany each document or paper filed with the Hearing Clerk. Documents to be served upon the Director of the Engine Programs and Compliance Division must be sent by registered mail to: Director, Engine Programs and Compliance Division (6405–J), U.S. Environmental Protection Agency, 1200 Pennsylvania Ave., NW., Washington, DC 20460. Service by registered mail is complete upon mailing.

(f) *Computation of time.* (1) In computing any period of time prescribed or allowed by this section, except as otherwise provided, the day of the act or event from which the designated period of time begins to run is not included. Saturdays, Sundays, and federal legal holidays are included in computing the period allowed for the filing of any document or paper, except that when the period expires on a Saturday, Sunday, or federal legal holiday, the period is extended to include the next following business day.

(2) A prescribed period of time within which a party is required or permitted to do an act is computed from the time of service, except that when service is accomplished by mail, three days will be added to the prescribed period.

(g) *Consolidation.* The Administrator or the Presiding Officer in his discretion may consolidate two or more proceedings to be held under this section for the purpose of resolving one or more issues whenever it appears that consolidation will expedite or simplify consideration of these issues. Consolidation does not affect the right of any party to raise issues that could have been raised if consolidation had not occurred.

(h) *Hearing date.* To the extent possible hearings under § 89.512 will be scheduled to commence within 14 days of receipt of the application in § 89.512.

[59 FR 31335, June 17, 1994. Redesignated and amended at 63 FR 56996, 57020, Oct. 23, 1998]

§ 89.514 Hearing procedures.

The procedures provided in § 86.1014–84 (i) to (s) apply for hearings requested pursuant to § 89.512, suspension, revocation, or voiding of a certificate of conformity.

[59 FR 31335, June 17, 1994. Redesignated at 63 FR 56996, Oct. 23, 1998]

§ 89.515 Appeal of hearing decision.

The procedures provided in § 86.1014–84 (t) to (aa) apply for appeals filed with respect to hearings held pursuant to § 89.514.

[59 FR 31335, June 17, 1994. Redesignated at 63 FR 56996, Oct. 23, 1998]

§ 89.516 Treatment of confidential information.

The provisions for treatment of confidential information as described in § 89.7 apply.

[59 FR 31335, June 17, 1994. Redesignated at 63 FR 56996, Oct. 23, 1998]

APPENDIX A TO SUBPART F OF PART 89—SAMPLING PLANS FOR SELECTIVE ENFORCEMENT AUDITING OF NONROAD ENGINES

TABLE 1—SAMPLING PLAN CODE LETTER

Annual engine family sales	Code letter
20–50	AA[1]
20–99	A
100–299	B
300–299	C
500 or greater	D

[1] A manufacturer may optionally use either the sampling plan for code letter ''AA'' or sampling plan for code letter ''A'' for Selective Enforcement Audits of engine families with annual sales between 20 and 50 engines. Additionally, the manufacturer may switch between these plans during the audit.

TABLE 2—SAMPLING PLAN FOR CODE LETTER ''AA''

[Sample inspection criteria]

Stage	Pass No.	Fail No.
1	(1)	(2)
2	(1)	(2)
3	0	(2)
4	0	(2)
5	1	5
6	1	6
7	2	6
8	2	7
9	3	7
10	3	8
11	4	8
12	4	9
13	5	9
14	5	10
15	6	10
16	6	10
17	7	10
18	8	10
19	8	10
20	9	10

[1] Test sample passing not permitted at this stage.
[2] Test sample failure not permitted at this stage.

TABLE 3—SAMPLING PLAN FOR CODE LETTER ''A''

[Sample inspection criteria]

Stage	Pass No.	Fail No.
1	(1)	(2)
2	(1)	(2)
3	(1)	(2)
4	0	(2)
5	0	(2)
6	1	6
7	1	7
8	2	7
9	2	8
10	3	8
11	3	8
12	4	9
13	5	10
14	5	10
15	6	11
16	6	11
17	7	12
18	7	12

TABLE 3—SAMPLING PLAN FOR CODE LETTER ''A''—Continued

[Sample inspection criteria]

Stage	Pass No.	Fail No.
19	8	13
20	8	13
21	9	14
22	10	14
23	10	15
24	11	15
25	11	16
26	12	16
27	12	17
28	13	17
29	14	17
30	16	17

[1] Test sample passing not permitted at this stage.
[2] Test sample failure not permitted at this stage.

TABLE 4—SAMPLING PLAN FOR CODE LETTER ''B''

[Sample Inspection Criteria]

Stage	Pass No.	Fail No.
1	(1)	(2)
2	(1)	(2)
3	(1)	(2)
4	(1)	(2)
5	0	(2)
6	1	6
7	1	7
8	2	7
9	2	8
10	3	8
11	3	9
12	4	9
13	4	10
14	5	10
15	5	11
16	6	12
17	6	12
18	7	13
19	8	13
20	8	14
21	9	14
22	9	15
23	10	15
24	10	16
25	11	16
26	11	17
27	12	17
28	12	18
29	13	18
30	13	19
31	14	19
32	14	20
33	15	20
34	16	21
35	16	21
36	17	22
37	17	22
38	18	22
39	18	22
40	21	22

[1] Test sample passing not permitted at this stage.
[2] Test sample failure not permitted at this stage.

TABLE 5—SAMPLING PLAN FOR CODE LETTER "C"

[Sample Inspection Criteria]

Stage	Pass No.	Fail No.
1	(1)	(2)
2	(1)	(2)
3	(1)	(2)
4	(1)	(2)
5	0	(2)
6	0	6
7	1	7
8	2	7
9	2	8
10	3	9
11	3	9
12	4	10
13	4	10
14	5	11
15	5	11
16	6	12
17	6	12
18	7	13
19	7	13
20	8	14
21	8	14
22	9	15
23	10	15
24	10	16
25	11	16
26	11	17
27	12	17
28	12	18
29	13	18
30	13	19
31	14	19
32	14	20
33	15	20
34	15	21
35	16	21
36	16	22
37	17	22
38	18	23
39	18	23
40	19	24
41	19	24
42	20	25
43	20	25
44	21	26
45	21	27
46	22	27
47	22	27
48	23	27
49	23	27
50	26	27

[1] Test sample passing not permitted at this stage.
[2] Test sample failure not permitted at this stage.

TABLE 6—SAMPLING PLAN FOR CODE LETTER "D"

[Sample Inspection Criteria]

Stage	Pass No.	Fail No.
1	(1)	(2)
2	(1)	(2)
3	(1)	(2)
4	(1)	(2)
5	0	(2)
6	0	6
7	1	7
8	2	8
9	2	8

TABLE 6—SAMPLING PLAN FOR CODE LETTER "D"—Continued

[Sample Inspection Criteria]

Stage	Pass No.	Fail No.
10	3	9
11	3	9
12	4	10
13	4	10
14	5	11
15	5	11
16	6	12
17	6	12
18	7	13
19	7	13
20	8	14
21	8	14
22	9	15
23	9	15
24	10	16
25	11	16
26	11	17
27	12	17
28	12	18
29	13	19
30	13	19
31	14	20
32	14	20
33	15	21
34	15	21
35	16	22
36	16	22
37	17	23
38	17	23
39	18	24
40	18	24
41	19	25
42	19	26
43	20	26
44	21	27
45	21	27
46	22	28
47	22	28
48	23	29
49	23	29
50	24	30
51	24	30
52	25	31
53	25	31
54	26	32
55	26	32
56	27	33
57	27	33
58	28	33
59	28	33
60	32	33

[1] Test sample passing not permitted at this stage.
[2] Test sample failure not permitted at this stage.

Subpart G—Importation of Nonconforming Nonroad Engines

§ 89.601 Applicability.

(a) Except where otherwise indicated, this subpart is applicable to nonroad engines for which the Administrator has promulgated regulations under this part prescribing emission standards and nonroad vehicles and equipment containing such nonroad engines that

are offered for importation or imported into the United States, but which engines, at the time of conditional importation, are not covered by certificates of conformity issued under section 213 and section 206(a) of the Clean Air Act as amended (that is, which are nonconforming nonroad engines as defined in § 89.602), and this part. Compliance with regulations under this subpart does not relieve any person or entity from compliance with other applicable provisions of the Clean Air Act.

(b) Regulations prescribing further procedures for the importation of nonroad engines and nonroad vehicles and equipment into the customs territory of the United States, as defined in 19 U.S.C. 1202, are set forth in U.S. Bureau of Customs regulations.

(c) For the purposes of this subpart, the term ''nonroad engine'' includes all nonroad engines incorporated into nonroad equipment or nonroad vehicles at the time they are imported or offered for import into the United States.

[59 FR 31335, June 17, 1994. Redesignated at 63 FR 56996, Oct. 23, 1998]

§ 89.602 Definitions.

The definitions in subpart A of this part apply to this subpart. The following definitions also apply to this subpart.

Certificate of conformity. The document issued by the Administrator under section 213 and section 206(a) of the Act.

Currently valid certificate of conformity. A certificate of conformity for which the current date is within the effective period as specified on the certificate of conformity, and which has not been withdrawn, superseded, voided, suspended, revoked, or otherwise rendered invalid.

Fifteen working day hold period. The period of time between a request for final admission and the automatic granting of final admission (unless EPA intervenes) for a nonconforming nonroad engine conditionally imported pursuant to § 89.605 or § 89.609. Day one of the hold period is the first working day (see definition for ''working day'' in this section) after the Engine Programs and Compliance Division of EPA receives a complete and valid application for final admission.

Independent commercial importer (ICI). An importer who is not an original engine manufacturer (OEM) (see definition below), but is the entity in whose name a certificate of conformity for a class of nonroad engines has been issued.

Model year for imported engines. The manufacturer's annual production period (as determined by the Administrator) which includes January 1 of the calendar year; provided, that if the manufacturer has no annual production period, the term ''model year'' means the calendar year in which a nonroad engine is modified. An independent commercial importer (ICI) is deemed to have produced a nonroad engine when the ICI has modified (including labeling) the nonconforming nonroad engine to meet applicable emission requirements.

Nonconforming nonroad engine. A nonroad engine which is not covered by a certificate of conformity prior to final or conditional admission (or for which such coverage has not been adequately demonstrated to EPA) and which has not been finally admitted into the United States under the provisions of § 89.605 or § 89.609.

Original engine manufacturer (OEM). The entity which originally manufactured the nonroad engine.

Original production (OP) year. The calendar year in which the nonroad engine was originally produced by the OEM.

Original production (OP) years old. The age of a nonroad engine as determined by subtracting the original production year of the nonroad engine from the calendar year of importation.

Production changes. Those changes in nonroad engine configuration, equipment, or calibration which are made by an OEM or ICI in the course of nonroad engine production and required to be reported under § 89.123.

United States. United States includes the customs territory of the United States as defined in 19 U.S.C. 1202, and the Virgin Islands, Guam, American Samoa, and the Commonwealth of the Northern Mariana Islands.

Useful life. A period of time as specified in subpart B of this part which for a nonconforming nonroad engine begins at the time of resale (for a nonroad engine owned by the ICI at the

time of importation) or release to the owner (for a nonroad engine not owned by the ICI at the time of importation) of the nonroad engine by the ICI after modification and/or testing pursuant to § 89.605 or § 89.609.

Working day. Any day on which federal government offices are open for normal business. Saturdays, Sundays, and official federal holidays are not working days.

[59 FR 31335, June 17, 1994. Redesignated and amended at 63 FR 56996, 57021, Oct. 23, 1998]

§ 89.603 General requirements for importation of nonconforming nonroad engines.

(a) A nonconforming nonroad engine offered for importation into the United States is to be imported only by an Independent Commercial Importer (ICI) who is a holder of a currently valid certificate of conformity unless an exemption or exclusion is granted by the Administrator under § 89.611 of this subpart. For a nonroad engine imported pursuant to § 89.605, the ICI must hold a currently valid certificate of conformity for that specific nonroad engine model.

(b) Any nonroad engine imported into the United States must have a legible unique engine identification number permanently affixed to or engraved on the engine.

(c) Final admission may not be granted unless:

(1) The nonroad engine is covered by a certificate of conformity issued under subpart B of this part in the name of the ICI and the ICI has complied with all requirements of § 89.605; or

(2) The nonroad engine is modified and emission tested in accordance with the provisions of § 89.609 and the ICI has complied with all other requirements of § 89.609; or

(3) The nonroad engine is exempted or excluded under § 89.611.

(d) The ICI must submit to the Engine Programs and Compliance Division of EPA a copy of all approved applications for certification used to obtain certificates of conformity for the purpose of importing nonconforming nonroad engines pursuant to § 89.605 or § 89.609. In addition, the ICI must submit to the Engine Programs and Compliance Division a copy of all approved production changes implemented pursuant to § 89.605 or subpart B of this part. Documentation submitted pursuant to this paragraph (d) must be provided to the Engine Programs and Compliance Division within 10 working days of approval of the certification application (or production change) by EPA.

[59 FR 31335, June 17, 1994. Redesignated and amended at 63 FR 56996, 57021, Oct. 23, 1998]

§ 89.604 Conditional admission.

(a) A nonroad engine offered for importation under § 89.605 or § 89.609 may be conditionally admitted into the United States. These engines are refused final admission, unless at the time of conditional admission the importer has submitted to the Administrator a written report that the subject nonroad engine has been permitted conditional admission pending EPA approval of its application for final admission under § 89.605 or § 89.609. This written report is to contain the following:

(1) Identification of the importer of the nonroad engine and the importer's address, telephone number, and taxpayer identification number;

(2) Identification of the nonroad engine owner, the owner's address, telephone number, and taxpayer identification number;

(3) Identification of the nonroad engine including make, model, identification number, and original production year;

(4) Information indicating under what provision of these regulations the nonroad engine is to be imported;

(5) Identification of the place where the subject nonroad engine is to be stored until EPA approval of the importer's application to the Administrator for final admission;

(6) Authorization for EPA enforcement officers to conduct inspections or testing otherwise permitted by the Act or regulations thereunder;

(7) Identification of the Independent Commercial Importer's (ICI) certificate of conformity that permits the ICI to import that nonroad engine (for importation under § 89.605 or § 89.609); and

(8) Such other information as is deemed necessary by the Administrator.

(b) EPA will not require a U.S. Customs Service bond for a nonconforming nonroad engine which is imported under § 89.605 or § 89.609. The period of conditional admission may not exceed 120 days. Nonroad engines imported under § 89.605 or § 89.609 may not be operated during the period of conditional admission except for that operation necessary to comply with the requirements of this subpart. During the period of conditional admission applicable to § 89.605 or § 89.609, the importer must store the nonroad engine at a location where the Administrator has reasonable access to the nonroad engine for inspection.

(c) During the period of conditional admission under § 89.605 or § 89.609, an ICI may transfer responsibility of a nonroad engine to another qualified ICI for the purposes of complying with this subpart.

(1) The transferee ICI must be a holder of a currently valid certificate of conformity for the specific nonroad engine being transferred or be authorized to import the nonroad engine pursuant to § 89.609 as of the transfer date. The transferee ICI must comply with all the requirements of § 89.603, § 89.604, and either § 89.605 or § 89.609, as applicable.

(2) For the purpose of this subpart, the transferee ICI has ''imported'' the nonroad engine as of the transfer date as designated in a written record that is signed by both ICIs.

(3) The ICI that originally imported the nonroad engine is responsible for all requirements of this subpart from the actual date of importation until the date of transfer as designated in the written record. The transferee ICI is responsible for all requirements of this subpart beginning on the date of transfer.

(4) A copy of the written record is to be submitted to the Engine Programs and Compliance Division of EPA within five working days of the transfer date.

(d) Notwithstanding any other requirement of this subpart or U.S. Customs Service regulations, an ICI may also assume responsibility for the modification and testing of a nonconforming nonroad engine which was previously imported by another party. The ICI must be a holder of a currently valid certificate of conformity for that specific nonroad engine or authorized to import it pursuant to § 89.609 at the time of assuming such responsibility. The ICI must comply with all the requirements of § 89.603, § 89.604, and either § 89.605 or § 89.609, as applicable. For the purposes of this subpart, the ICI has ''imported'' the nonroad engine as of the date the ICI assumes responsibility for the modification and testing of the nonroad engine. The ICI must submit written notification to the Engine Programs and Compliance Division of EPA within 10 working days of the assumption of that responsibility.

[59 FR 31335, June 17, 1994. Redesignated and amended at 63 FR 56996, 57021, Oct. 23, 1998]

§ 89.605 Final admission of certified nonroad engines.

(a) A nonroad engine may be finally admitted into the United States upon approval of the ICI's application to the Administrator. The application is made by completing EPA forms in accordance with EPA instructions. The application contains:

(1) The information required in § 89.604(a);

(2) Information demonstrating that the nonroad engine has been modified in accordance with a valid certificate of conformity. Demonstration is made in one of the following ways:

(i) The ICI attests that the nonroad engine has been modified in accordance with the provisions of the ICI's certificate of conformity; presents to EPA a statement written by the applicable Original Engine Manufacturer that the Original Engine Manufacturer must provide to the ICI, and to EPA, information concerning production changes to the class of nonroad engines described in the ICI's application for certification; delivers to the Engine Programs and Compliance Division of EPA notification by the ICI of any production changes already implemented by the Original Engine Manufacturer at the time of application and their effect on emissions; and obtains from EPA written approval to use this demonstration option; or

(ii) The ICI attests that the nonroad engine has been modified in accordance

with the provisions of the ICI's certificate of conformity. The ICI also attests that it has conducted, within 120 days of entry, an applicable and valid emission test on every third nonroad engine imported under that certificate of conformity to demonstrate compliance with Federal emission requirements. The test is to be conducted at a laboratory located within the United States. Sequencing of the tests is determined by the date of importation of each nonroad engine beginning with the prototype nonroad engine used to obtain the applicable certificate of conformity. Should the ICI exceed a threshold of 300 nonroad engines imported under the certificate of conformity without adjustments or other changes in accordance with paragraph (a)(3) of this section, the amount of required testing is reduced to every fifth nonroad engine.

(3) The results of every emission test which the ICI conducted on the nonroad engine pursuant to paragraph (a)(2)(ii) of this section. Should a subject nonroad engine fail an emission test at any time, the following procedures are applicable:

(i) The ICI may either:

(A) Conduct one retest that involves no adjustment of the nonroad engine from the previous test (for example, adjusting the RPM, timing, air-to-fuel ratio, and so forth) other than adjustments to adjustable parameters that, upon inspection, were found to be out of tolerance. When such an allowable adjustment is made, the parameter may be reset only to the specified (that is, nominal) value (and not any other value within the tolerance band); or

(B) Initiate a change in production (production change) under the provisions of subpart B of this part that causes the nonroad engine to meet federal emission requirements.

(ii) If the ICI chooses to retest in accordance with paragraph (a)(3)(i)(A) of this section:

(A) The retests are to be completed no later than five working days subsequent to the first emission test;

(B) Should the subject nonroad engine fail the second emission test, then the ICI must initiate a change in production (a production change) under the provisions of subpart B of this part that causes the nonroad engine to meet federal emission requirements.

(iii) If the ICI chooses to initiate a change in production (a production change) under the provisions of subpart B of this part that causes the nonroad engine to meet federal requirements, a change involving adjustments of adjustable nonroad engine parameters (for example, adjusting the RPM, timing, air/fuel ratio) represents a change in the specified (that is, nominal) value to be deemed acceptable by EPA.

(iv) A production change made in accordance with this section is to be implemented on all subsequent nonroad engines imported under the certificate of conformity after the date of importation of the nonroad engine which gave rise to the production change.

(v) Commencing with the first nonroad engine receiving the production change, every third nonroad engine imported under the certificate of conformity is to be emission tested to demonstrate compliance with federal emission requirements until, as in paragraph (a)(2)(ii) of this section, a threshold of 300 nonroad engines imported under the certificate of conformity is exceeded without adjustments or other changes in accordance with paragraph (a)(3)(i)(A) of this section, at which time the amount of required emission testing is reduced to every fifth nonroad engine.

(vi) A report concerning these production changes is to be made to the Engine Programs and Compliance Division of EPA within ten working days of initiation of the production change. The cause of any failure of an emission test is to be identified, if known;

(4) The applicable deterioration factor, if any;

(5) The emission test results adjusted by the deterioration factor;

(6) Other information that may be specified by applicable regulations or on the certificate of conformity under which the nonroad engine has been modified in order to assure compliance with requirements of the Act;

(7) All information required under § 89.610 related to maintenance, warranties, and labeling;

(8) An attestation by the ICI that the ICI is responsible for the nonroad engine's compliance with federal emission requirements, regardless of whether the ICI owns the nonroad engine imported under this section;

(9) The name, address, and telephone number of the person who the ICI prefers to receive EPA notification under § 89.605(c);

(10) An attestation by the ICI that all requirements of § 89.607 and § 89.610 have been met; and

(11) Other information as is deemed necessary by the Administrator.

(b) EPA approval for final admission of a nonroad engine under this section is to be presumed not to have been granted if a requirement of this subpart has not been met. This includes, but is not limited to, properly modifying the nonroad engine to be in conformity in all material respects with the description in the application for certification or not complying with the provisions of § 89.605(a)(2) or if the final emission test results, adjusted by the deterioration factor, if applicable, do not comply with applicable emission standards.

(c) Except as provided in paragraph (b) of this section, EPA approval for final admission of a nonroad engine under this section is presumed to have been granted if the ICI does not receive oral or written notice from EPA to the contrary within 15 working days of the date that the Engine Programs and Compliance Division of EPA receives the ICI's application under paragraph (a) of this section. EPA notice of nonapproval may be made to any employee of the ICI. It is the responsibility of the ICI to ensure that the Engine Programs and Compliance Division of EPA receives the application and to confirm the date of receipt. During this 15 working day hold period, the nonroad engine is to be stored at a location where the Administrator has reasonable access to the nonroad engine for the Administrator's inspection. The storage is to be within 50 miles of the ICI's testing facility to allow the Administrator reasonable access for inspection and testing. A storage facility not meeting this criterion must be approved in writing by the Administrator prior to the submittal of the ICI's application under paragraph (a) of this section.

[59 FR 31335, June 17, 1994. Redesignated and amended at 63 FR 56996, 57021, Oct. 23, 1998]

§ 89.606 Inspection and testing of imported nonroad engines.

(a) In order to allow the Administrator to determine whether an ICI's production nonroad engines comply with applicable emission requirements or requirements of this subpart, an EPA enforcement officer or authorized representative is authorized to conduct inspections and/or tests of nonroad engines imported by the ICI. The ICI must admit an EPA enforcement officer or authorized representative during operating hours to any of the following places upon demand and upon presentation of credentials:

(1) Any facility where any nonroad engine imported by the ICI under this subpart was or is being modified, tested, or stored and

(2) Any facility where any record or other document relating to modification, testing, or storage of the nonroad engine, or required to be kept by § 89.607, is located. EPA may require inspection or testing of nonroad engines at the test facility used by the ICI or at an EPA-designated testing facility, with transportation and/or testing costs to be borne by the ICI.

(b) Upon admission to any facility referred to in paragraph (a) of this section, an EPA enforcement officer or authorized representative is allowed during operating hours:

(1) To inspect and monitor any part or aspect of activities relating to the ICI's modification, testing, and/or storage of nonroad engines imported under this subpart;

(2) To inspect and make copies of record(s) or document(s) related to modification, testing, and storage of a nonroad engine, or required by § 89.607; and

(3) To inspect and photograph any part or aspect of the nonroad engine and any component used in the assembly thereof.

(c) An EPA enforcement officer or authorized representative is to be furnished, by those in charge of a facility being inspected, with such reasonable

assistance as the officer or representative may request to help discharge any function listed in this subpart. An ICI must make arrangements with those in charge of a facility operated for its benefit to furnish such reasonable assistance without charge to EPA. Reasonable assistance includes, but is not limited to, clerical, copying, interpretation and translation services, and the making available on request of personnel of the facility being inspected during their working hours to inform the EPA enforcement officer or authorized representative of how the facility operates and to answer any questions.

(d) The requirements of paragraphs (a), (b), and (c) of this section apply whether or not the ICI owns or controls the facility in question. It is the ICI's responsibility to make such arrangements as may be necessary to assure compliance with paragraphs (a), (b), and (c) of this section. Failure to do so, or other failure to comply with paragraphs (a), (b), or (c), may result in sanctions as provided for in the Act or § 89.612(e).

(e) Duly designated enforcement officers are authorized to proceed ex parte to seek warrants authorizing the inspection or testing of the nonroad engines described in paragraph (a) of this section whether or not the enforcement officers first attempted to seek permission from the ICI or facility owner to inspect such nonroad engines.

(f) The results of the Administrator's test under this section comprise the official test data for the nonroad engine for purposes of determining whether the nonroad engine should be permitted final entry under § 89.605 or § 89.609.

[59 FR 31335, June 17, 1994. Redesignated at 63 FR 56996, Oct. 23, 1998]

§ 89.607 Maintenance of independent commercial importer's records.

(a) The Independent Commercial Importer (ICI) subject to any of the provisions of this subpart must establish and maintain adequately organized and indexed records, correspondence and other applicable documents relating to the certification, modification, test, purchase, sale, storage, registration, and importation of that nonroad engine. The ICI must retain such records for 8 years from the date of final admission or exportation of a nonconforming nonroad engine imported by the ICI. These records include, but are not limited to:

(1) The declaration required by U.S. Bureau of Customs regulations.

(2) Any documents or other written information required by a federal government agency to be submitted or retained in conjunction with the certification, importation or emission testing (if applicable) of nonroad engines;

(3) All bills of sale, invoices, purchase agreements, purchase orders, principal or agent agreements, and correspondence between the ICI and the ultimate purchaser of each nonroad engine and between any agents of the above parties;

(4) For nonroad engines imported by an ICI pursuant to § 89.605 or § 89.609, documents providing parts identification data (including calibration changes and part numbers and location of such parts on each nonroad engine) associated with the emission control system installed on each nonroad engine demonstrating that such emission control system was properly installed on such nonroad engine;

(5) For nonroad engines imported by an ICI pursuant to § 89.605 or § 89.609, documents demonstrating that, where applicable, each nonroad engine was emission tested in accordance with subpart E of this part and part 86, subpart I of this chapter;

(6) Documents providing evidence that the requirements of § 89.610 have been met;

(7) Documents providing evidence of compliance with all relevant requirements of the Clean Air Act;

(8) Documents providing evidence of the initiation of the 15 working day hold period (that is, evidence that the application submitted pursuant to § 89.605(a) or § 89.609(b) was received by EPA) for each nonroad engine imported pursuant to § 89.605 or § 89.609;

(9) For nonroad engines owned by the ICI at the time of importation, documents providing evidence of the date of sale and date of delivery to the ultimate purchaser, together with the name, address, and telephone number of the ultimate purchaser for each

nonroad engine imported pursuant to § 89.605 or § 89.609;

(10) For nonroad engines not owned by the ICI at the time of importation, documents providing evidence and date of release to the owner (including owner's name, address, and telephone number) for each nonroad engine imported pursuant to § 89.605 or § 89.609;

(11) Documents providing evidence of the date of original manufacture of the nonroad engine. The importer may substitute an alternate date in lieu of the date of original manufacture, provided that the substitution of such alternate date is approved in advance by the Administrator.

(b) The ICI is responsible for ensuring the maintenance of records required by this section, regardless of whether or not facilities used by the ICI to comply with requirements of this subpart are under the control of the ICI.

[59 FR 31335, June 17, 1994. Redesignated at 63 FR 56996, Oct. 23, 1998]

§ 89.608 "In Use" inspections and recall requirements.

(a) Nonroad engines which have been imported by an Independent Commercial Importer (ICI) pursuant to § 89.605 or § 89.609 and finally admitted by EPA may be inspected and emission tested by EPA for the recall period specified in § 89.104(b).

(b) ICIs must maintain for eight years, and provide to EPA upon request, a list of owners or ultimate purchasers of all nonroad engines imported by the ICI under this subpart.

(c) The Administrator must notify the ICI whenever the Administrator has determined that a substantial number of a class or category of the ICI's nonroad engines, although properly maintained and used, do not conform to the regulations prescribed under section 213 of the Act when in actual use throughout their useful lives. After such notification, the recall regulations at subpart H of this part govern the ICI's responsibilities. References to a manufacturer in the recall regulations apply to the ICI.

[59 FR 31335, June 17, 1994. Redesignated at 63 FR 56996, Oct. 23, 1998]

§ 89.609 Final admission of modification nonroad engines and test nonroad engines.

(a) A nonroad engine may be imported under this section by an Independent Commercial Importer (ICI) possessing a currently valid certificate of conformity only if:

(1) The nonroad engine is six original production years old or older; and

(2) The ICI's name has not been placed on a currently effective EPA list of ICIs ineligible to import such modification/test nonroad engines, as described in paragraph (e) of this section; and

(3) The ICI has a currently valid certificate of conformity for the same nonroad engine class and fuel type as the nonroad engine being imported.

(b) A nonroad engine conditionally imported under this section may be finally admitted into the United States upon approval of the ICI's application by the Administrator. The application is to be made by completing EPA forms, in accordance with EPA instructions. The ICI includes in the application:

(1) The identification information required in § 89.604;

(2) An attestation by the ICI that the nonroad engine has been modified and tested in accordance with the applicable emission tests as specified in Subpart B § 89.119(a) of this part at a laboratory within the United States;

(3) The results of all emission tests;

(4) The applicable deterioration factor assigned by EPA, if any;

(5) The emission test results adjusted by the applicable deterioration factor;

(6) All information required under § 89.610 related to maintenance, warranties, and labeling;

(7) An attestation by the ICI that the ICI is responsible for the nonroad engine's compliance with federal emission requirements, regardless of whether the ICI owns the nonroad engine imported under this section;

(8) The applicable address and telephone number of the ICI, or the name, address, and telephone number of the person who the ICI prefers to receive EPA notification under § 89.609(d);

(9) An attestation by the ICI that all requirements of § 89.607–95 and § 89.610 have been met; and

(10) Such other information as is deemed necessary by the Administrator.

(c) EPA approval for final admission of a nonroad engine under this section is presumed not to have been granted if any requirement of this subpart has not been met.

(d) Except as provided in paragraph (c) of this section, EPA approval for final admission of a nonroad engine under this section is presumed to have been granted if the ICI does not receive oral or written notice from EPA to the contrary within 15 working days of the date that the Engine Programs and Compliance Division of EPA receives the ICI's application under paragraph (b) of this section. Such EPA notice of nonapproval may be made to any employee of the ICI. It is the responsibility of the ICI to ensure that the Engine Programs and Compliance Division of EPA receives the application and to confirm the date of receipt. During this 15 working day hold period, the nonroad engine is stored at a location where the Administrator has reasonable access to the nonroad engine for the Administrator's inspection. The storage is to be within 50 miles of the ICI's testing facility to allow the Administrator reasonable access for inspection and testing. A storage facility not meeting this criterion must be approved in writing by the Administrator prior to the submittal of the ICI's application under paragraph (b) of this section.

(e) *EPA list of ICIs ineligible to import nonroad engines for modification/test.* EPA maintains a current list of ICIs who have been determined to be ineligible to import nonroad engines under this section. The determination of ineligibility is made in accordance with the criteria and procedures in § 89.612(e) of this subpart.

(f) *Inspections.* Prior to final admission, a nonroad engine imported under this section is subject to special inspections as described in § 89.606 with these additional provisions:

(1) If, in the judgment of the Administrator, a significant number of nonroad engines imported by an ICI fail to comply with emission requirements upon inspection or retest or if the ICI fails to comply with a provision of these regulations that pertain to nonroad engines imported pursuant to § 89.609, the ICI may be placed on the EPA list of ICIs ineligible to import nonroad engines under this section as specified in paragraph (e) of this section and § 89.612(e).

(2) An individual nonroad engine which fails a retest or inspection is to be repaired and retested, as applicable, to demonstrate compliance with emission requirements before final admission is granted by EPA.

(3) Unless otherwise specified by EPA, the ICI bears the costs of all retesting under this subsection, including transportation.

(g) *In-use inspection and testing.* A nonroad engine imported under this section may be tested or inspected by EPA at any time during the recall period specified in § 89.104(b), in accordance with § 89.608(a). If, in the judgment of the Administrator, a significant number of properly maintained and used nonroad engines imported by the ICI pursuant to this section fail to meet emission requirements, the name of the ICI may be placed on the EPA list of ICIs ineligible to import nonroad engines under the modification/test provision as specified in paragraph (e) of this section and § 89.612(e).

[59 FR 31335, June 17, 1994. Redesignated and amended at 63 FR 56996, 57021, Oct. 23, 1998]

§ 89.610 Maintenance instructions, warranties, emission labeling.

The provisions of this section are applicable to all nonroad engines imported under the provisions of § 89.605 or § 89.609.

(a) *Maintenance instructions.* (1) The Independent Commercial Importer (ICI) must furnish to the purchaser, or to the owner of each nonroad engine imported under § 89.605 or § 89.609 of this subpart, written instructions for the maintenance and use of the nonroad engine by the purchaser or owner. Each application for final admission of a nonroad engine is to provide an attestation that such instructions have been or will be (if the ultimate purchaser is unknown) furnished to the purchaser or owner of such nonroad engine at the time of sale or delivery. The ICI must maintain a record of having furnished such instructions.

(2) For each nonroad engine imported under § 89.609, a copy of the maintenance and use instructions is to be maintained in a file containing the records for that nonroad engine.

(3) The maintenance and use instructions are not to contain requirements more restrictive than those set forth in § 89.109 (Maintenance Instructions) and are to be in sufficient detail and clarity that a mechanic of average training and ability can maintain or repair the nonroad engine.

(4) For each nonroad engine imported pursuant to § 89.605 or § 89.609, ICIs must furnish with each nonroad engine a list of the emission control parts, emission-related parts added by the ICI, and the emission control and emission-related parts furnished by the Original Engine Manufacturer (OEM).

(5) The information required in this section to be furnished to the ultimate purchaser or owner is to be copied and maintained in a file containing the records for that nonroad engine prior to submitting each application for final admission pursuant to § 89.605(a) or § 89.609(b).

(b) *Warranties.* (1) ICIs must submit to the Engine Programs and Compliance Division of EPA sample copies (including revisions) of any warranty documents required by this section prior to importing nonroad engines under this subpart.

(2) ICIs must provide to nonroad engine owners emission warranties identical to those required by sections 207(a) of the Act. The warranty period for each nonroad engine is to commence on the date the nonroad engine is delivered by the ICI to the ultimate purchaser or owner.

(3) ICIs must provide warranty insurance coverage by a prepaid mandatory service insurance policy underwritten by an independent insurance company. The policy is to:

(i) Be subject to the approval of the Administrator if the insurance coverage is less than the required warranty;

(ii) At a minimum, provide coverage for emission-related components installed or modified by the ICI and, to the maximum extent possible, the emission-related components installed by the OEM;

(iii) Be transferable to each successive owner for the periods specified in § 89.104(c); and

(iv) Provide that in the absence of an ICI's facility being reasonably available (that is, within 50 miles) for performance of warranty repairs, the warranty repairs may be performed anywhere.

(4) ICIs must attest in each application for final admission that the warranty requirements have been met, that the mandatory insurance has been paid and is in effect, and that certificates and statements of the warranties have been or will be provided to the owner or ultimate purchaser. A copy of the warranties and evidence that the warranties are paid and in effect is to be maintained in a file containing the records for each nonroad engine prior to submitting each application for final admission pursuant to § 89.605(a) or § 89.609(b).

(c) *Emission labeling.* (1) For each nonroad engine imported pursuant to § 89.605 or § 89.609, the ICI must affix a permanent legible label which identifies each nonroad engine and also satisfies the following:

(i) The label meets all the requirements of § 89.110 and contains the following statement ''This nonroad engine was originally produced in (month and year of original production). It has been imported and modified by (ICI's name, address, and telephone number) to conform to United States emission regulations applicable to the (year) model year.''

(ii) If the nonroad engine is owned by the ICI at the time of importation, the label also states ''This nonroad engine is warranted for five years or 3000 hours of operation from the date of purchase, whichever first occurs.''

(iii) If the nonroad engine is not owned by the ICI at the time of importation, the label states ''This nonroad engine is warranted for five years or 3000 hours of operation from the date of release to the owner, whichever first occurs.''

(iv) For nonroad engines imported under § 89.609, the label clearly states in bold letters that ''This nonroad engine has not been manufactured under

a certificate of conformity but conforms to United States emission regulations under a modification/test program.'' For all nonroad engines imported pursuant to § 89.605 or § 89.609, the label contains the vacuum hose routing diagram applicable to the nonroad engines.

(2) As part of the application to the Administrator for final admission of each individual nonroad engine under § 89.609, the ICI must maintain a copy of the labels for each nonroad engine in a file containing the records for that nonroad engine prior to submitting each application for final admission. ICIs importing under § 89.605 or § 89.609 must attest to compliance with the preceding labeling requirements of this section in each application for final admission.

[59 FR 31335, June 17, 1994. Redesignated and amended at 63 FR 56996, 57021, Oct. 23, 1998]

§ 89.611 Exemptions and exclusions.

(a) Individuals, as well as ICIs, are eligible for importing nonroad engines into the United States under the provisions of this section, unless otherwise specified.

(b) Notwithstanding other requirements of this subpart, a nonroad engine entitled to one of the temporary exemptions of this paragraph may be conditionally admitted into the United States if prior written approval for the conditional admission is obtained from the Administrator. Conditional admission is to be under bond. The Administrator may request that the U.S. Customs Service require a specific bond amount to ensure compliance with the requirements of the Act and this subpart. A written request for approval from the Administrator is to contain the identification required in § 89.604(a) (except for § 89.604(a)(5)) and information that demonstrates that the importer is entitled to the exemption. Noncompliance with provisions of this section may result in the forfeiture of the total amount of the bond or exportation of the nonroad engine. The following temporary exemptions are permitted by this paragraph:

(1) *Exemption for repairs or alterations.* Upon written approval by EPA, an owner of nonroad engines may conditionally import under bond such nonroad engines solely for purpose of repair(s) or alteration(s). The nonroad engines may not be operated in the United States other than for the sole purpose of repair or alteration. They may not be sold or leased in the United States and are to be exported upon completion of the repair(s) or alteration(s).

(2) *Testing exemption.* A test nonroad engine may be conditionally imported by a person subject to the requirements of § 89.905. A test nonroad engine may be operated in the United States provided that the operation is an integral part of the test. This exemption is limited to a period not exceeding one year from the date of importation unless a request is made by the appropriate importer concerning the nonroad engine in accordance with § 89.905(f) for a subsequent one-year period.

(3) *Precertification exemption.* A prototype nonroad engine for use in applying to EPA for certification pursuant to this subpart may be conditionally imported subject to applicable provisions of § 89.906 and the following requirements:

(i) No more than one prototype nonroad engine for each engine family for which an importer is seeking certification is to be imported.

(ii) The granting of precertification exemptions by the Administrator is discretionary. Normally, no more than three outstanding precertification exemptions are allowed for each importer. No precertification exemption is allowed if the importer requesting the exemption is in noncompliance with any requirement of this subpart until the noncompliance is corrected.

(iii) Unless a certificate of conformity is issued for the prototype nonroad engine and the nonroad engine is finally admitted pursuant to the requirements of § 89.605 within 180 days from the date of entry, the total amount of the bond is to be forfeited or the nonroad engine exported unless an extension is granted by the Administrator. A request for an extension is to be in writing and received by the Administrator prior to the date that the precertification exemption expires.

(iv) Such precertification nonroad engine may not be operated in the

United States other than for the sole purpose of the precertification exemption.

(4) *Display exemptions.* (i) A nonroad engine intended solely for display may be conditionally imported subject to the requirements of § 89.907.

(ii) A display nonroad engine may be imported by any person for purposes related to a business or the public interest. Such purposes do not include collections normally inaccessible or unavailable to the public on a daily basis, display of a nonroad engine at a dealership, private use, or other purpose that the Administrator determines is not appropriate for display exemptions. A display nonroad engine may not be sold in the United States and may not be operated in the United States except for the operation incident and necessary to the display purpose.

(iii) A temporary display exemption is granted for 12 months or for the duration of the display purpose, whichever is shorter. Two extensions of up to 12 months each are available upon approval by the Administrator. In no circumstances, however, may the total period of exemption exceed 36 months. The U.S. Customs Service bonds a temporary display exemption.

(c) Notwithstanding any other requirement of this subpart, a nonroad engine may be finally admitted into the United States under this paragraph if prior written approval for such final admission is obtained from the Administrator. Conditional admission of these nonroad engines under this subpart is not permitted for the purpose of obtaining such written approval from the Administrator. A request for approval is to contain the identification information required in § 89.604(a) (except for § 89.604(a)(5)) and information that demonstrates that the importer is entitled to the exemption or exclusion. The following exemptions or exclusions are permitted by this paragraph:

(1) *National security exemption.* A nonroad engine may be imported under the national security exemption found at § 89.908.

(2) *Hardship exemption.* The Administrator may exempt on a case-by-case basis a nonroad engine from federal emission requirements to accommodate unforeseen cases of extreme hardship or extraordinary circumstances.

(3) *Exemption for nonroad engines identical to United States certified versions.*

(i) A person (including businesses) is eligible for importing a nonroad engine into the United States under the provisions of this paragraph. An exemption will be granted if the nonroad engine:

(A) is owned by the importer;

(B) is not offered for importation for the purpose of resale; and

(C) is proven to be identical, in all material respects, to a nonroad engine certified by the Original Engine Manufacturer (OEM) for sale in the United States or is proven to have been modified to be identical, in all material respects, to a nonroad engine certified by the OEM for sale in the United States according to complete written instructions provided by the OEM's United States representative, or his/her designee.

(ii) *Proof of conformity.* (A) Documentation submitted pursuant to this section for the purpose of proving conformity of individual nonroad engines is to contain sufficiently organized data or evidence demonstrating that the nonroad engine identified pursuant to § 89.604(a) is identical, in all material respects, to a nonroad engine identified in an OEM's application for certification.

(B) If the documentation does not contain all the information required by this part, or is not sufficiently organized, EPA notifies the importer of any areas of inadequacy, and that the documentation does not receive further consideration until the required information or organization is provided.

(C) If EPA determines that the documentation does not clearly or sufficiently demonstrate that a nonroad engine is eligible for importation, EPA notifies the importer in writing.

(D) If EPA determines that the documentation clearly and sufficiently demonstrates that a nonroad engine is eligible for importation, EPA grants approval for importation and notifies the importer in writing. Notwithstanding any other requirement of this subpart, the notice constitutes approval for final admission into the United States.

(d) Foreign diplomatic and military personnel may import a nonconforming nonroad engine without bond. At the time of admission, the importer must submit to the Administrator the written report required in § 89.604(a) (except for information required by § 89.604(a)(5)) and a statement from the U.S. Department of State confirming qualification for this exemption. The nonroad engine may not be sold in the United States and must be exported if the individual's diplomatic status is no longer applicable, as determined by the Department of State, unless subsequently brought into conformity in accordance with §§ 89.605, 89.609, or 89.611(c)(3).

(e) *Competition exclusion*. A nonconforming engine may be imported by any person provided the importer demonstrates to the Administrator that the engine is used to propel a vehicle used solely for competition and obtains prior written approval from the Administrator. A nonconforming engine imported pursuant to this paragraph may not be operated in the United States except for that operation incident and necessary for the competition purpose, unless subsequently brought into conformity with United States emission requirements in accordance with §§ 89.605, 89.609, or 89.611(c)(3).

(f) *Exclusions/exemptions based on date of original manufacture*. (1) Notwithstanding any other requirements of this subpart, the following nonroad engines are excluded, as determined by the engine's gross power output, from the requirements of the Act in accordance with section 213 of the Act and may be imported by any person:

(i) All nonroad engines greater than or equal to 37 kW but less than 75 kW originally manufactured prior to January 1, 1998.

(ii) All nonroad engines greater than or equal to 75 kW but less than 130 kW originally manufactured prior to January 1, 1997.

(iii) All nonroad engines greater than or equal to 130 kW but less than or equal to 560 kW originally manufactured prior to January 1, 1996.

(iv) All nonroad engines greater than 560 kW originally manufactured prior to January 1, 2000.

(2) Notwithstanding other requirements of this subpart, a nonroad engine not subject to an exclusion under § 89.611(f)(1) but greater than 20 original production (OP) years old is entitled to an exemption from the requirements of the Act, provided that it has not been modified in those 20 OP years and it is imported into the United States by an ICI. At the time of admission, the ICI must submit to the Administrator the written report required in § 89.604(a) (except for information required by § 89.604(a)(5)).

(g) An application for exemption and exclusion provided for in paragraphs (b), (c), and (e) of this section is to be mailed to: U.S. Environmental Protection Agency, Office of Mobile Sources, Engine Programs and Compliance Division (6405–J), 1200 Pennsylvania Ave., NW., Washington, DC 20460, Attention: Imports.

[59 FR 31335, June 17, 1994. Redesignated and amended at 63 FR 56996, 57022, Oct. 23, 1998]

§ 89.612 Prohibited acts; penalties.

(a) The importation of a nonroad engine, including a nonroad engine incorporated into a nonroad vehicle or nonroad equipment, which is not covered by a certificate of conformity other than in accordance with this subpart and the entry regulations of the U.S. Customs Service is prohibited. Failure to comply with this section is a violation of section 213(d) and section 203 of the Act.

(b) Unless otherwise permitted by this subpart, during a period of conditional admission, the importer of a nonroad engine may not:

(1) Register, license, or operate the nonroad engine in the United States;

(2) Sell or offer the nonroad engine for sale;

(3) Store the nonroad engine on the premises of a dealer (unless approved by the Administrator), owner, or purchaser;

(4) Relinquish control of the nonroad engine to the owner or purchaser; or

(5) Cause a nonroad engine to be altered in any manner subsequent to modification and testing, if applicable, for which an application for final admission is based and submitted to the Administrator, unless approved in advance by the Administrator.

(c) A nonroad engine conditionally admitted pursuant to § 89.604 and not granted final admission within 120 days of such conditional admission, or within such additional time as the Administrator and the U.S. Customs Service may allow, is deemed to be unlawfully imported into the United States in violation of section 213(d) and section 203 of the Act, unless the nonroad engine has been delivered to the U.S. Customs Service for export or other disposition under applicable Customs laws and regulations. A nonroad engine not so delivered is subject to seizure by the U.S. Customs Service.

(d) An importer who violates section 213(d) and section 203 of the Act is subject to the provisions of section 209 of the Act and is also subject to a civil penalty under section 205 of the Act of not more than $25,000 for each nonroad engine subject to the violation. In addition to the penalty provided in the Act, where applicable, a person or entity who imports an engine under the exemption provisions of § 89.611(b) and, who fails to deliver the nonroad engine to the U.S. Customs Service is liable for liquidated damages in the amount of the bond required by applicable Customs laws and regulations.

(e)(1) An ICI whose nonroad engines imported under § 89.605 or § 89.609 fail to conform to federal emission requirements after modification and/or testing or who fails to comply with applicable provisions of this subpart, may, in addition to any other applicable sanctions and penalties, be subject to any, or all, of the following sanctions:

(i) The ICI's currently held certificates of conformity may be revoked or suspended;

(ii) The ICI may be deemed ineligible to apply for new certificates of conformity for up to three years; and

(iii) The ICI may be deemed ineligible to import nonroad engines under § 89.609 in the future and be placed on a list of ICIs ineligible to import nonroad engines under the provisions of § 89.609.

(2) Grounds for the actions described in paragraph (e)(1) of this section include, but are not limited to, the following:

(i) Action or inaction by the ICI or the laboratory performing the emission test on behalf of the ICI, which results in fraudulent, deceitful, or grossly inaccurate representation of any fact or condition which affects a nonroad engine's eligibility for admission to the United States under this subpart;

(ii) Failure of a significant number of imported nonroad engines to comply with federal emission requirements upon EPA inspection or retest; or

(iii) Failure by an ICI to comply with requirements of this subpart.

(3) The following procedures govern any decision to suspend, revoke, or refuse to issue certificates of conformity under this subpart:

(i) When grounds appear to exist for the actions described in paragraph (e)(1) of this section, the Administrator must notify the ICI in writing of any intended suspension or revocation of a certificate of conformity, proposed ineligibility to apply for new certificates of conformity, or intended suspension of eligibility to conduct modification/testing under § 89.609, and the grounds for such action.

(ii) Except as provided by paragraph (e)(3)(iv), the ICI must take the following actions before the Administrator will consider withdrawing notice of intent to suspend or revoke the ICI's certificate of conformity or to deem the ICI ineligible to apply for new certification or to deem the ICI ineligible to perform modification/testing under § 89.609:

(A) Submit a written report to the Administrator which identifies the reason for the noncompliance of the nonroad engine, describes the proposed remedy, including a description of any proposed quality control and/or quality assurance measures to be taken by the ICI to prevent the future occurrence of the problem, and states the date on which the remedies are to be implemented or

(B) Demonstrate that the nonroad engine does in fact comply with applicable regulations in this chapter by retesting, if applicable, the nonroad engine in accordance with the applicable emission test specified in subpart E of this part.

(iii) An ICI may request, within 15 calendar days of the Administrator's notice of intent to suspend or revoke the ICI's certificate of conformity or to deem the ICI ineligible to apply for

new certificates or to deem the ICI ineligible to perform modification/testing under § 89.609, that the Administrator grant such ICI a hearing:

(A) As to whether the tests, if applicable, have been properly conducted,

(B) As to any substantial factual issue raised by the Administrator's proposed action.

(iv) If, after the Administrator notifies an ICI of the intent to suspend or revoke the ICI's certificate of conformity or to deem the ICI ineligible to apply for new certificates or to deem the ICI ineligible to perform modification/testing under § 89.609 and prior to any final suspension or revocation, the ICI demonstrates to the Administrator's satisfaction that the decision to initiate suspension or revocation of the certificate of conformity or eligibility to perform modification/testing under § 89.609 was based on erroneous information, the Administrator will withdraw the notice of intent.

(4) Hearings on suspensions and revocations of certificates of conformity or of eligibility to apply for new certificates or of eligibility to perform modification/testing under § 89.609 will be held in accordance with the following:

(i) The procedures prescribed by this section will apply whenever an ICI requests a hearing pursuant to paragraph (e)(3)(iii) of this section.

(ii) Hearings under paragraph (e)(3)(iii) will be held in accordance with the procedures outlined in § 86.614 of this chapter, where applicable, provided that where § 86.612 is referred to in § 86.614: § 86.612(a) is replaced by § 89.612(e)(2); and § 86.612(i) is replaced by § 89.612(e)(3)(iii).

(5) When a hearing is requested under this section and it clearly appears from the data or other information contained in the request for a hearing, or submitted at the hearing, that no genuine and substantial question of fact exists with respect to the issue of whether the ICI failed to comply with this subpart, the Administrator will enter an order denying the request for a hearing, or terminating the hearing, and suspending or revoking the certificate of conformity and/or deeming the ICI ineligible to apply for new certificates or to perform modification/testing under § 89.609.

(6) In lieu of requesting a hearing under paragraph (e)(3)(iii) of this section, an ICI may respond in writing to EPA's charges in the notice of intent to suspend or revoke. An ICI's written response must be received by EPA within 30 days of the date of EPA's notice of intent. No final decision to suspend or revoke will be made before that time.

[59 FR 31335, June 17, 1994. Redesignated at 63 FR 56996, Oct. 23, 1998]

§ 89.613 Treatment of confidential information.

The provisions for treatment of confidential information as described in § 89.7 apply.

[59 FR 31335, June 17, 1994. Redesignated at 63 FR 56996, Oct. 23, 1998]

Subpart H—Recall Regulations

§ 89.701 Applicability.

The requirements of subpart H are applicable to all nonroad engines subject to the provisions of subpart A of part 89.

§ 89.702 Definitions.

The definitions in subpart A of this part apply to this subpart.

§ 89.703 Applicability of part 85, subpart S.

(a) Nonroad engines subject to provisions of subpart B of this part are subject to recall regulations specified in part 85, subpart S of this title, except for the items set forth in this section.

(b) Reference to section 214 of the Clean Air Act in § 85.1801 is replaced by reference to section 216 of the Clean Air Act.

(c) Reference to section 202 of the Act in § 85.1802(a) is replaced by reference to section 213 of the Act.

(d) Reference to ''family particulate emission limits as defined in Part 86 promulgated under section 202 of the Act'' in § 85.1803(a) and § 85.1805(a)(1) is replaced by reference to family emission limits as defined in part 89 promulgated under section 213 of the Act.

(e) Reference to ''vehicles or engines'' throughout the subpart is replaced by reference to ''engines.''

Subpart I—Emission Defect Reporting Requirements

§ 89.801 Applicability.

The requirements of subpart I are applicable to all nonroad engines subject to the provisions of subpart A of part 89. The requirement to report emission-related defects affecting a given class or category of engines remains applicable for five years from the end of the model year in which such engines were manufactured.

§ 89.802 Definitions.

The definitions in subpart A of this part apply to this subpart.

§ 89.803 Applicability of part 85, subpart T.

(a) Nonroad engines subject to provisions of subpart B of this part are subject to emission defect reporting requirements specified in part 85, subpart T of this chapter, except for the items set forth in this section.

(b) Section 85.1901 is replaced by § 89.801.

(c) Reference to the Clean Air Act, 42 U.S.C. 1857 in § 85.1902(a) is replaced by reference to the Clean Air Act, 42 U.S.C. 7401.

(d) Reference to the ''approved Application for Certification required by 40 CFR 86.077–22 and like provisions of Part 85 and Part 86 of Title 40 of the Code of Federal Regulations'' in § 85.1902(b) is replaced by reference to the approved application for certification required by § 89.115 and like provisions of part 89 of this chapter.

(e) Reference to section 202(d) of the Act in § 85.1902(c) is replaced by reference to section 202(d) and section 213 of the Act.

(f) Reference to section 214 of the Act in § 85.1902 (e) and (f) is replaced by reference to section 216 of the Act.

(g) Reference to ''vehicles or engines'' throughout the subpart is replaced by reference to ''engines.''

Subpart J—Exemption Provisions

§ 89.901 Applicability.

The requirements of subpart J are applicable to all nonroad engines subject to the provisions of subpart A of part 89.

§ 89.902 Definitions.

The definitions in subpart A of this part apply to this subpart. The following definitions also apply to this subpart.

Exemption means exemption from the prohibitions of § 89.1006.

Export exemption means an exemption granted under § 89.1004(b) for the purpose of exporting new nonroad engines.

National security exemption means an exemption which may be granted under § 89.1004(b) for the purpose of national security.

Manufacturer-owned nonroad engine means an uncertified nonroad engine owned and controlled by a nonroad engine manufacturer and used in a manner not involving lease or sale by itself or in a vehicle or piece of equipment employed from year to year in the ordinary course of business for product development, production method assessment, and market promotion purposes.

Testing exemption means an exemption which may be granted under § 89.1004(b) for the purpose of research investigations, studies, demonstrations or training, but not including national security.

§ 89.903 Application of section 216(10) of the Act.

(a) For the purpose of determining the applicability of section 216(10) of the Act, an internal combustion engine (including the fuel system) that is not used in a motor vehicle is deemed a nonroad engine if it meets the definition in subpart A of this part.

(b) EPA will maintain a list of nonroad engines that have been determined to be excluded because they are used solely for competition. This list will be available to the public and may be obtained by writing to the following address: Chief, Selective Enforcement Auditing Section, Engine Programs and Compliance Division (6405–J), Environmental Protection Agency, 1200

Pennsylvania Ave., NW., Washington, DC 20460.

(c) Upon written request, EPA will make written determinations as to whether certain engines are or are not nonroad engines. Engines that are determined not to be nonroad engines are excluded from regulations under this part.

[59 FR 31335, June 17, 1994, as amended at 63 FR 57022, Oct. 23, 1998]

§ 89.904 Who may request an exemption.

(a) Any person may request a testing exemption under § 89.905.

(b) Any nonroad engine manufacturer may request a national security exemption under § 89.908.

(c) For nonroad engine manufacturers, nonroad engines manufactured for export purposes are exempt without application, subject to the provisions of § 89.909.

(d) For eligible manufacturers, as determined by § 89.906, manufacturer-owned nonroad engines are exempt without application, subject to the provisions of § 89.906.

(e) For any person, display nonroad engines are exempt without application, subject to the provisions of § 89.907.

§ 89.905 Testing exemption.

(a) Any person requesting a testing exemption must demonstrate the following:

(1) That the proposed test program has a purpose which constitutes an appropriate basis for an exemption in accordance with this section;

(2) That the proposed test program necessitates the granting of an exemption;

(3) That the proposed test program exhibits reasonableness in scope; and

(4) That the proposed test program exhibits a degree of control consonant with the purpose of the test program and EPA's monitoring requirements.

(5) Paragraphs (b), (c), (d), and (e) of this section describe what constitutes a sufficient demonstration for each of the four identified elements.

(b) With respect to the purpose of the proposed test program, an appropriate purpose would be research, investigations, studies, demonstrations, or training, but not national security. A concise statement of purpose is a required item of information.

(c) With respect to the necessity that an exemption be granted, necessity arises from an inability to achieve the stated purpose in a practicable manner without performing or causing to be performed one or more of the prohibited acts under § 89.1003. In appropriate circumstances, time constraints may be a sufficient basis for necessity, but the cost of certification alone, in the absence of extraordinary circumstances, is not a basis for necessity.

(d) With respect to reasonableness, a test program must exhibit a duration of reasonable length and affect a reasonable number of engines. In this regard, required items of information include:

(1) An estimate of the program's duration, and

(2) The maximum number of nonroad engines involved.

(e) With respect to control, the test program must incorporate procedures consistent with the purpose of the test and be capable of affording EPA monitoring capability. As a minimum, required items of information include:

(1) The technical nature of the test;

(2) The site of the test;

(3) The time or mileage duration of the test;

(4) The ownership arrangement with regard to the engines involved in the test;

(5) The intended final disposition of the engines;

(6) The manner in which the engine identification numbers will be identified, recorded, and made available; and

(7) The means or procedure whereby test results will be recorded.

(f) A manufacturer of new nonroad engines may request a testing exemption to cover nonroad engines intended for use in test programs planned or anticipated over the course of a subsequent one-year period. Unless otherwise required by the Director, Engine Programs and Compliance Division, a manufacturer requesting such an exemption need only furnish the information required by paragraphs (a)(1) and (d)(2) of this section along with a description of the record-keeping and

control procedures that will be employed to assure that the engines are used for purposes consistent with paragraph (a) of this section.

[59 FR 31335, June 17, 1994, as amended at 63 FR 57022, Oct. 23, 1998]

§ 89.906 Manufacturer-owned exemption and precertification exemption.

(a) Except as provided in paragraph (b) of this section, any manufacturer-owned nonroad engine, as defined by § 89.902, is exempt from § 89.1003, without application, if the manufacturer complies with the following terms and conditions:

(1) The manufacturer must establish, maintain, and retain the following adequately organized and indexed information on each exempted engine:

(i) Engine identification number,

(ii) Use of the engine on exempt status and

(iii) Final disposition of any engine removed from exempt status; and

(2) The manufacturer must provide right of entry and access to these records to EPA authorized representatives as outlined in § 89.506.

(3) Unless the requirement is waived or an alternate procedure is approved by the Director, Engine Programs and Compliance Division, the manufacturer must permanently affix a label to each nonroad engine on exempt status. This label should:

(i) Be affixed in a readily visible portion of the engine,

(ii) Be attached in such a manner that cannot be removed without destruction or defacement,

(iii) State in the English language and in block letters and numerals of a color that contrasts with the background of the label, the following information:

(A) The label heading ''Emission Control Information;''

(B) Full corporate name and trademark of manufacturer;

(C) Engine displacement, engine family identification, and model year of engine; or person of office to be contacted for further information about the engine;

(D) The statement ''This nonroad engine is exempt from the prohibitions of 40 CFR 89.1003.''

(4) No provision of paragraph (a)(3) of this section prevents a manufacturer from including any other information it desires on the label.

(b) Any independent commercial importer that desires a precertification exemption pursuant to § 89.611(b)(3) and is in the business of importing, modifying, or testing uncertified nonroad engines for resale under the provisions of subpart G of this part, must apply to the Director, Engine Programs and Compliance Division. The Director may require such independent commercial importer to submit information regarding the general nature of the fleet activities, the number of nonroad engines involved, and a demonstration that adequate record-keeping procedures for control purposes will be employed.

[59 FR 31335, June 17, 1994, as amended at 63 FR 57022, Oct. 23, 1998]

§ 89.907 Display exemption.

Where an uncertified nonroad engine is a display engine to be used solely for display purposes, will only be operated incident and necessary to the display purpose, and will not be sold unless an applicable certificate of conformity has been received or the engine has been finally admitted pursuant to subpart G of this part, no request for exemption of the engine is necessary.

§ 89.908 National security exemption.

(a)(1) Any nonroad engine, otherwise subject to this part, which is used in a vehicle that exhibits substantial features ordinarily associated with military combat such as armor and/or permanently affixed weaponry and which will be owned and/or used by an agency of the federal government with responsibility for national defense, will be considered exempt from these regulations for purposes of national security. No request for exemption is necessary.

(2) Manufacturers may request a national security exemption for any nonroad engine, otherwise subject to this part, which does not meet the conditions described in paragraph (a)(1) of this section. A manufacturer requesting a national security exemption must state the purpose for which the exemption is required and the request must be endorsed by an agency of the federal

government charged with responsibility for national defense.

(b) EPA will maintain a list of models of nonroad engines (and the vehicles which use them) that have been granted a national security exemption under paragraph (a)(2) of this section. This list will be available to the public and may be obtained by writing to the following address: Group Manager, Engine Compliance Programs Group, Engine Programs and Compliance Division (6403J) Environmental Protection Agency, 1200 Pennsylvania Ave., NW., Washington, DC 20460.

[61 FR 52102, Oct. 4, 1996]

§ 89.909 Export exemptions.

(a) A new nonroad engine intended solely for export, and so labeled or tagged on the outside of the container and on the engine itself, is subject to the provisions of § 89.1003, unless the importing country has new nonroad engine emission standards which differ from EPA standards.

(b) For the purpose of paragraph (a) of this section, a country having no standards, whatsoever, is deemed to be a country having emission standards which differ from EPA standards.

(c) EPA will maintain a list of foreign countries that have in force nonroad emission standards identical to EPA standards and have so notified EPA. This list may be obtained by writing to the following address: Chief, Selective Enforcement Auditing Section, Manufacturers Operations Division (6405–J), Environmental Protection Agency, 1200 Pennsylvania Ave., NW., Washington, DC 20460. New nonroad engines exported to such countries must comply with EPA certification regulations.

(d) It is a condition of any exemption for the purpose of export under paragraph (a) of this section, that such exemption is void ab initio with respect to a new nonroad engine intended solely for export, where such nonroad engine is sold, or offered for sale, to an ultimate purchaser or otherwise distributed or introduced into commerce in the United States for purposes other than export.

§ 89.910 Granting of exemptions.

(a) If upon completion of the review of an exemption request made pursuant to § 89.905 or § 89.908, EPA determines it is appropriate to grant such an exemption, a memorandum of exemption is to be prepared and submitted to the person requesting the exemption. The memorandum is to set forth the basis for the exemption, its scope, and such terms and conditions as are deemed necessary. Such terms and conditions generally include, but are not limited to, agreements by the applicant to conduct the exempt activity in the manner described to EPA, create and maintain adequate records accessible to EPA at reasonable times, employ labels for the exempt engines setting forth the nature of the exemption, take appropriate measures to assure that the terms of the exemption are met, and advise EPA of the termination of the activity and the ultimate disposition of the engines.

(b) Any exemption granted pursuant to paragraph (a) of this section is deemed to cover any subject engine only to the extent that the specified terms and conditions are complied with. A breach of any term or condition causes the exemption to be void ab initio with respect to any engine. Consequently, the causing or the performing of an act prohibited under § 89.1003(a)(1) or (a)(3), other than in strict conformity with all terms and conditions of this exemption, renders the person to whom the exemption is granted, and any other person to whom the provisions of § 89.1003(a) are applicable, liable to suit under sections 204 and 205 of the Act.

§ 89.911 Submission of exemption requests.

Requests for exemption or further information concerning exemptions and/or the exemption request review procedure should be addressed to: Chief, Selective Enforcement Auditing Section, Engine Programs and Compliance Division (6405–J), Environmental Protection Agency, 1200 Pennsylvania Ave., NW., Washington, DC 20460.

[63 FR 57022, Oct. 23, 1998]

§ 89.912 Treatment of confidential information.

The provisions for treatment of confidential information as described in § 89.7 apply.

Subpart K—General Enforcement Provisions and Prohibited Acts

§ 89.1001 Applicability.

The requirements of subpart K are applicable to all nonroad engines subject to the provisions of subpart A of part 89, and to all nonroad vehicles and equipment that contain such nonroad engines.

§ 89.1002 Definitions.

The definitions in subpart A of this part apply to this subpart.

§ 89.1003 Prohibited acts.

(a) The following acts and the causing thereof are prohibited:

(1)(i) In the case of a manufacturer of new nonroad engines, vehicles, or equipment for distribution in commerce, the sale, or the offering for sale, or the introduction, or delivery for introduction, into commerce, of any new nonroad engine manufactured after the applicable effective date under this part, or any nonroad vehicle or equipment containing such engine, unless such engine is covered by a certificate of conformity issued (and in effect) under regulations found in this part.

(ii) In the case of any person, except as provided in subpart G of this part, the importation into the United States of any new nonroad engine manufactured after the applicable effective date under this part, or any nonroad vehicle or equipment containing such engine, unless such engine is covered by a certificate of conformity issued (and in effect) under regulations found in this part.

(2)(i) For a person to fail or refuse to permit access to or copying of records or to fail to make reports or provide information required under § 89.1004.

(ii) For a person to fail or refuse to permit entry, testing, or inspection authorized under §§ 89.129, 89.506 or 89.1004.

(iii) For a person to fail or refuse to perform tests, or to have tests performed as required under §§ 89.119 or 89.1004.

(iv) For a person to fail to establish or maintain records as required under § 89.1004.

(3)(i) For a person to remove or render inoperative a device or element of design installed on or in a nonroad engine, vehicle or equipment in compliance with regulations under this part prior to its sale and delivery to the ultimate purchaser, or for a person knowingly to remove or render inoperative such a device or element of design after the sale and delivery to the ultimate purchaser; or

(ii) For a person to manufacture, sell or offer to sell, or install, a part or component intended for use with, or as part of, a nonroad engine, vehicle or equipment, where a principal effect of the part or component is to bypass, defeat, or render inoperative a device or element of design installed on or in a nonroad engine in compliance with regulations issued under this part, and where the person knows or should know that the part or component is being offered for sale or installed for this use or put to such use; or

(iii) For a person to deviate from the provisions of § 89.130 when rebuilding an engine (or rebuilding a portion of an engine or engine system).

(4) For a manufacturer of a new nonroad engine subject to standards prescribed under this part:

(i) To sell, offer for sale, or introduce or deliver into commerce, a nonroad engine unless the manufacturer has complied with the requirements of § 89.1007.

(ii) To sell, offer for sale, or introduce or deliver into commerce, a nonroad engine unless a label or tag is affixed to the engine in accordance with § 89.110.

(iii) To fail or refuse to comply with the requirements of § 89.1008.

(iv) Except as provided in § 89.109, to provide directly or indirectly in any communication to the ultimate purchaser or a subsequent purchaser that the coverage of a warranty under the Act is conditioned upon use of a part, component, or system manufactured by the manufacturer or a person acting

for the manufacturer or under its control, or conditioned upon service performed by such persons.

(v) To fail or refuse to comply with the terms and conditions of the warranty under § 89.1007.

(5) For a person to circumvent or attempt to circumvent the residence time requirements of paragraph (2)(iii) of the nonroad engine definition in § 89.2.

(6) For a manufacturer of nonroad vehicles or equipment to distribute in commerce, sell, offer for sale, or introduce into commerce a nonroad vehicle or piece of equipment which contains an engine not covered by a certificate of conformity, except as otherwise allowed by this part.

(b) For the purposes of enforcement of this part, the following apply:

(1) Nothing in paragraph (a)(3) of this section is to be construed to require the use of manufacturer parts in maintaining or repairing a nonroad engine.

(2) Actions for the purpose of repair or replacement of a device or element of design or any other item are not considered prohibited acts under § 89.1003(a) if the action is a necessary and temporary procedure, the device or element is replaced upon completion of the procedure, and the action results in the proper functioning of the device or element of design.

(3) Actions for the purpose of a conversion of a nonroad engine for use of a clean alternative fuel (as defined in Title II of the Act) are not considered prohibited acts under § 89.1003(a) if:

(i) the vehicle complies with the applicable standard when operating on the alternative fuel, and the device or element is replaced upon completion of the conversion procedure, and

(ii) in the case of engines converted to dual fuel or flexible use, the action results in proper functioning of the device or element when the nonroad engine operates on conventional fuel.

(4) Certified nonroad engines shall be used in all vehicles and equipment manufactured on or after the applicable model years in § 89.112 that are self-propelled, portable, transportable, or are intended to be propelled while performing their function, unless the manufacturer of the vehicle or equipment can prove that the vehicle or equipment will be used in a manner consistent with paragraph (2) of the definition of nonroad engine in § 89.2. After the date on which a new standard takes effect, nonroad vehicle and equipment manufacturers may continue to use nonroad engines built prior to this date that are not certified to the standard until inventories of those engines are depleted; however, stockpiling of such nonroad engines will be considered a violation of this section.

(5) A manufacturer of nonroad vehicles may install an engine certified to the motor vehicle requirements of 40 CFR part 86 in a nonroad vehicle or equipment where:

(i) The subject nonroad vehicle or equipment is designed for travel on public streets and highways to get from one job site to another; and

(ii) The engine serves to propel the vehicle or equipment when it is operated on public roads; and

(iii) There is no adjustment outside of the manufacturer's specifications or removal or rendering inoperative of devices or elements of design installed on or in the engine by the original engine manufacturer for purposes of emission control or any other action that may be considered tampering under section 203 of the Clean Air Act or paragraph (a)(3) of this section; and

(iv) A certified nonroad engine is not available with appropriate physical or performance characteristics; or

(v) A state requires the use of an on-highway engine pursuant to a waiver granted by EPA under section 209(e) of the Clean Air Act.

(6) A manufacturer that produces nonroad vehicles or equipment by performing modifications to complete or incomplete motor vehicles may retain the motor vehicle engine in such vehicle or equipment provided that:

(i) The engine is certified to the motor vehicle requirements of 40 CFR part 86; and

(ii) The on-highway vehicle is not available from its manufacturer with a certified nonroad engine having appropriate performance characteristics; and

(iii) There is no adjustment outside of the manufacturer's specifications or removal or rendering inoperative of devices or elements of design installed on

or in the engine or vehicle by the original engine or vehicle manufacturer for purposes of emission control, or any other action that may be considered tampering under section 203 of the Clean Air Act or paragraph (a)(3) of this section.

(7) A new nonroad engine intended solely to replace a nonroad engine in a piece of nonroad equipment, where the engine requiring replacement is not certified or is certified to emission standards that are less stringent than those in effect when the replacement engine is built, shall not be subject to the prohibitions of paragraph (a)(1) of this section or to the requirements of § 89.105 and paragraph (b)(4) of this section, provided that:

(i) The engine manufacturer has ascertained that no engine produced by itself or by the manufacturer of the engine that is being replaced, if different, and certified to the requirements of this subpart, is available with the appropriate physical or performance characteristics to repower the equipment; and

(ii) The engine manufacturer or its agent takes ownership and possession of the engine being replaced in partial exchange for the replacement engine; and

(iii) The replacement engine is clearly labeled with the following language, or similar alternate language approved by the Administrator: THIS ENGINE DOES NOT COMPLY WITH FEDERAL NONROAD OR ON-HIGHWAY EMISSION REQUIREMENTS. SALE OR INSTALLATION OF THIS ENGINE FOR ANY PURPOSE OTHER THAN AS A REPLACEMENT ENGINE FOR AN ENGINE MANUFACTURED PRIOR TO JANUARY 1 [INSERT APPROPRIATE YEAR] IS A VIOLATION OF FEDERAL LAW SUBJECT TO CIVIL PENALTY; and

(iv) In cases where an engine is to be imported for replacement purposes under the provisions of this paragraph (b)(7), the term ''engine manufacturer'' shall not apply to an individual or other entity that does not possess a current Certificate of Conformity issued by EPA under this part; and

(v) Where the replacement engine is intended to replace an engine that is certified to emission standards that are less stringent than those in effect when the replacement engine is built, the replacement engine shall be identical in all material respects to a certified configuration of the same or later model year as the engine being replaced; and

(vi) Engines sold pursuant to the provisions of this paragraph (b)(7) will neither generate nor use emission credits and will not be part of any accounting under the averaging, banking and trading program.

[59 FR 31335, June 17, 1994, as amended at 61 FR 58106, Nov. 12, 1996; 63 FR 57022, Oct. 23, 1998]

§ 89.1004 General enforcement provisions.

(a) *Information collection provisions.* (1) Every manufacturer of new nonroad engines and other persons subject to the requirements of this part must establish and maintain records, perform tests where such testing is not otherwise reasonably available under this part, make reports and provide information the Administrator may reasonably require to determine whether the manufacturer or other person has acted or is acting in compliance with this part or to otherwise carry out the provisions of this part, and must, upon request of an officer or employee duly designated by the Administrator, permit the officer or employee at reasonable times to have access to and copy such records. The manufacturer shall comply in all respects with the requirements of subpart I of this part.

(2) For purposes of enforcement of this part, an officer or employee duly designated by the Administrator, upon presenting appropriate credentials, is authorized:

(i) To enter, at reasonable times, any establishment of the manufacturer, or of any person whom the manufacturer engaged to perform any activity required under paragraph (a) (1) of this section, for the purposes of inspecting or observing any activity conducted pursuant to paragraph (a)(1) of this section, and

(ii) To inspect records, files, papers, processes, controls, and facilities used in performing an activity required by paragraph (a)(1) of this section, by the manufacturer or by a person whom the

manufacturer engaged to perform the activity.

(b) *Exemption provision*. The Administrator may exempt a new nonroad engine from § 89.1003 upon such terms and conditions as the Administrator may find necessary for the purpose of export, research, investigations, studies, demonstrations, or training, or for reasons of national security.

(c) *Importation provision*. (1) A new nonroad engine, vehicle, or equipment offered for importation or imported by a person in violation of § 89.1003 is to be refused admission into the United States, but the Secretary of the Treasury and the Administrator may, by joint regulation, provide for deferring a final determination as to admission and authorizing the delivery of such a nonroad engine offered for import to the owner or consignee thereof upon such terms and conditions (including the furnishing of a bond) as may appear to them appropriate to insure that the nonroad engine will be brought into conformity with the standards, requirements, and limitations applicable to it under this part.

(2) If a nonroad engine is finally refused admission under this paragraph, the Secretary of the Treasury shall cause disposition thereof in accordance with the customs laws unless it is exported, under regulations prescribed by the Secretary, within 90 days of the date of notice of the refusal or additional time as may be permitted pursuant to the regulations.

(3) Disposition in accordance with the customs laws may not be made in such manner as may result, directly or indirectly, in the sale, to the ultimate consumer, of a new nonroad engine that fails to comply with applicable standards of the Administrator under this part.

(d) *Export provision*. A new nonroad engine intended solely for export, and so labeled or tagged on the outside of the container and on the engine itself, shall be subject to the provisions of § 89.1003, except that if the country that is to receive the engine has emission standards that differ from the standards prescribed under subpart B of this part, then the engine must comply with the standards of the country that is to receive the engine.

§ 89.1005 Injunction proceedings for prohibited acts.

(a) The district courts of the United States have jurisdiction to restrain violations of § 89.1003(a).

(b) Actions to restrain violations of § 89.1003(a) must be brought by and in the name of the United States. In an action, subpoenas for witnesses who are required to attend a district court in any district may run into any other district.

§ 89.1006 Penalties.

(a) *Violations*. A violation of the requirements of this subpart is a violation of the applicable provisions of the Act, including sections 213(d) and 203, and is subject to the penalty provisions thereunder.

(1) A person who violates § 89.1003(a)(1), (a)(4), or (a)(6), or a manufacturer or dealer who violates § 89.1003(a)(3)(i), is subject to a civil penalty of not more than $25,000 for each violation.

(2) A person other than a manufacturer or dealer who violates § 89.1003(a)(3)(i) or any person who violates § 89.1003(a)(3)(ii) is subject to a civil penalty of not more than $2,500 for each violation.

(3) A violation with respect to § 89.1003 (a)(1), (a)(3)(i), (a)(4), or (a)(6) constitutes a separate offense with respect to each nonroad engine.

(4) A violation with respect to § 89.1003(a)(3)(ii) constitutes a separate offense with respect to each part or component. Each day of a violation with respect to § 89.1003(a)(5) constitutes a separate offense.

(5) A person who violates § 89.1003(a)(2) or (a)(5) is subject to a civil penalty of not more than $25,000 per day of violation.

(b) *Civil actions*. The Administrator may commence a civil action to assess and recover any civil penalty under paragraph (a) of this section.

(1) An action under this paragraph may be brought in the district court of the United States for the district in which the defendant resides or has the Administrator's principal place of business, and the court has jurisdiction to assess a civil penalty.

(2) In determining the amount of a civil penalty to be assessed under this

paragraph, the court is to take into account the gravity of the violation, the economic benefit or savings (if any) resulting from the violation, the size of the violator's business, the violator's history of compliance with Title II of the Act, action taken to remedy the violation, the effect of the penalty on the violator's ability to continue in business, and such other matters as justice may require.

(3) In any such action, subpoenas for witnesses who are required to attend a district court in any district may run into any other district.

(c) *Administrative assessment of certain penalties*—(1) *Administrative penalty authority*. In lieu of commencing a civil action under paragraph (b) of this section, the Administrator may assess any civil penalty prescribed in paragraph (a) of this section, except that the maximum amount of penalty sought against each violator in a penalty assessment proceeding shall not exceed $200,000, unless the Administrator and the Attorney General jointly determine that a matter involving a larger penalty amount is appropriate for administrative penalty assessment. Any such determination by the Administrator and the Attorney General is not subject to judicial review. Assessment of a civil penalty shall be by an order made on the record after opportunity for a hearing held in accordance with the procedures found at part 22 of this chapter. The Administrator may compromise, or remit, with or without conditions, any administrative penalty which may be imposed under this section.

(2) *Determining amount*. In determining the amount of any civil penalty assessed under this paragraph, the Administrator shall take into account the gravity of the violation, the economic benefit or savings (if any) resulting from the violation, the size of the violator's business, the violator's history of compliance with Title II of the Act, action taken to remedy the violation, the effect of the penalty on the violator's ability to continue in business, and such other matters as justice may require.

(3) *Effect of administrator's action*. (i) Action by the Administrator under this paragraph does not affect or limit the Administrator's authority to enforce any provisions of the Act; except that any violation with respect to which the Administrator has commenced and is diligently prosecuting an action under this paragraph, or for which the Administrator has issued a final order not subject to further judicial review and for which the violator has paid a penalty assessment under this paragraph shall not be the subject of a civil penalty action under paragraph (b) of this section.

(ii) No action by the Administrator under this paragraph shall affect a person's obligation to comply with a section of this part.

(4) *Finality of order*. An order issued under this subsection is to become final 30 days after its issuance unless a petition for judicial review is filed under paragraph (c)(5) of this section.

(5) *Judicial review*. A person against whom a civil penalty is assessed in accordance with this subsection may seek review of the assessment in the United States District Court for the District of Columbia or for the district in which the violation is alleged to have occurred, in which such person resides, or where the person's principal place of business is located, within the 30-day period beginning on the date a civil penalty order is issued. The person shall simultaneously send a copy of the filing by certified mail to the Administrator and the Attorney General. The Administrator shall file in the court within 30 days a certified copy, or certified index, as appropriate, of the record on which the order was issued. The court is not to set aside or remand any order issued in accordance with the requirements of this paragraph unless substantial evidence does not exist in the record, taken as a whole, to support the finding of a violation or unless the Administrator's assessment of the penalty constitutes an abuse of discretion, and the court is not to impose additional civil penalties unless the Administrator's assessment of the penalty constitutes an abuse of discretion. In any proceedings, the United States may seek to recover civil penalties assessed under this section.

(6) *Collection*. (i) If any person fails to pay an assessment of a civil penalty

imposed by the Administrator as provided in this part after the order making the assessment has become final or after a court in an action brought under paragraph (c)(5) of this section has entered a final judgment in favor of the Administrator, the Administrator shall request that the Attorney General bring a civil action in an appropriate district court to recover the amount assessed (plus interest at rates established pursuant to section 6621(a)(2) of the Internal Revenue Code of 1986 from the date of the final order or the date of final judgment, as the case may be). In such an action, the validity, amount, and appropriateness of the penalty is not subject to review.

(ii) A person who fails to pay on a timely basis the amount of an assessment of a civil penalty as described in paragraph (c)(6)(i) of this section shall be required to pay, in addition to that amount and interest, the United States' enforcement expenses, including attorney's fees and costs for collection proceedings, and a quarterly nonpayment penalty for each quarter during which the failure to pay persists. The nonpayment penalty is an amount equal to ten percent of the aggregate amount of that person's penalties and nonpayment penalties which are unpaid as of the beginning of such quarter.

§ 89.1007 Warranty provisions.

(a) The manufacturer of each nonroad engine must warrant to the ultimate purchaser and each subsequent purchaser that the engine is designed, built, and equipped so as to conform at the time of sale with applicable regulations under section 213 of the Act, and is free from defects in materials and workmanship which cause such engine to fail to conform with applicable regulations for its warranty period (as determined under § 89.104).

(b) In the case of a nonroad engine part, the manufacturer or rebuilder of the part may certify according to § 85.2112 that use of the part will not result in a failure of the engine to comply with emission standards promulgated in this part.

(c) For the purposes of this section, the owner of any nonroad engine warranted under this part is responsible for the proper maintenance of the engine. Proper maintenance includes replacement and service, at the owner's expense at a service establishment or facility of the owner's choosing, of all parts, items, or devices related to emission control (but not designed for emission control) under the terms of the last sentence of section 207(a)(3) of the Act, unless such part, item, or device is covered by any warranty not mandated by this Act.

[59 FR 31335, June 17, 1994, as amended at 63 FR 57023, Oct. 23, 1998]

§ 89.1008 In-use compliance provisions.

(a) Effective with respect to nonroad vehicles, equipment, and engines manufactured during model years 1996 and after:

(1) If the Administrator determines that a substantial number of any class or category of engines, although properly maintained and used, do not conform to the regulations prescribed under section 213 of the Act when in actual use throughout their recall period (as defined under § 89.104(b)), the Administrator shall immediately notify the manufacturer of such nonconformity and require the manufacturer to submit a plan for remedying the nonconformity of the engines with respect to which such notification is given.

(i) The manufacturer's plan shall provide that the nonconformity of any such engines which are properly used and maintained will be remedied at the expense of the manufacturer.

(ii) If the manufacturer disagrees with such determination of nonconformity and so advises the Administrator, the Administrator shall afford the manufacturer and other interested persons an opportunity to present their views and evidence in support thereof at a public hearing. Unless, as a result of such hearing, the Administrator withdraws such determination of nonconformity, the Administrator shall, within 60 days after the completion of such hearing, order the manufacturer to provide prompt notification of such nonconformity in accordance with paragraph (a)(2) of this section. The manufacturer shall comply in all respects with the requirements of subpart G of this part.

(2) Any notification required to be given by the manufacturer under paragraph (a)(1) of this section with respect to any class or category of engines shall be given to dealers, ultimate purchasers, and subsequent purchasers (if known) in such manner and containing such information as required in subparts H and I of this part.

(3)(i) The manufacturer shall furnish with each new nonroad engine written instructions for the proper maintenance and use of the engine by the ultimate purchaser as required under § 89.109. The manufacturer shall provide in boldface type on the first page of the written maintenance instructions notice that maintenance, replacement, or repair of the emission control devices and systems may be performed by any nonroad engine repair establishment or individual using any nonroad engine part which has been certified as provided in § 89.1007(a).

(ii) The instruction under paragraph (3)(i) of this section must not include any condition on the ultimate purchaser's using, in connection with such engine, any component or service (other than a component or service provided without charge under the terms of the purchase agreement) which is identified by brand, trade, or corporate name. Subject instructions also must not directly or indirectly distinguish between service performed by the franchised dealers of such manufacturer, or any other service establishments with which such manufacturer has a commercial relationship, and service performed by independent nonroad engine repair facilities with which such manufacturer has no commercial relationship.

(iii) The prohibition of paragraph (a)(3)(ii) of this section may be waived by the Administrator if:

(A) The manufacturer satisfies the Administrator that the engine will function properly only if the component or service so identified is used in connection with such engine, and

(B) The Administrator finds that such a waiver is in the public interest.

(iv) In addition, the manufacturer shall indicate by means of a label or tag permanently affixed to the engine that the engine is covered by a certificate of conformity issued for the purpose of assuring achievement of emission standards prescribed under section 213 of the Act. This label or tag shall also contain information relating to control of emissions as prescribed under § 89.110.

(b) The manufacturer bears all cost obligation a dealer incurs as a result of a requirement imposed by paragraph (a) of this section. The transfer of any such cost obligation from a manufacturer to a dealer through franchise or other agreement is prohibited.

(c) If a manufacturer includes in an advertisement a statement respecting the cost or value of emission control devices or systems, the manufacturer shall set forth in the statement the cost or value attributed to these devices or systems by the Secretary of Labor (through the Bureau of Labor Statistics). The Secretary of Labor, and his or her representatives, has the same access for this purpose to the books, documents, papers, and records of a manufacturer as the Comptroller General has to those of a recipient of assistance for purposes of section 311 of the Act.

(d) Any inspection of a nonroad engine for purposes of paragraph (a)(1) of this section, after its sale to the ultimate purchaser, is to be made only if the owner of such vehicle or engine voluntarily permits such inspection to be made, except as may be provided by any state or local inspection program.

PART 90—CONTROL OF EMISSIONS FROM NONROAD SPARK-IGNITION ENGINES

Subpart A—General

Sec.
90.1 Applicability.
90.2 Effective dates.
90.3 Definitions.
90.4 Treatment of confidential information.
90.5 Acronyms and abbreviations.
90.6 Table and figure numbering; position.
90.7 Reference materials.

Subpart B—Emission Standards and Certification Provisions

90.101 Applicability.
90.102 Definitions.
90.103 Exhaust emission standards.
90.104 Compliance with emission standards.

90.105 Useful life periods for Phase 2 engines.
90.106 Certificate of conformity.
90.107 Application for certification.
90.108 Certification.
90.109 Requirement of certification—closed crankcase.
90.110 Requirement of certification—prohibited controls.
90.111 Requirement of certification—prohibition of defeat devices.
90.112 Requirement of certification—adjustable parameters.
90.113 In-use testing program for Phase 1 engines.
90.114 Requirement of certification—engine information label.
90.115 Requirement of certification—supplying production engines upon request.
90.116 Certification procedure—determining engine displacement, engine class, and engine families.
90.117 Certification procedure—test engine selection.
90.118 Certification procedure—service accumulation and usage of deterioration factors.
90.119 Certification procedure—testing.
90.120 Certification procedure—use of special test procedures.
90.121 Certification procedure—recordkeeping.
90.122 Amending the application and certificate of conformity.
90.123 Denial, revocation of certificate of conformity.
90.124 Request for hearing.
90.125 Hearing procedures.
90.126 Right of entry and access.

Subpart C—Certification Averaging, Banking, and Trading Provisions

90.201 Applicability.
90.202 Definitions.
90.203 General provisions.
90.204 Averaging.
90.205 Banking.
90.206 Trading.
90.207 Credit calculation and manufacturer compliance with emission standards.
90.208 Certification.
90.209 Maintenance of records.
90.210 End-of-year and final reports.
90.211 Request for hearing.
90.212 Optional transition year averaging, banking, and trading program for Phase 2 handheld engines.
90.213 Averaging under the optional program.
90.214 Banking under the optional program.
90.215 Trading under the optional program.
90.216 Credit calculation and manufacturer compliance with emission standards under the optional program.
90.217 Certification under the optional program.
90.218 Maintenance of records under the optional program.
90.219 End-of-year and final reports under the optional program.
90.220 Request for hearing.

Subpart D—Emission Test Equipment Provisions

90.301 Applicability.
90.302 Definitions.
90.303 Symbols, acronyms, abbreviations.
90.304 Test equipment overview.
90.305 Dynamometer specifications and calibration accuracy.
90.306 Dynamometer torque cell calibration.
90.307 Engine cooling system.
90.308 Lubricating oil and test fuels.
90.309 Engine intake air temperature measurement.
90.310 Engine intake air humidity measurement.
90.311 Test conditions.
90.312 Analytical gases.
90.313 Analyzers required.
90.314 Analyzer accuracy and specifications.
90.315 Analyzer initial calibration.
90.316 Hydrocarbon analyzer calibration.
90.317 Carbon monoxide analyzer calibration.
90.318 Oxides of nitrogen analyzer calibration.
90.319 NO_X converter check.
90.320 Carbon dioxide analyzer calibration.
90.321 NDIR analyzer calibration.
90.322 Calibration of other equipment.
90.323 Analyzer bench checks.
90.324 Analyzer leakage check.
90.325 Analyzer interference checks.
90.326 Pre- and post-test analyzer calibration.
90.327 Sampling system requirements.
90.328 Measurement equipment accuracy/calibration frequency table.
90.329 Catalyst thermal stress test.
APPENDIX A TO SUBPART D OF PART 90—TABLES
APPENDIX B TO SUBPART D OF PART 90—FIGURES

Subpart E—Gaseous Exhaust Test Procedures

90.401 Applicability.
90.402 Definitions.
90.403 Symbols, acronyms, and abbreviations.
90.404 Test procedure overview.
90.405 Recorded information.
90.406 Engine parameters to be measured and recorded.
90.407 Engine inlet and exhaust systems.
90.408 Pre-test procedures.
90.409 Engine dynamometer test run.
90.410 Engine test cycle.
90.411 Post-test analyzer procedures.
90.412 Data logging.

90.413 Exhaust sample procedure—gaseous components.
90.414 Raw gaseous exhaust sampling and analytical system description.
90.415 Raw gaseous sampling procedures.
90.416 Intake air flow measurement specifications.
90.417 Fuel flow measurement specifications.
90.418 Data evaluation for gaseous emissions.
90.419 Raw emission sampling calculations—gasoline fueled engines.
90.420 CVS concept of exhaust gas sampling system.
90.421 Dilute gaseous exhaust sampling and analytical system description.
90.422 Background sample.
90.423 Exhaust gas analytical system; CVS grab sample.
90.424 Dilute sampling procedures—CVS calibration.
90.425 CVS calibration frequency.
90.426 Dilute emission sampling calculations—gasoline fueled engines.
90.427 Catalyst thermal stress resistance evaluation.
APPENDIX A TO SUBPART E OF PART 90—TABLES
APPENDIX B TO SUBPART E OF PART 90—FIGURES

Subpart F—Selective Enforcement Auditing

90.501 Applicability.
90.502 Definitions.
90.503 Test orders.
90.504 Testing by the Administrator.
90.505 Maintenance of records; submittal of information.
90.506 Right of entry and access.
90.507 Sample selection.
90.508 Test procedures.
90.509 Calculation and reporting of test results.
90.510 Compliance with acceptable quality level and passing and failing criteria for selective enforcement audits.
90.511 Suspension and revocation of certificates of conformity.
90.512 Request for public hearing.
90.513 Administrative procedures for public hearing.
90.514 Hearing procedures.
90.515 Appeal of hearing decision.
90.516 Treatment of confidential information.
APPENDIX A TO SUBPART F OF PART 90—SAMPLING PLANS FOR SELECTIVE ENFORCEMENT AUDITING OF SMALL NONROAD ENGINES

Subpart G—Importation of Nonconforming Engines

90.601 Applicability.
90.602 Definitions.
90.603 [Reserved]
90.604 General requirements.
90.605–90.610 [Reserved]
90.611 Importation for purposes other than resale.
90.612 Exemptions and exclusions.
90.613 Prohibited acts; penalties.
90.614 Treatment of confidential information.

Subpart H—Manufacturer Production Line Testing Program

90.701 Applicability.
90.702 Definitions.
90.703 Production line testing by the manufacturer.
90.704 Maintenance of records; submission of information.
90.705 Right of entry and access.
90.706 Engine sample selection.
90.707 Test procedures.
90.708 Cumulative Sum (CumSum) procedure.
90.709 Calculation and reporting of test results.
90.710 Compliance with criteria for production line testing.
90.711 Suspension and revocation of certificates of conformity.
90.712 Request for public hearing.
90.713 Administrative procedures for public hearing.

Subpart I—Emission-related Defect Reporting Requirements, Voluntary Emission Recall Program, Ordered Recalls

90.801 Applicability.
90.802 Definitions.
90.803 Emission defect information report.
90.804 Voluntary emissions recall.
90.805 Reports, voluntary recall plan filing, record retention.
90.806 Responsibility under other legal provisions preserved.
90.807 Disclaimer of production warranty applicability.
90.808 Ordered recall provisions.

Subpart J—Exclusion and Exemption of Nonroad Engines From Regulations

90.901 Applicability.
90.902 Definitions.
90.903 Exclusions, application of section 216 (10) and (11) of the Act.
90.904 Who may request an exemption.
90.905 Testing exemption.
90.906 Manufacturer-owned exemption and precertification exemption.
90.907 Display exemption.
90.908 National security exemption.
90.909 Export exemptions.
90.910 Granting of exemptions.
90.911 Submission of exemption requests.

90.912 Treatment of confidential information.

Subpart K—Prohibited Acts and General Enforcement Provisions

90.1001 Applicability.
90.1002 Definitions.
90.1003 Prohibited acts.
90.1004 General enforcement provisions.
90.1005 Injunction proceedings for prohibited acts.
90.1006 Penalties.

Subpart L—Emission Warranty and Maintenance Instructions

90.1101 Applicability.
90.1102 Definitions.
90.1103 Emission warranty, warranty period.
90.1104 Furnishing of maintenance instructions to ultimate purchaser.

Subpart M—Voluntary In-Use Testing

Sec.
90.1201 Applicability.
90.1202 Definitions.
90.1203 Voluntary Manufacturer In-use testing program.
90.1204 Maintenance, aging and testing of engines.
90.1205 In-use test program reporting requirements.
90.1206 Reserved.
90.1207 Entry and access.
90.1208–90.1249 [Reserved]

AUTHORITY: 42 U.S.C. 7521, 7522, 7523, 7524, 7525, 7541, 7542, 7543, 7547, 7549, 7550, and 7601(a).

SOURCE: 60 FR 34598, July 3, 1995, unless otherwise noted.

Subpart A—General

§90.1 Applicability.

(a) This part applies to nonroad spark-ignition engines and vehicles that have a gross power output at or below 19 kilowatts (kW) and that are used for any purpose. To the extent permitted by other parts of this chapter, this part may, at the engine manufacturer's option, apply to engines with gross power output greater than 19 kW that have an engine displacement of less than or equal to one liter:

(b) Notwithstanding paragraph (a) of this section, the following nonroad engines and vehicles are not subject to the provisions of this part:

(1) Engines used to propel marine vessels as defined in the General Provisions of the United States Code, 1 U.S.C. 3 (1992);

(2) Engines that are both:

(i) Used in underground mining or in underground mining equipment; and

(ii) Regulated by the Mining Safety and Health Administration (MSHA) in 30 CFR parts 7, 31, 32, 36, 56, 57, 70, and 75;

(3) Engines used in motorcycles and regulated in 40 CFR part 86, subpart E;

(4) Engines used in aircraft as that term is defined in 40 CFR 87.1(a);

(5) Engines used in recreational vehicles and which are defined by the following criteria:

(i) The engine's rated speed is greater than or equal to 5,000 RPM;

(ii) The engine has no installed speed governor;

(iii) The engine is not used for the propulsion of a marine vessel; and

(iv) The engine does not meet the criteria to be categorized as a Class III, IV or V engine, as indicated in §90.103, except for cases where the engine will be used only to propel a flying vehicle forward, sideways, up, down or backward through air;

(6) Engines that are used exclusively in emergency and rescue equipment where no certified engines are available to power the equipment safely and practically, but not including generators, alternators, compressors or pumps used to provide remote power to a rescue tool. The equipment manufacturer bears the responsibility to ascertain on an annual basis and maintain documentation available to the Administrator that no appropriate certified engine is available from any source.

(c) Engines subject to the provisions of this subpart are also subject to the provisions found in subparts B through M of this part, except that subparts C, H, and M of this part apply only to Phase 2 engines as defined in this subpart.

(d) Certain text in this part is identified as pertaining to Phase 1 or Phase 2 engines. Such text pertains only to engines of the specified Phase. If no indication of Phase is given, the text pertains to all engines, regardless of Phase.

[60 FR 34598, July 3, 1995, as amended at 64 FR 15235, Mar. 30, 1999; 65 FR 24305, Apr. 25, 2000]

§ 90.2 Effective dates.

(a) This subpart applies to nonroad spark-ignition engines at or below 19 kW effective with the 1997 model year.

(b) Notwithstanding paragraph (a) of this section, this subpart applies to class V engines, as specified in § 90.116(b)(5), that are preempted from regulation in California by section 209(e)(1)(A) of the Act, effective January 1, 1998.

§ 90.3 Definitions.

The following definitions apply to part 90. All terms not defined herein have the meaning given them in the Act.

Act means the Clean Air Act, as amended, 42 U.S.C. 7401 et seq.

Adjustable parameter means any device, system, or element of design which is physically capable of being adjusted (including those which are difficult to access) and which, if adjusted, may affect emissions or engine performance during emission testing or normal in-use operation.

Administrator means the Administrator of the Environmental Protection Agency or his or her authorized representative.

Aftertreatment means the passage of exhaust gases through a device or system such as a catalyst whose purpose is to chemically alter the gases prior to their release to the atmosphere.

Auxiliary emission control device (AECD) means any element of design that senses temperature, vehicle speed, engine RPM, transmission gear, or any other parameter for the purpose of activating, modulating, delaying, or deactivating the operation of any part of the emission control system.

Certification means, with respect to new nonroad engines, obtaining a certificate of conformity for an engine family complying with the nonroad engine emission standards and requirements specified in this part.

DF or *df* means deterioration factor.

Eligible production or *U.S. production* means Phase 2 engines produced for purposes of being used in the United States, and includes any engine exported and subsequently imported in a new piece of equipment, but excludes any engine introduced into commerce, by itself or in a piece of equipment, for use in a state that has established its own emission requirements applicable to such engines pursuant to a waiver granted by EPA under section 209(e) of the Clean Air Act.

Emission control system means any device, system, or element of design which controls or reduces the emission of substances from an engine.

Engine as used in this part, refers to nonroad engine.

Engine family means a group of engines, as specified in § 90.116.

Engine manufacturer means any person engaged in the manufacturing or assembling of new nonroad engines or the importing of such engines for resale, or who acts for and is under the control of any such person in connection with the distribution of such engines. Engine manufacturer does not include any dealer with respect to new nonroad engines received by such person in commerce.

EPA enforcement officer means any officer, employee, or authorized representative of the U.S. Environmental Protection Agency so designated in writing by the Administrator (or by his or her designee).

Equipment manufacturer means a manufacturer of equipment using engines covered by the provisions of this Part who does not also manufacture engines covered by the provisions of this Part.

Exhaust emissions means matter emitted into the atmosphere from any opening downstream from the exhaust port of a nonroad engine.

Family Emission Limit or *FEL* means an emission level that is declared by the manufacturer to serve in lieu of an emission standard for the purposes of certification, production line testing, and Selective Enforcement Auditing for engines participating in the averaging, banking and trading program. A declared FEL will also serve in lieu of an emission standard where the manufacturer elects to perform voluntary in-use testing under this part. An FEL must be expressed to the same number of decimal places as the applicable emission standard.

Fuel system means all components involved in the transport, metering, and mixture of the fuel from the fuel tank

to the combustion chamber(s) including the following: fuel tank, fuel tank cap, fuel pump, fuel lines, oil injection metering system, carburetor or fuel injection components, and all fuel system vents.

Gross power means the power measured at the crankshaft or its equivalent, the engine being equipped only with the standard accessories (such as oil pumps, coolant pumps, and so forth) necessary for its operation on the test bed.

Handheld equipment engine means a nonroad engine that meets the requirements specified in §90.103(a)(2)(I) through (v).

$HC+NO_X$ means total hydrocarbons plus oxides of nitrogen.

Model year (MY) means the manufacturer's annual new model production period which includes January 1 of the calendar year, ends no later than December 31 of the calendar year, and does not begin earlier than January 2 of the previous calendar year. Where a manufacturer has no annual new model production period, model year means calendar year.

New, for the purposes of this part, means a nonroad engine or nonroad vehicle the equitable or legal title to which has never been transferred to an ultimate purchaser. Where the equitable or legal title to the engine or vehicle is not transferred to an ultimate purchaser until after the engine or vehicle is placed into service, then the engine or vehicle will no longer be new after it is placed into service. A nonroad engine or vehicle is placed into service when it is used for its functional purposes. With respect to imported nonroad engines or nonroad vehicles, the term ''new'' means an engine or vehicle that is not covered by a certificate of conformity issued under this part at the time of importation, and that is manufactured after the effective date of a regulation issued under this part which is applicable to such engine or vehicle (or which would be applicable to such engine or vehicle had it been manufactured for importation into the United States).

New Class I engine family means any group of engines that employ a design that is different from engine families that the engine manufacturer has previously certified, and does not include any engine family certified on the basis of carryover data or any engine family that differs from another engine family solely as a result of a running change.

$NMHC+NO_X$ means nonmethane hydrocarbons plus oxides of nitrogen.

Nonroad engine means:

(1) Except as discussed in paragraph (2) of this definition, any internal combustion engine:

(i) In or on a piece of equipment that is self-propelled or serves a dual purpose by both propelling itself and performing another function (such as garden tractors, off-highway mobile cranes, and bulldozers); or

(ii) In or on a piece of equipment that is intended to be propelled while performing its function (such as lawnmowers and string trimmers); or

(iii) That, by itself or in or on a piece of equipment, is portable or transportable, meaning designed to be and capable of being carried or moved from one location to another. Indicia of transportability include, but are not limited to, wheels, skids, carrying handles, dolly, trailer, or platform.

(2) An internal combustion engine is not a nonroad engine if:

(i) The engine is used to propel a motor vehicle or a vehicle used solely for competition, or is subject to standards promulgated under section 202 of the Act; or

(ii) The engine is regulated by a federal New Source Performance Standard promulgated under section 111 of the Act; or

(iii) The engine otherwise included in paragraph (1)(iii) of this definition remains or will remain at a location for more than 12 consecutive months or a shorter period of time for an engine located at a seasonal source. A location is any site at a building, structure, facility, or installation. Any engine (or engines) that replaces an engine at a location and that is intended to perform the same or similar function as the engine replaced will be included in calculating the consecutive time period. An engine located at a seasonal source is an engine that remains at a seasonal source during the full annual operating period of the seasonal source. A seasonal source is a stationary

source that remains in a single location on a permanent basis (i.e., at least two years) and that operates at that single location approximately three months (or more) each year. This paragraph does not apply to an engine after the engine is removed from the location.

Nonroad vehicle means a vehicle that is powered by a nonroad engine as defined in this section and that is not a motor vehicle or a vehicle used solely for competition. Nonroad vehicle also includes equipment that is powered by nonroad engines.

Nonroad vehicle manufacturer means any person engaged in the manufacturing or assembling of new nonroad vehicles or importing such vehicles for resale, or who acts for and is under the control of any such person in connection with the distribution of such vehicles. A nonroad vehicle manufacturer does not include any dealer with respect to new nonroad vehicles received by such person in commerce.

Operating hours means:

(1) For engine storage areas or facilities, all times during which personnel other than custodial personnel are at work in the vicinity of the storage area or facility and have access to it.

(2) For all other areas or facilities, all times during which an assembly line is in operation or all times during which testing, maintenance, service accumulation, production or compilation of records, or any other procedure or activity related to certification testing, to translation of designs from the test stage to the production stage, or to engine manufacture or assembly is being carried out in a facility.

Overhead valve engine means an otto-cycle, four stroke engine in which the intake and exhaust valves are located above the combustion chamber within the cylinder head. Such engines are sometimes referred to as ''valve-in-head'' engines.

Phase 1 engine means any handheld or nonhandheld engine, that was produced under a certificate of conformity issued under the regulations in this part to the standard levels defined for Phase 1.

Phase 2 engine means any handheld and nonhandheld engine that was produced under a certificate of conformity under the regulations in this part to the standards defined for Phase 2 engines.

Presentation of credentials means the display of the document designating a person as an EPA enforcement officer or EPA authorized representative.

Round, rounded or rounding means, unless otherwise specified, that numbers will be rounded according to ASTM-E29–93a, which is incorporated by reference in this part pursuant to § 90.7.

Scheduled maintenance means any adjustment, repair, removal, disassembly, cleaning, or replacement of components or systems required by the manufacturer to be performed on a periodic basis to prevent part failure or vehicle or engine malfunction, or those actions anticipated as necessary to correct an overt indication of malfunction or failure for which periodic maintenance is not appropriate.

Side valve engine means an otto-cycle, four stroke engine in which the intake and exhaust valves are located to the side of the cylinder, not within the cylinder head. Such engines are sometimes referred to as ''L-head'' engines.

Small volume engine family means any handheld engine family or any nonhandheld engine family whose eligible production in a given model year are projected at the time of certification to be no more than 5,000 engines.

Small volume engine manufacturer means, for nonhandheld engines, any engine manufacturer whose total eligible production of nonhandheld engines are projected at the time of certification of a given model year to be no more than 10,000 nonhandheld engines. For handheld engines, the term *small volume engine manufacturer* means any engine manufacturer whose total eligible production of handheld engines are projected at the time of certification of a given model year to be no more than 25,000 handheld engines.

Small volume equipment manufacturer means, for nonhandheld equipment, any equipment manufacturer whose production of nonhandheld equipment subject to regulation under this part or powered by engines regulated under this part, does not exceed 5,000 pieces

for a given model year or annual production period excluding that equipment intended for introduction into commerce for use in a state that has established its own emission requirements applicable to such equipment or engines in such equipment, pursuant to a waiver granted by EPA under section 209(e) of the Clean Air Act. For handheld equipment, the term *small volume equipment manufacturer* has the same meaning except that it is limited to 25,000 pieces of handheld equipment rather than 5,000 pieces of nonhandheld equipment.

Small volume equipment model means, for nonhandheld equipment, any unique model of equipment whose production subject to regulations under this part or powered by engines regulated under this part, does not exceed 500 pieces for a given model year or annual production period excluding that equipment intended for introduction into commerce for use in a state that has established its own emission requirements applicable to such equipment or engines in such equipment, pursuant to a waiver granted by EPA under section 209(e) of the Clean Air Act. For handheld equipment, the term *small volume equipment model* has the same meaning except that it is limited to 5,000 pieces of handheld equipment, rather than 500 pieces of nonhandheld equipment.

Test engine means the engine or group of engines that a manufacturer uses during certification to determine compliance with emission standards.

Ultimate purchaser means, with respect to any new nonroad engine or new nonroad vehicle, the first person who in good faith purchases such new nonroad engine or vehicle for purposes other than resale.

Used solely for competition means exhibiting features that are not easily removed and that would render its use other than in competition unsafe, impractical, or highly unlikely.

Warranty period means the period of time the engine or part is covered by the warranty provisions.

[60 FR 34598, July 3, 1995, as amended at 64 FR 15235, Mar. 30, 1999; 65 FR 24305, Apr. 25, 2000]

§90.4 Treatment of confidential information.

(a) Any manufacturer may assert that some or all of the information submitted pursuant to this part is entitled to confidential treatment as provided by part 2, subpart B of this chapter.

(b) Any claim of confidentiality must accompany the information at the time it is submitted to EPA.

(c) To assert that information submitted pursuant to this subpart is confidential, a manufacturer must indicate clearly the items of information claimed confidential by marking, circling, bracketing, stamping, or otherwise specifying the confidential information. Furthermore, EPA requests, but does not require, that the submitter also provide a second copy of its submittal from which all confidential information has been deleted. If a need arises to publicly release nonconfidential information, EPA will assume that the submitter has accurately deleted the confidential information from this second copy.

(d) If a claim is made that some or all of the information submitted pursuant to this subpart is entitled to confidential treatment, the information covered by that confidentiality claim will be disclosed by the Administrator only to the extent and by means of the procedures set forth in part 2, subpart B of this chapter.

(e) Information provided without a claim of confidentiality at the time of submission may be made available to the public by EPA without further notice to the submitter, in accordance with §2.204(c)(2)(i)(A) of this chapter.

§90.5 Acronyms and abbreviations.

The following acronyms and abbreviations apply to part 90.

AECD—Auxiliary emission control device
ASME—American Society of Mechanical Engineers
ASTM—American Society for Testing and Materials
CAA—Clean Air Act
CAAA—Clean Air Act Amendments of 1990
CLD—chemiluminescent detector
CO—Carbon monoxide
CO_2—Carbon dioxide
EPA—Environmental Protection Agency
FTP—Federal Test Procedure
g/kW-hr—grams per kilowatt hour

HC—hydrocarbons
HCLD—heated chemiluminescent detector
HFID—heated flame ionization detector
ICI—independent Commercial Importer
NDIR—non-dispersive infrared analyzer
NIST—National Institute for Standards and Testing
NO—Nitric oxide
NO_2—Nitrogen dioxide
NO_X—Oxides of nitrogen
O_2—Oxygen
OEM—original equipment manufacturer
PMD—paramagnetic detector
SAE—Society of Automotive Engineers
SEA—Selective Enforcement Auditing
SI—spark-ignition
U.S.C.—United States Code
VOC—Volatile organic compounds
ZROD—zirconiumdioxide sensor

§ 90.6 Table and figure numbering; position.

(a) Tables for each subpart appear in an appendix at the end of the subpart. Tables are numbered consecutively by order of appearance in the appendix. The table title will indicate the topic.

(b) Figures for each subpart appear in an appendix at the end of the subpart. Figures are numbered consecutively by order of appearance in the appendix. The figure title will indicate the topic.

§ 90.7 Reference materials.

(a) *Incorporation by reference.* The documents in paragraph (b) of this section have been incorporated by reference. The incorporation by reference was approved by the Director of the Federal Register in accordance with 5 U.S.C. 552(a) and 1 CFR part 51. Copies may be inspected at U.S. EPA Air and Radiation Docket, room M–1500, 401 M St., SW., Washington D.C. 20460, or at the Office of the Federal Register, 800 North Capitol Street, NW., suite 700, Washington, DC.

(b) The following paragraphs and tables set forth the material that has been incorporated by reference in this part.

(1) *ASTM material.* The following table sets forth material from the American Society for Testing and Materials which has been incorporated by reference. The first column lists the number and name of the material. The second column lists the section(s) of this part, other than § 90.7, in which the matter is referenced. The second column is presented for information only and may not be all inclusive. Copies of these materials may be obtained from American Society for Testing and Materials, 1916 Race St., Philadelphia, PA 19103.

Document number and name	40 CFR part 90 reference
ASTM D86–93:	
Standard Test Method for Distillation of Petroleum Products	Appendix A to subpart D, Table 3.
ASTM D1319–89:	
Standard Test Method for Hydrocarbon Types in Liquid Petroleum Products by Fluorescent Indicator Adsorption.	Appendix A to subpart D, Table 3.
ASTM D2622–92:	
Standard Test Method for Sulfur in Petroleum Products by X-ray Spectrometry.	Appendix A to subpart D, Table 3.
ASTM D2699–92:	
Standard Test Method for Knock Characteristics of Motor Fuels by the Research Method.	Appendix A to subpart D, Table 3.
ASTM D2700–92:	
Standard Test Method for Knock Characteristics of Motor and Aviation Fuels by the Motor Method.	Appendix A to subpart D, Table 3.
ASTM D3231–89:	
Standard Test Method for Phosphorus in Gasoline	Appendix A to subpart D, Table 3.
ASTM D3606–92:	
Standard Test Method for Determination of Benzene and Toluene in Finished Motor and Aviation Gasoline by Gas Chromatography.	Appendix A to subpart D, Table 3.
ASTM D5191–93a:	
Standard Test Method for Vapor Pressure of Petroleum Products (Mini Method).	Appendix A to subpart D, Table 3.
ASTM E29–93a:	
Standard Practice for Using Significant Digits in Test Data to Determine Conformance with Specifications.	90.116; 90.509.

(2) *SAE material.* The following table sets forth material from the Society of Automotive Engineers which has been incorporated by reference. The first column lists the number and name of the material. The second column lists the section(s) of this part, other than § 90.7, in which the matter is referenced. The second column is presented for information only and may not be all inclusive. Copies of these materials may be obtained from Society of Automotive Engineers International, 400 Commonwealth Dr., Warrendale, PA 15096–0001.

Document number and name	40 CFR part 90 reference
SAE J1930 September 1991, Electrical/Electronic Systems Diagnostic Terms, Definitions, Abbreviations and Acronyms	90.114
SAE Paper 770141, Optimization of a Flame Ionization Detector for Determination of Hydrocarbon in Diluted Automotive Exhausts, Glenn D. Reschke, 1977	90.316

Subpart B—Emission Standards and Certification Provisions

§ 90.101 Applicability.

The requirements of subpart B are applicable to all nonroad engines and vehicles subject to the provisions of subpart A of part 90.

§ 90.102 Definitions.

The definitions in subpart A of part 90 apply to this subpart. All terms not defined herein or in subpart A have the meaning given them in the Act. The following definitions also apply to this subpart.

Attitudinal control means the operator regulates either the horizontal or vertical position of the equipment, or both.

Carry means the operator completely bears the weight of the equipment, including the engine.

Support means that the operator holds the equipment in position so as to prevent it from falling, slipping or sinking. It is not necessary for the entire weight of the equipment to be borne by the operator.

§ 90.103 Exhaust emission standards.

(a) Exhaust emissions for new Phase 1 and Phase 2 nonroad spark ignition engines at or below 19 kilowatts (kW), shall not exceed the following levels. Throughout this part, NMHC+NO_X standards are applicable only to natural gas fueled engines at the option of the manufacturer, in lieu of HC+NO_X standards.

TABLE 1—PHASE 1 EXHAUST EMISSION STANDARDS

[Grams per kilowatt-hour]

Engine displacement class	Hydrocarbons+oxides of nitrogen (HC+NO_X)	Hydrocarbons	Carbon monoxide	Oxides of nitrogen (NO_X)
I	16.1		519	
II	13.4		519	
III		295	805	5.36
IV		241	805	5.36
V		161	603	5.36

TABLE 2—PHASE 2 CLASS I–A, CLASS I–B, AND CLASS I ENGINE EXHAUST EMISSION STANDARDS

[grams per kilowatt-hour]

Engine class	HC+NO_X	NMHC+NO_X	CO	Effective date
I	16.1	14.8	610	August 1, 2007; in addition, any Class I engine family initially produced on or after August 1, 2003 must meet the Phase 2 Class I standards before they may be introduced into commerce.
I–A	50		610	2001 Model Year.
I–B	40	37	610	2001 Model Year.

TABLE 3—PHASE 2 CLASS II ENGINE EXHAUST EMISSION STANDARDS BY MODEL YEAR

]grams per kilowatt-hour]

Engine Class	Emission requirement	Model Year				
		2001	2002	2003	2004	2005 and later
II	HC +NO_X	18.0	16.6	15.0	13.6	12.1
	NMHC+NO_X	16.7	15.3	14.0	12.7	11.3
	CO	610	610	610	610	610

TABLE 4—PHASE 2 HANDHELD EXHAUST EMISSION STANDARDS BY MODEL YEAR

[grams per kilowatt-hour]

Engine class	Emission requirement	Model year					
		2002	2003	2004	2005	2006	2007 and later
Class III	HC+NO_X	238	175	113	50	50	50
	CO	805	805	805	805	805	805
Class IV	HC+NO_X	196	148	99	50	50	50
	CO	805	805	805	805	805	805
Class V	HC+NO_X			143	119	96	72
	CO			603	603	603	603

(1) Each engine displacement class has a unique set of exhaust emission standards. Boundaries for each class are indicated in § 90.116(b).

(2) Emission standards for classes III, IV, V may be used only if an engine meets at least one of the following requirements:

(i) The engine must be used in a piece of equipment that is carried by the operator throughout the performance of its intended function(s);

(ii) The engine must be used in a piece of equipment that must operate multipositionally, such as upside down or sideways, to complete its intended function(s);

(iii) The engine must be used in a piece of equipment for which the combined engine and equipment dry weight is under 14 kilograms, no more than two wheels are present on the equipment, and at least one of the following attributes is also present:

(A) The operator must alternately provide support or carry the equipment throughout the performance of its intended function(s); (B) The operator must provide support or attitudinal control for the equipment throughout the performance of its intended function(s); and

(C) The engine must be used in a generator or pump;

(iv) The engine must be used to power one-person augers, with a combined engine and equipment dry weight under 20 kilograms;

(v) Where a piece of equipment otherwise meeting the requirements of paragraph (a)(2)(iii) or (a)(2)(iv) of this section exceeds the applicable weight limit, emission standards for class III, IV or V, as applicable, may still apply if the equipment exceeds the weight limit by no more than the extent necessary to allow for the incremental weight of a four stroke engine or the incremental weight of a two stroke engine having enhanced emission control acceptable to the Administrator. Any manufacturer utilizing this provision to exceed the subject weight limitations shall maintain and make available to the Administrator upon request, documentation to substantiate that the exceedance of either weight limitation is a direct result of application of a four stroke or enhanced two stroke engine having the same, less or very similar power to two stroke engines that could otherwise be used to power the equipment and remain within the weight limitations.

(3) Notwithstanding paragraph (a)(2) of this section, two stroke engines used to power lawnmowers or other nonhandheld equipment may meet Phase 1 Class III, IV or V standards and

requirements, as appropriate, through model year 2002 subject to the provisions of § 90.107(e), (f) and (h). Such engines shall not be included in any computations of Phase 2 averaging, banking, or trading credits or eligible production.

(4) Notwithstanding paragraph (a)(2) of this section, two-stroke engines used to power snowthrowers may meet class III, IV, or V standards.

(5) Notwithstanding paragraph (a)(2) of this section, engines used exclusively to power products which are used exclusively in wintertime, such as snowthrowers and ice augers, at the option of the engine manufacturer, need not certify to or comply with standards regulating emissions of HC, NO_X, $HC+NO_X$ or $NMHC+NO_X$, as applicable. If the manufacturer exercises the option to certify to standards regulating such emissions, such engines must meet such standards. If the engine is to be used in any equipment or vehicle other than an exclusively wintertime product such as a snowthrower or ice auger, it must be certified to the applicable standard regulating emissions of HC, NO_X, $HC+NO_X$ or $NMHC+NO_X$ as applicable.

(6) In lieu of certifying to the applicable Phase 2 standards, small volume engine manufacturers as defined in this part may, at their option, certify their engine families as Phase 1 engines until the 2010 model year for nonhandheld engine families excluding Class I–A and Class I–B engine families, until the 2008 model year for Class III and Class IV engine families, and until the 2010 model year for Class V engine families. Such engines shall not exceed the applicable Phase 1 standards and are excluded from the averaging, banking and trading program and any related credit calculations. Beginning with the 2010 model year for nonhandheld engine families, the 2008 model year for Class III and Class IV engine families, and the 2010 model year for Class V engine families, these engines must meet the applicable Phase 2 standards.

(7) In lieu of certifying to the applicable Phase 2 standards, manufacturers of small volume engine families, as defined in this part may, at their option, certify their small volume engine families as Phase 1 engines until the 2010 model year for nonhandheld engine families excluding Class I–A and Class I–B engine families, until the 2008 model year for Class III and Class IV engine families, and until the 2010 model year for Class V engine families. Such engines shall not exceed the applicable Phase 1 standards and are excluded from the averaging, banking and trading program and any related credit calculations. Beginning with the 2010 model year for nonhandheld engine families, the 2008 model year for Class III and Class IV engine families, and the 2010 model year for Class V engine families, these engines must meet the applicable Phase 2 standards.

(8) Notwithstanding the standards shown in Table 3 of this section, the $HC+NO_X$ ($NMHC+NO_X$) standard for Phase 2 Class II side valve engine families with annual production of 1000 or less shall be 24.0 g/kW-hr (22.0 g/kW-hr) for model years 2010 and later. Engines produced subject to this provision may not exceed this standard and are excluded from the averaging, banking and trading program and any related credit calculations.

(b) Exhaust emissions will be measured using the procedures set forth in subpart E of this part.

[60 FR 34598, July 3, 1995, as amended at 61 FR 58300, Nov. 13, 1996; 62 FR 42643, Aug. 7, 1997; 64 FR 15236, Mar. 30, 1999; 65 FR 24305, Apr. 25, 2000]

§ 90.104 Compliance with emission standards.

Paragraphs (a) through (c) of this section apply to Phase 1 engines only. Paragraphs (d) through (h) of this section apply only to Phase 2 engines.

(a) If all test engines representing an engine family have emissions less than or equal to each emission standard in a given engine displacement class, that family complies with that class of emission standards.

(b) If any test engine representing an engine family has emissions greater than any one emission standard in a given engine displacement class, that family will be deemed not in compliance with that class of emission standards.

(c) If catalysts are used in an engine family, the engine manufacturer must

affirm that catalyst durability has been confirmed on the basis of the evaluation procedure that is specified in subpart E of this part.

(d) The exhaust emission standards (FELs, where applicable) for Phase 2 engines set forth in this part apply to the emissions of the engines for their full useful lives as determined pursuant to § 90.105.

(e) For all Phase 2 engines, if all test engines representing an engine family have emissions, when properly tested according to procedures in this part, less than or equal to each Phase 2 emission standard (FEL, where applicable) in a given engine class and given model year, when multiplicatively adjusted by the deterioration factor determined in this section, that family complies with that class of emission standards for purposes of certification. If any test engine representing an engine family has emissions adjusted multiplicatively by the deterioration factor determined in this section, greater than any one emission standard (FEL, where applicable) for a given displacement class, that family does not comply with that class of emission standards.

(f) Each engine manufacturer must comply with all provisions of the averaging, banking and trading program outlined in subpart C of this part for each engine family participating in that program.

(g)(1) Small volume engine manufacturers and small volume engine families may, at their option, take deterioration factors for $HC+NO_X$ ($NMHC+NO_X$) and CO from Table 1 or Table 2 of this paragraph (g), or they may calculate deterioration factors for $HC+NO_X$ ($NMHC+NO_X$) and CO according to the process described in paragraph (h) of this section. For technologies that are not addressed in Table 1 or Table 2 of this paragraph (g), the manufacturer may ask the Administrator to assign a deterioration factor prior to the time of certification. The provisions of this paragraph (g) do not apply to Class I–A and Class I–B engines.

(2) Table 1 follows:

TABLE 1: NONHANDHELD ENGINE $HC+NO_X$ ($NMHC+NO_X$) AND CO ASSIGNED DETERIORATION FACTORS FOR SMALL VOLUME MANUFACTURERS AND SMALL VOLUME ENGINE FAMILIES

Engine class	Side valve engines		Overhead valve engines		Engines with aftertreatment
	$HC+NO_X$ ($NMHC+NO_X$)	CO	$HC+NO_X$ ($NMHC+NO_X$)	CO	
Class I	2.1	1.1	1.5	1.1	Dfs must be calculated using the formula in § 90.104(g)(4).
Class II	1.6	1.1	1.4	1.1	

(3) Table 2 follows:

TABLE 2—HANDHELD ENGINE $HC+NO_X$ AND CO ASSIGNED DETERIORATION FACTORS FOR SMALL VOLUME MANUFACTURERS AND SMALL VOLUME ENGINE FAMILIES

Engine class	Two-stroke engines[1]		Four-stroke engines		Engines with aftertreatment
	$HC+NO_X$	CO	$HC+NO_X$	CO	
Class III	1.1	1.1	1.5	1.1	Dfs must be calculated using the formula in § 90.104(g)(4).
Class IV	1.1	1.1	1.5	1.1	
Class V	1.1	1.1	1.5	1.1	

[1] Two-stroke technologies to which these assigned deterioration factors apply include conventional two-strokes, compression wave designs, and stratified scavenging designs.

(4) Formula for calculating deterioration factors for engines with aftertreatment:

$$DF = [(NE * EDF) - (CC * F)]/(NE - CC)$$

Where:

DF = deterioration factor.

NE = new engine emission levels prior to the catalyst (g/kW-hr)

EDF = deterioration factor for engines without catalyst as shown in Table 1 or Table 2 of this paragraph (g)

CC = amount converted at 0 hours in g/kW-hr.

F = 0.8 for HC (NMHC), 0.0 for NO_X, and 0.8 for CO for all classes of engines.

(h)(1) Manufacturers shall obtain an assigned df or calculate a df, as appropriate, for each regulated pollutant for all Phase 2 engine families. Such dfs shall be used for certification, production line testing, and Selective Enforcement Auditing.

(2) For engines not using assigned dfs from Table 1 or Table 2 of paragraph (g) of this section, dfs shall be determined as follows:

(i) On at least one test engine representing the configuration chosen to be the most likely to exceed $HC+NO_X$ ($NMHC+NO_X$) emission standards, (FELs where applicable), and constructed to be representative of production engines pursuant to §90.117, conduct full Federal test procedure emission testing pursuant to the regulations of subpart E of this part at the number of hours representing stabilized emissions pursuant to §90.118. If more than one engine is tested, average the results and round to the same number of decimal places contained in the applicable standard, expressed to one additional significant figure;

(ii) Conduct such emission testing again following aging the engine. The aging procedure should be designed to allow the manufacturer to appropriately predict the in-use emission deterioration expected over the useful life of the engine, taking into account the type of wear and other deterioration mechanisms expected under typical consumer use which could affect emissions performance. If more than one engine is tested, average the results and round to the same number of decimal places contained in the applicable standard, expressed to one additional significant figure;

(iii) Divide the full useful life emissions (average emissions, if applicable) for each regulated pollutant by the stabilized emissions (average emissions, if applicable) and round to two significant figures. The resulting number shall be the df, unless it is less than 1.0, in which case the df shall be 1.0.

(iv) At the manufacturer's option additional emission test points can be scheduled between the stabilized emission test point and the full useful life test period. If intermediate tests are scheduled, the test points must be evenly spaced over the full useful life period (plus or minus 2 hours) and one such test point shall be at one-half of full useful life (plus or minus 2 hours). For each pollutant $HC+NO_X$ ($NMHC+NO_X$) and CO, a line must be fitted to the data points treating the initial test as occurring at hour zero, and using the method of least-squares. The deterioration factor is the calculated emissions durability period divided by the calculated emissions at zero hours.

(3) EPA may reject a df if it has evidence that the df is not appropriate for that family within 30 days of receipt from the manufacturer. The manufacturer must retain actual emission test data to support its choice of df and furnish that data to the Administrator upon request. Manufacturers may request approval by the Administrator of alternate procedures for determining deterioration. Any submitted df not rejected by EPA within 30 days shall be deemed to have been approved.

(4) Calculated deterioration factors may cover families and model years in addition to the one upon which they were generated if the manufacturer submits a justification acceptable to the Administrator in advance of certification that the affected engine families can be reasonably expected to have similar emission deterioration characteristics.

(5) Engine families that undergo running changes need not generate a new df if the manufacturer submits a justification acceptable to the Administrator concurrent with the running change that the affected engine families can be reasonably expected to have similar emission deterioration characteristics.

[60 FR 34598, July 3, 1995, as amended by 64 FR 15237, Mar. 30, 1999; 65 FR 24306, Apr. 25, 2000]

§90.105 Useful life periods for Phase 2 engines.

(a) Manufacturers shall declare the applicable useful life category for each

engine family at the time of certification as described in this section. Such category shall be the category which most closely approximates the expected useful lives of the equipment into which the engines are anticipated to be installed as determined by the engine manufacturer. Manufacturers shall retain data appropriate to support their choice of useful life category for each engine family. Such data shall be furnished to the Administrator upon request.

(1) For nonhandheld engines: Manufacturers shall select a useful life category from Table 1 of this section at the time of certification. Engines with gross power output greater than 19 kW that have an engine displacement less than or equal to one liter that optionally certify under this part as allowed in § 90.1(a), must certify to a useful life period of 1,000 hours.

(2) Table 1 follows:

TABLE 1: USEFUL LIFE CATEGORIES FOR NONHANDHELD ENGINES [HOURS]

Class I	125	250	500
Class II	250	500	1000
Class I–A	50	125	300
Class I–B	125	250	500

(3) For handheld engines: Manufacturers shall select a useful life category from Table 2 of this paragraph (a) at the time of certification.

(4) Table 2 follows:

TABLE 2: USEFUL LIFE CATEGORIES FOR HANDHELD ENGINES (HOURS)

Class III	50	125	300
Class IV	50	125	300
Class V	50	125	300

(5) Data to support a manufacturer's choice of useful life category, for a given engine family, may include but are not limited to:

(i) Surveys of the life spans of the equipment in which the subject engines are installed;

(ii) Engineering evaluations of field aged engines to ascertain when engine performance deteriorates to the point where usefulness and/or reliability is impacted to a degree sufficient to necessitate overhaul or replacement;

(iii) Warranty statements and warranty periods;

(iv) Marketing materials regarding engine life;

(v) Failure reports from engine customers; and

(vi) Engineering evaluations of the durability, in hours, of specific engine technologies, engine materials or engine designs.

(b) [Reserved]

[64 FR 15238, Mar. 30, 1999, as amended at 65 FR 24307, Apr. 25, 2000]

§ 90.106 Certificate of conformity.

(a)(1) Except as provided in § 90.2(b), every manufacturer of new engines produced during or after model year 1997 must obtain a certificate of conformity covering such engines; however, engines manufactured during an annual production period beginning prior to September 1, 1996 are not required to be certified.

(2) Except as required in paragraph (b)(3) of this section, Class II engines manufactured during an annual production period beginning prior to September 1, 2000 are not required to meet Phase 2 requirements.

(b)(1) The annual production period begins either when an engine family is first produced or on January 2 of the calendar year preceding the year for which the model year is designated, whichever date is later. The annual production period ends either when the last engine is produced or on December 31 of the calendar year for which the model year is named, whichever date is sooner.

(2) Notwithstanding paragraph (b)(1) of this section, annual production periods beginning prior to September 1, 1996 may not exceed 12 months in length.

(3) Manufacturers who commence an annual production period for a Class II engine family between January 1, 2000 and September 1, 2000 must meet Phase 2 requirements for that family only if that production period will exceed 12 months in length.

(c) Except as provided in paragraph (d) of this section, a certificate of conformity is deemed to cover the engines named in such certificate and produced during the annual production period, as defined in paragraph (b) of this section.

(d) Except as provided in paragraph (e) of this section, the certificate of conformity must be obtained from the Administrator prior to selling, offering for sale, introducing into commerce, or importing into the United States the new engine. Engines produced prior to the effective date of a certificate of conformity may also be covered by the certificate, once it is effective, if the following conditions are met:

(1) The engines conform in all respects to the engines described in the application for the certificate of conformity.

(2) The engines are not sold, offered for sale, introduced into commerce, or delivered for introduction into commerce prior to the effective date of the certificate of conformity.

(3) EPA is notified prior to the beginning of production when such production will start, and EPA is provided a full opportunity to inspect and/or test the engines during and after their production. EPA must have the opportunity to conduct SEA production line testing as if the vehicles had been produced after the effective date of the certificate.

(e) Engines that are certified by EPA prior to January 2, 1996 for model year 1997 may be delivered for introduction into commerce prior to January 2, 1996 once a certificate of conformity has been issued.

(f) Engines imported by an original equipment manufacturer after December 31 of the calendar year for which the model year is named are still covered by the certificate of conformity as long as the production of the engine was completed before December 31 of that year.

[60 FR 34598, July 3, 1995, as amended at 64 FR 15238, Mar. 30, 1999]

§ 90.107 Application for certification.

(a) For each engine family, the engine manufacturer must submit to the Administrator a completed application for a certificate of conformity.

(b) The application must be approved and signed by the authorized representative of the manufacturer.

(c) The application must be updated and corrected by amendment as provided in § 90.122 to accurately reflect the manufacturer's production.

(d) *Required content.* Each application must include the following information:

(1) A description of the basic engine design including, but not limited to, the engine family specifications;

(2) An explanation of how the emission control system operates, including a detailed description of all emission control system components (Detailed component calibrations are not required to be included; they must be provided if requested, however.), each auxiliary emission control device (AECD), and all fuel system components to be installed on any production or test engine(s);

(3) Proposed test engine(s) selection and the rationale for the test engine(s) selection;

(4) Special or alternate test procedures, if applicable;

(5) The service accumulation period necessary to break in the test engine(s) and stabilize emission levels;

(6) A description of all adjustable operating parameters including the following:

(i) The nominal or recommended setting and the associated production tolerances;

(ii) The intended physically adjustable range;

(iii) The limits or stops used to establish adjustable ranges;

(iv) Production tolerances of the limits or stops used to establish each physically adjustable range;

(v) Information relating to why the physical limits or stops used to establish the physically adjustable range of each parameter, or any other means used to inhibit adjustment, are effective in preventing adjustment of parameters to settings outside the manufacturer's intended physically adjustable ranges on in-use engines; and

(vi) Information relating to altitude kits to be certified, including: a description of the altitude kit; appropriate part numbers; the altitude ranges at which the kits must be installed on or removed from the engine for proper emissions and engine performance; statements to be included in the owner's manual for the engine/equipment combination (and other maintenance related literature) that: declare the altitude ranges at which

the kit must be installed or removed; and state that the operation of the engine/equipment at an altitude that differs from that at which it was certified, for extended periods of time, may increase emissions; and a statement that an engine with the altitude kit installed will meet each emission standard throughout its useful life (the rationale for this assessment must be documented and retained by the manufacturer, and provided to the Administrator upon request);

(7) The proposed engine information label;

(8) All test data obtained by the manufacturer on each test engine;

(9) A statement that the test engine(s), as described in the manufacturer's application for certification, has been tested in accordance with the applicable test procedures, utilizing the fuels and equipment required under subparts D and E of this part, and that on the basis of such tests the engine(s) conforms to the requirements of this part;

(10) An unconditional statement certifying that all engines in the engine family comply with all requirements of this part and the Clean Air Act;

(11) This paragraph (d)(11) is applicable only to Phase 2 engines.

(i) Engine manufacturers participating in the averaging, banking and trading program as described in subpart C of this part shall declare the applicable Family Emission Limit (FEL) for $HC+NO_X$ ($NMHC+NO_X$).

(ii) Provide the applicable useful life as determined under § 90.105.

(e)(1) In addition to the information specified in paragraph (d) of this section, manufacturers of two-stroke lawnmower engines must submit with their application for a certificate of conformity:

(i) For model year 1997, information establishing the highest number of two-stroke lawnmower engines produced in a single annual production period from 1992 through 1994. This number will be known as the production baseline.

(ii) For model years 1998 through 2002, information documenting the previous year's production and projected production for the current year.

(2) In model year 1997, two-stroke lawnmower engine manufacturers may produce up to 100 percent of their production baseline established under paragraph (e)(1)(i) of this section.

(3) In model year 1998, two-stroke lawnmower engine manufacturers may produce up to 75 percent of their production baseline.

(4) From model years 1999 through 2002, two-stroke lawnmower engine manufacturers may produce up to 50 percent of their production baseline.

(5) In model year 2003, two-stroke lawnmower engine manufacturers must meet class I or II standards specified in § 90.103(a). If in model year 2003 those standards have been superseded by Phase 2 standards, two-stroke lawnmower engine manufacturers must meet the Phase 2 standards that are equivalent to the class I or II standards.

(f) At the Administrator's request, the manufacturer must supply such additional information as may be required to evaluate the application including, but not limited to, projected nonroad engine production.

(g)(1) The Administrator may modify the information submission requirements of paragraph (d) of this section, provided that all of the information specified therein is maintained by the engine manufacturer as required by § 90.121, and amended, updated, or corrected as necessary.

(2) For the purposes of this paragraph, § 90.121(a)(1) includes all information specified in paragraph (d) of this section whether or not such information is actually submitted to the Administrator for any particular model year.

(3) The Administrator may review an engine manufacturer's records at any time. At the Administrator's discretion, this review may take place either at the manufacturer's facility or at another facility designated by the Administrator.

(h)(1) The Administrator may, upon receipt of a written request from an equipment manufacturer, accompanied by sufficient documentation, permit two stroke engines produced for nonhandheld equipment other than lawnmowers to meet the standards specified in § 90.103(a)(3) under the

schedule outlined in paragraph (e) of this section. The equipment manufacturer must demonstrate to the satisfaction of the Administrator that:

(i) Four stroke engines for such equipment are not available with suitable physical or performance characteristics; and

(ii) The equipment can not be converted to use four stroke engines without substantial redesign for which additional lead time is necessary to avoid economic hardship.

(2) The Administrator may waive the phase-in percentages of paragraphs (e)(3) and (e)(4) of this section for engines used in low volume nonhandheld equipment other than lawnmowers where the equipment manufacturer demonstrates to the satisfaction of the Administrator that compliance with the production cap is not economically feasible.

[60 FR 34598, July 3, 1995, as amended at 61 FR 20742, May 8, 1996; 62 FR 42643, Aug. 7, 1997; 64 FR 15238, Mar. 30, 1999; 65 FR 24307, Apr. 25, 2000]

§ 90.108 Certification.

(a) If, after a review of the manufacturer's submitted application, information obtained from any inspection, and such other information as the Administrator may require, the Administrator determines that the application is complete and that the engine family meets the requirements of this part and the Clean Air Act, the Administrator shall issue a certificate of conformity.

(b) The Administrator shall give a written explanation when certification is denied. The manufacturer may request a hearing on a denial. (See § 90.124 for procedure.)

(c) For certificates issued for engine families included in the averaging, banking and trading program as described in subpart C of this part:

(1) Failure to comply with all applicable averaging, banking and trading provisions in this part will be considered to be a failure to comply with the terms and conditions upon which the certificate was issued, and the certificate may be determined to be void *ab initio*.

(2) The manufacturer shall bear the burden of establishing to the satisfaction of the Administrator that the conditions upon which the certificate was granted were satisfied or waived.

(d) The Administrator may, upon request by a manufacturer, waive any requirement of this part otherwise necessary for the issuance of a certificate. The Administrator may set such conditions in a certificate as he or she deems appropriate to assure that the waived requirements are either satisfied or are demonstrated, for the subject engines, to be inappropriate, irrelevant or met by the application of a different requirement under this chapter. The Administrator may indicate on such conditional certificates that failure to meet these conditions may result in suspension or revocation or the voiding *ab initio* of the certificate.

[60 FR 34598, July 3, 1995, as amended at 64 FR 15238, Mar. 30, 1999]

§ 90.109 Requirement of certification—closed crankcase.

(a) An engine's crankcase must be closed.

(b) For purposes of this section, ''crankcase'' means the housing for the crankshaft and other related internal parts.

(c) Notwithstanding paragraph (a) of this section, the Administrator will allow open crankcases for engines used exclusively to power snowthrowers based upon a manufacturer's demonstration that all applicable emission standards will be met by the engine for the combination of emissions from the crankcase, and exhaust emissions measured using the procedures in subpart E of this part. This demonstration may be made based upon best engineering judgment. Upon request of the Administrator, the manufacturer must provide an explanation of any procedure or methodology used to determine that the total CO emissions from the crankcase and the exhaust are below the applicable standard for CO.

[60 FR 34598, July 3, 1995, as amended at 61 FR 58301, Nov. 13, 1996]

§ 90.110 Requirement of certification—prohibited controls.

(a) An engine may not be equipped with an emission control device, system, or element of design for the purpose of complying with emission standards if such device, system, or element of design will cause or contribute to an unreasonable risk to public health, welfare, or safety in its operation or function.

(b) An engine with an emission control device, system, or element of design may not emit any noxious or toxic substance which would not be emitted in the operation of such engine in the absence of the device, system, or element of design except as specifically permitted by regulation.

§ 90.111 Requirement of certification—prohibition of defeat devices.

(a) An engine may not be equipped with a defeat device.

(b) For purposes of this section, ''defeat device'' means any device, system, or element of design which senses operation outside normal emission test conditions and reduces emission control effectiveness.

(1) Defeat device includes any auxiliary emission control device (AECD) that reduces the effectiveness of the emission control system under conditions which may reasonably be expected to be encountered in normal operation and use unless such conditions are included in the test procedure.

(2) Defeat device does not include such items which either operate only during engine starting or are necessary to protect the engine (or vehicle in which it is installed) against damage or accident during its operation.

§ 90.112 Requirement of certification—adjustable parameters.

(a) Engines equipped with adjustable parameters must comply with all requirements of this subpart for any specification within the physically available range.

(b) An operating parameter is not considered adjustable if it is permanently sealed by the manufacturer or otherwise not normally accessible using ordinary tools.

(c) The Administrator may require that adjustable parameters be set to any specification within the adjustable range during certification or a selective enforcement audit to determine compliance with the requirements of this subpart.

§ 90.113 In-use testing program for Phase 1 engines.

(a) This section applies only to Phase 1 engines. In-use testing provisions for Phase 2 engines are found in subpart M of this part. At the time of certification the engine manufacturer may propose which engine families should be included in an in-use test program. EPA will approve a manufacturer's test program if the selected engine families represent an adequate consideration of the elements listed in paragraphs (b) and (c) of this section.

(b) *Number of engines to be tested.* The number of engines to be tested by a manufacturer is determined by the following method:

(1) For an engine manufacturer with total projected annual production of more than 75,000 engines destined for the United States market for that model year, the minimum number of engines to be tested may be the lowest of the numbers determined in paragraph (b)(1)(i), (ii) or (iii) of this section:

(i) Divide the manufacturer's total projected annual production of small SI engines destined for the United States market for that model year by 50,000, and round to the nearest whole number;

(ii) Test five engines each from 25 percent of all engine families certified in that model year; and

(iii) Test three engines each from 50 percent of all engine families certified in that model year.

(2) An engine manufacturer with total projected annual production of 75,000 engines or less destined for the United States market for that model year may test a minimum of two engines.

(c) *Criteria for selecting test engines.* An engine manufacturer may select test engines from engine families utilizing the following criteria and in the order specified:

(1) Engine families using emission control technology which most likely will be used on Phase 2 engines;

(2) Engine families using aftertreatment;

(3) Engine families certified to different emission standards;

(4) Different engine designs (such as sidevalve head versus overhead valve engines);

(5) Engine families using emission control technology specifically installed to achieve compliance with emission standards of this part;

(6) The engine family with the highest projected annual sales; and

(7) Engine families which meet the above criteria, but have not been included in prior model year in-use testing programs as required by these provisions.

(d) *Collection of in-use engines.* An engine manufacturer may procure in-use engines which have been operated for between half and three-quarters of the engine's advertised (or projected) useful life. All testing may be completed within three years from the date the certificate is first issued for an engine family undergoing in-use testing.

(1) Test engines may be procured from sources not associated with the engine manufacturer or vehicle manufacturer, except that with prior approval of the Administrator, an engine manufacturer with annual sales of less than 50,000 engines may obtain in-use engines associated with itself or its vehicle manufacturer.

(2) A test engine should have a maintenance history representative of actual in-use conditions.

(i) A manufacturer may question the end user regarding the accumulated usage, maintenance, operating conditions, and storage of the test engines.

(ii) Documents used in the procurement process may be maintained as required in § 90.121.

(3) *Maintenance and testing of test engines.*

(i) The manufacturer may perform minimal set-to-spec maintenance on a test engine. Maintenance may include only that which is listed in the owner's instructions for engines with the amount of service and age of the acquired test engine.

(ii) Documentation of all maintenance and adjustments may be maintained and retained as required by § 90.121.

(4) One valid emission test may be conducted for each in-use engine.

(5) If a selected in-use engine fails to comply with any applicable certification emission standard, the manufacturer may determine the reason for noncompliance. The manufacturer may report all determinations for noncompliance in its annual in-use test result report as described below.

(e) *In-use test program reporting.* The manufacturer may submit to the Administrator by January 30 of each calendar year all emission testing results generated from in-use testing. The following information may be reported for each test engine:

(1) Engine family;

(2) Model;

(3) Engine serial number;

(4) Date of manufacture;

(5) Estimated hours of use;

(6) Results of all emission testing;

(7) Summary of all maintenance and/or adjustments performed;

(8) Summary of all modifications and/or repairs; and

(9) Determinations of compliance and/or noncompliance.

(f) The Administrator may approve and/or suggest modifications to a manufacturer's in-use testing program.

[60 FR 34598, July 3, 1995, as amended at 64 FR 15239, Mar. 30, 1999]

§ 90.114 Requirement of certification—engine information label.

(a) The engine manufacturer must affix at the time of manufacture a permanent and legible label identifying each nonroad engine. The label must meet the following requirements:

(1) Be attached in such a manner that it cannot be removed without destroying or defacing the label;

(2) Be durable and readable for the entire engine life;

(3) Be secured to an engine part necessary for normal engine operation and not normally requiring replacement during engine life;

(4) Be written in English; and

(5) Be located so as to be readily visible to the average person after the engine is installed in the vehicle.

(b) If the nonroad vehicle obscures the label on the engine, the nonroad vehicle manufacturer must attach a supplemental label so that this label is

readily visible to the average person. The supplemental label must:

(1) Be attached in such a manner that it cannot be removed without destroying or defacing the label;

(2) Be secured to a vehicle part necessary for normal operation and not normally requiring replacement during the vehicle life; and

(3) Be identical in content to the label which was obscured.

(c) The label must contain the following information:

(1) The heading ''Important Engine Information;''

(2) The full corporate name and trademark of the engine manufacturer;

(3) The statement, ''This (specify vehicle or engine, as applicable) is certified to operate on (specify operating fuel(s));''

(4) Identification of the Exhaust Emission Control System (Abbreviations may be used and must conform to the nomenclature and abbreviations provided in the Society of Automotive Engineers procedure J1930, ''Electrical/Electronic Systems Diagnostic Terms, Definitions, Abbreviations and Acronyms,'' September 1991. This procedure has been incorporated by reference. See § 90.7.);

(5) All engine lubricant requirements;

(6) Date of engine manufacture [day (optional), month and year];

(7) The statement ''This engine conforms to [model year] U.S. EPA regulations for small nonroad engines.'';

(8) EPA standardized engine family designation;

(9) Engine displacement [in cubic centimeters];

(10) Other information concerning proper maintenance and use or indicating compliance or noncompliance with other standards may be indicated on the label;

(11) For Phase 2 engines, the useful life category as determined by the manufacturer pursuant to § 90.105. Such useful life category shall be shown by one of the following statements to be appended to the statement required under paragraph (c)(7) of this section:

(i) ''EMISSIONS COMPLIANCE PERIOD: [useful life] HOURS''; or

(ii) ''EMISSIONS COMPLIANCE PERIOD: CATEGORY [fill in C, B or A as indicated and appropriate from the tables in § 90.105], REFER TO OWNER'S MANUAL FOR FURTHER INFORMATION'';

(d) If there is insufficient space on the engine (or on the vehicle where a supplemental label is required under paragraph (b) of this section) to accommodate a label including all the information required in paragraph (c) of this section, the manufacturer may delete or alter the label as indicated in this paragraph. The information deleted from the label must appear in the owner's manual.

(1) Exclude the information required in paragraphs (c)(3), (4), and (5) of this section. The fuel or lubricant may be specified elsewhere on the engine.

(2) Exclude the information required by paragraph (c)(6) of this section, if the date the engine was manufactured is stamped on the engine.

(e) The Administrator may, upon request, waive or modify the label content requirements of paragraphs (c) and (d) of this section, provided that the intent of such requirements is met.

(f) Manufacturers electing to use the labeling language of paragraph (c)(11)(ii) of this section must provide in the documents intended to be conveyed to the ultimate purchaser, the statement:

(1) For nonhandheld engines: The Emissions Compliance Period referred to on the Emissions Compliance label indicates the number of operating hours for which the engine has been shown to meet Federal emission requirements. For engines less than 66 cc, Category C=50 hours, B=125 hours, and A=300 hours. For engines equal to or greater than 66 cc but less than 225 cc displacement, Category C=125 hours, B=250 hours, and A=500 hours. For engines of 225 cc or more, Category C=250 hours, B=500 hours, and A=1000 hours.

(2) For handheld engines: The Emissions Compliance Period referred to on the Emissions Compliance label indicates the number of operating hours for which the engine has been shown to meet Federal emission requirements. Category C=50 hours, B=125 hours, and A=300 hours.

(3) The manufacturer must provide, in the same document as the statement

in paragraph (f)(1) or (f)(2) of this section, a statement of the engine's displacement or an explanation of how to readily determine the engine's displacement. The Administrator may approve alternate language to the statement in paragraph (f)(1) or (f)(2) of this section, provided that the alternate language provides the ultimate purchaser with a clear description of the number of hours represented by each of the three letter categories for the subject engine's displacement.

[60 FR 34598, July 3, 1995, as amended at 64 FR 15239, Mar. 30, 1999; 65 FR 24307, Apr. 25, 2000]

§ 90.115 Requirement of certification—supplying production engines upon request.

Upon the Administrator's request, the manufacturer must supply a reasonable number of production engines for testing and evaluation. These engines must be representative of typical production and supplied for testing at such time and place and for such reasonable periods as the Administrator may require.

§ 90.116 Certification procedure—determining engine displacement, engine class, and engine families.

(a) Engine displacement must be calculated using nominal engine values and rounded to the nearest whole cubic centimeter in accordance with ASTM E29–93a. This procedure has been incorporated by reference. See § 90.7.

(1) Class I–A—nonhandheld equipment engines less than 66 cc in displacement;

(2) Class I–B—nonhandheld equipment engines greater than or equal to 66 cc but less than 100 cc in displacement;

(3) Class I—nonhandheld equipment engines greater than or equal to 100 cc but less than 225 cc in displacement;

(4) Class II—nonhandheld equipment engines greater than or equal to 225 cc in displacement;

(5) Class III—handheld equipment engines less than 20 cc in displacement,

(6) Class IV—handheld equipment engines equal or greater than 20 cc but less than 50 cc in displacement, and

(7) Class V—handheld equipment engines equal to or greater than 50 cc in displacement.

(c) The manufacturer's product line will be divided into groupings of engine families as specified by paragraph (d) of this section.

(d) To be classed in the same engine family, engines must be identical in all of the following applicable respects:

(1) The combustion cycle;

(2) The cooling mechanism;

(3) The cylinder configuration (inline, vee, opposed, bore spacings, and so forth);

(4) The number of cylinders;

(5) The engine class;

(6) The location of valves, where applicable, with respect to the cylinder (e.g. side valves or overhead valves);

(7) The number of catalytic converters, location, volume and composition;

(8) The thermal reactor characteristics;

(9) The fuel required (e.g. gasoline, natural gas, LPG); and

(10) The useful life category.

(e) At the manufacturer's option, engines identical in all the respects listed in paragraph (d) of this section may be further divided into different engine families if the Administrator determines that they may be expected to have different emission characteristics. This determination is based upon the consideration of features such as:

(1) The bore and stroke;

(2) The combustion chamber configuration;

(3) The intake and exhaust timing method of actuation (poppet valve, reed valve, rotary valve, and so forth);

(4) The intake and exhaust valve or port sizes, as applicable;

(5) The fuel system;

(6) The exhaust system; and

(7) The method of air aspiration.

(f) Where engines are of a type which cannot be divided into engine families based upon the criteria listed in paragraph (d) of this section, the Administrator will establish families for those engines based upon the features most related to their emission characteristics.

[60 FR 34598, July 3, 1995, as amended at 64 FR 15239, Mar. 30, 1999; 65 FR 24308, Apr. 25, 2000]

§ 90.117 Certification procedure—test engine selection.

(a) For Phase 1 engines, the manufacturer must select, from each engine family, a test engine that the manufacturer determines to be most likely to exceed the emission standard. For Phase 2 engines, the manufacturer must select, from each engine family, a test engine of a configuration that the manufacturer determines to be most likely to exceed the $HC+NO_X$ ($NMHC+NO_X$) Family Emission Limit (FEL), or $HC+NO_X$ ($NMHC+NO_X$) standard if no FEL is applicable.

(b) The test engine must be constructed to be representative of production engines.

[60 FR 34598, July 3, 1995, as amended at 64 FR 15239, Mar. 30, 1999]

§ 90.118 Certification procedure—service accumulation and usage of deterioration factors.

(a)(1) The test engine must be operated with all emission control systems operating properly for a period sufficient to stabilize emissions.

(2) The period sufficient to stabilize emissions may not exceed 12 hours.

(b) No maintenance, other than recommended lubrication and filter changes, may be performed during service accumulation without the Administrator's approval.

(c) Service accumulation is to be performed in a manner using good engineering judgment to ensure that emissions are representative of production engines.

(d) The manufacturer must maintain, and provide to the Administrator if requested, records stating the rationale for selecting a service accumulation period less than 12 hours and records describing the method used to accumulate hours on the test engine(s).

(e) For purposes of establishing whether Phase 2 engines comply with applicable exhaust emission standards or FELs, the test results for each regulated pollutant as measured pursuant to § 90.119 shall be multiplied by the applicable df determined under § 90.104 (g) or (h). The product of the two numbers shall be rounded to the same number of decimal places contained in the applicable standard, and compared against the applicable standard or FEL, as appropriate.

[60 FR 34598, July 3, 1995, as amended at 61 FR 20742, May 8, 1996; 64 FR 15239, Mar. 30, 1999]

§ 90.119 Certification procedure—testing.

(a) *Manufacturer testing.* The manufacturer must test the test engine using the specified test procedures and appropriate test cycle. All test results must be reported to the Administrator.

(1) The test procedure to be used is detailed in Subpart E of this part.

(i) Class I, I–B, and II engines must use Test Cycle A described in Subpart E of this part, except that Class I, I–B, and II engine families in which 100 percent of the engines sold operate only at rated speed may use Test Cycle B described in Subpart E of this part.

(ii) Class I–A, III, IV, and V engines must use Test Cycle C described in subpart E of this part.

(2) Emission test equipment provisions are described in subpart D of this part.

(b) *Administrator testing.* (1) The Administrator may require that any one or more of the test engines be submitted to the Administrator, at such place or places as the Administrator may designate, for the purposes of conducting emission tests. The Administrator may specify that testing will be conducted at the manufacturer's facility, in which case instrumentation and equipment specified by the Administrator must be made available by the manufacturer for test operations. Any testing conducted at a manufacturer's facility must be scheduled by the manufacturer as promptly as possible.

(2)(i) Whenever the Administrator conducts a test on a test engine, the results of that test will, unless subsequently invalidated by the Administrator, comprise the official data for the engine and the manufacturer's data will not be used in determining compliance with emission standards.

(ii) Prior to the performance of such test, the Administrator may adjust or cause to be adjusted any adjustable parameter of the test engine which the Administrator has determined to be subject to adjustment for certification

testing, to any setting within the physically adjustable range of that parameter, to determine whether such engine conforms to applicable emission standards.

(iii) For those engine parameters which the Administrator has not determined to be subject to adjustment for certification testing, the test engine presented to the Administrator for testing will be calibrated within the production tolerances applicable to the manufacturer specification shown on the engine label or in the owner's manual, as specified in the application for certification.

(c) *Use of carryover test data.* In lieu of testing, the manufacturer may submit, with the Administrator's approval, emission test data used to certify substantially similar engine families in previous years. This ''carryover'' test data is only allowable if the data shows the test engine would fully comply with the emission standards for the applicable class.

(d) *Scheduled maintenance during testing.* No scheduled maintenance may be performed during testing of the engine.

(e) *Unscheduled maintenance on test engines.* (1) Manufacturers may not perform any unscheduled engine, emission control system, or fuel system adjustment, repair, removal, disassembly, cleaning, or replacement on a test engine without the advance approval of the Administrator.

(2) The Administrator may approve unscheduled maintenance if:

(i) A preliminary determination has been made that a part failure or system malfunction, or the repair of such failure or malfunction, does not render the engine unrepresentative of engines in use, and does not require direct access to the combustion chamber; and

(ii) A determination has been made that the need for maintenance or repairs is indicated by an overt malfunction such as persistent misfire, engine stall, overheating, fluid leakage, or loss of oil pressure.

(3) Emission measurements may not be used as a means of determining the need for unscheduled maintenance under paragraph (e)(2) of this section.

(4) The Administrator must have the opportunity to verify the extent of any overt indication of part failure (for example, misfire, stall), or an activation of an audible and/or visual signal, prior to the manufacturer performing any maintenance related to such overt indication or signal.

(5) Unless approved by the Administrator prior to use, engine manufacturers may not use any equipment, instruments, or tools to identify malfunctioning, maladjusted, or defective engine components unless the same or equivalent equipment, instruments, or tools are available at dealerships and other service outlets and are used in conjunction with scheduled maintenance on such components.

(6) If the Administrator determines that part failure or system malfunction occurrence and/or repair rendered the engine unrepresentative of production engines, the engine cannot be used as a test engine.

(7) Unless waived by the Administrator, complete emission tests are required before and after any engine maintenance which may reasonably be expected to affect emissions.

(f) *Engine failure.* A manufacturer may not use as a test engine any engine which incurs major mechanical failure necessitating disassembly of the engine. This prohibition does not apply to failures which occur after completion of the service accumulation period.

[60 FR 34598, July 3, 1995, as amended at 65 FR 24308, Apr. 25, 2000]

§ 90.120 Certification procedure—use of special test procedures.

(a) *Use of special test procedures by EPA.* The Administrator may establish special test procedures for any engine that the Administrator determines is not susceptible to satisfactory testing under the specified test procedures set forth in subpart E of this part.

(b)(1) *Use of alternate test procedures by an engine manufacturer.* A manufacturer may elect to use an alternate test procedure provided that it yields results equal to the results from the specified test procedure in subpart E, its use is approved in advance by the Administrator, and the basis for equivalent results with the specified test procedure is fully described in the manufacturer's application.

(2) An engine manufacturer electing to use alternate test procedures is solely responsible for the results obtained. The Administrator may reject data generated under test procedures which do not correlate with data generated under the specified procedures.

(c) Optional procedures approved during Phase 1 can be carried over to Phase 2, following advance approval by the Administrator, to the extent the alternate procedure continues to yield results equal to the results from the specified test procedures in subpart E of this part.

[60 FR 34598, July 3, 1995, as amended at 64 FR 15239, Mar. 30, 1999]

§ 90.121 Certification procedure—recordkeeping.

(a) The engine manufacturer must maintain the following adequately organized records:

(1) Copies of all applications filed with the Administrator;

(2) A copy of all data obtained through the in-use testing program; and

(3) A detailed history of each test engine used for certification including the following:

(i) A description of the test engine's construction, including a general description of the origin and buildup of the engine, steps taken to insure that it is representative of production engines, description of components specially built for the test engine, and the origin and description of all emission-related components;

(ii) A description of the method used for engine service accumulation, including date(s) and the number of hours accumulated;

(iii) A description of all maintenance, including modifications, parts changes, and other servicing performed, and the date(s), and reason(s) for such maintenance;

(iv) A description of all emission tests performed including routine and standard test documentation, as specified in subpart E of this part, date(s), and the purpose of each test;

(v) A description of all tests performed to diagnose engine or emission control performance, giving the date and time of each and the reason(s) for the test; and

(vi) A description of any significant event(s) affecting the engine during the period covered by the history of the test engine but not described by an entry under one of the previous paragraphs of this section.

(b) Routine emission test data, such as those reporting test cell temperature and relative humidity at start and finish of test and raw emission results from each mode or test phase, must be retained for a period of one year after issuance of all certificates of conformity to which they relate. All other information specified in paragraph (a) of this section must be retained for a period of eight years after issuance of all certificates of conformity to which they relate.

(c) Records may be kept in any format and on any media, provided that, at the Administrator's request, organized, written records in English are promptly supplied by the manufacturer.

(d) The manufacturer must supply, at the Administrator's request, copies of any engine maintenance instructions or explanations issued by the manufacturer.

§ 90.122 Amending the application and certificate of conformity.

(a) The engine manufacturer must notify the Administrator when either an engine is to be added to a certificate of conformity, an FEL is to be changed, or changes are to be made to a product line covered by a certificate of conformity. Notification occurs when the manufacturer submits an amendment to the original application prior to either producing such engines or making such changes to a product line.

(b) The amendment must request that the engine manufacturer's existing certificate of conformity be amended and include the following information:

(1) A full description of the engine to be added or the change(s) to be made in production;

(2) The manufacturer's proposed test engine selection(s); and

(3) Engineering evaluations or reasons why the original test engine is or is not still appropriate.

(c) The Administrator may require the engine manufacturer to perform tests on an engine representing the engine to be added or changed.

(d) *Decision by Administrator*. (1) Based on the submitted amendment and data derived from such testing as the Administrator may require or conduct, the Administrator must determine whether the proposed addition or change would still be covered by the certificate of conformity then in effect.

(2) If the Administrator determines that the new or changed engine(s) meets the requirements of this subpart and the Act, the appropriate certificate of conformity will be amended.

(3) If the Administrator determines that the proposed amendment would not be covered by the certificate of conformity, the Administrator must provide a written explanation to the engine manufacturer of his or her decision not to amend the certificate. The manufacturer may request a hearing on a denial.

(4) If the Administrator determines that a revised FEL meets the requirements of this subpart and the Act, the appropriate certificate of conformity will be amended, or a new certificate will be issued to reflect the revised FEL. The certificate of conformity is revised conditional upon compliance with § 90.207(b).

(e)(1) Alternatively, an engine manufacturer may make changes in or additions to production engines concurrently with amending the application as set forth in paragraph (b) of this section, if the manufacturer determines that all affected engines will still meet applicable emission standards. The engine manufacturer must supply supporting documentation, test data, and engineering evaluations as appropriate to support its determination.

(2) If, after a review, the Administrator determines additional testing is required, the engine manufacturer must provide required test data within 30 days or cease production of the affected engines.

(3) If the Administrator determines that the affected engines do not meet applicable requirements, the Administrator will notify the engine manufacturer to cease production of the affected engines.

[60 FR 34598, July 3, 1995, as amended at 64 FR 15239, Mar. 30, 1999]

§ 90.123 Denial, revocation of certificate of conformity.

(a) If, after review of the engine manufacturer's application, request for certification, information obtained from any inspection, and any other information the Administrator may require, the Administrator determines that the test engine does not meet applicable standards and requirements, the Administrator will notify the manufacturer in writing, setting forth the basis for this determination.

(b) Notwithstanding the fact that engines described in the application may comply with all other requirements of this subpart, the Administrator may deny the issuance of or revoke a previously issued certificate of conformity if the Administrator finds any one of the following infractions to be substantial:

(1) The engine manufacturer submits false or incomplete information;

(2) The engine manufacturer denies an EPA enforcement officer or EPA authorized representative the opportunity to conduct authorized inspections;

(3) The engine manufacturer fails to supply requested information or amend its application to include all engines being produced;

(4) The engine manufacturer renders inaccurate any test data which it submits or otherwise circumvents the intent of the Act or this part; or

(5) The engine manufacturer denies an EPA enforcement officer or EPA authorized representative reasonable assistance (as defined in § 90.506).

(c) If a manufacturer knowingly commits an infraction specified in paragraph (b)(1) or (b)(4) of this section or knowingly commits any fraudulent act which results in the issuance of a certificate of conformity, the Administrator may deem such certificate void ab initio.

(d) When the Administrator denies or revokes a certificate of conformity, the engine manufacturer will be provided a

written determination. The manufacturer may request a hearing on the Administrator's decision.

(e) Any revocation of a certificate of conformity extends no further than to forbid the introduction into commerce of those engines previously covered by the certification which are still in the possession of the engine manufacturer, except in cases of such fraud or other misconduct that makes the certification void ab initio.

§ 90.124 Request for hearing.

(a) An engine manufacturer may request a hearing on the Administrator's denial or revocation of a certificate of conformity.

(b) The engine manufacturer's request must be filed within 30 days of the Administrator's decision, be in writing, and set forth the manufacturer's objections to the Administrator's decision and data to support the objections.

(c) If, after review of the request and supporting data, the Administrator finds that the request raises a substantial and factual issue, the Administrator will provide the engine manufacturer a hearing.

§ 90.125 Hearing procedures.

The hearing procedures set forth in §§ 90.513, 90.514, and 90.515 apply to this subpart.

§ 90.126 Right of entry and access.

Any engine manufacturer that has applied for certification of a new engine or engine family subject to certification testing under this subpart must admit or cause to be admitted to any applicable facilities during operating hours any EPA enforcement officer or EPA authorized representative as provided in § 90.506.

Subpart C—Certification Averaging, Banking, and Trading Provisions

SOURCE: 64 FR 15239, Mar. 30, 1999, unless otherwise noted.

§ 90.201 Applicability.

The requirements of this subpart C are applicable to all Phase 2 spark-ignition engines subject to the provisions of subpart A of this part except as provided in § 90.103(a). These provisions are not applicable to any Phase 1 engines. Participation in the averaging, banking and trading program is voluntary, but if a manufacturer elects to participate, it must do so in compliance with the regulations set forth in this subpart. The provisions of this subpart are applicable for $HC+NO_X$ ($NMHC+NO_X$) emissions but not for CO emissions.

§ 90.202 Definitions.

The definitions in subpart A of this part apply to this subpart. The following definitions also apply to this subpart:

Averaging means the exchange of emission credits between engine families within a given manufacturer's product line.

Banking means the retention of emission credits by the manufacturer generating the emission credits or obtaining such credits through trading, for use in future model year averaging or trading as permitted in this part.

Emission credits represent the amount of emission reduction or exceedance, by an engine family, below or above the applicable $HC+NO_X$ ($NMHC+NO_X$) emission standard, respectively. FELs below the standard create ''positive credits,'' while FELs above the standard create ''negative credits.'' In addition, ''projected credits'' refer to emission credits based on the projected applicable production volume of the engine family. ''Reserved credits'' are emission credits generated within a model year waiting to be reported to EPA at the end of the model year. ''Actual credits'' refer to emission credits based on actual applicable production volume as contained in the end-of-year reports submitted to EPA. Some or all of these credits may be revoked if EPA review of the end-of-year reports or any subsequent audit action(s) reveals problems or errors of any nature with credit computations.

Trading means the exchange of emission credits between manufacturers.

§ 90.203 General provisions.

(a) The certification averaging, banking, and trading provisions for $HC+NO_X$

and NMHC+NO_X emissions from eligible engines are described in this subpart.

(b) An engine family may use the averaging, banking and trading provisions for HC+NO_X and NMHC+NO_X emissions if it is subject to regulation under this part with certain exceptions specified in paragraph (c) of this section. HC+NO_X and NMHC+NO_X credits shall be interchangeable subject to the limitations on credit generation, credit usage, and other provisions described in this subpart.

(c) A manufacturer shall not include in its calculation of credit generation and may exclude from its calculation of credit usage, any new engines:

(1) Which are intended to be exported, unless the manufacturer has reason or should have reason to believe that such engines have been or will be imported in a piece of equipment; or

(2) Which are subject to state engine emission standards pursuant to a waiver granted by EPA under section 209(e) of the Act, unless the manufacturer demonstrates to the satisfaction of the Administrator that inclusion of these engines in averaging, banking and trading is appropriate.

(d) For an engine family using credits, a manufacturer may, at its option, include its entire production of that engine family in its calculation of credit usage for a given model year.

(e)(1) A manufacturer may certify engine families at Family Emission Limits (FELs) above or below the applicable emission standard subject to the limitation in paragraph (f) of this section, provided the summation of the manufacturer's projected balance of credits from all credit transactions for all engine classes in a given model year is greater than or equal to zero, as determined under § 90.207 or § 90.216, as applicable.

(2) A manufacturer of an engine family with an FEL exceeding the applicable emission standard must obtain positive emission credits sufficient to address the associated credit shortfall via averaging, banking, or trading.

(3) A nonhandheld engine family with an FEL below the applicable emission standard may generate positive emission credits for averaging, banking, or trading, or a combination thereof. A handheld engine family with an FEL below the applicable emission standard may generate positive emission credits for averaging or trading. A handheld engine family meeting the requirements of § 90.205(a)(4) or (5), whichever is applicable, may generate positive emission credits for banking.

(4) In the case of a Selective Enforcement Audit (SEA) failure, credits may be used to cover subsequent production of engines for the family in question if the manufacturer elects to recertify to a higher FEL. Credits may not be used to remedy a nonconformity determined by an SEA, except that the Administrator may permit the use of credits to address a nonconformity determined by an SEA where the use of such credits is one component of a multi-part remedy for the previously produced engines and the remedy, including the use of credits and the quantity of credits being used, is such that the Administrator is satisfied that the manufacturer has strong and lasting incentive to accurately verify its new engine emission levels and will set or reset its FELs for current and future model years so that production line compliance is assured.

(5) In the case of a production line testing (PLT) failure pursuant to subpart H of this part, a manufacturer may revise the FEL based upon production line testing results obtained under subpart H of this part and upon Administrator approval pursuant to § 90.122(d). The manufacturer may use credits to cover both past production and subsequent production of the engines as needed as allowed under § 90.207(c) or § 90.216(c), as applicable.

(f) No Phase 2 engine family may have a HC + NO_X FEL that is greater than 32.2 g/kW-hr for Class I engines, 94 g/kW-hr for Class I–A engines, 50 g/kW-hr for Class I–B engines, 26.8 g/kW-hr for Class II engines, 336 g/kW-hr for Class III engines, 275 g/kW-hr for Class IV engines, or 186 g/kW-hr for Class V engines.

(g)(1) Credits generated in a given model year by an engine family subject to the Phase 2 emission requirements may only be used in averaging, banking or trading, as appropriate, for any other engine family for which the Phase 2 requirements are applicable.

Credits generated in one model year may not be used for prior model years, except as allowed under § 90.207(c) or § 90.216(c), as applicable.

(2) For the 2005 model year and for each subsequent model year, manufacturers of Class II engines must provide a demonstration that the production weighted average FEL for $HC+NO_X$ (including $NMHC+NO_X$ FELs), for all of the manufacturer's Class II engines, will not exceed 13.6 g/kW-hr for the 2005 model year, 13.1 g/kW-hr for the 2006 model year and 12.6 g/kW-hr for the 2007 and each subsequent Phase 2 model year. Such demonstration shall be subject to the review and approval of the Administrator, shall be provided at the time of the first Class II certification of that model year and shall be based on projected eligible production for that model year.

(h) Manufacturers must demonstrate compliance under the averaging, banking, and trading provisions for a particular model year by 270 days after the end of the model year. Except as provided in § 90.207(c) or § 90.216(c), as applicable, an engine family generating negative credits for which the manufacturer does not obtain or generate an adequate number of positive credits by that date from the same or previous model year engines will violate the conditions of the certificate of conformity. The certificate of conformity may be voided *ab initio* pursuant to § 90.123 for this engine family.

[64 FR 15239, Mar. 30, 1999, as amended at 65 FR 24308, Apr. 25, 2000]

§ 90.204 Averaging.

(a) Negative credits from engine families with FELs above the applicable emission standard must be offset by positive credits from engine families having FELs below the applicable emission standard, as allowed under the provisions of this subpart. Averaging of credits in this manner is used to determine compliance under § 90.207(b).

(b) Cross-class averaging of credits is allowed across all classes of nonroad spark-ignition engines at or below 19 kW.

(c) Credits used in averaging for a given model year may be obtained from credits generated in the same model year by another engine family, credits banked in previous model years, or credits of the same or previous model year obtained through trading subject to the provisions of § 90.205(a). The restrictions of this paragraph notwithstanding, credits from a given model year may be used to address credit needs of previous model year engines as allowed under § 90.207(c).

(d) The use of credits generated under the early banking provisions of § 90.205(b) is subject to regulations under this subpart.

[64 FR 15239, Mar. 30, 1999, as amended at 65 FR 24308, Apr. 25, 2000]

§ 90.205 Banking.

(a)(1) Beginning August 1, 2007, a manufacturer of a Class I engine family with an FEL below the applicable emission standard for a given model year may bank credits in that model year for use in averaging and trading. For new Class I engine families initially produced during the period starting August 1, 2003 through July 31, 2007, a manufacturer of a Class I engine family with an FEL below the applicable emission standard for a given model year may bank credits in that model year for use in averaging and trading.

(2) Beginning with the 2000 model year, a manufacturer of a Class I–A or Class I–B engine family with an FEL below the applicable emission standard for a given model year may bank credits in that model year for use in averaging and trading.

(3) Beginning with the 2001 model year, a manufacturer of a Class II engine family with an FEL below the applicable emission standard for a given model year may bank credits in that model year for use in averaging and trading.

(4) For the 2002 through 2004 model years, a manufacturer of a Class III or Class IV engine family may bank credits for use in future model year averaging and trading from only those Class III or Class IV engine families with an FEL at or below 72 g/kW-hr. Beginning with the 2005 model year, a manufacturer of a Class III or Class IV engine family with an FEL below the applicable emission standard may generate credits for use in future model year averaging and trading.

(5) For the 2004 through 2006 model years, a manufacturer of a Class V engine family may bank credits for use in future model year averaging and trading from only those Class V engine families with an FEL at or below 87 g/kW-hr. Beginning with the 2007 model year, a manufacturer of a Class V engine family with an FEL below the applicable emission standard may generate credits for use in future model year averaging and trading.

(6) Negative credits may be banked only according to the requirements under § 90.207(c).

(b)(1) For Class I engine families initially produced during the period beginning with the 1999 model year and prior to August 1, 2003, a manufacturer may bank early credits for engines with HC + NO_X FELs below 16.1 g/kW-hr. All early credits for such Class I engines shall be calculated against a HC + NO_X level of 20.5 g/kW-hr and may continue to be calculated against the 20.5 g/kW-hr level until August 1, 2007.

(2) Beginning with the 1999 model year and prior to the applicable date listed in paragraph (a) of this section for Class II engines, a manufacturer may bank early credits for all Class II engines with HC+NO_X FELs below 12.1 g/kW-hr. All early credits for Class II engines shall be calculated against a HC+NO_X level of 18.0 g/kW-hr.

(3) Beginning with the 2000 model year and prior to the applicable date listed in paragraph (a) of this section for Class III engines, a manufacturer may bank early credits for all Class III engines with HC+NO_X FELs below 72 g/kW-hr. All early credits for Class III engines shall be calculated against a HC+NO_X level of 238 g/kW-hr.

(4) Beginning with the 2000 model year and prior to the applicable date listed in paragraph (a) of this section for Class IV engines, a manufacturer may bank early credits for all Class IV engines with HC+NO_X FELs below 72 g/kW-hr. All early credits for Class IV engines shall be calculated against a HC+NO_X level of 196 g/kW-hr.

(5) Beginning with the 2000 model year and prior to the applicable date listed in paragraph (a) of this section for Class V engines, a manufacturer may bank early credits for all Class V engines with HC+NO_X FELs below 87 g/kW-hr. All early credits for Class V engines shall be calculated against a HC+NO_X level of 143 g/kW-hr.

(6) Engines certified under the early banking provisions of this paragraph are subject to all of the requirements of this part applicable to Phase 2 engines.

(c) A manufacturer may bank actual credits only after the end of the model year and after EPA has reviewed the manufacturer's end-of-year reports. During the model year and before submittal of the end-of-year report, credits originally designated in the certification process for banking will be considered reserved and may be redesignated for trading or averaging in the end-of-year report and final report.

(d) Credits declared for banking from the previous model year that have not been reviewed by EPA may be used in averaging or trading transactions. However, such credits may be revoked at a later time following EPA review of the end-of-year report or any subsequent audit actions.

[64 FR 15239, Mar. 30, 1999, as amended at 65 FR 24308, Apr. 25, 2000]

§ 90.206 Trading.

(a) An engine manufacturer may exchange emission credits with other engine manufacturers in trading.

(b) Credits for trading can be obtained from credits banked in previous model years or credits generated during the model year of the trading transaction.

(c) Traded credits can be used for averaging, banking, or further trading transactions, subject to § 90.205(a).

(d) Traded credits are subject to the limitations on use for past model years, as set forth in § 90.204(c).

(e) In the event of a negative credit balance resulting from a transaction, both the buyer and the seller are liable, except in cases involving fraud. Certificates of all engine families participating in a negative trade may be voided *ab initio* pursuant to § 90.123.

[64 FR 15239, Mar. 30, 1999, as amended at 65 FR 24309, Apr. 25, 2000]

§ 90.207 Credit calculation and manufacturer compliance with emission standards.

(a) For each engine family, $HC+NO_X$ [$NMHC+NO_X$] certification emission credits (positive or negative) are to be calculated according to the following equation and rounded to the nearest gram. Consistent units are to be used throughout the equation.

Credits = Production x (Standard—FEL) x Power x Useful life x Load Factor

Where:

Production = eligible production as defined in this part. Annual production projections are used to project credit availability for initial certification. Eligible production volume is used in determining actual credits for end-of-year compliance determination.

Standard = the current and applicable Small SI engine $HC+NO_X$ ($NMHC+NO_X$) emission standard in grams per kilowatt hour as determined in § 90.103 or, for early credits, the applicable emission level as specified in § 90.205(b).

FEL = the family emission limit for the engine family in grams per kilowatt hour.

Power = the maximum modal power of the certification test engine, in kilowatts, as calculated from the applicable federal test procedure as described in this part.

Useful Life = the useful life in hours corresponding to the useful life category for which the engine family was certified.

Load Factor = 47 percent (i.e., 0.47) for Test Cycle A and Test Cycle B, and 85 percent (i.e., 0.85) for Test Cycle C. For approved alternate test procedures, the load factor must be calculated according to the following formula:

$$\sum_{i=1}^{n}\left(\%\text{MTT mode}_i\right)\times\left(\%\text{MTS mode}_i\right)\times\left(\text{WF mode}_i\right)$$

Where:

$\%MTT\ mode_i$ = percent of the maximum FTP torque for mode i.

$\%MTS\ mode_i$ = percent of the maximum FTP engine rotational speed for mode i.

$WF\ mode_i$ = the weighting factor for mode i.

(b) Manufacturer compliance with the emission standards is determined on a corporate average basis at the end of each model year. A manufacturer is in compliance when the sum of positive and negative emission credits it holds is greater than or equal to zero, except that the sum of positive and negative credits may be less than zero as allowed under paragraph (c) of this section.

(c) If, as a result of production line testing as required in subpart H of this part, an engine family is determined to be in noncompliance pursuant to § 90.710, the manufacturer may raise its FEL for past and future production as necessary. Further, a manufacturer may carry a negative credit balance (known also as a credit deficit) for the subject class and model year and for the next three model years. The credit deficit may be no larger than that created by the nonconforming family. If the credit deficit still exists after the model year following the model year in which the nonconformity occurred, the manufacturer must obtain and apply credits to offset the remaining credit deficit at a rate of 1.2 grams for each gram of deficit within the next two model years. The provisions of this paragraph are subject to the limitations in paragraph (d) of this section.

(d) Regulations elsewhere in this part notwithstanding, if an engine manufacturer experiences two or more production line testing failures pursuant to the regulations in subpart H of this part in a given model year, the manufacturer may raise the FEL of previously produced engines only to the extent that such engines represent no more than 10 percent of the manufacturer's total eligible production for that model year, as determined on the date when the FEL is adjusted. For any additional engine families determined to be in noncompliance, the manufacturer must conduct offsetting projects approved in advance by the Administrator.

(e) If, as a result of production line testing under this subpart, a manufacturer desires to lower its FEL it may do so subject to § 90.708(c).

(f) Except as allowed at paragraph (c) of this section, when a manufacturer is not in compliance with the applicable emission standard by the date 270 days after the end of the model year, considering all credit calculations and transactions completed by then, the manufacturer will be in violation of the regulations in this part and EPA may, pursuant to § 90.123, void *ab initio* the certificates of engine families for which the manufacturer has not obtained sufficient positive emission credits.

[64 FR 15239, Mar. 30, 1999; 64 FR 16526, Apr. 5, 1999, as amended at 65 FR 24309, Apr. 25, 2000]

§ 90.208 Certification.

(a) In the application for certification a manufacturer must:

(1) Submit a statement that the engines for which certification is requested will not, to the best of the manufacturer's belief, cause the manufacturer to be in noncompliance under § 90.207(b) when all credits are calculated for the manufacturer's engine families.

(2) Declare an FEL for each engine family for $HC+NO_X$ ($NMHC+NO_X$). The FEL must have the same number of significant digits as the emission standard.

(3) Indicate the projected number of credits generated/needed for this family; the projected applicable eligible annual production volume, and the values required to calculate credits as given in § 90.207.

(4) Submit calculations in accordance with § 90.207 of projected emission credits (positive or negative) based on annual production projections for each family.

(5) (i) If the engine family is projected to have negative emission credits, state specifically the source (manufacturer/engine family or reserved) of the credits necessary to offset the credit deficit according to projected annual production.

(ii) If the engine family is projected to generate credits, state specifically (manufacturer/engine family or reserved) where the projected annual credits will be applied.

(iii) The manufacturer may supply the information required by this section in the form of a spreadsheet detailing the manufacturer's annual production plans and the credits generated or consumed by each engine family.

(b) All certificates issued are conditional upon manufacturer compliance with the provisions of this subpart both during and after the model year of production.

(c) Failure to comply with all provisions of this subpart will be considered to be a failure to satisfy the conditions upon which the certificate was issued, and the certificate may be determined to be void *ab initio* pursuant to § 90.123.

(d) The manufacturer bears the burden of establishing to the satisfaction of the Administrator that the conditions upon which the certificate was issued were satisfied or waived.

(e) Projected credits based on information supplied in the certification application may be used to obtain a certificate of conformity. However, any such credits may be revoked based on review of end-of-year reports, follow-up audits, and any other verification steps considered appropriate by the Administrator.

§ 90.209 Maintenance of records.

(a) The manufacturer must establish, maintain, and retain the following adequately organized and indexed records for each engine family:

(1) EPA engine family identification code;

(2) Family Emission Limit (FEL) or FELs where FEL changes have been implemented during the model year;

(3) Maximum modal power for the certification test engine;

(4) Projected production volume for the model year; and

(5) Records appropriate to establish the quantities of engines that constitute eligible production as defined in § 90.3 for each FEL.

(b) Any manufacturer producing an engine family participating in trading reserved credits must maintain the following records on an annual basis for each such engine family:

(1) The engine family;

(2) The actual applicable production volume;

(3) The values required to calculate credits as given in § 90.207;

(4) The resulting type and number of credits generated/required;

(5) How and where credit surpluses are dispersed; and

(6) How and through what means credit deficits are met.

(c) The manufacturer must retain all records required to be maintained under this section for a period of eight years from the due date for the end-of-model year report. Records may be retained as hard copy or reduced to microfilm, ADP diskettes, and so forth, depending on the manufacturer's record retention procedure; provided, that in every case all information contained in the hard copy is retained.

(d) Nothing in this section limits the Administrator's discretion in requiring the manufacturer to retain additional records, or submit information not specifically required by this section, if otherwise permitted by law.

(e) Pursuant to a request made by the Administrator, the manufacturer must submit to the Administrator the information that the manufacturer is required to retain.

(f) EPA may, pursuant to § 90.123, void *ab initio* a certificate of conformity for an engine family for which the manufacturer fails to retain the records required in this section or to provide such information to the Administrator upon request.

§ 90.210 End-of-year and final reports.

(a) End-of-year and final reports must indicate the engine family, the engine class, the actual production volume, the values required to calculate credits as given in § 90.207, and the number of credits generated/required. Manufacturers must also submit how and where credit surpluses were dispersed (or are to be banked) and/or how and through what means credit deficits were met. Copies of contracts related to credit trading must be included or supplied by the broker, if applicable. The report must include a calculation of credit balances to show that the credit summation for all engines is equal to or greater than zero (or less than zero in cases of negative credit balances as permitted in § 90.207(c)). For model year 2005 and later, the report must include a calculation of the production weighted average $HC+NO_X$ (including $NMHC+NO_X$) FEL for Class II engine families to show compliance with the provisions of § 90.203(g)(2).

(b) The calculation of eligible production for end-of-year and final reports must be based on engines produced for the United States market, excluding engines which are subject to state emission standards pursuant to a waiver granted by EPA under section 209(e) of the Act. Upon advance written request, the Administrator will consider other methods to track engines for credit calculation purposes that provide high levels of confidence that eligible production or sales are accurately counted.

(c)(1)End-of-year reports must be submitted within 90 days of the end of the model year to: Manager, Engine Compliance Programs Group (6403–J), U.S. Environmental Protection Agency, Washington, DC 20460.

(2) Unless otherwise approved by the Administrator, final reports must be submitted within 270 days of the end of the model year to: Manager, Engine Compliance Programs Group (6403–J), U.S. Environmental Protection Agency, Washington, DC 20460.

(d) Failure by a manufacturer to submit any end-of-year or final reports in the specified time for any engines subject to regulation under this part is a violation of § 90.1003(a)(2) and section 213(d) of the Clean Air Act for each engine.

(e) A manufacturer generating credits for banking only who fails to submit end-of-year reports in the applicable specified time period (90 days after the end of the model year) may not use the credits until such reports are received and reviewed by EPA. Use of projected credits pending EPA review is not permitted in these circumstances.

(f) Errors discovered by EPA or the manufacturer in the end-of-year report, including errors in credit calculation, may be corrected in the final report.

(g) If EPA or the manufacturer determines that a reporting error occurred on an end-of-year or final report previously submitted to EPA under this section, the manufacturer's credits and credit calculations must be recalculated. Erroneous positive credits will be void except as provided in paragraph

(h) of this section. Erroneous negative credit balances may be adjusted by EPA.

(h) If EPA review determines a reporting error in the manufacturer's favor (that is, resulting in an increased credit balance) or if the manufacturer discovers such an error within 270 days of the end of the model year, EPA shall restore the credits for use by the manufacturer.

§ 90.211 Request for hearing.

An engine manufacturer may request a hearing on the Administrator's voiding of the certificate under §§ 90.203(h), 90.206(e), 90.207(f), 90.208(c), or 90.209(f), pursuant to § 90.124. The procedures of § 90.125 shall apply to any such hearing.

§ 90.212 Optional transition year averaging, banking, and trading program for Phase 2 handheld engines.

(a) In lieu of the averaging, banking, and trading program described in §§ 90.204 through 90.211, a handheld engine manufacturer may, through model year 2010, participate in an optional transition year averaging, banking and trading program as described in §§ 90.213 through 90.220.

(b) Under this optional transition year program, if an engine family has an FEL below the applicable standard for that year, it can generate emission credits as calculated in § 90.216. These credits will be determined by subtracting the engine family's FEL from the standard and multiplying by the appropriate adjustment factor selected from Tables 1 through 3 in § 90.216. These credits will be designated as ''Optional Transition Year'' credits. These credits, as adjusted by these factors, may be used in subsequent model years through model year 2007 to demonstrate manufacturer compliance with the applicable standard. Beginning in model year 2008 and continuing through model year 2010, these optional transition credits can be used to demonstrate compliance if, prior to the use of any credits, the manufacturer's average emission level as calculated using the FELs set by the manufacturer is equal to or lower than the manufacturer's average emission level using the manufacturer's actual production, but substituting values of 72 g/kW-hr for Class III and IV engines, and 87 g/kW-hr for Class V engines. Manufacturer will choose to participate in this optional transition year program each year and for each engine family. Manufacturers will notify EPA of their program choice at the time they request certification. Once a family has been designated as generating credits under either the optional program or the program described in §§ 90.204 through 90.211, the manufacturer may not change that program selection for any of the engines of that engine family produced under that model year certification approval.

[65 FR 24309, Apr. 25, 2000]

§ 90.213 Averaging under the optional program.

(a) Negative credits from engine families with FELs above the applicable emission standard must be offset by positive credits from engine families having FELs below the applicable emission standard, as allowed under the provisions of this subpart. Averaging of credits in this manner is used to determine compliance under § 90.216(b).

(b) Cross-class averaging of credits is allowed across all classes of nonroad spark-ignition handheld engines at or below 19 kW participating in the optional transition year program.

(c) Credits used in averaging for a given model year may be obtained from credits generated in the same model year by another engine family, credits banked in previous model years, or credits of the same or previous model year obtained through trading. The restrictions of this paragraph (c) notwithstanding, credits from a given model year may be used to address credit needs of previous model year engines as allowed under § 90.216(c).

(d) The use of credits generated under the early banking provisions of § 90.214(b) is subject to regulations under this subpart.

[65 FR 24309, Apr. 25, 2000]

§ 90.214 Banking under the optional program.

(a)(1)–(3) [Reserved]

(4) For the 2002 through 2004 model years, a manufacturer of a Class III or

Class IV engine family may bank credits for use in future model year averaging and trading from those Class III or Class IV engine families with an FEL at or below the applicable standard.

(5) For the 2004 through 2006 model years, a manufacturer of a Class V engine family may bank credits for use in future model year averaging and trading from those Class V engine families with an FEL at or below the applicable standard.

(6) Negative credits may be banked only according to the requirements under § 90.216(c).

(b)(1) [Reserved]

(2) [Reserved]

(3) Beginning with the 2000 model year and prior to the applicable date listed in paragraph (a) of this section for Class III engines, a manufacturer may bank early credits for all Class III engines with $HC+NO_X$ FELs below the applicable standard. All early credits for Class III engines shall be calculated against a $HC+NO_X$ level of 238 g/kW-hr.

(4) Beginning with the 2000 model year and prior to the applicable date listed in paragraph (a) of this section for Class IV engines, a manufacturer may bank early credits for all Class IV engines with $HC+NO_X$ FELs below the applicable standard. All early credits for Class IV engines shall be calculated against a $HC+NO_X$ level of 196 g/kW-hr.

(5) Beginning with the 2000 model year and prior to the applicable date listed in paragraph (a) of this section for Class V engines, a manufacturer may bank early credits for all Class V engines with $HC+NO_X$ FELs below the applicable standard. All early credits for Class V engines shall be calculated against a $HC+NO_X$ level of 143 g/kW-hr.

(6) Engines certified under the early banking provisions of this paragraph are subject to all of the requirements of this part applicable to Phase 2 engines.

(c) A manufacturer may bank actual credits only after the end of the model year and after EPA has reviewed the manufacturer's end-of-year reports. During the model year and before submittal of the end-of-year report, credits originally designated in the certification process for banking will be considered reserved and may be redesignated for trading or averaging in the end-of-year report and final report.

(d) Credits declared for banking from the previous model year that have not been reviewed by EPA may be used in averaging or trading transactions. However, such credits may be revoked at a later time following EPA review of the end-of-year report or any subsequent audit actions.

[65 FR 24309, Apr. 25, 2000]

§ 90.215 Trading under the optional program.

(a) An engine manufacturer may exchange emission credits with other engine manufacturers in trading.

(b) Credits for trading can be obtained from credits banked in previous model years or credits generated during the model year of the trading transaction.

(c) Traded credits can be used for averaging, banking, or further trading transactions.

(d) Traded credits are subject to the limitations on use for past model years, as set forth in § 90.213(c).

(e) In the event of a negative credit balance resulting from a transaction, both the buyer and the seller are liable, except in cases involving fraud. Certificates of all engine families participating in a negative trade may be voided ab initio pursuant to § 90.123.

[65 FR 24310, Apr. 25, 2000]

§ 90.216 Credit calculation and manufacturer compliance with emission standards under the optional program.

(a)(1) For each engine family, $HC+NO_X$ [$NMHC+NO_X$] certification emission credits (positive or negative) are to be calculated according to the following equation and rounded to the nearest gram. Consistent units are to be used throughout the following equation:

Credits = Production × (Standard − FEL) × Power × Useful life × Load Factor × Adjustment Factor

Where:

Production = eligible production as defined in this part. Annual production projections are used to project

credit availability for initial certification. Eligible production volume is used in determining actual credits for end-of-year compliance determination.

Standard = the current and applicable Small SI engine $HC+NO_X$ ($NMHC+NO_X$) emission standard in grams per kilowatt hour as determined in §90.103 or, for early credits, the applicable emission level as specified in §90.214(b).

FEL = the family emission limit for the engine family in grams per kilowatt hour.

Power = the maximum modal power of the certification test engine, in kilowatts, as calculated from the applicable federal test procedure as described in this part.

Useful Life = the useful life in hours corresponding to the useful life category for which the engine family was certified.

Load Factor = 85 percent (i.e., 0.85) for Test Cycle C. For approved alternate test procedures, the load factor must be calculated according to the formula in paragraph (a)(2) of this section:

Adjustment Factor = 1.0, except for purposes of calculating credits for banking under the optional transition year program, in which case the adjustment factor is listed in Table 1, Table 2, or Table 3 of paragraph (a)(3) of this section, whichever is applicable, based on the model year of the engine and its certified FEL.

(2) Use the following formula to calculate the load factor in paragraph (a)(1) of this section:

$$\sum_{i=1}^{n}\left(\%\text{MTT mode}_i\right)\times\left(\%\text{MTS mode}_i\right)\times\left(\text{WF mode}_i\right)$$

Where:

%MTT $mode_i$ = percent of the maximum FTP torque for mode i.

%MTS $mode_i$ = percent of the maximum FTP engine rotational speed for mode i.

WF $mode_i$ = the weighting factor for mode i.

(3) Tables 1, 2, and 3 follow:

TABLE 1—ADJUSTMENT FACTORS FOR CLASS III ENGINES

Model year 2002 or earlier engine families with FELs:	Model year 2003 engine families with FELs:	Model year 2004 engine families with FELs:	Adjustment factor
>113 g/kW-hr	>87 g/kW-hr		0.25
>87–113 g/kW-hr	>72–87 g/kW-hr	>72–87 g/kW-hr	0.50
>72–87 g/kW-hr	>50–72 g/kW-hr	≤72 g/kW-hr	1.00
≤72 g/kW-hr	≤50 g/kW-hr		1.25

TABLE 2—ADJUSTMENT FACTORS FOR CLASS IV ENGINES

Model year 2002 or earlier engine families with FELs:	Model year 2003 engine families with FELs:	Model year 2004 engine families with FELs:	Adjustment factor
>99 g/kW-hr	>87 g/kW-hr		0.25
>87–99 g/kW-hr	>72–87 g/kW-hr	>72–87 g/kW-hr	0.50
>72–87 g/kW-hr	>50–72 g/kW-hr	≤72 g/kW-hr	1.00
≤72 g/kW-hr	≤50 g/kW-hr		1.25

TABLE 3—ADJUSTMENT FACTORS FOR CLASS V ENGINES

Model year 2004 or earlier engine families with FELs:	Model year 2005 engine families with FELs:	Model year 2006 engine families with FELs:	Adjustment factor
>96 g/kW-hr			0.25
>87–96 g/kW-hr	>87 g/kW-hr	>72–87 g/kW-hr	0.50
>72–87 g/kW-hr	>72–87 g/kW-hr	≤72 g/kW-hr	1.00

TABLE 3—ADJUSTMENT FACTORS FOR CLASS V ENGINES—Continued

Model year 2004 or earlier engine families with FELs:	Model year 2005 engine families with FELs:	Model year 2006 engine families with FELs:	Adjustment factor
≤72 g/kW-hr	≤72 g/kW-hr		1.25

(b) Manufacturer compliance with the emission standards is determined on a corporate average basis at the end of each model year. A manufacturer is in compliance when the sum of positive and negative emission credits it holds is greater than or equal to zero, except that the sum of positive and negative credits may be less than zero as allowed under paragraph (c) of this section.

(c) If, as a result of production line testing as required in subpart H of this part, an engine family is determined to be in noncompliance pursuant to § 90.710, the manufacturer may raise its FEL for past and future production as necessary. Further, a manufacturer may carry a negative credit balance (known also as a credit deficit) for the subject class and model year and for the next three model years. The credit deficit may be no larger than that created by the nonconforming family. If the credit deficit still exists after the model year following the model year in which the nonconformity occurred, the manufacturer must obtain and apply credits to offset the remaining credit deficit at a rate of 1.2 grams for each gram of deficit within the next two model years. The provisions of this paragraph (c) are subject to the limitations in paragraph (d) of this section.

(d) Regulations elsewhere in this part notwithstanding, if an engine manufacturer experiences two or more production line testing failures pursuant to the regulations in subpart H of this part in a given model year, the manufacturer may raise the FEL of previously produced engines only to the extent that such engines represent no more than 10 percent of the manufacturer's total eligible production for that model year, as determined on the date when the FEL is adjusted. For any additional engine families determined to be in noncompliance, the manufacturer must conduct offsetting projects approved in advance by the Administrator.

(e) If, as a result of production line testing under this subpart, a manufacturer desires to lower its FEL it may do so subject to § 90.708(c).

(f) Except as allowed at paragraph (c) of this section, when a manufacturer is not in compliance with the applicable emission standard by the date 270 days after the end of the model year, considering all credit calculations and transactions completed by then, the manufacturer will be in violation of these regulations and EPA may, pursuant to § 90.123, void ab initio the certificates of engine families for which the manufacturer has not obtained sufficient positive emission credits.

[65 FR 24310, Apr. 25, 2000]

§ 90.217 Certification under the optional program.

(a) In the application for certification a manufacturer must:

(1) Submit a statement that the engines for which certification is requested will not, to the best of the manufacturer's belief, cause the manufacturer to be in noncompliance under § 90.216(b) when all credits are calculated for the manufacturer's engine families.

(2) Declare an FEL for each engine family for $HC+NO_X$ ($NMHC+NO_X$). The FEL must have the same number of significant digits as the emission standard.

(3) Indicate the projected number of credits generated/needed for this family; the projected applicable eligible annual production volume, and the values required to calculate credits as given in § 90.216.

(4) Submit calculations in accordance with § 90.216 of projected emission credits (positive or negative) based on annual production projections for each family.

(5)(i) If the engine family is projected to have negative emission credits, state specifically the source (manufacturer/engine family or reserved) of the credits necessary to offset the credit

deficit according to projected annual production.

(ii) If the engine family is projected to generate credits, state specifically (manufacturer/engine family or reserved) where the projected annual credits will be applied.

(iii) The manufacturer may supply the information required by this section in the form of a spreadsheet detailing the manufacturer's annual production plans and the credits generated or consumed by each engine family.

(b) All certificates issued are conditional upon manufacturer compliance with the provisions of this subpart both during and after the model year of production.

(c) Failure to comply with all provisions of this subpart will be considered to be a failure to satisfy the conditions upon which the certificate was issued, and the certificate may be determined to be void ab initio pursuant to § 90.123.

(d) The manufacturer bears the burden of establishing to the satisfaction of the Administrator that the conditions upon which the certificate was issued were satisfied or waived.

(e) Projected credits based on information supplied in the certification application may be used to obtain a certificate of conformity. However, any such credits may be revoked based on review of end-of-year reports, follow-up audits, and any other verification steps considered appropriate by the Administrator.

[65 FR 24311, Apr. 25, 2000]

§ 90.218 Maintenance of records under the optional program.

(a) The manufacturer must establish, maintain, and retain the following adequately organized and indexed records for each engine family:

(1) EPA engine family identification code;

(2) Family Emission Limit (FEL) or FELs where FEL changes have been implemented during the model year;

(3) Maximum modal power for the certification test engine;

(4) Projected production volume for the model year; and

(5) Records appropriate to establish the quantities of engines that constitute eligible production as defined in § 90.3 for each FEL.

(b) Any manufacturer producing an engine family participating in trading reserved credits must maintain the following records on an annual basis for each such engine family:

(1) The engine family;

(2) The actual applicable production volume;

(3) The values required to calculate credits as given in § 90.216;

(4) The resulting type and number of credits generated/required;

(5) How and where credit surpluses are dispersed; and

(6) How and through what means credit deficits are met.

(c) The manufacturer must retain all records required to be maintained under this section for a period of eight years from the due date for the end-of-model year report. Records may be retained as hard copy or reduced to microfilm, ADP diskettes, and so forth, depending on the manufacturer's record retention procedure; provided, that in every case all information contained in the hard copy is retained.

(d) Nothing in this section limits the Administrator's discretion in requiring the manufacturer to retain additional records, or submit information not specifically required by this section, if otherwise permitted by law.

(e) Pursuant to a request made by the Administrator, the manufacturer must submit to the Administrator the information that the manufacturer is required to retain.

(f) EPA may, pursuant to § 90.123, void ab initio a certificate of conformity for an engine family for which the manufacturer fails to retain the records required in this section or to provide such information to the Administrator upon request.

[65 FR 24311, Apr. 25, 2000]

§ 90.219 End-of-year and final reports under the optional program.

(a) End-of-year and final reports must indicate the engine family, the engine class, the actual production volume, the values required to calculate credits as given in § 90.216, and the number of credits generated/required. Manufacturers must also submit how and where credit surpluses were dispersed (or are to be banked) and/or how and through what means credit deficits

were met. Copies of contracts related to credit trading must be included or supplied by the broker, if applicable. The report must include a calculation of credit balances to show that the credit summation for all engines is equal to or greater than zero (or less than zero in cases of negative credit balances as permitted in § 90.216(c)). For model years 2008 through 2010, the report must include a calculation of the production weighted average $HC+NO_X$ FEL for handheld engine families to show compliance with the provisions of § 90.212(b).

(b) The calculation of eligible production for end-of-year and final reports must be based on engines produced for the United States market, excluding engines which are subject to state emission standards pursuant to a waiver granted by EPA under section 209(e) of the Act. Upon advance written request, the Administrator will consider other methods to track engines for credit calculation purposes that provide high levels of confidence that eligible production or sales are accurately counted.

(c)(1) End-of-year reports must be submitted within 90 days of the end of the model year to: Manager, Engine Compliance Programs Group (6403–J), U.S. Environmental Protection Agency, Washington, DC 20460.

(2) Unless otherwise approved by the Administrator, final reports must be submitted within 270 days of the end of the model year to: Manager, Engine Compliance Programs Group (6403–J), U.S. Environmental Protection Agency, Washington, DC 20460.

(d) Failure by a manufacturer to submit any end-of-year or final reports in the specified time for any engines subject to regulation under this part is a violation of § 90.1003(a)(2) and section 213(d) of the Clean Air Act for each engine.

(e) A manufacturer generating credits for banking only who fails to submit end-of-year reports in the applicable specified time period (90 days after the end of the model year) may not use the credits until such reports are received and reviewed by EPA. Use of projected credits pending EPA review is not permitted in these circumstances.

(f) Errors discovered by EPA or the manufacturer in the end-of-year report, including errors in credit calculation, may be corrected in the final report.

(g) If EPA or the manufacturer determines that a reporting error occurred on an end-of-year or final report previously submitted to EPA under this section, the manufacturer's credits and credit calculations must be recalculated. Erroneous positive credits will be void except as provided in paragraph (h) of this section. Erroneous negative credit balances may be adjusted by EPA.

(h) If EPA review determines a reporting error in the manufacturer's favor (that is, resulting in an increased credit balance) or if the manufacturer discovers such an error within 270 days of the end of the model year, EPA shall restore the credits for use by the manufacturer.

[65 FR 24312, Apr. 25, 2000]

§ 90.220 Request for hearing.

An engine manufacturer may request a hearing on the Administrator's voiding of the certificate under §§ 90.203(h), 90.215(e), 90.216(f), 90.217(c), or 90.218(f), pursuant to § 90.124. The procedures of § 90.125 shall apply to any such hearing.

[65 FR 24312, Apr. 25, 2000]

Subpart D—Emission Test Equipment Provisions

§ 90.301 Applicability.

(a) This subpart describes the equipment required in order to perform exhaust emission tests on new nonroad spark-ignition engines and vehicles subject to the provisions of subpart A of this part. Certain text in this subpart is identified as pertaining to Phase 1 or Phase 2 engines. Such text pertains only to engines of the specified Phase. If no indication of Phase is given, the text pertains to all engines, regardless of Phase.

(b) Exhaust gases, either raw or dilute, are sampled while the test engine is operated using a steady state test cycle on an engine dynamometer. The exhaust gases receive specific component analysis determining concentration of pollutant. Emission concentrations are converted to mass emission

rates in grams per hour based on either fuel flow, fuel flow and engine intake air flow, or exhaust volume flow. Weighted emission rates are reported as grams per brake-kilowatt hour (g/kW-hr). See subpart E of this part for a complete description of the test procedure.

(c) Additional information about system design, calibration methodologies, and so forth, for raw gas sampling can be found in part 86, subpart D of this chapter. Examples for system design, calibration methodologies, and so forth, for dilute exhaust gas sampling can be found in part 86, subpart N of this chapter.

(d) For Phase 2 Class I, Phase 2 Class I-B, and Phase 2 Class II natural gas fueled engines, the following sections from 40 CFR Part 86 are applicable to this subpart. The requirements of the following sections from 40 CFR Part 86 which pertain specifically to the measurement and calculation of non-methane hydrocarbon (NMHC) exhaust emissions from otto cycle heavy-duty engines must be followed when determining the NMHC exhaust emissions from Phase 2 Class I, Phase 2 Class I–B, and Phase 2 Class II natural gas fueled engines. Those sections are: 40 CFR 86.1306–90 Equipment required and specifications; overview, 40 CFR 86.1309–90 Exhaust gas sampling system; otto-cycle engines, 40 CFR 86.1311–94 Exhaust gas analytical system; CVS bag sampling, 40 CFR 86.1313–94(e) Fuel Specification—Natural gas-fuel, 40 CFR 86.1314–94 Analytical gases, 40 CFR 86.1316–94 Calibrations; frequency and overview, 40 CFR 86.1321–94 Hydrocarbon analyzer calibration, 40 CFR 86.1325–94 Methane analyzer calibration, 40 CFR 86.1327–94 Engine dynamometer test procedures, overview, 40 CFR 86.1340–94 Exhaust sample analysis, 40 CFR 86.1342–94 Calculations; exhaust emissions, 40 CFR 86.1344–94(d) Required information—Pre-test data, 40 CFR 86.1344–94(e) Required information—Test data.

[60 FR 34598, July 3, 1995, as amended at 64 FR 15243, Mar. 30, 1999; 65 FR 24312, Apr. 25, 2000]

§ 90.302 Definitions.

The definitions in § 90.3 apply to this subpart. The following definitions also apply to this subpart.

Intermediate speed means the engine speed which is 85 percent of the rated speed.

Natural gas means a fuel whose primary constituent is methane.

Rated speed means the speed at which the manufacturer specifies the maximum rated power of an engine.

[64 FR 15243, Mar. 30, 1999]

§ 90.303 Symbols, acronyms, abbreviations.

(a) The acronyms and abbreviations in § 90.5 apply to this subpart.

(b) The symbols in Table 1 in Appendix A of this subpart apply to this subpart.

§ 90.304 Test equipment overview.

(a) All engines subject to this subpart are tested for exhaust emissions. Engines are operated on dynamometers meeting the specification given in § 90.305.

(b) The exhaust is tested for gaseous emissions using a raw gas sampling system as described in § 90.414 or a constant volume sampling (CVS) system as described in § 90.421. Both systems require analyzers (see paragraph (c) of this section) specific to the pollutant being measured.

(c) Analyzers used are a non-dispersive infrared (NDIR) absorption type for carbon monoxide and carbon dioxide analysis; paramagnetic (PMD), zirconia (ZRDO), or electrochemical type (ECS) for oxygen analysis; a flame ionization (FID) or heated flame ionization (HFID) type for hydrocarbon analysis; and a chemiluminescent detector (CLD) or heated chemiluminescent detector (HCLD) for oxides of nitrogen analysis.

§ 90.305 Dynamometer specifications and calibration accuracy.

(a) *Dynamometer specifications.* The dynamometer test stand and other instruments for measurement of speed

and power output must meet the engine speed and torque accuracy requirements shown in Table 2 in Appendix A of this subpart. The dynamometer must be capable of performing the test cycle described in § 90.410.

(b) *Dynamometer calibration accuracy.* (1) The dynamometer test stand and other instruments for measurement of power output must meet the calibration frequency shown in Table 2 in Appendix A of this subpart.

(2) A minimum of three calibration weights for each range used is required. The weights must be equally spaced and traceable to within 0.5 percent of National Institute for Standards and Testing (NIST) weights. Laboratories located in foreign countries may certify calibration weights to local government bureau standards.

§ 90.306 Dynamometer torque cell calibration.

(a)(1) Any lever arm used to convert a weight or a force through a distance into a torque must be used in a horizontal position for horizontal shaft dynamometers (± five degrees). For vertical shaft dynamometers, a pulley system may be used to convert the dynamometer's horizontal loading into the vertical plane.

(2) Calculate the indicated torque (IT) for each calibration weight to be used by:

IT=Moment Arm (meters) × Calibration Weight (Newtons)

(3) Attach each calibration weight specified in § 90.305(b)(2) to the moment arm at the calibration distance determined in paragraph (a)(2) of this section. Record the power measurement equipment response (N–m) to each weight.

(4) Compare the torque value measured to the calculated torque.

(5) The measured torque must be within two percent of the calculated torque.

(6) If the measured torque is not within two percent of the calculated torque, adjust or repair the system. Repeat steps in paragraphs (a)(1) through (a)(6) of this section with the adjusted or repaired system.

(b) Option. A master load-cell or transfer standard may be used to verify the torque measurement system.

(1) The master load-cell and read out system must be calibrated using weights specified in § 90.305(b)(2).

(2) Attach the master load-cell and loading system.

(3) Load the dynamometer to a minimum of three equally spaced torque values as indicated by the master load-cell for each in-use range used.

(4) The in-use torque measurement must be within two percent of the torque measured by the master system for each load used.

(5) If the in-use torque is not within two percent of the master torque, adjust or repair the system. Repeat steps in paragraphs (b)(2) through (b)(4) of this section with the adjusted or repaired system.

(c) Calibrated resistors may not be used for engine flywheel torque transducer calibration, but may be used to span the transducer prior to engine testing.

(d) Other engine dynamometer system calibrations such as speed are performed as specified by the dynamometer manufacturer or as dictated by good engineering practice.

§ 90.307 Engine cooling system.

An engine cooling system is required with sufficient capacity to maintain the engine at normal operating temperatures as prescribed by the engine manufacturer. Auxiliary fan(s) may be used to maintain sufficient engine cooling during engine dynamometer operation.

§ 90.308 Lubricating oil and test fuels.

(a) *Lubricating oil.* Use the engine lubricating oil which meets the engine manufacturer's specifications for a particular engine and intended usage.

(1) Manufacturers must use engine lubricants representative of commercially available engine lubricants.

(2) For 2-stroke engines, the fuel/oil mixture ratio must be that which is recommended by the manufacturer.

(b) *Test Fuels—Certification.* (1) The manufacturer must use gasoline having the specifications, or substantially equivalent specifications approved by the Administrator, as specified in Table 3 in Appendix A of this subpart

for exhaust emission testing of gasoline fueled engines. As an option, manufacturers may use the fuel specified in § 86.1313–94(a) of this chapter for gasoline fueled engines.

(2) Alternative fuels, such as natural gas, propane, and methanol, used for exhaust emission testing and service accumulation of alternative fuel spark-ignition engines must be representative of commercially available alternative fuels.

(i) The manufacturer shall recommend the alternative fuel to be used for certification testing and engine service accumulation in accordance with paragraph (b)(3) of this section.

(ii) The Administrator shall determine the alternative fuel to be used for testing and engine service accumulation, taking into consideration the alternative fuel recommended by the manufacturer.

(3) Other fuels may be used for testing provided:

(i) They are commercially viable;

(ii) Information acceptable to the Administrator is provided to show that only the designated fuel would be used in customer service; and

(iii) Fuel specifications are approved in writing by the Administrator prior to the start of testing.

(c) *Test fuels—service accumulation and aging*. Unleaded gasoline representative of commercial gasoline generally available through retail outlets must be used in service accumulation and aging for gasoline-fueled spark-ignition engines. As an alternative, the certification test fuels specified under paragraph (b) of this section may be used for engine service accumulation and aging. Leaded fuel may not be used during service accumulation or aging.

[60 FR 34598, July 3, 1995, as amended at 64 FR 15243, Mar. 30, 1999]

§ 90.309 Engine intake air temperature measurement.

(a) The measurement location must be within 10 cm of the engine intake system (i.e., the air cleaner, for most engines.)

(b) The temperature measurements must be accurate to within ± 2 °C.

§ 90.310 Engine intake air humidity measurement.

This section refers to engines which are supplied with intake air other than the ambient air in the test cell (i.e., air which has been pumped directly to the engine air intake system). For engines which use ambient test cell air for the engine intake air, the ambient test cell humidity measurement may be used.

(a) *Humidity conditioned air supply*. Air that has had its absolute humidity altered is considered humidity-conditioned air. For this type of intake air supply, the humidity measurements must be made within the intake air supply system and after the humidity conditioning has taken place.

(b) *Unconditioned air supply*. Humidity measurements in unconditioned intake air supply systems must be made in the intake air stream entering the supply system. Alternatively, the humidity measurements can be measured within the intake air supply stream.

§ 90.311 Test conditions.

(a) *General requirements*. (1) Ambient temperature levels encountered by the test engine throughout the test sequence may not be less than 20 °C or more than 30 °C. All engines must be installed on the test bed at their design installation angle to prevent abnormal fuel distribution.

(2) Calculate all volumes and volumetric flow rates at standard conditions for temperature and pressure, and use these conditions consistently throughout all calculations. Standard conditions for temperature and pressure are 25 °C and 101.3 kPa.

(b) *Engine test conditions*. Measure the absolute temperature (designated as T and expressed in Kelvin) of the engine air at the inlet to the engine and the dry atmospheric pressure (designated as p_s and expressed in kPa), and determine the parameter f according to the following provisions for naturally aspirated engines:

$$f = \frac{99}{p_s} \times \left(\frac{T}{298}\right)^{0.7}$$

For a certification test to be recognized as valid, the parameter f shall be

between the limits as shown below: 0.96<f<1.04

§ 90.312 Analytical gases.

(a) The shelf life of a calibration gas may not be exceeded. The expiration date stated by the gas supplier must be recorded.

(b) *Pure gases*. The required purity of the gases is defined by the contamination limits specified in this subsection. The following gases must be available for operation:

(1) Purified nitrogen, also refered to as ''zero-grade nitrogen'' (Contamination ≤ 1 ppm C, ≤ 1 ppm CO, ≤ 400 ppm CO_2, ≤ 0.1 ppm NO);

(2) Purified oxygen (Purity 99.5 percent vol O_2);

(3) Hydrogen-helium mixture (40 ± 2 percent hydrogen, balance helium) (Contamination ≤ 1 ppm C, ≤ 400 ppm CO);

(4) Purified synthetic air, also refered to as ''zero air'' or ''zero gas'' (Contamination ≤ 1 ppm C, ≤ 1 ppm CO, ≤ 400 ppm CO_2, ≤ 0.1 ppm NO) (Oxygen content between 18–21 percent vol.).

(c) *Calibration and span gases*. (1) Calibration gas values are to be derived from NIST ''Standard Reference Materials'' (SRM's) and are to be single blends as specified in this subsection.

(2) Mixtures of gases having the following chemical compositions must be available:

C_3H_8 and purified synthetic air and/or C_3H_8 and purified nitrogen;
CO and purified nitrogen;
NO_X and purified nitrogen (the amount of NO_2 contained in this calibration gas must not exceed five percent of the NO content);
CO_2 and purified nitrogen.

NOTE: For the HFID or FID the manufacturer may choose to use as a diluent span gas and the calibration gas either purified synthetic air or purified nitrogen. Any mixture of C_3H_8 and purified synthetic air which contains a concentration of propane higher than what a gas supplier considers to be safe may be substituted with a mixture of C_3H_8 and purified nitrogen. However, the manufacturer must be consistent in the choice of diluent (zero air or purified nitrogen) between the calibration and span gases. If a manufacturer chooses to use C_3H_8 and purified nitrogen for the calibration gases, then purified nitrogen must be the diluent for the span gases.

(3) The true concentration of a span gas must be within ± two percent of the NIST gas standard. The true concentration of a calibration gas must be within ± one percent of the NIST gas standard. The use of precision blending devices (gas dividers) to obtain the required calibration gas concentrations is acceptable. Give all concentrations of calibration gas on a volume basis (volume percent or volume ppm).

(4) The gas concentrations used for calibration and span may also be obtained by means of a gas divider, diluting either with purified N_2 or with purified synthetic air. The accuracy of the mixing device must be such that the concentration of the diluted gases may be determined to within ± two percent.

(d) Oxygen interference check gases must contain propane with 350 ppmC ± 75 ppmC hydrocarbon. Determine the concentration value to calibration gas tolerances by chromatographic analysis of total hydrocarbons plus impurities or by dynamic blending. For gasoline fueled engines, oxygen contentration must be between 0 and 1 percent O_2. Nitrogen must be the predominant diluent with the balance oxygen.

(e) Fuel for the hydrocarbon flame ionization detector (HC-FID) must be a blend of 40 ± two percent hydrogen with the balance being helium. The mixture must contain less than one ppm equivalent carbon response; 98 to 100 percent hydrogen fuel may be used with advance approval of the Administrator.

(f) *Hydrocarbon analyzer burner air*. The concentration of oxygen must be within one mole percent of the oxygen concentration of the burner air used in the latest oxygen interference check (percent O_2 I), see § 90.316(d). If the difference in oxygen concentration is greater than one mole percent, then the oxygen interference must be checked and, if necessary, the analyzer adjusted to meet the percent O_2 I requirements. The burner air must contain less than two ppmC hydrocarbon.

§ 90.313 Analyzers required.

(a) *Analyzers*. Analyze measured gases with the following instruments:

(1) *Carbon monoxide (CO) analysis*. (i) The carbon monoxide analyzer shall be of the non-dispersive infrared (NDIR) absorption type.

(ii) The use of linearizing circuits is permitted.

(2) *Carbon dioxide (CO_2) analysis.* (i) The carbon dioxide analyzer shall be of the non-dispersive infrared (NDIR) absorption type.

(ii) The use of linearizing circuits is permitted.

(3) *Oxygen (O_2) analysis.* Oxygen (O_2) analyzers may be of the paramagnetic (PMD), zirconia (ZRDO) or electrochemical type (ECS).

(4) *Hydrocarbon (HC) analysis.* (i) For Raw Gas Sampling, the hydrocarbon analyzer shall be of the heated flame ionization (HFID) type. For constant volume sampling, the hydrocarbon analyzer may be of the flame ionization (FID) type or of the heated flame ionization (HFID) type.

(ii) For the HFID system, if the temperature of the exhaust gas at the sample probe is below 190 °C, the temperature of the valves, pipe work, and so forth, must be controlled so as to maintain a wall temperature of 190 °C ±11 °C. If the temperature of the exhaust gas at the sample probe is above 190 °C, the temperature of the valves, pipe work, and so forth, must be controlled so as to maintain a wall temperature greater than 180 °C.

(iii) For the HFID analyzer, the detector, oven, and sample-handling components within the oven must be suitable for continuous operation at temperatures to 200 °C. It must by capable of maintaining temperature within ±5.5 °C of the set point.

(iv) Fuel and burner air must conform to the specifications in § 90.312.

(v) The percent of oxygen interference must be less than three percent, as specified in § 90.316(d).

(5) *Oxides of nitrogen (NO_X)* analysis.

(i) This analysis device consists of the following items:

(A) A NO_2 to NO converter. The NO_2 to NO converter efficiency must be at least 90 percent.

(B) An ice bath located after the NO_X converter (optional).

(C) A chemiluminescent detector (CLD) or heated chemiluminescent detector (HCLD).

(ii) The quench interference must be less than 3.0 percent as measured in § 90.325.

(b) *Other analyzers and equipment.* Other types of analyzers and equipment may be used if shown to yield equivalent results and if approved in advance by the Administrator.

(c) The following requirements must be incorporated as indicated in systems used for testing under this subpart.

(1) Carbon monoxide and carbon dioxide measurements must be made on a dry basis (for raw exhaust measurement only). Specific requirements for the means of drying the sample can be found in § 90.313(e).

(2) Calibration or span gases for the NO_X measurement system must pass through the NO_2 to NO converter.

(d) The electromagnetic compatibility (EMC) of the equipment must be on a level as to minimize additional errors.

(e) *Gas drying.* Chemical dryers are not an acceptable method of removing water from the sample. Water removal by condensation is acceptable. If water is removed by condensation, the sample gas temperature or sample dew point must be monitored either within the water trap or downstream and its temperature must not exceed 7 °C. A water trap performing this function is an acceptable method. Means other than condensation may be used only with prior approval from the Administrator.

§ 90.314 Analyzer accuracy and specifications.

(a) *Measurement and accuracy—general.* The analyzers must have a measuring range which allows them to measure the concentrations of the exhaust gas sample pollutants with the accuracies shown in Table 2 in Appendix A of this subpart.

(1) *Precision.* The precision of the analyzer must be, at worst, two percent of full-scale concentration for each range used. The precision is defined as 2.5 times the standard deviation(s) of 10 repetitive responses to a given calibration or span gas.

(2) *Noise.* The analyzer peak-to-peak response to zero and calibration or span gases over any 10-second period must not exceed two percent of full-scale chart deflection on all ranges used.

(3) *Zero drift.* The analyzer zero-response drift during a one-hour period must be less than two percent of full-scale chart deflection on the lowest range used. The zero-response is defined as the mean response including noise to a zero-gas during a 30-second time interval.

(4) *Span drift.* The analyzer span drift during a one-hour period must be less than two percent of full-scale chart deflection on the lowest range used. The analyzer span is defined as the difference between the span-response and the zero-response. The span-response is defined as the mean response including noise to a span gas during a 30-second time interval.

(b) *Operating procedure for analyzers and sampling system.* Follow the start-up and operating instructions of the instrument manufacturer or use good engineering practice. Adhere to the minimum requirements given in §§ 90.316 through 90.325 and § 90.409.

(c) *Emission measurement accuracy—Bag sampling.* (1) Good engineering practice dictates that exhaust emission sample analyzer readings below 15 percent of full-scale chart deflection should generally not be used.

(2) Some high resolution read-out systems, such as computers, data loggers, and so forth, can provide sufficient accuracy and resolution below 15 percent of full scale. Such systems may be used provided that additional calibrations are made to ensure the accuracy of the calibration curves. The following procedure for calibration below 15 percent of full scale may be used:

NOTE TO PARAGRAPH (c): If a gas divider is used, the gas divider must conform to the accuracy requirements as follows. The use of precision blending devices (gas dividers) to obtain the required calibration gas concentrations is acceptable, provided that the blended gases are accurate to within ± 1.5 percent of NIST gas standards or other gas standards which have been approved by the Administrator. This accuracy implies that primary gases used for blending must be ''named'' to an accuracy of at least ± one percent, traceable to NIST or other approved gas standards.

(i) Span the full analyzer range using a top range calibration gas. The span gases must be accurate to within ± two percent of NIST gas standards or other gas standards which have been approved by the Administrator.

(ii) Generate a calibration curve according to, and meeting the requirements, of the sections describing analyzer calibrations which are found in §§ 90.316, 90.317, 90.318, and 90.320.

(iii) Select a calibration gas (a span gas may be used for calibrating the CO_2 analyzer) with a concentration between the two lowest non-zero gas divider increments. This gas must be ''named'' to an accuracy of ± one percent of NIST gas standards or other standards approved by the Administrator.

(iv) Using the calibration curve fitted to the points generated in paragraphs (c)(2) (i) and (ii) of this section, check the concentration of the gas selected in paragraph (c)(2)(iii) of this section. The concentration derived from the curve must be within ± 2.3 percent (± 2.8 percent for CO_2 span gas) of the gas's original named concentration.

(v) Provided the requirements of paragraph (c)(2)(iv) of this section are met, use the gas divider with the gas selected in paragraph (c)(2)(iii) of this section and determine the remainder of the calibration points. Fit a calibration curve per §§ 90.316, 90.317, 90.318, and 90.320 of this chapter for the entire analyzer range.

(d) *Emission measurement accuracy—continuous sampling.* Analyzers used for continuous analysis must be operated such that the measured concentration falls between 15 and 100 percent of full-scale chart deflection. Exceptions to these limits are:

(1) The analyzer's response may be less than 15 percent or more than 100 percent of full scale if automatic range change circuitry is used and the limits for range changes are between 15 and 100 percent of full-scale chart deflection;

(2) The analyzer's response may be less than 15 percent of full scale if:

(i) The alternative in paragraph (c)(2) of this section is used to ensure that the accuracy of the calibration curve is maintained below 15 percent; or

(ii) The full-scale value of the range is 155 ppm (C) or less; or

(iii) The emissions from the engine are erratic and the integrated chart deflection value for the cycle is greater than 15 percent of full scale; or

(iv) The contribution of all data read below the 15 percent level is less than

10 percent by mass of the final test results.

§90.315 Analyzer initial calibration.

(a) *Warming-up time*. The warming-up time should be according to the recommendations of the manufacturer. If not specified, a minimum of two hours should be allowed for warming up the analyzers.

(b) *NDIR, FID, and HFID analyzer*. Tune and maintain the NDIR analyzer per the instrument manufacturer recommendations or specifications or using good engineering practice. The combustion flame of the FID or HFID analyzer must be optimized in order to meet the specifications in §90.316(b).

(c) *Zero setting and calibration*. Using purified synthetic air (or nitrogen), set the CO, CO_2, NO_X, and HC analyzers at zero. Connect the appropriate calibrating gases to the analyzers and record the values. Use the same gas flow rates and pressure as when sampling exhaust.

(d) *Rechecking of zero setting*. Recheck the zero setting and, if necessary, repeat the procedure described in paragraph (c) of this section.

§90.316 Hydrocarbon analyzer calibration.

(a) Calibrate the FID and HFID hydrocarbon analyzer as described in this section. Operate the HFID to a set point ± 5.5 °C between 185 and 197 °C.

(b) *Initial and periodic optimization of detector response*. Prior to initial use and at least annually thereafter, adjust the FID and HFID hydrocarbon analyzer for optimum hydrocarbon response as specified in this paragraph. Alternative methods yielding equivalent results may be used, if approved in advance by the Administrator.

(1) Follow good engineering practices for initial instrument start-up and basic operating adjustment using the appropriate fuel (see §90.312) and purified synthetic air or zero-grade nitrogen.

(2) Use of one of the following procedures is required for FID or HFID optimization:

(i) The procedure outlined in Society of Automotive Engineers (SAE) paper No. 770141, ''Optimization of a Flame Ionization Detector for Determination of Hydrocarbon in Diluted Automotive Exhausts;'' author, Glenn D. Reschke. This procedure has been incorporated by reference. See §90.7.

(ii) The HFID optimization procedures outlined in §86.331–79 of this chapter.

(iii) Alternative procedures may be used if approved in advance by the Administrator.

(3) After the optimum flow rates have been determined, record them for future reference.

(c) *Initial and periodic calibration*. Prior to initial use and monthly thereafter, or within one month prior to the certification test, the FID or HFID hydrocarbon analyzer must be calibrated on all normally used instrument ranges using the steps in this paragraph. Use the same flow rate and pressures as when analyzing samples. Introduce calibration gases directly at the analyzer. An optional method for dilute sampling described in §86.1310–90(b)(3)(i) may be used.

(1) Adjust analyzer to optimize performance.

(2) Zero the hydrocarbon analyzer with purified synthetic air or zero-grade nitrogen.

(3) Calibrate on each used operating range with calibration gases having nominal concentrations between 10 and 90 percent of that range. A minimum of six evenly spaced points covering at least 80 percent of the 10 to 90 range (64 percent) is required (see following table).

Example calibration points (%)	Acceptable for calibration?
20, 30, 40, 50, 60, 70	No, range covered is 50 percent, not 64.
20, 30, 40, 50, 60, 70, 80, 90	Yes.
10, 25, 40, 55, 70, 85	Yes.
10, 30, 50, 70, 90	No, though equally spaced and entire range covered, a minimum of six points are needed.

For each range calibrated, if the deviation from a least-squares best-fit straight line is two percent or less of the value at each data point, calculate concentration values by use of a single calibration factor for that range. If the deviation exceeds two percent at any point, use the best-fit non-linear equation which represents the data to within two percent of each test point to determine concentration.

(d) *Oxygen interference optimization.* Prior to initial use and monthly thereafter, perform the oxygen interference optimization as described in this paragraph. Choose a range where the oxygen interference check gases will fall in the upper 50 percent. Conduct the test, as outlined in this paragraph, with the oven temperature set as required by the instrument manufacturer. Oxygen interference check gas specifications are found in § 90.312(d).

(1) Zero the analyzer.

(2) Span the analyzer with the 21 percent oxygen blend.

(3) Recheck zero response. If it has changed more than 0.5 percent of full scale repeat paragraphs (d)(1) and (d)(2) of this section to correct the problem.

(4) Introduce the five percent and 10 percent oxygen interference check gases.

(5) Recheck the zero response. If it has changed by more than ± one percent of full scale, repeat the test.

(6) Calculate the percent of oxygen interference (designated as percent O_2 I) for each mixture in paragraph (d)(4) of this section according to the following equation.

$$\text{Percent } O_2\text{I} = \frac{\text{B} - \text{Analyzer response (ppmC)}}{\text{B}}\ (100)$$

$$\text{Analyzer response} = \left(\frac{\text{A}}{\text{\% of full-scale analyzer response due to A}}\right) \times (\text{\% of full-scale analyzer response due to B})$$

Where:

A = hydrocarbon concentration (ppmC) of the span gas used in paragraph (d)(2) of this section.

B = hydrocarbon concentration (ppmC) of the oxygen interference check gases used in paragraph (d)(4) of this section.

(7) The percent of oxygen interference (designated as percent O_2 I) must be less than ± three percent for all required oxygen interference check gases prior to testing.

(8) If the oxygen interference is greater than the specifications, incrementally adjust the air flow above and below the manufacturer's specifications, repeating paragraphs (d)(1) through (d)(7) of this section for each flow.

(9) If the oxygen interference is greater than the specification after adjusting the air flow, vary the fuel flow and thereafter the sample flow, repeating paragraphs (d)(1) through (d)(7) of this section for each new setting.

(10) If the oxygen interference is still greater than the specifications, repair or replace the analyzer, FID fuel, or burner air prior to testing. Repeat this section with the repaired or replaced equipment or gases.

§ 90.317 Carbon monoxide analyzer calibration.

(a) Calibrate the NDIR carbon monoxide analyzer as described in this section.

(b) *Initial and periodic interference.* Prior to its initial use and annually thereafter, check the NDIR carbon monoxide analyzer for response to water vapor and CO_2.

(1) Follow good engineering practices for instrument start-up and operation.

Adjust the analyzer to optimize performance on the most sensitive range to be used.

(2) Zero the carbon monoxide analyzer with either purified synthetic air or zero-grade nitrogen.

(3) Bubble a mixture of three percent CO_2 in N_2 through water at room temperature and record analyzer response.

(4) An analyzer response of more than one percent of full scale for ranges above 300 ppm full scale or more than three ppm on ranges below 300 ppm full scale requires corrective action. (Use of conditioning columns is one form of corrective action which may be taken.)

(c) *Initial and periodic calibration.* Prior to its initial use and monthly thereafter, or within one month prior to the certification test, calibrate the NDIR carbon monoxide analyzer.

(1) Adjust the analyzer to optimize performance.

(2) Zero the carbon monoxide analyzer with either purified synthetic air or zero-grade nitrogen.

(3) Calibrate on each used operating range with carbon monoxide-in-N_2 calibration gases having nominal concentrations between 10 and 90 percent of that range. A minimum of six evenly spaced points covering at least 80 percent of the 10 to 90 range (64 percent) is required (see following table).

Example calibration points (%)	Acceptable for calibration?
20, 30, 40, 50, 60, 70	No, range covered is 50 percent, not 64.
20, 30, 40, 50, 60, 70, 80, 90	Yes.
10, 25, 40, 55, 70, 85	Yes.
10, 30, 50, 70, 90	No, though equally spaced and entire range covered, a minimum of six points are needed.

Additional calibration points may be generated. For each range calibrated, if the deviation from a least-squares best-fit straight line is two percent or less of the value at each data point, calculate concentration values by use of a single calibration factor for that range. If the deviation exceeds two percent at any point, use the best-fit non-linear equation which represents the data to within two percent of each test point to determine concentration.

§ 90.318 Oxides of nitrogen analyzer calibration.

(a) Calibrate the chemiluminescent oxides of nitrogen analyzer as described in this section.

(b) *Initial and Periodic Interference:* Prior to its initial use and monthly thereafter, or within one month prior to the certification test, check the chemiluminescent oxides of nitrogen analyzer for NO_2 to NO converter efficiency. Figure 1 in Appendix B of this subpart is a reference for paragraphs (b)(1) through (11) of this section:

(1) Follow good engineering practices for instrument start-up and operation. Adjust the analyzer to optimize performance.

(2) Zero the oxides of nitrogen analyzer with purified synthetic air or zero-grade nitrogen.

(3) Connect the outlet of the NO_X generator to the sample inlet of the oxides of nitrogen analyzer which has been set to the most common operating range.

(4) Introduce into the NO_X generator analyzer-system an NO-in-nitrogen (N_2) mixture with an NO concentration equal to approximately 80 percent of the most common operating range. The NO_2 content of the gas mixture must be less than five percent of the NO concentration.

(5) With the oxides of nitrogen analyzer in the NO mode, record the concentration of NO indicated by the analyzer.

(6) Turn on the NO_X generator O_2 (or air) supply and adjust the O_2 (or air) flow rate so that the NO indicated by the analyzer is about 10 percent less than indicated in paragraph (b)(5) of this section. Record the concentration of NO in this NO+O_2 mixture as value ''c.''

(7) Switch the NO_X generator to the generation mode and adjust the generation rate so that the NO measured on the analyzer is 20 percent of that measured in paragraph (b)(5) of this section.

There must be at least 10 percent unreacted NO at this point. Record the concentration of residual NO as value ''d.''

(8) Switch the oxides of nitrogen analyzer to the NO_X mode and measure total NO_X. Record this value as ''a.''

(9) Switch off the NO_X generator but maintain gas flow through the system. The oxides of nitrogen analyzer will indicate the NO_X in the $NO+O_2$ mixture. Record this value as ''b''.

(10) Turn off the NO_X generator O_2 (or air) supply. The analyzer will now indicate the NO_X in the original NO-in-N_2 mixture. This value should be no more than five percent above the value indicated in paragraph (b)(4) of this section.

(11) Calculate the efficiency of the NO_X converter by substituting the concentrations obtained into the following equation:

$$\text{percent efficiency} = \left(1 + \frac{a-b}{c-d}\right) \times 100$$

Where:

a = concentration obtained in paragraph (b)(8),

b = concentration obtained in paragraph (b)(9),

c = concentration obtained in paragraph (b)(6),

d = concentration obtained in paragraph (b)(7).

If converter efficiency is less than 90 percent, corrective action will be required.

(c) *Initial and periodic calibration.* Prior to its initial use and monthly thereafter, or within one month prior to the certification test, calibrate the chemiluminescent oxides of nitrogen analyzer on all normally used instrument ranges. Use the same flow rate as when analyzing samples. Proceed as follows:

(1) Adjust analyzer to optimize performance.

(2) Zero the oxides of nitrogen analyzer with purified synthetic air or zero-grade nitrogen.

(3) Calibrate on each normally used operating range with NO-in-N_2 calibration gases having nominal concentrations between 10 and 90 percent of that range. A minimum of six evenly spaced points covering at least 80 percent of the 10 to 90 range (64 percent) is required (see following table).

Example calibration points (%)	Acceptable for calibration?
20, 30, 40, 50, 60, 70	No, range covered is 50 percent, not 64
20, 30, 40, 50, 60, 70, 80, 90	Yes.
10, 25, 40, 55, 70, 85	Yes.
10, 30, 50, 70, 90	No, though equally spaced and entire range covered, a minimum of six points are needed.

Additional calibration points may be generated. For each range calibrated, if the deviation from a least-squares best-fit straight line is two percent or less of the value at each data point, calculate concentration values by use of a single calibration factor for that range. If the deviation exceeds two percent at any point, use the best-fit non-linear equation which represents the data to within two percent of each test point to determine concentration.

(d) The initial and periodic interference, system check, and calibration test procedures specified in § 86.332–79 of this chapter may be used in lieu of the procedures specified in this section.

§ 90.319 NO_X converter check.

(a) The efficiency of the converter used for the conversion of NO_2 to NO is tested as given in paragraphs (a)(1) through (a)(8) of this section.

(1) Using the test setup as shown in Figure 1 in Appendix B of this subpart (see also § 90.318 of this chapter) and the procedure described in paragraphs (a)(2) through (a)(8) of this section, test the efficiency of converters by means of an ozonator.

(2) Calibrate the HCLD or CLD in the most common operating range following the manufacturer's specifications using zero and span gas (the NO content of which must amount to about 80 percent of the operating range and the NO_2 concentration of the gas

mixture less than five percent of the NO concentration). The NO_X analyzer must be in the NO mode so that the span gas does not pass through the converter. Record the indicated concentration.

(3) Calculate the efficiency of the NO_X converter as described in § 90.318(b).

(4) Via a T-fitting, add oxygen continuously to the gas flow until the concentration indicated is about 20 percent less than the indicated calibration concentration given in paragraph (a)(2) of this section. Record the indicated concentration ''c.'' The ozonator is kept deactivated throughout the process.

(5) Activate the ozonator to generate enough ozone to bring the NO concentration down to about 20 percent (minimum 10 percent) of the calibration concentration given in paragraph (a)(2) of this section. Record the indicated concentration ''d.''

NOTE: If, with the analyzer in the most common range, the NO_X converter can not give a reduction from 80 percent to 20 percent, then use the highest range which will give the reduction.

(6) Switch the NO analyzer to the NO_X mode which means that the gas mixture (consisting of NO, NO_2, O_2 and N_2) now passes through the converter. Record the indicated concentration ''a.''

(7) Deactivate the ozonator. The mixture of gases described in paragraph (a)(6) of this section passes through the converter into the detector. Record the indicated concentration ''b.''

(8) Switched to NO mode with the ozonator deactivated, the flow of oxygen or purified synthetic air is also shut off. The NO_X reading of the analyzer may not deviate by more than ± five percent of the theoretical value of the figure given in paragraph (a)(2) of this section.

(b) The efficiency of the converter must be tested prior to each calibration of the NO_X analyzer.

(c) The efficiency of the converter may not be less than 90 percent.

§ 90.320 Carbon dioxide analyzer calibration.

(a) Prior to its initial use and monthly thereafter, or within one month prior to the certification test, calibrate the NDIR carbon dioxide analyzer as follows:

(1) Follow good engineering practices for instrument start-up and operation. Adjust the analyzer to optimize performance.

(2) Zero the carbon dioxide analyzer with either purified synthetic air or zero-grade nitrogen.

(3) Calibrate on each normally used operating range with carbon dioxide-in-N_2 calibration or span gases having nominal concentrations between 10 and 90 percent of that range. A minimum of six evenly spaced points covering at least 80 percent of the 10 to 90 range (64 percent) is required (see following table).

Example calibration points (%)	Acceptable for Calibration?
20, 30, 40, 50, 60, 70	No, range covered is 50 percent, not 64.
20, 30, 40, 50, 60, 70, 80, 90	Yes.
10, 25, 40, 55, 70, 85	Yes.
10, 30, 50, 70, 90	No, though equally spaced and entire range covered, a minimum of six points are needed.

Additional calibration points may be generated. For each range calibrated, if the deviation from a least-squares best-fit straight line is two percent or less of the value at each data point, calculate concentration values by use of a single calibration factor for that range. If the deviation exceeds two percent at any point, use the best-fit non-linear equation which represents the data to within two percent of each test point to determine concentration.

(b) The initial and periodic interference, system check, and calibration test procedures specified in §§ 86.316, 86.319, 86.320, 86.321, and 86.322 of this chapter may be used in lieu of the procedures in this section.

§ 90.321 NDIR analyzer calibration.

(a) *Detector optimization.* If necessary, follow the instrument manufacturer's instructions for initial start-up and basic operating adjustments.

(b) *Calibration curve.* Develop a calibration curve for each range used as follows:

(1) Zero the analyzer.

(2) Span the analyzer to give a response of approximately 90 percent of full-scale chart deflection.

(3) Recheck the zero response. If it has changed more than 0.5 percent of full scale, repeat the steps given in paragraphs (b)(1) and (b)(2) of this section.

(4) Record the response of calibration gases having nominal concentrations between 10 and 90 percent of full-scale concentration. A minimum of six evenly spaced points covering at least 80 percent of the 10 to 90 range (64 percent) is required (see following table).

Example calibration points (%)	Acceptable for calibration?
20, 30, 40, 50, 60, 70	No, range covered is 50 percent, not 64.
20, 30, 40, 50, 60, 70, 80, 90	Yes.
10, 25, 40, 55, 70, 85	Yes.
10, 30, 50, 70, 90	No, though equally spaced and entire range covered, a minimum of six points are needed.

(5) Generate a calibration curve. The calibration curve must be of fourth order or less, have five or fewer coefficients, and be of the form of the following equation (1) or (2). Include zero as a data point. Compensation for known impurities in the zero gas can be made to the zero-data point. The calibration curve must fit the data points within two percent of point or one percent of full scale, whichever is less.

$$y = Ax^4 + Bx^3 + Cx^2 + Dx + E \qquad (1)$$

$$y = \frac{x}{Ax^4 + Bx^3 + Cx^2 + Dx + E} \qquad (2)$$

where:

y = concentration

x = chart deflection

(6) Option. A new calibration curve need not be generated if:

(i) A calibration curve conforming to paragraph (b)(5) of this section exists; or,

(ii) The responses generated in paragraph (b)(4) of this section are within one percent of full scale or two percent of point, whichever is less, of the responses predicted by the calibration curve for the gases used in paragraph (b)(4) of this section.

(7) If multiple range analyzers are used, the lowest range used must meet the curve fit requirements below 15 percent of full scale.

(c) *Linear calibration criteria.* If any range is within two percent of being linear, a linear calibration may be used. To determine if this criterion is met:

(1) Perform a linear least-square regression on the data generated. Use an equation of the form y=mx, where x is the actual chart deflection and y is the concentration.

(2) Use the equation z=y/m to find the linear chart deflection (designated as z) for each calibration gas concentration (designated as y).

(3) Determine the linearity (designated as percent L) for each calibration gas by:

$$\%\,L = \frac{(z - x)}{\text{Full-scale linear chart deflection}} \times (100)$$

(4) The linearity criterion is met if the %L is less than ± two percent for each data point generated. For each emission test, use a calibration curve

of the form Y=mx. The slope (designated as m) is defined for each range by the spanning process.

§ 90.322 Calibration of other equipment.

Calibrate other test equipment used for testing as often as required by the test equipment manufacturer or as necessary according to good engineering practice.

§ 90.323 Analyzer bench checks.

(a) Prior to initial use and after major repairs, verify that each analyzer complies with the specifications given in Table 2 in Appendix A of this subpart.

(b) If a stainless steel NO_2 to NO converter is used, condition all new or replacement converters. The conditioning consists of either purging the converter with air for a minimum of four hours or until the converter efficiency is greater than 90 percent. The converter must be at operational temperature while purging. Do not use this procedure prior to checking converter efficiency on in-use converters.

§ 90.324 Analyzer leakage check.

(a) *Vacuum side leak check.* (1) Check any location within the analysis system where a vacuum leak could affect the test results.

(2) The maximum allowable leakage rate on the vacuum side is 0.5 percent of the in-use flow rate for the portion of the system being checked. The analyzer flows and bypass flows may be used to estimate the in-use flow rates.

(3) The sample probe and the connection between the sample probe and valve V2, see Figure 2 in Appendix B of this subpart, may be excluded from the leak check.

(b) *Pressure side leak check.* The maximum allowable leakage rate on the pressure side is five percent of the in-use flow rate.

§ 90.325 Analyzer interference checks.

(a) Gases present in the exhaust other than the one being analyzed can interfere with the reading in several ways. Positive interference occurs in NDIR and PMD instruments when the interfering gas gives the same effect as the gas being measured, but to a lesser degree. Negative interference occurs in NDIR instruments by the interfering gas broadening the absorption band of the measured gas, and in CLD instruments by the interfering gas quenching the radiation. The interference checks described in this section are to be made initially and after any major repairs that could affect analyzer performance.

(b) *CO analyzer water and CO_2 interference checks.* Bubble through water at room temperature a CO_2 span gas having a concentration of between 80 percent and 100 percent inclusive of full scale of the maximum operating range used during testing and record the analyzer response. For dry measurements, this mixture may be introduced into the sample system prior to the water trap. The analyzer response must not be more than one percent of full scale for ranges equal to or above 300 ppm or more than three ppm for ranges below 300 ppm.

(c) *NO^x analyzer quench check.* The two gases of concern for CLD (and HCLD) analyzers are CO_2 and water vapor. Quench responses to these two gases are proportional to their concentrations and, therefore, require test techniques to determine quench at the highest expected concentrations experienced during testing.

(1) *NO_X analyzer CO_2 quench check.* (i) Pass a CO_2 span gas having a concentration of 80 percent to 100 percent of full scale of the maximum operating range used during testing through the CO_2 NDIR analyzer and record the value ''a.''

(ii) Dilute the CO_2 span gas approximately 50 percent with NO span gas and pass through the CO_2 NDIR and CLD (or HCLD). Record the CO_2 and NO values as ''b'' and ''c'' respectively.

(iii) Shut off the CO_2 and pass only the NO span gas through the CLD (or HCLD). Record the NO value as ''d.''

(iv) Calculate the percent CO_2 quench as follows, not to exceed three percent:

$$\%\ CO_2\ \text{quench} = 100 \times \left(1 - \frac{(c \times a)}{(d \times a) - (d \times b)}\right) \times (a/b)$$

Where:

a = Undiluted CO_2 concentration (percent)
b = Diluted CO_2 concentration (percent)
c = Diluted NO concentration (ppm)
d = Undiluted NO concentration (ppm)

(2) *NO_X analyzer water quench check.* (i) This check applies to wet measurements only. An NO span gas having a concentration of 80 percent to 100 percent of full scale of a normal operating range is passed through the CLD (or HCLD) and the response recorded as ''D''. The NO span gas is then bubbled through water at room temperature and passed through the CLD (or HCLD) and the analyzer's response recorded as AR. Determine and record the analyzer's absolute operating pressure and the bubbler water temperature. (It is important that the NO span gas contains minimal NO_2 concentration for this check. No allowance for absorption of NO_2 in water has been made in the following quench calculations.)

(ii) Calculations for water quench must consider dilution of the NO span gas with water vapor and scaling of the water vapor concentration of the mixture to that expected during testing. Determine the mixture's saturated vapor pressure (designated as Pwb) that corresponds to the bubbler water temperature. Calculate the water concentration (''Z1'', percent) in the mixture by the following equation:

$$Z1 = 100 \times \frac{Pwb}{GP}$$

where GP is the analyzer's standard operating pressure (pascals).

(iii) Calculate the expected dilute NO span gas and water vapor mixture concentration (designated as D1) by the following equation:

$$D1 = D \times \left(1 - \frac{Z1}{100}\right)$$

§ 90.326 Pre- and post-test analyzer calibration.

Calibrate the range of each analyzer used during the engine exhaust emission test prior to and after each test in accordance with the following:

(a) Make the calibration by using a zero gas and a span gas. The span gas value must be between 75 percent and 100 percent of full scale, inclusive, of the measuring range.

(b) Use the same analyzer(s) flow rate and pressure as that used during exhaust emission test sampling.

(c) Warm-up and stabilize the analyzer(s) before the calibration is made.

(d) If necessary clean and/or replace filter elements before calibration is made.

(e) Calibrate analyzer(s) as follows:

(1) Zero the analyzer using the appropriate zero gas. Adjust analyzer zero if necessary. Zero reading should be stable.

(2) Span the analyzer using the appropriate span gas for the range being calibrated. Adjust the analyzer to the calibration set point if necessary.

(3) Re-check zero and span set points.

(4) If the response of the zero gas or span gas differs more than one percent of full scale, then repeat paragraphs (e)(1) through (3) of this section.

§ 90.327 Sampling system requirements.

(a) *Sample component surface temperature.* For sampling systems which use heated components, use engineering judgment to locate the coolest portion of each component (pump, sample line section, filters, and so forth) in the heated portion of the sampling system that has a separate source of power or heating element. Monitor the temperature at that location. If several components are within an oven, then only the surface temperature of the component with the largest thermal mass and the oven temperature need be measured.

(b) If water is removed by condensation, monitor the sample gas temperature or sample dew point either within

the water trap or downstream. It may not exceed 7 °C.

§ 90.328 Measurement equipment accuracy/calibration frequency table.

(a) The accuracy of measurements must be such that the maximum tolerances shown in Table 2 in Appendix A of this subpart are not exceeded.

(b) All equipment and analyzers must be calibrated according to the frequencies shown in Table 2 in Appendix A of this subpart.

(c) Prior to initial use and after major repairs, bench check each analyzer (see § 90.323).

(d) Calibrate equipment as specified in § 90.306 and §§ 90.315 through 90.322.

(e) At least monthly, or after any maintenance which could alter calibration, perform the following calibrations and checks.

(1) Leak check the vacuum side of the system (see § 90.324(a)).

(2) Verify that the automatic data collection system (if used) meets the requirements found in Table 2 in Appendix A of this subpart.

(3) Check the fuel flow measurement instrument to insure that the specifications in Table 2 in Appendix A of this subpart are met.

(f) Verify that all NDIR analyzers meet the water rejection ratio and the CO_2 rejection ratio as specified in § 90.325.

(g) Verify that the dynamometer test stand and power output instrumentation meet the specifications in Table 2 in Appendix A of this subpart.

§ 90.329 Catalyst thermal stress test.

(a) *Oven characteristics*. The oven used for thermally stressing the test catalyst must be capable of maintaining a temperature of 500 ± 5 °C and 1000 ± 10 °C.

(b) *Evaluation gas composition*. (1) A synthetic exhaust gas mixture is used for evaluating the effect of thermal stress on catalyst conversion efficiency.

(2) The synthetic exhaust gas mixture must have the following composition:

Constituent	Volume percent	Parts per million
Carbon Monoxide	1	.....
Oxygen	1.3	.....
Carbon Dioxide	3.8	.....
Water Vapor	10	.....
Sulfer dioxide	.....	20
Oxides of nitrogen	.....	280
Hydrogen	.....	3500
Hydrocarbon*	.....	4000
Nitrogen = Balance		

*Propylene/propane ratio = 2/1.

(c) *Phase 2 engines*. The catalyst thermal stress test is not required for engine families certified to the Phase 2 standards.

[60 FR 34598, July 3, 1995, as amended at 64 FR 15243, Mar. 30, 1999]

APPENDIX A TO SUBPART D OF PART 90—TABLES

TABLE 1—SYMBOLS USED IN SUBPART D

Symbol	Term	Unit
CO	Carbon monoxide.	
CO_2	Carbon dioxide.	
NO	Nitric oxide.	
NO_2	Nitrogen dioxide.	
NO_X	Oxides of nitrogen.	
O_2	Oxygen.	
conc	Concentration (ppm by volume)	ppm
f	Engine specific parameter considering atmospheric conditions.	
F_{FCB}	Fuel specific factor for the carbon balance calculation.	
F_{FD}	Fuel specific factor for exhaust flow calculation on dry basis.	
F_{FH}	Fuel specific factor representing the hydrogen to carbon ratio.	
F_{FW}	Fuel specific factor for exhaust flow calculation on wet basis.	
G_{AIRW}	Intake air mass flow rate on wet basis	kg/h
G_{AIRD}	Intake air mass flow rate on dry basis	kg/h
G_{EXHW}	Exhaust gas mass flow rate on wet basis	kg/h
G_{Fuel}	Fuel mass flow rate	kg/h
H	Absolute humidity (water content related to dry air)	gr/kg
i	Subscript denoting an individual mode.	
K_H	Humidity correction factor.	
L	Percent torque related to maximum torque for the test mode	percent

TABLE 1—SYMBOLS USED IN SUBPART D—Continued

Symbol	Term	Unit
mass	Pollutant mass flow	g/h
$n_{d,i}$	Engine speed (average at the i'th mode during the cycle)	1/min
P_s	Dry atmospheric pressure	kPa
P_d	Test ambient saturation vapor pressure at ambient temperature	kPa
P	Gross power output uncorrected	kW
P_{AUX}	Declared total power absorbed by auxiliaries fitted for the test	kW
P_M	Maximum power measured at the test speed under test conditions	kW
P_i	$P_i = P_{M,i} + P_{AUX,i}$.	
P_B	Total barometric pressure (average of the pre-test and post-test values)	kPa
R_a	Relative humidity of the ambient air	percent
T	Absolute temperature at air inlet	C
T_{be}	Air temperature after the charge air cooler (if applicable) (average)	C
T_{clout}	Coolant temperature outlet (average)	C
T_{Dd}	Absolute dew point temperature	C
$T_{d,i}$	Torque (average at the i'th mode during the cycle)	N-m
T_{SC}	Temperature of the intercooled air	C
$T_{ref.}$	Reference temperature	C
V_{EXHD}	Exhaust gas volume flow rate on dry basis	m^3/h
V_{AIRW}	Intake air volume flow rate on wet basis	m^3/h
P_B	Total barometric pressure	kPa
V_{EXHW}	Exhaust gas volume flow rate on wet basis	m^3/h
WF	Weighing factor.	
WF_E	Effective weighing factor.	

TABLE 2—MEASUREMENT CALIBRATION ACCURACY AND FREQUENCY

No.	Item	Permissible deviation from reading*		Calibration frequency
		Non-idle	Idle	
1	Engine speed	± 2 %	Same	Monthly or within one month prior to the certification test.
2	Torque	± 2 %		Monthly or within one month prior to the certification test.
3	Fuel consumption	± 2 %	±5%	Monthly or within one month prior to the certification test.
4	Air consumption	± 2 %	±5%	As required.
5	Coolant temperature	± 2 °C	Same	As required.
6	Lubricant temperature	± 2 °C	Same	As required.
7	Exhaust back pressure	± 5 %	Same	As required.
8	Inlet depression	± 5 %	Same	As required.
9	Exhaust gas temperature	± 15 °C	Same	As required.
10	Air inlet temperature (combustion air)	± 2 °C	Same	As required.
11	Atmospheric pressure	± 0.5 %	Same	As required.
12	Humidity (combustion air) (relative)	± 3.0 %	Same	As required.
13	Fuel temperature	± 2 °C	Same	As required.
14	Temperature with regard to dilution system.	± 2 °C	Same	As required.
15	Dilution air humidity	± 3 % absolute	Same	As required.
16	HC analyzer	± 2 %**	Same	Monthly or within one month prior to the certification test.
17	CO analyzer	± 2 %**	Same	Monthly or within one month prior to the certification test.
18	NO_X analyzer	± 2 %**	Same	Monthly or within one month prior to the certification test.
19	NO_X converter check	90 %	Same	Monthly or within one month prior to the certification test.
20	CO_2 analyzer	± 2 %**	Same	Monthly or within one month prior to the certification test.

*All accuracy requirements pertain to the final recorded value which is inclusive of the data acquisition system.
**If reading is under 100 ppm then the accuracy shall be ± 2 ppm.

TABLE 3—TEST FUEL SPECIFICATIONS

Item	Property	Tolerances	Procedure (ASTM)[1]
Sulfur, ppm max.	339		D 2622–92

TABLE 3—TEST FUEL SPECIFICATIONS—Continued

Item	Property	Tolerances	Procedure (ASTM) [1]
Benzene, max. %	1.5		D 3606–92
RVP, psi	8.7	±0.2	D 5191–93a
Octane, R+M/2	87.3	±0.5	D 2699–92 D 2700–92
IBP, °C	32.8	±11.0	D 86–93
10 % point, °C	53.3	±5.5	D 86–93
50 % point, °C	103.3	±5.5	D 86–93
90 % point, °C	165.6	±5.5	D 86–93
End Point, max. °C	212.8		D 86–93
Phosphorus, g/liter, max.	0.02		D 3231–89
Lead, g/liter, max.	0.02		
Manganese, g/liter, max.	0.004		
Aromatics, %	32.0	±4.0	D 1319–89
Olefins, %	9.2	±4.0	D 1319–89
Saturates, %	Remainder		D 1319–89

[1] All ASTM procedures in this table have been incorporated by reference. See § 90.7.

APPENDIX B TO SUBPART D OF PART 90—FIGURES

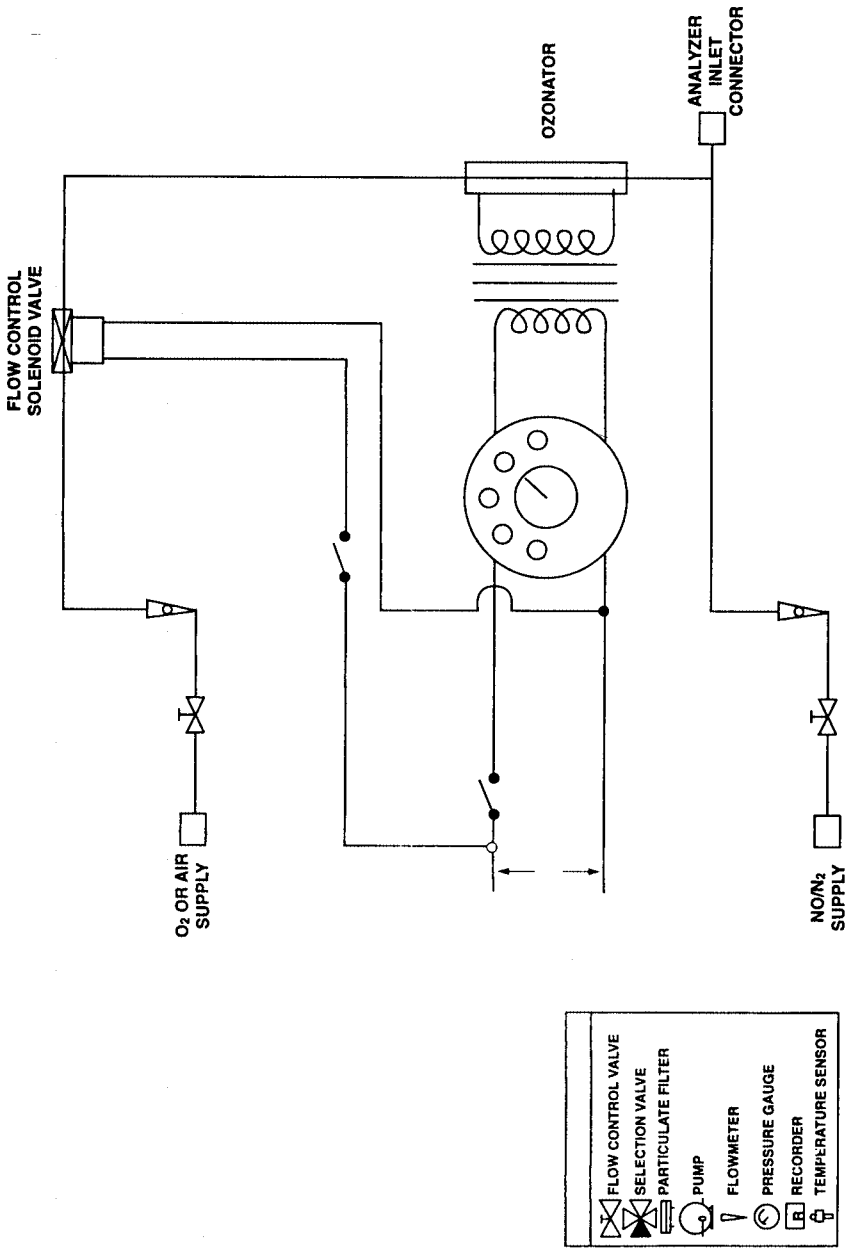

Figure 1. — NOx Converter Efficiency Detector

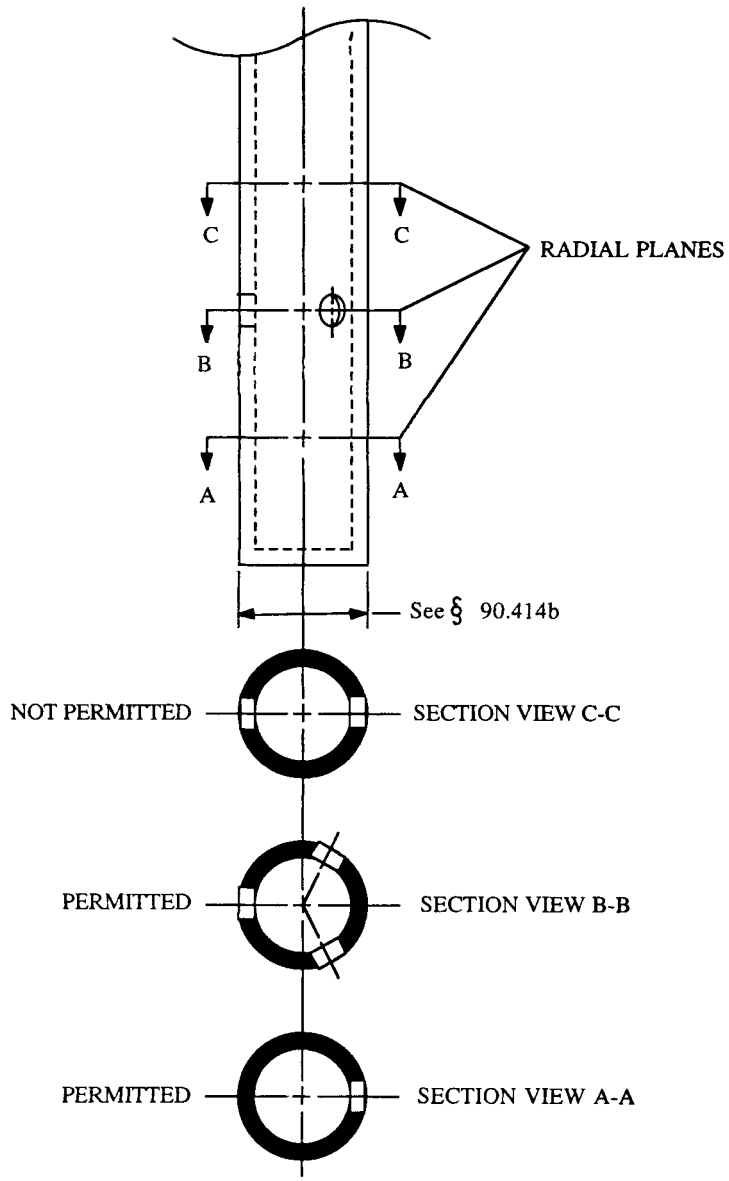

Figure 2.—Sample Probe and Typical Hole Spacings

Subpart E—Gaseous Exhaust Test Procedures

§ 90.401 Applicability.

(a) This subpart describes the procedures to follow in order to perform exhaust emission tests on new nonroad spark-ignition engines and vehicles subject to the provisions of subpart A of part 90. Provisions specific to raw gas sampling are in § 90.414 through § 90.419, provisions specific to constant volume sampling are in § 90.420 through § 90.426. All other sections in this subpart apply to both raw gas sampling and constant volume sampling except where indicated otherwise.

(b) Requirements for emission test equipment and calibrating this equipment are found in subpart D of this part.

(c) Certain text in this subpart is identified as pertaining to Phase 1 or Phase 2 engines. Such text pertains only to engines of the specified Phase. If no indication of Phase is given, the text pertains to all engines, regardless of Phase.

(d) For Phase 2 Class I, Phase 2 Class I–B, and Phase 2 Class II natural gas fueled engines, the following sections from 40 CFR Part 86 are applicable to this subpart. The requirements of the following sections from 40 CFR Part 86 which pertain specifically to the measurement and calculation of non-methane hydrocarbon (NMHC) exhaust emissions from otto cycle heavy-duty engines must be followed when determining the NMHC exhaust emissions from Phase 2 Class I, Phase 2 Class I–B, and Phase 2 Class II natural gas fueled engines. Those sections are: 40 CFR 86.1327–94 Engine dynamometer test procedures, overview, 40 CFR 86.1340–94 Exhaust sample analysis, 40 CFR 86.1342–94 Calculations; exhaust emissions, 40 CFR 86.1344–94(d) Required information—Pre-test data, and 40 CFR 86.1344–94(e) Required information—Test data.

[60 FR 34598, July 3, 1995, as amended at 64 FR 15244, Mar. 30, 1999; 65 FR 24312, Apr. 25, 2000]

§ 90.402 Definitions.

The definitions in § 90.3, § 90.101, and § 90.302 apply to this subpart.

§ 90.403 Symbols, acronyms, and abbreviations.

(a) The acronyms and abbreviations in § 90.5 apply to this subpart.

(b) The symbols in Table 1 in Appendix A to Subpart D apply to this subpart.

§ 90.404 Test procedure overview.

(a) The test consists of prescribed sequences of engine operating conditions to be conducted on an engine dynamometer or equivalent load and speed measurement device. The exhaust gases generated during engine operation are sampled either raw or dilute and specific components are analyzed through the analytical system.

(b) The test is designed to determine the brake-specific emissions of hydrocarbons, carbon monoxide, carbon dioxide, and oxides of nitrogen and fuel consumption. For Phase 2 Class I–B, Class I, and Class II natural gas fueled engines the test is also designed to determine the brake-specific emissions of non-methane hydrocarbons. The test consists of three different test cycles which are application specific for engines which span the typical operating range of nonroad spark-ignition engines. Two cycles exist for Class I–B, I and II engines and one is for Class I–A, III, IV, and V engines (see § 90.103(a) and § 90.116(b) for the definitions of Class I–A, I–B, and I—V engines). The test cycles for Class I–B, I, and II engines consist of one idle mode and five power modes at one speed (rated or intermediate). The test cycle for Class I–A, III, IV, and V engines consists of one idle mode at idle speed and one power mode at rated speed. These procedures require the determination of the concentration of each pollutant, fuel flow, and the power output during each mode. The measured values are weighted and used to calculate the grams of each pollutant emitted per brake kilowatt hour (g/kW-hr).

(c)(1) When an engine is tested for exhaust emissions the complete engine must be tested, with all emission control devices installed and functioning.

(2) On air cooled engines, the cooling fan must be installed. For engines whose cooling fan serves a dual purpose, such as an air pump/blower, an external fan may be used to provide the

engine with cooling air and the original cooling fan may be removed.

(d) All emission control systems installed on or incorporated in the application must be functioning during all procedures in this subpart. In case of component malfunction or failure, no maintenance is allowed without prior approval from the Administrator, in accordance with § 90.119.

[60 FR 34598, July 3, 1995, as amended at 64 FR 15244, Mar. 30, 1999; 65 FR 24312, Apr. 25, 2000]

§ 90.405 Recorded information.

(a) Record the information described in this section for each test, where applicable.

(b) *Test data; general.* (1) Engine identification number.

(2) Engine emission control system.

(3) Test operator(s).

(4) Number of hours of operation accumulated on the engine prior to beginning the warm-up portion of the test (to the nearest tenth hour).

(5) Fuel identification.

(6) For 2-stroke engines, fuel/oil mixture ratio.

(7) Date of most recent analyzer bench calibration.

(8) All pertinent instrument information such as tuning, gain, serial numbers, detector number, and calibration curve(s). As long as this information is traceable, it may be summarized by system number or analyzer identification numbers.

(c) *Test data; pre-test.* (1) Date and time of day.

(2) Test number.

(3) Barometric pressure; as an option, barometric pressure can be measured as a modal measurement instead of or in addition to a pre- and post-test measurement.

(4) Recorder chart or equivalent. Identify for each test segment zero traces for each range used, and span traces for each range used.

(d) *Test data; modal.* (1) Recorder chart or equivalent. Identify for each test mode the emission concentration traces and the associated analyzer range(s).

(2) Observed engine torque.

(3) Observed engine rpm.

(4) Intake air flow if applicable.

(5) Test cell temperature and humidity for each mode.

(6) For raw gas testing; fuel flow for each mode. Fuel flow measurement is not required for dilute testing, but is allowed. If the fuel flow measurement is a volume measurement system, record the fuel temperature in the measurement system for fuel density corrections to the mass flow rate. If the fuel temperature is within 3 °C of the calibration temperature, no density correction is required.

(7) Engine intake temperature and humidity, if applicable.

(8) Exhaust mixing chamber surface temperature, if applicable.

(9) Exhaust sample line temperature, if applicable.

(10) Engine fuel inlet pressure.

(e) *Test data; post-test.* (1) Recorder chart or equivalent. Identify the hang-up check.

(2) Recorder chart or equivalent. Identify the zero traces for each range used and the span traces for each range used.

(3) Total number of hours of operation accumulated on the engine (to the nearest tenth hour).

(4) Barometric pressure, post-test segment.

§ 90.406 Engine parameters to be measured and recorded.

Measure or calculate, then record the engine parameters in Table 1 in Appendix A of this subpart.

§ 90.407 Engine inlet and exhaust systems.

(a) The engine manufacturer is liable for exhaust emission compliance over the full range of air inlet filter systems and exhaust muffler systems.

(b) The air inlet filter system and exhaust muffler system combination used on the test engine must be the systems expected to yield the highest emission levels.

§ 90.408 Pre-test procedures.

(a) *Engine service accumulation and stabilization procedure.* Use the service accumulation procedure determined by the manufacturer for exhaust emission stabilizing of an engine, consistent with good engineering practice (see § 90.118).

(1) The manufacturer determines, for each engine family, the number of hours at which the engine exhaust emission control system combination is stabilized for emission testing. However, this stabilization procedure may not exceed 12 hours. The manufacturer must maintain, and provide to the Administrator upon request, a record of the rationale used in making this determination. If the manufactuer can document that at some time prior to the full 12 hour service accumulation period the engine emissions are decreasing for the remainder of the 12 hours, the service accumulation may be completed at that time. The manufacturer may elect to accumulate 12 hours on each test engine within an engine family without making this determination.

(2) During service accumulation, the fuel and lubricants specified in § 90.308 must be used.

(3) Engine maintenance during service accumulation is allowed only in accordance with § 90.118.

(b) *Engine pre-test preparation.* (1) Drain and charge the fuel tank(s) with the specified test fuel (see § 90.308(b)) to 50 percent of the tank's nominal capacity. If an external fuel tank is used, the engine fuel inlet system pressure must be typical of what the engine will see in use.

(2)(i) Operate the engine on the dynamometer measuring the fuel consumption (fuel consumption required only for raw gas sampling method) and torque before and after the emission sampling equipment is installed, including the sample probe, using the modes specified in the following table.

Engine class	Test cycle	Operating mode
(A) I, I–B, II	A	6
(B) I, I–B, II	B	1
(C) I–A, III, IV, V	C	1

(ii) These modes are from Table 2 in Appendix A of this subpart. The emission sampling equipment may not significantly affect the operational characteristics of the engine (typically the results should agree within five percent).

(c) *Analyzer pre-test procedures.* (1) If necessary, warm up and stabilize the analyzer(s) before calibrations are performed.

(2) Replace or clean the filter elements and then leak check the system as required by § 90.324(a). If necessary, allow the heated sample line, filters, and pumps to reach operating temperature.

(3) Perform the following system checks:

(i) If necessary, check the sample-line temperature. Heated FID sample line temperature must be maintained between 110 °C and 230 °C; a heated NO_X sample line temperature must be maintained between 60 °C and 230 °C.

(ii) Check that the system response time has been accounted for prior to sample collection data recording.

(iii) A HC hang-up check is permitted (see § 90.413(e)).

(4) Check analyzer zero and span before and after each test at a minimum. Further, check analyzer zero and span any time a range change is made or at the maximum demonstrated time span for stability for each analyzer used.

(d) Check system flow rates and pressures and reset, if necessary.

[60 FR 34598, July 3, 1995, as amended at 65 FR 24312, Apr. 25, 2000]

§ 90.409 Engine dynamometer test run.

(a) *Engine and dynamometer start-up.* (1) Only adjustments in accordance with § 90.119 may be made to the test engine prior to starting a test.

(2) If necessary, warm up the dynamometer as recommended by the dynamometer manufacturer or use good engineering practice.

(3) For Phase 1 engines, at the manufacturer's option, the engine can be run with the throttle in a fixed position or by using the engine's governor (if the engine is manufactured with a governor). In either case, the engine speed and load must meet the requirements specified in paragraph (b)(12) of this section. For Phase 2 Class I, Phase 2 Class I–B, and Phase 2 Class II engines equipped with an engine speed governor, the governor must be used to control engine speed during all test cycle modes except for Mode 1 or Mode 6, and no external throttle control may

be used that interferes with the function of the engine's governor; a controller may be used to adjust the governor setting for the desired engine speed in Modes 2–5 or Modes 7–10; and during Mode 1 or Mode 6 fixed throttle operation may be used to determine the 100 percent torque value.

(b) Each test consists of the following steps.

(1) Record the general test data as specified in § 90.405(b).

(2) Precondition the engine in the following manner;

(i) Operate the engine at a power greater than or equal to 50 percent maximum power at the appropriate speed (rated or intermediate) for 20 minutes;

(ii) Option. If the engine has been operating on service accumulation for a minimum of 40 minutes, the service accumulation may be substituted for step (i).

(3) Record all pre-test data specified in § 90.405(c).

(4) Start the test cycle (see § 90.410) within five minutes of the completion of the steps required by paragraph (b)(2) of this section.

(5) Modes are to be performed in the numerical order specified for the appropriate test cycle (see ''Mode Points'' Table 2 in Appendix A of this subpart).

(6) For Class I, I–B, and II engines, during the maximum torque mode calculate the torque corresponding to 75, 50, 25, and 10 percent of the maximum observed torque (see Table 2 in Appendix A to this subpart).

(7) Once engine speed and load are set for a mode, run the engine for a sufficient period of time to achieve thermal stability. At the manufacturer's option, determine and document the appropriate criterion for thermal stability for each engine family. If the manufacture chooses not to make this determination, an acceptable alternative is to run the engine at each mode until the cylinder head temperature remains within a 10 °C bandwidth for three minutes. Cylinder head temperature may be measured at the base of the spark plug. After stability is achieved, emission measurements are initiated.

(8) Record all modal data specified in § 90.405(d) for a minimum time period of the last two minutes of each mode. Longer averaging periods are acceptable, but the data averaged must be from a continuous time period. The duration of time during which this data is recorded is referred to as the ''sampling period.'' The data collected during the sampling period is used for modal emission calculations.

(9) Continuously record the analyzer's response to the exhaust gas during each mode.

(10) Modes may be repeated.

(11) If a delay of more than one hour occurs between the end of one mode and the beginning of another mode, the test is void and must be restarted at paragraph (b)(1) of this section.

(12) The engine speed and load must be maintained within the requirements of § 90.410 during the sampling period of each mode. If this requirement is not met, the mode is void and must be restarted.

(13) If at any time during a mode the test equipment malfunctions or the specifications in § 90.410 can not be met, the test is void and must be aborted. Corrective action should be taken and the test restarted.

(14) If at any time during an operating mode the engine stalls, restart the engine immediately and continue the test starting with the steps required by paragraph (b)(6) of this section. If the engine will not restart within five minutes the test is void. If maintenance is required on the engine, advance approval from the Administrator is required as specified in § 90.119. After corrective action is taken, the engine may be rescheduled for testing. Report the reason for the malfunction (if determined) and the corrective action taken.

(15) Fuel flow and air flow during the idle condition may be determined just prior to or immediately following the dynamometer sequence, if longer times are required for accurate measurements. If the dilute sampling method (Constant Volume Sampling) is used, neither fuel flow nor air flow measurements are required.

(c) *Exhaust gas measurements.* (1) Measure HC, CO, CO_2, and NO_X concentration in the exhaust sample.

(2) Each analyzer range that may be used during a test mode must have the

zero and span responses recorded prior to the start of the test. Only the range(s) used to measure the emissions during the test is required to have its zero and span recorded after the completion of the test. Depending on the stability of each individual analyzer, more frequent zero checks or spans between modes may be necessary.

(3) It is permitted to change filter elements between modes.

(4) A leak check is permitted between modes.

(5) A hang-up check is permitted between modes (see § 90.413).

(6) If, during the emission measurement portion of a mode, the value of the gauges downstream of the NDIR analyzer(s) G3 or G4 (see Figure 2 in Appendix B of Subpart D), differs by more than ±0.5kPa from the pretest value, the test mode is void.

[60 FR 34598, July 3, 1995, as amended at 64 FR 15244, Mar. 30, 1999; 65 FR 24313, Apr. 25, 2000]

§ 90.410 Engine test cycle.

(a) Follow the appropriate 6-mode test cycle for Class I, I–B and II engines and 2-mode test cycle for Class I–A, III, IV, and V engines when testing spark-ignition engines (see Table 2 in Appendix A of this subpart).

(b) For Phase 1 engines and Phase 2 Class I–A, III, IV, and V, and Phase 2 Class I and II engines not equipped with an engine speed governor, during each non-idle mode, hold both the specified speed and load within ± five percent of point. During the idle mode, hold speed within ± ten percent of the manufacturer's specified idle engine speed. For Phase 2 Class I, I–B, and II engines equipped with an engine speed governor, during Mode 1 or Mode 6 hold both the specified speed and load within ± five percent of point, during Modes 2–3, or Modes 7–8 hold the specified load with ± five percent of point, during Modes 4–5 or Modes 9–10, hold the specified load within the larger range provided by +/−0.27 Nm (+/−0.2 lb-ft), or +/−ten (10) percent of point, and during the idle mode hold the specified speed within ± ten percent of the manufacturer's specified idle engine speed (see Table 1 in Appendix A of this subpart for a description of test Modes). The use of alternative test procedures is allowed if approved in advance by the Administrator.

(c) If the operating conditions specified in paragraph (b) of this section for Class I, I–B, and II engines using Mode Points 2, 3, 4, and 5 cannot be maintained, the Administrator may authorize deviations from the specified load conditions. Such deviations may not exceed 10 percent of the maximum torque at the test speed. The minimum deviations, above and below the specified load, necessary for stable operation shall be determined by the manufacturer and approved by the Administrator prior to the test run.

(d) Do not include power generated during the idle mode, Mode 11, in the calculation of emission results.

[60 FR 34598, July 3, 1995, as amended at 64 FR 15244, Mar. 30, 1999; 65 FR 24313, Apr. 25, 2000]

§ 90.411 Post-test analyzer procedures.

(a) Perform a HC hang-up check within 60 seconds of the completion of the last mode in the test. Use the following procedure:

(1) Introduce a zero gas or room air into the sample probe or valve V2 (see Figure 2 in Appendix B of Subpart D) to check the ''hangup zero'' response. Simultaneously start a time measurement.

(2) Select the lowest HC range used during the test.

(3) Within four minutes of beginning the time measurement in paragraph (a)(1) of this section, the difference between the zero gas response and the hang-up zero response may not be greater than 5.0 percent of full scale or 10 ppmC, whichever is greater.

(b) Begin the analyzer span checks within six minutes after the completion of the last mode in the test. Record for each analyzer the zero and span response for each range used during the preceding test or test segment.

(c) If during the test, the filter element(s) were replaced or cleaned, a vacuum check must be performed per § 90.324(a) immediately after the span checks. If the vacuum side leak check does not meet the requirements of § 90.324(a), the test is void.

(d) Read and record the post-test data specified in § 90.405(e).

(e) For a valid test, the analyzer drift between the before-segment and after-segment span checks for each analyzer must meet the following requirements:

(1) The span drift (defined as the change in the difference between the zero response and the span response) may not exceed two percent of full-scale chart deflection for each range used.

(2) The zero response drift may not exceed two percent of full-scale chart deflection for each range used above 155 ppm (or ppm C), or three percent of full-scale chart deflection for each range below 155 ppm (or ppm C).

§ 90.412 Data logging.

(a) A computer or any other automatic data collection (ADC) device(s) may be used as long as the system meets the requirements of this subpart.

(b) Determine from the data collection records the analyzer responses corresponding to the end of each mode.

(c) Record data at a minimum of rate of one Hz (one time per second).

(d) Determine the final value for power by averaging the individually calculated power points for each value of speed and torque recorded during the sampling period. As an alternative, the final value for power can be calculated from the average values for speed and torque, collected during the sampling period.

(e) Determine the final value for CO_2, CO, HC, and NO_X concentrations by averaging the concentration of each point taken during the sample period for each mode.

§ 90.413 Exhaust sample procedure—gaseous components.

(a) *Automatic data collection equipment requirements.* The analyzer response may be read by automatic data collection (ADC) equipment such as computers, data loggers, and so forth. If ADC equipment is used, the following is required:

(1) For dilute grab (''bag'') sample analysis, the analyzer response must be stable at greater than 99 percent of the final reading for the dilute exhaust sample. The ADC must store a single value representing the average chart deflection over a 10-second stabilized period. Alternatively, the ADC may store the individual instantaneous chart deflections collected over a 10-second stabilized period.

(2) For continuous analysis systems, the ADC must store a single value representing the average integrated concentration over a measurement period. Alternatively, the ADC may store the individual instantaneous values collected during the measurement period.

(3) The chart deflections or average integrated concentrations required in paragraphs (a)(1) and (a)(2) of this section may be stored on long-term computer storage devices such as computer tapes, storage discs, punch cards, or they may be printed in a listing for storage. In either case a chart recorder is not required and records from a chart recorder, if they exist, need not be stored.

(4) If ADC equipment is used to interpret analyzer values, the ADC equipment is subject to the calibration specifications of the analyzer as if the ADC equipment is part of analyzer system.

(b) Data records from any one or a combination of analyzers may be stored as chart recorder records.

(c) *Grab sample analysis.* For dilute grab sample analysis perform the following procedure:

(1) Calibrate analyzers using the procedure described in § 90.326.

(2) Record the most recent zero and span response as the pre-analysis values.

(3) Measure and record HC, CO, CO_2, and NO_X concentrations in the exhaust sample bag(s) and background sample bag(s) using the same flow rates and pressures.

(4) Good engineering practice dictates that exhaust emission sample bag analyzer readings below 15 percent of full scale should generally not be used.

(5) A post-analysis zero and span calibration check of each range must be performed and the values recorded. The number of events that may occur between the pre- and post-checks is not specified. However, the difference between pre-analysis zero and span values (recorded in paragraph (c)(2) or (c)(3) of this section) versus those recorded for the post-analysis check may not exceed the zero drift limit or the span drift limit of two percent of full-

scale chart deflection for any range used. Otherwise the analysis is void.

(d) *Continuous sample analysis.* For continuous sample analysis perform the following procedure:

(1) Calibrate analyzers using the procedure described in § 90.326.

(2) Leak check portions of the sampling system that operate at negative gauge pressures when sampling and allow heated sample lines, filters, pumps, and so forth to stabilize at operating temperature.

(3) Option: Determine the HC hang-up for the FID or HFID sampling system:

(i) Zero the analyzer using zero gas introduced at the analyzer port.

(ii) Flow zero gas through the overflow sampling system. Check the analyzer response.

(iii) If the overflow zero response exceeds the analyzer zero response by two percent or more of the FID or HFID full-scale deflection, hang-up is indicated and corrective action must be taken (see paragraph (e) of this section).

(iv) The complete system hang-up check specified in paragraph (e) of this section is recommended as a periodic check.

(4) If necessary, recalibrate analyzer using the procedure specified in paragraph (d)(1) of this section.

(5) Good engineering practice dictates that analyzers used for continuous analysis should be operated such that the measured concentration falls between 15 percent and 100 percent of full scale.

(6) Record the most recent zero and span response as the pre-analysis values.

(7) Collect background HC, CO, CO_2, and NO_X in a sample bag (for dilute exhaust sampling only, see § 90.422).

(8) Perform a post-analysis zero and span check for each range used at the conditions specified in paragraph (d)(1) of this section. Record these responses as the post-analysis values.

(9) Neither the zero drift nor the span drift between the pre-analysis and post-analysis checks on any range used may exceed three percent for HC, or two percent for NO_X, CO, and CO_2, of full-scale chart deflection, or the test is void. (If the HC drift is greater than three percent of full-scale chart deflection, HC hang-up is likely.)

(10) Determine background levels of HC, NO_X, CO, or CO_2 (for dilute exhaust sampling only) by the grab (''bag'') technique outlined in paragraph (c) of this section.

(e) *Hydrocarbon hang-up.* If HC hang-up is indicated, the following procedure may be performed:

(1) Fill a clean, evacuated sample bag with background air.

(2) Zero and span the HFID at the analyzer ports.

(3) Analyze the background air sample bag through the analyzer ports.

(4) Analyze the background air through the entire sample probe system.

(5) If the difference between the readings obtained is two ppm or more, clean the sample probe and the sample line.

(6) Reassemble the sample system, heat to specified temperature, and repeat the procedure in paragraphs (e)(1) through (e)(5) of this section.

§ 90.414 Raw gaseous exhaust sampling and analytical system description.

(a) *Schematic drawing.* An example of a sampling and analytical system which may be used for testing under this subpart is shown in Figure 2 in Appendix B of Subpart D. All components or parts of components that are wetted by the sample or corrosive calibration gases must be either chemically cleaned stainless steel or inert material (e.g., polytetrafluoroethylene resin). The use of ''gauge savers'' or ''protectors'' with nonreactive diaphragms to reduce dead volumes is permitted.

(b) *Sample probe.* (1) The sample probe must be a straight, closed end, stainless steel, multi-hole probe. The inside diameter may not be greater than the inside diameter of the sample line +0.03 cm. The wall thickness of the probe may not be greater than 0.10 cm. The fitting that attaches the probe to the exhaust pipe must be as small as practical in order to minimize heat loss from the probe.

(2) The probe must have a minimum of three holes. The spacing of the radial planes for each hole in the probe

must be such that they cover approximately equal cross-sectional areas of the exhaust duct. See Figure 2 in Appendix B of Subpart D. The angular spacing of the holes must be approximately equal. The angular spacing of any two holes in one plane may not be 180° ± 20° (i.e., section view C–C of Figure 2 in Appendix B of Subpart D). The holes should be sized such that each has approximately the same flow. If only three holes are used, they may not all be in the same radial plane.

(3) The exhaust gas probe must be located in a position which yields a well mixed, homogenous sample of the engine exhaust. The probe must extend radially across the exhaust gas stream. The probe must pass through the approximate center and must extend across at least 80 percent of the exhaust gas stream. The exact position of the probe may vary from engine family to engine family.

(c) *Mixing chamber*. The exhaust mixing chamber is located in the exhaust system between the muffler and the sample probe. The mixing chamber is an optional component of the raw gas sampling equipment.

(1) The internal volume of the mixing chamber may not be less than ten times the cylinder displacement of the engine under test. The shape of the mixing chamber must be such that it provides a well mixed, homogenous sample at the sample probe location.

(2) Couple the mixing chamber as closely as possible to the engine muffler.

(3) Maintain the inner surface of the mixing chamber at a minimum temperature of 179 °C.

(4) Thermocouple temperature monitoring of the mixing chamber inner surface is required to assure wall temperatures specified in paragraph (c)(3) of this section. The temperature measurement must be accurate to within ± 5 °C.

(5) The sample probe must extend radially across the exit of the mixing chamber. The probe must pass through the approximate center and must extend across at least 80 percent of the diameter of the exit. The exact position of the probe may vary from engine family to engine family. The probe must be located in a position which yields a well mixed, homogenous sample of the exhaust.

(d) *Sample transfer line*. (1) The maximum inside diameter of the sample line may not exceed 1.32 cm.

(2) If valve V2 in Figure 1 of Appendix B of this subpart is used, the sample probe must connect directly to valve V2. The location of optional valve V2 in Figure 1 of Appendix B of Subpart D may not be greater than 1.22 m from the exhaust duct.

(3) The location of optional valve V16, Figure 1 of Appendix B of this subpart, may not be greater than 61 cm from the sample pump. The leakage rate for this section on the pressure side of the sample pump may not exceed the leakage rate specification for the vacuum side of the pump.

(e) *Venting*. All vents, including analyzer vents, bypass flow, and pressure relief vents, of regulators should be vented in such a manner as to avoid endangering personnel in the immediate area.

(f) Any variation from the specifications in this subpart, including performance specifications and emission detection methods, may be used only with prior approval by the Administrator.

(g) Additional components, such as instruments, valves, solenoids, pumps, switches, and so forth, may be employed to provide additional information and coordinate the functions of the component systems.

(h) The following requirements must be incorporated in each system used for raw testing under this subpart.

(1) Take the sample for all components with one sample probe and split it internally to the different analyzers.

(2) Heat the sample transport system from the engine exhaust pipe to the HC analyzer for the raw gas sampling method as indicated in Figure 1 in Appendix B of this subpart. The NO_X analyzer for the raw gas sampling method may be heated as indicated in Figure 1 in Appendix B of this subpart. The HC analyzer and the NO_X analyzer for the dilute sampling method may be heated as indicated in Figure 1 in Appendix B of this subpart.

§ 90.415 Raw gaseous sampling procedures.

Fit all heated sampling lines with a heated filter to extract solid particles from the flow of gas required for analysis. The sample line for HC measurement must be heated. The sample line for CO, CO_2 and NO_X analysis may be heated or unheated.

§ 90.416 Intake air flow measurement specifications.

(a) If used, the engine intake air flow measurement method used must have a range large enough to accurately measure the air flow over the engine operating range during the test. Overall measurement accuracy must be two percent of full-scale value of the measurement device for all modes except the idle mode. For the idle mode, the measurement accuracy must be ±five percent or less of the full-scale value. The Administrator must be advised of the method used prior to testing.

(b) When an engine system incorporates devices that affect the air flow measurement (such as air bleeds, air injection, pulsed air, and so forth) resulting in understated exhaust emission results, make corrections to the exhaust emission results to account for such effects.

§ 90.417 Fuel flow measurement specifications.

(a) Fuel flow measurement is required only for raw testing. Fuel flow is allowed for dilute testing. If the measured fuel flow is used in the dilute calculations for brake-specific fuel consumption (see § 90.426(e)), the fuel flow instrument must meet the requirements of this section.

(b) The fuel flow measurement instrument must have a minimum accuracy of one percent of full-scale flow rate for each measurement range used. An exception is allowed for the idle mode. For this mode, the minimum accuracy is ± five percent of full-scale flow rate for the measurement range used. The controlling parameters are the elapsed time measurement of the event and the weight or volume measurement.

§ 90.418 Data evaluation for gaseous emissions.

For the evaluation of the gaseous emissions recording, record the last four minutes of each mode and determine the average values for HC, CO, CO_2 and NO_X during each mode from the average concentration readings determined from the corresponding calibration data. Longer averaging times are acceptable, but the sampling period which is reported must be a continuous set of data.

§ 90.419 Raw emission sampling calculations—gasoline fueled engines.

(a) Derive the final weighted brake-specific mass emission rates (g/kW–hr) through the steps described in this section.

(b) *Air and fuel flow method.* If both air and fuel flow mass rates are measured, use the following equations to determine the weighted emission values for the test engine:

$$W_{NO_X} = \left(G_{AIRD} + G_{FUEL}\right) \times \frac{M_{NO_2}}{M_{exh}} \times WNO_X \times K_H \times \frac{1}{10^6}$$

$$W_{HC} = \left(G_{AIRD} + G_{FUEL}\right) \times \frac{M_{HC_{exh}}}{M_{exh}} \times WHC \times \frac{1}{10^6}$$

$$W_{CO} = \left(G_{AIRD} + G_{FUEL}\right) \times \frac{M_{CO}}{M_{exh}} \times WCO \times \frac{1}{10^2}$$

Where:

W_{HC} = Mass rate of HC in exhaust [g/hr],

G_{AIRD} = Intake air mass flow rate on dry basis [g/hr],
G_{FUEL} = Fuel mass flow rate [g/hr],
M_{HCexh} = Molecular weight of hydrocarbons in the exhaust, see the following equation:

$$M_{HC_{exh}} = 12.01 + \alpha 1.008 + \beta 16.00$$

Where:
α = Hydrogen/carbon atomic ratio of the fuel
β = Oxygen/carbon atomic ratio of the fuel
M_{exh} = Molecular weight of the total exhaust, see the following equation:

$$M_{exh} = \frac{M_{HC_{exh}} \times WHC}{10^6} + \frac{28.01 \times WCO}{10^2} + \frac{44.01 \times WCO_2}{10^2} + \frac{46.01 \times WNO_X}{10^6} + \frac{32.00 \times WO_2}{10^2} + \frac{2.016 \times WH_2}{10^2} + 18.01 \times (1 - K) + \frac{28.01 \times \left[100 - \frac{WHC}{10^4} - WCO - WCO_2 - \frac{WNO_X}{10^4} - WO_2 - WH_2 - 100 \times (1 - K)\right]}{10^2}$$

Where:
WHC = HC volume concentration in exhaust, ppmC wet
WCO = CO percent concentration in the exhaust, wet
DCO = CO percent concentration in the exhaust, dry
WCO_2 = CO_2 percent concentration in the exhaust, wet
DCO_2 = CO_2 percent concentration in the exhaust, dry
WNO_X = NO volume concentration in exhaust, ppm wet
WO_2 = O_2 percent concentration in the exhaust, wet
WH_2 = H_2 percent concentration in exhaust, wet
K = correction factor to be used when converting dry measurements to a wet basis. Therefore, wet concentration=dry concentration $\times$ K,
where K is:

$$K = \frac{1}{1 + 0.005 \times (DCO + DCO_2) \times \alpha - 0.01 DH_2}$$

DH_2 = H_2 percent concentration in exhaust, dry, calculated from the following equation:

$$DH_2 = \frac{0.5 \times \alpha \times DCO \times (DCO + DCO_2)}{DCO + (3 \times DCO_2)}$$

W_{co} = Mass rate of CO in exhaust, [g/hr]
M_{co} = Molecular weight of CO=28.01
W_{NOx} = Mass rate of NO_X in exhaust, [g/hr]
M_{NO2} = Molecular weight of NO_2=46.01
K_H = Factor for correcting the effects of humidity on NO_2 formation for 4-stroke gasoline small engines, see the equation below:

$$K_H = \frac{1}{1 - 0.0329(H - 10.71)}$$

Where:
H = absolute humidity of the intake air in grams of moisture per kilogram of dry air, see §90.426(f) for a method by which H can be calculated.

For two-stroke gasoline engines, K_H should be set to 1.

(c) *Fuel flow method.* The following equations are to be used when fuel flow is selected as the basis for mass emission calculations using the raw gas method.

$$W_{HC} = \frac{M_{HC_{exh}}}{M_F} \times \frac{G_{FUEL}}{TC} \times \frac{WHC}{10^4}$$

$$W_{CO} = \frac{M_{CO}}{M_F} \times \frac{G_{FUEL}}{TC} \times WCO$$

$$W_{NO_X} = \frac{M_{NO_X}}{M_F} \times \frac{G_{FUEL}}{TC} \times \frac{WNO_X}{10^4} \times K_H$$

Where:

W_{HC} = Mass rate of HC in exhaust, [g/hr]

M_{HCexh} = Molecular weight of hydrocarbons in the exhaust, see following equation:

$$M_{HC_{exh}} = M_C + \alpha M_H + \beta M_O$$

M_C = Molecular weight of carbon=12.01 [g/mole]

M_H = Molecular weight of hydrogen=1.008 [g/mole]

M_O = Molecular weight of oxygen=16.00 [g/mole]

α = Hydrogen to carbon ratio of the test fuel

β = Oxygen to carbon ratio of the test fuel

M_F = Molecular weight of test fuel

G_{FUEL} = Fuel mass flow rate, [g/hr]

TC=Total carbon in exhaust, see following equation:

$$TC = WCO + WCO_2 + \frac{WHC}{10^4}$$

WCO = CO percent concentration in the exhaust, wet

WCO_2 = CO_2 percent concentration in the exhaust, wet

DCO = CO percent concentration in the exhaust, dry

DCO_2 = CO_2 percent concentration in the exhaust, dry

WHC = HC volume concentration in exhaust, ppmC wet

WNO_X = NO_X volume concentration in exhaust, ppm wet

K = correction factor to be used when converting dry measurements to a wet basis. Therefore, wet concentration=dry concentration x K, where K is:

$$K = \frac{1}{1 + 0.005 \times (DCO + DCO_2) \times \alpha - 0.01\, DH_2}$$

DH_2 = H_2 percent concentration in exhaust, dry, calculated from the following equation:

$$DH_2 = \frac{0.5 \times \alpha \times DCO \times (DCO + DCO_2)}{DCO + (3 \times DCO_2)}$$

W_{CO} = Mass rate of CO in exhaust, [g/hr]

M_{CO} = Molecular weight of CO = 28.01

WNO_X = Mass rate of NO_X in exhaust, [g/hr]

MNO_2 = Molecular weight of NO_2=46.01

K_H = Factor for correcting the effects of humidity on NO_2 formation for 4-stroke gasoline small engines, see the following equation:

$$K_H = \frac{1}{1 - 0.0329(H - 10.71)}$$

Where:

H = specific humidity of the intake air in grams of moisture per kilogram of dry air.

For two-stroke gasoline engines, K_H should be set to 1.

(d) Calculate the final weighted brake-specific emission rate for each individual gas component using the following equation:

$$A_{WM} = \frac{\sum_i^n (W_i \times WF_i)}{\sum_i^n (P_i \times WF_i)}$$

Where:

A_{WM} = Final weighted brake-specific mass emission rate (HC, CO, NO_X) [g/kW-hr]

W_i = Mass emission rate during mode i [g/hr]

WF_i = Weighting factors for each mode according to § 90.410(a)

P_i = Gross average power generated during mode i [kW], calculated from the following equation,

$$P_i \frac{2\pi}{60{,}000} \times \text{speed} \times \text{torque}$$

Where:

speed = average engine speed measured during mode i [rev./minute]

torque = average engine torque measured during mode i [N-m] (e) Compute the final reported brake-specific fuel consumption (BSFC) by use of the following formula:

$$BSFC = \frac{\sum_{i}^{n} \left(G_{FUEL_i} \times WF_i \right)}{\sum_{i}^{n} \left(P_i \times F_i \right)}$$

Where:

BSFC = brake-specific fuel consumption in grams of fuel per kilowatt-hour (g/kW-hr).

G_{FUELi} = Fuel mass flow rate of the engine during mode i [g/hr]

WF_i = Weighting factors for each mode according to § 90.410(a)

P_i = Gross average power generated during mode i [kW].

§ 90.420 CVS concept of exhaust gas sampling system.

(a) A dilute exhaust sampling system is designed to directly measure the true mass of emissions in engine exhaust without the necessity of measuring either fuel flow or intake air flow. This is accomplished by diluting the exhaust produced by a test engine with ambient background air and measuring the total diluted exhaust flow rate and the concentration of emissions within the dilute flow. Total mass flow of an emission is then easily calculated.

(b) A constant volume sampler (CVS) is typically used to control the total amount of dilute flow through the system. As the name implies, a CVS restricts flow to a known value dependent only on the dilute exhaust temperature and pressure.

(c) For the testing described in this subpart, a CVS must consist of: a mixing tunnel into which the engine exhaust and dilutant (background) air are dumped; a dilute exhaust flow metering system; a dilute exhaust sample port; a background sample port; a dilute exhaust sampling system; and a background sampling system.

(1) *Mixing tunnel.* The mixing tunnel must be constructed such that complete mixing of the engine exhaust and background air is assured prior to the sampling probe.

(2) *Exhaust flow metering system.* A dilute exhaust flow metering system must be used to control the total flow rate of the dilute engine exhaust as described in § 90.421.

(3) *Exhaust sample port.* A dilute exhaust sample port must be located in or downstream of the mixing tunnel at a point where complete mixing of the engine exhaust and background air is assured.

(4) *Background sample port.* A dilute exhaust sample port must be located in the stream of background air before it is mixed with the engine exhaust. The background probe must draw a representative sample of the background air during each sampling mode.

(5) *Exhaust sampling system.* The dilute exhaust sampling system controls the flow of samples from the mixing tunnel to the analyzer system. This could be either a continuous sampling system or grab (bag) sampling system. If a critical flow venturi (CFV) is used on the dilute exhaust sample probe, this system must assure that the sample CFV is in choke flow during testing. If no CFV is used, this system must assure a constant volumetric flow rate through the dilute exhaust sample probe or must incorporate electronic flow compensation.

(6) *Background sampling system.* The background sampling system controls the flow of samples from the background air supply to the analyzer system. This could be either a continuous sampling system or grab (bag) sampling system. This system must assure a constant volumetric flow rate through the background sample probe.

§ 90.421 Dilute gaseous exhaust sampling and analytical system description.

(a) *General.* The exhaust gas sampling system described in this section is designed to measure the true mass of gaseous emissions in the exhaust of nonroad small spark-ignition engines. This system utilizes the Constant Volume Sampling (CVS) concept (described in § 90.420) of measuring mass emissions of HC, NO_X, CO, and CO_2. Grab sampling for individual modes is an acceptable method of dilute testing for all constituents, HC, NO_X, CO, and CO_2. Continuous dilute sampling is not required for any of the exhaust constituents, but is allowable for all. Heated sampling is not required for any of the constituents, but is allowable for HC and NO_X. The mass of gaseous emissions is determined from the sample concentration and total flow over the

test period. As an option, the measurement of total fuel mass consumed over a cycle may be substituted for the exhaust measurement of CO_2. General requirements are as follows:

(1) This sampling system requires the use of a Positive Displacement Pump—Constant Volume Sampler (PDP–CVS) system with a heat exchanger, or a Critical Flow Venturi—Constant Volume Sampler (CFV–CVS) system with CFV sample probes and/or a heat exchanger or electronic flow compensation. Figure 2 in Appendix B of this subpart is a schematic drawing of the PDP–CVS system. Figure 3 in Appendix B of this subpart is a schematic drawing of the CFV–CVS system.

(2) The HC analytical system requires:

(i) Grab sampling (see § 90.420, and Figure 2 or Figure 3 in Appendix B of this subpart) and analytical capabilities (see § 90.423, and Figure 4 in Appendix B of this subpart), or

(ii) Continuously integrated measurement of diluted HC meeting the minimum requirements and technical specifications contained in paragraph (b)(2) of this section.

(iii) The dilute HC analytical system for nonroad small spark-ignition engines does not require a heated flame ionization detector (HFID).

(iv) If used, the HFID sample must be taken directly from the diluted exhaust stream through a heated probe and integrated continuously over the test cycle.

(v) The heated probe must be located in the sampling system far enough downstream of the mixing area to ensure a uniform sample distribution across the CVS duct at the sampling zone.

(3) The CO and CO_2 analytical system requires:

(i) Grab sampling (see § 90.420, and Figure 2 or Figure 3 in Appendix B of this subpart) and analytical capabilities (see § 90.423, and Figure 4 in Appendix B of this subpart), or

(ii) Continuously integrated measurement of diluted CO and CO_2 meeting the minimum requirements and technical specifications contained in paragraph (b)(4) of this section.

(4) The NO_X analytical system requires:

(i) Grab sampling (see § 90.420, and Figure 2 or Figure 3 in Appendix B of this subpart) and analytical capabilities (see § 90.423, and Figure 4 in Appendix B of this subpart), or

(ii) A continuously integrated measurement of diluted NO_X meeting the minimum requirements and technical specifications contained in paragraph (b)(4) of this section.

(5) Since various configurations can produce equivalent results, exact conformance with these drawings is not required. Additional components such as instruments, valves, solenoids, pumps, and switches may be used to provide additional information and coordinate the functions of the component systems. Other components, such as snubbers, which are not needed to maintain accuracy on some systems, may be excluded if their exclusion is based upon good engineering judgment.

(6) Other sampling and/or analytical systems may be used if shown to yield equivalent results and if approved in advance by the Administrator.

(b) *Component description*. The components necessary for exhaust 0sampling must meet the following requirements:

(1) *Exhaust dilution system*. The PDP–CVS must conform to all of the requirements listed for the exhaust gas PDP–CVS in § 90.420 of this chapter. The CFV–CVS must conform to all of the requirements listed for the exhaust gas CFV–CVS in § 90.420 of this chapter. In addition, the CVS must conform to the following requirements:

(i) The flow capacity of the CVS must be sufficient to maintain the diluted exhaust stream in the dilution system at a temperature of 190 °C or less at the sampling zone for hydrocarbon measurement and as required to prevent condensation at any point in the dilution system. Gaseous emission samples may be taken directly from this sampling point.

(ii) For the CFV–CVS, either a heat exchanger or electronic flow compensation is required (see Figure 3 in Appendix B of this subpart).

(iii) For the CFV–CVS when a heat exchanger is used, the gas mixture temperature, measured at a point immediately ahead of the critical flow venturi, must be within ±11 °C of the

average operating temperature observed during the test with the simultaneous requirement that condensation does not occur. The temperature measuring system (sensors and readout) must have an accuracy and precision of ±2 °C. For systems utilizing a flow compensator to maintain proportional flow, the requirement for maintaining constant temperature is not necessary.

(2) *Continuous HC measurement system.* (i) The continuous HC sample system (as shown in Figure 2 or 3 in Appendix B of this subpart) uses an ''overflow'' zero and span system. In this type of system, excess zero or span gas spills out of the probe when zero and span checks of the analyzer are made.

(ii) No other analyzers may draw a sample from the continuous HC sample probe, line, or system, unless a common sample pump is used for all analyzers and the sample line system design reflects good engineering practice.

(iii) The overflow gas flow rates into the sample line must be at least 105 percent of the sample system flow rate.

(iv) The overflow gases must enter the sample line as close as practical to the outside surface of the CVS duct or dilution system.

(v) The continuous HC sampling system consists of a probe (which for a HFID analyzer must raise the sample to the specified temperature) and, where used, a sample transfer system (which for a HFID must maintain the specified temperature). The HFID continuous hydrocarbon sampling system (exclusive of the probe) must:

(A) Maintain a wall temperature of 190 ±11 °C as measured at every separately controlled heated component (that is, filters, heated line sections), using permanent thermocouples located at each of the separate components.

(B) Have a wall temperature of 190 ±11 °C over its entire length. The temperature of the system is demonstrated by profiling the thermal characteristics of the system where possible at initial installation and after any major maintenance performed on the system. The profiling is to be accomplished using the insertion thermocouple probing technique. The system temperature must be monitored continuously during testing at the locations and temperature described in § 90.421(b)(2).

(C) Maintain a gas temperature of 190 ±11 °C immediately before the heated filter and HFID. Determine these gas temperatures by a temperature sensor located immediately upstream of each component.

(vi) The continuous hydrocarbon sampling probe:

(A) Is defined as the first 25.4 to 76.2 cm of the continuous hydrocarbon sampling system.

(B) Has a 0.483 cm minimum inside diameter.

(C) Is installed in the dilution system at a point where the dilution air and exhaust are well mixed and provide a homogenous mixture.

(D) Is sufficiently distant (radially) from other probes and the system wall so as to be free from the influence of any wakes or eddies.

(E) For a continuous HFID sample probe, the probe must increases the gas stream temperature to 190 ±11 °C at the exit of the probe. Demonstrate the ability of the probe to accomplish this using the insertion thermocouple technique at initial installation and after any major maintenance. Demonstrate compliance with the temperature specification by continuously recording during each test the temperature of either the gas stream or the wall of the sample probe at its terminus.

(vii) The response time of the continuous measurement system must be taken into account when logging test data.

(3) *Sample mixing.* (i) Configure the dilution system to ensure a well mixed, homogeneous sample prior to the sampling probe(s).

(ii) Make the temperature of the diluted exhaust stream inside the dilution system sufficient to prevent water condensation.

(iii) Direct the engine exhaust downstream at the point where it is introduced into the dilution system.

(4) *Continuously integrated NO_X, CO, and CO_2 measurement systems*—(i) *Sample probe requirements:*

(A) The sample probe for continously intergrated NO_X, CO, and CO_2 must be in the same plane as the continuous HC probe, but sufficiently distant (radially) from other probes and the tunnel

wall so as to be free from the influences of any wakes or eddies.

(B) The sample probe for continously intergrated NO_X, CO, and CO_2 must be heated and insulated over the entire length, to prevent water condensation, to a minimum temperature of 55 °C. Sample gas temperature immediately before the first filter in the system must be at least 55 °C.

(ii) Conform to the continuous NO_X, CO, or CO_2 sampling and analysis system to the specifications of part 86, subpart D of this chapter with the following exceptions and revisions:

(A) Heat the system components requiring heating only to prevent water condensation, the minimum component temperature is 55 °C.

(B) Coordinate analysis system response time with CVS flow fluctuations and sampling time/test cycle offsets, if necessary.

(C) Use only analytical gases conforming to the specifications of § 90.312 of this subpart for calibration, zero and span checks.

(D) Use a calibration curve conforming to § 90.321 for CO and CO_2 and § 90.318 for NO_X for any range on a linear analyzer below 155 ppm.

(iii) Convert the chart deflections or voltage output of analyzers with nonlinear calibration curves to concentration values by the calibration curve(s) specified in § 90.321 of this chapter before flow correction (if used) and subsequent integration takes place.

§ 90.422 Background sample.

(a) Background samples are produced by drawing a sample of the dilution air during the exhaust collection phase of each test cycle mode.

(1) An individual background sample may be produced and analyzed for each mode. Hence, a unique background value will be used for the emission calculations for each mode.

(2) Alternatively, a single background sample may be produced by drawing a sample during the collection phase of each test cycle mode. Hence, a single cumulative background value will be used for the emission calculations for each mode.

(b) For analysis of the individual sample described in paragraph (a)(1) of this section, a single value representing the average chart deflection over a 10-second stabilized period must be stored. All readings taken during the data logging period must be stable within ± one percent of full scale.

(c) Measure HC, CO, CO_2, and NO_X exhaust and background concentrations in the sample bag(s) with approximately the same flow rates and pressures used during calibration.

§ 90.423 Exhaust gas analytical system; CVS grab sample.

(a) *Schematic drawings.* Figure 4 in Appendix B of this subpart is a schematic drawing of the exhaust gas analytical systems used for analyzing CVS grab ''bag'' samples from spark-ignition engines. Since various configurations can produce accurate results, exact conformance with the drawing is not required. Additional components such as instruments, valves, solenoids, pumps and switches may be used to provide additional information and coordinate the functions of the component systems. Other components such as snubbers, which are not needed to maintain accuracy in some systems, may be excluded if their exclusion is based upon good engineering judgment.

(b) *Major component description.* The analytical system, Figure 4 in Appendix B of this subpart, consists of a flame ionization detector (FID) or a heated flame ionization detector (HFID) for the measurement of hydrocarbons, non-dispersive infrared analyzers (NDIR) for the measurement of carbon monoxide and carbon dioxide, and a chemiluminescence detector (CLD) (or heated CLD (HCLD)) for the measurement of oxides of nitrogen. The exhaust gas analytical system must conform to the following requirements:

(1) The CLD (or HCLD) requires that the nitrogen dioxide present in the sample be converted to nitric oxide before analysis. Other types of analyzers may be used if shown to yield equivalent results and if approved in advance by the Administrator.

(2) If CO instruments are used which are essentially free of CO_2 and water vapor interference, the use of the conditioning column may be deleted. (See § 90.317 and § 90.320.)

(3) A CO instrument is considered to be essentially free of CO_2 and water

vapor interference if its response to a mixture of three percent CO_2 in N_2, which has been bubbled through water at room temperature, produces an equivalent CO response, as measured on the most sensitive CO range, which is less than one percent of full-scale CO concentration on ranges above 300 ppm full scale or less than three ppm on ranges below 300 ppm full scale. (See § 90.317.)

(c) *Alternate analytical systems.* Analysis systems meeting the specifications and requirements of this subpart for dilute sampling may be used upon approval of the Administrator.

(d) *Other analyzers and equipment.* Other types of analyzers and equipment may be used if shown to yield equivalent results and if approved in advance by the Administrator.

§ 90.424 Dilute sampling procedures—CVS calibration.

(a) The CVS is calibrated using an accurate flowmeter and restrictor valve.

(1) The flowmeter calibration must be traceable to the National Institute for Standards and Testing (NIST) and serves as the reference value (NIST ''true'' value) for the CVS calibration. (Note: In no case should an upstream screen or other restriction which can affect the flow be used ahead of the flowmeter unless calibrated throughout the flow range with such a device.)

(2) The CVS calibration procedures are designed for use of a ''metering venturi'' type flowmeter. Large radius or American Society of Mechanical Engineers (ASME) flow nozzles are considered equivalent if traceable to NIST measurements. Other measurement systems may be used if shown to be equivalent under the test conditions in this section and traceable to NIST measurements.

(3) Measurements of the various flowmeter parameters are recorded and related to flow through the CVS.

(4) Procedures using both PDP–CVS and CFV–CVS are outlined in the following paragraphs. Other procedures yielding equivalent results may be used if approved in advance by the Administrator.

(b) After the calibration curve has been obtained, verification of the entire system may be performed by injecting a known mass of gas into the system and comparing the mass indicated by the system to the true mass injected. An indicated error does not necessarily mean that the calibration is wrong, since other factors can influence the accuracy of the system (for example, analyzer calibration, leaks, or HC hangup). A verification procedure is found in paragraph (e) of this section.

(c) *PDP–CVS calibration.* (1) The following calibration procedure outlines the equipment, the test configuration, and the various parameters which must be measured to establish the flow rate of the CVS pump.

(i) All the parameters related to the pump are simultaneously measured with the parameters related to a flowmeter which is connected in series with the pump.

(ii) The calculated flow rate, in cm^3/s, (at pump inlet absolute pressure and temperature) can then be plotted versus a correlation function which is the value of a specific combination of pump parameters.

(iii) The linear equation which relates the pump flow and the correlation function is then determined.

(iv) In the event that a CVS has a multiple speed drive, a calibration for each range used must be performed.

(2) This calibration procedure is based on the measurement of the absolute values of the pump and flowmeter parameters that relate the flow rate at each point. Two conditions must be maintained to assure the accuracy and integrity of the calibration curve:

(i) The temperature stability must be maintained during calibration. (Flowmeters are sensitive to inlet temperature oscillations; this can cause the data points to be scattered. Gradual changes in temperature are acceptable as long as they occur over a period of several minutes.)

(ii) All connections and ducting between the flowmeter and the CVS pump must be absolutely void of leakage.

(3) During an exhaust emission test the measurement of these same pump parameters enables the user to calculate the flow rate from the calibration equation.

(4) Connect a system as shown in Figure 5 in Appendix B of this subpart. Although particular types of equipment are shown, other configurations that yield equivalent results may be used if approved in advance by the Administrator. For the system indicated, the following measurements and accuracies are required:

CALIBRATION DATA MEASUREMENTS

Parameter	Symbol	Units	Sensor-readout tolerances
Barometric pressure (corrected)	P_B	kPa	±.340 kPa.
Ambient temperature	T_A	°C	±.28 °C.
Air temperature into metering venturi	ETI	°C	±1.11 °C.
Pressure drop between the inlet and throat of metering venturi	EDP	kPa	±0.012 kPa.
Air flow	Q_S	m^3/min.	±0.5 percent of NIST value.
Air temperature at CVS pump inlet	PTI	°C	±1.11 °C.
Pressure depression at CVS pump inlet	PPI	kPa	±0.055 kPa.
Pressure head at CVS pump outlet	PPO	kPa	±0.055 kPa.
Air temperature at CVS pump outlet (optional)	PTO	°C	±1.11 °C.
Pump revolutions during test period	N	Revs	±1 Rev.
Elapsed time for test period	t	s	±0.5 s.

(5) After the system has been connected as shown in Figure 5 in Appendix B of this subpart, set the variable restrictor in the wide open position and run the CVS pump for 20 minutes. Record the calibration data.

(6) Reset the restrictor valve to a more restricted condition in an increment of pump inlet depression that will yield a minimum of six data points for the total calibration. Allow the system to stabilize for three minutes and repeat the data acquisition.

(7) *Data analysis:*

(i) The air flow rate, Q_s, at each test point is calculated in standard cubic feet per minute 20 °C, 101.3 kPa from the flowmeter data using the manufacturer's prescribed method.

(ii) The air flow rate is then converted to pump flow, V_o, in cubic meter per revolution at absolute pump inlet temperature and pressure:

$$V_o = \frac{Q_s}{n} \times \frac{T_p}{293} \times \frac{101.3\,\text{kPa}}{P_p}$$

Where:

V_o = Pump flow, m^3/rev at T_p, P_p.

Q_s = Meter air flow rate in standard cubic meters per minute, standard conditions are 20 °C, 101.3 kPa.

n = Pump speed in revolutions per minute.

T_p = Absolute pump inlet temperature in Kelvin, =PTI+273 [°K]

P_p = Absolute pump inlet pressure, kPa. = $P_B - PPI$

Where:

P_B = barometric pressure, kPa

PPI = Pump inlet depression, kPa.

(iii) The correlation function at each test point is then calculated from the calibration data:

$$X_o = \frac{1}{n}\sqrt{\left(\frac{\Delta p}{P_e}\right)}$$

Where:

X_o = correlation function.

Δp = The pressure differential from pump inlet to pump outlet [kPa]

$\Delta p = P_e - P_p$.

Where:

P_e = Absolute pump outlet pressure [kPa], $P_e = P_B + PPI$

(iv) A linear least squares fit is performed to generate the calibration equation which has the form:

$$V_0 = D_o - M(X_o)$$

Where:

D_o and M are the intercept and slope constants, respectively, describing the regression line.

(8) A CVS system that has multiple speeds should be calibrated on each speed used. The calibration curves generated for the ranges will be approximately parallel and the intercept values, D_o, will increase as the pump flow range decreases.

(9) If the calibration has been performed carefully, the calculated values

from the equation will be within ± 0.50 percent of the measured value of V_o. Values of M will vary from one pump to another, but values of D_o for pumps of the same make, model, and range should agree within ± three percent of each other. Calibrations should be performed at pump start-up and after major maintenance to assure the stability of the pump slip rate. Analysis of mass injection data will also reflect pump slip stability.

(d) *CFV–CVS calibration*. (1) Calibration of the CFV is based upon the flow equation for a critical venturi. Gas flow is a function of inlet pressure and temperature:

$$Q_s = \frac{K_v P}{\sqrt{T}}$$

Where:

Q_s = flow rate [m³/min.]
K_v = calibration coefficient
P = absolute pressure [kPa]
T = absolute temperature [°K]

The calibration procedure described in paragraph (d)(3) of this section establishes the value of the calibration coefficient at measured values of pressure, temperature, and air flow.

(2) The manufacturer's recommended procedure must be followed for calibrating electronic portions of the CFV.

(3) Measurements necessary for flow calibration are as follows:

CALIBRATION DATA MEASUREMENTS

Parameter	Symbol	Units	Tolerances
Barometric Pressure (corrected)	P_B	kPa	±.34 kPa
Air temperature, into flowmeter	*ETI*	°C	±.28 °C
Pressure drop between the inlet and throat of metering venturi.	*EDP*	in. H_2 O	±.05 in H_2 O
Air flow	Q_S	m³/min	±.5 percent of NIST value
CFV inlet depression	*PPI*	(kPa)	±.055 kPa
Temperature at venturi inlet	T_V	°C	±2.22 °C

(4) Set up equipment as shown in Figure 6 in Appendix B of this subpart and eliminate leaks. (Leaks between the flow measuring devices and the critical flow venturi will seriously affect the accuracy of the calibration.)

(5) Set the variable flow restrictor to the open position, start the blower, and allow the system to stabilize. Record data from all instruments.

(6) Vary the flow restrictor and make at least eight readings across the critical flow range of the venturi.

(7) *Data analysis*. The data recorded during the calibration are to be used in the following calculations:

(i) Calculate the air flow rate (designated as Q_s) at each test point in standard cubic feet per minute from the flow meter data using the manufacturer's prescribed method.

(ii) Calculate values of the calibration coefficient for each test point:

$$K_v = \frac{Q_s \sqrt{T_v}}{P_v}$$

Where:

Q_s = Flow rate in standard cubic meters per minute, at the standard conditions of 20 °C, 101.3 kPa.
T_v = Temperature at venturi inlet, °K.
P_v = Pressure at venturi inlet, kPa = $P_B - P_{PI}$

Where:

P_{PI} = Venturi inlet pressure depression, kPa.

(iii) Plot K_v as a function of venturi inlet pressure. For choked flow, K_v will have a relatively constant value. As pressure decreases (vacuum increases), the venturi becomes unchoked and K_v decreases. (See Figure 7 in Appendix B to Subpart D.)

(iv) For a minimum of eight points in the critical region, calculate an average K_v and the standard deviation.

(v) If the standard deviation exceeds 0.3 percent of the average K_v , take corrective action.

(e) *CVS system verification*. The following ''gravimetric'' technique may be used to verify that the CVS and analytical instruments can accurately measure a mass of gas that has been injected into the system. (Verification can also be accomplished by constant

flow metering using critical flow orifice devices.)

(1) Obtain a small cylinder that has been charged with 99.5 percent or greater propane or carbon monoxide gas (CAUTION—carbon monoxide is poisonous).

(2) Determine a reference cylinder weight to the nearest 0.01 grams.

(3) Operate the CVS in the normal manner and release a quantity of pure propane into the system during the sampling period (approximately five minutes).

(4) The calculations are performed in the normal way except in the case of propane. The density of propane (0.6109 kg/m^3/carbon atom) is used in place of the density of exhaust hydrocarbons.

(5) The gravimetric mass is subtracted from the CVS measured mass and then divided by the gravimetric mass to determine the percent accuracy of the system.

(6) Good engineering practice requires that the cause for any discrepancy greater than ± two percent must be found and corrected.

§ 90.425 CVS calibration frequency.

Calibrate the CVS positive displacement pump or critical flow venturi following initial installation, major maintenance, or as necessary when indicated by the CVS system verification (described in § 90.424(e)).

§ 90.426 Dilute emission sampling calculations—gasoline fueled engines.

(a) The final reported emission test results must be computed by use of the following formula:

$$A_{WM} = \frac{\sum_{i}^{n}\left(W_i \cdot WF_i\right)}{\sum_{i}^{n}\left(P_i \cdot WF_i\right)} \cdot K_{H_i}$$

Where:

A_{WM} = Final weighted brake-specific mass emission rate for an emission (HC, CO, CO_2, or NO_X) [g/kW-hr]

W_i = Average mass flow rate of an emission (HC, CO, CO_2, NO_X) from a test engine during mode i [g/hr]

WF_i = Weighting factor for each mode i as defined in § 90.410(a).

P_i = Gross average power generated during mode i [kW], calculated from the following equation,

$$P_i = \frac{2\pi}{60{,}000} \times \text{speed} \times \text{torque}$$

Where:

speed = average engine speed measured during mode i [rev./minute]

torque = average engine torque measured during mode i [N-m]

K_{Hi} = NO_X humidity correction factor for mode i. This correction factor only affects calculations for tion factor only affects calculations for NO_X and is equal to one for all other emissions. K_{Hi} is also equal to 1 for all two-stroke engines.

(b) The mass flow rate, W_i in g/hr, of an emission for mode i is determined from the following equations:

$$W_i = Q_i \cdot \text{Density} \cdot \left(\frac{C_{Di} - C_{Bi}}{10^6} \cdot \left(1 - \frac{1}{DF_i}\right)\right)$$

Where:

Q_i = Volumetric flow rate oandard conditions [m^3/hr at STP].

Density = Density of a specific emission (Density_{HC}, Density_{CO}, Density_{CO2}, Density_{NOx}) [g/m^3].

DF_i = Dilution factor of the dilute exhaust during mode i.

C_{Di} = Concentration of the emission (HC, CO, NO_X) in dilute exhaust extracted from the CVS during mode i [ppm].

C_{Bi} = Concentration of the emission (HC, CO, NO_X) in the background sample during mode i [ppm].

STP = Standard temperature and pressure. All volumetric calculations made for the equations in this section are to be corrected to a standard temperature of 20 °C and 101.3 kPa.

(c) Densities for emissions that are to be measured for this test procedure are:

Density_{HC} = 576.8 g/m^3
Density_{NOX} = 1912 g/m^3
Density_{CO} = 1164 g/m^3
Density_{CO2} = 1829 g/m^3

(1) The value of Density_{HC} above is calculated based on the assumption that the fuel used has a carbon to hydrogen ratio of 1:1.85. For other fuels Density_{HC} can be calculated from the following formula:

$$\text{Density}_{HC} = \frac{M_{HC}}{R_{STP}}$$

Where:

M_{HC} = The molecular weight of the hydrocarbon molecule divided by the number of carbon atoms in the molecule [g/mole]

R_{STP} = Ideal gas constant for a gas at STP=0.024065 [m^3-mole].

(2) The idealized molecular weight of the exhaust hydrocarbons, i.e., the molecular weight of the hydrocarbon molecule divided by the number of carbon atoms in the molecule, M_{HC}, can be calculated from the following formula:

$$M_{HC} = M_C + \alpha M_H + \beta M_O$$

Where:

M_C = Molecular weight of carbon=12.01 [g/mole]

M_H = Molecular weight of hydrogen=1.008 [g/mole]

M_O = Molecular weight of oxygen=16.00 [g/mole]

α = Hydrogen to carbon ratio of the test fuel

β = Oxygen to carbon ratio of the test fuel

(3) The value of Density_{NOX} above assumes that NO_X is entirely in the form of NO_2

(d) The dilution factor, DF, is the ratio of the volumetric flow rate of the background air to that of the raw engine exhaust. The following formula is used to determine DF:

$$DF = \frac{13.4}{C_{D_{HC}} + C_{D_{CO}} + C_{D_{CO_2}}}$$

Where:

C_{DHC} = Concentration of HC in the dilute sample [ppm]

C_{DCO} = Concentration of CO in the dilute sample [ppm]

C_{DCO2} = Concentration of CO_2 in the dilute sample [ppm]

(e) The humidity correction factor K_H is an adjustment made to the measured NO_X. This corrects for the sensitivity that a spark-ignition engine has to the humidity of its combustion air. The following formula is used to determine K_H for NO_X calculations:

$$K_H = \frac{1}{1 - 0.0329(H - 10.71)}$$

Where:

H = Absolute humidity of the engine intake air [grams of water per kilogram of dry air].

(f) Calculate the absolute humidity of the engine intake air H using the following formula:

$$H = \frac{6.211 P_{dew}}{P_b - \left(\frac{P_{dew}}{100}\right)}$$

Where:

P_{dew} = Saturated vapor pressure at the dew point temperature [kPa]

P_b = Barometric pressure [kPa].

(g) Compute the final reported brake-specific fuel consumption (BSFC) by use of the following formula:

$$BSFC = \frac{\sum_i^n \left(G_{FUEL_i} \times WF_i\right)}{\sum_i^n \left(P_i \times WF_i\right)}$$

Where:

BSFC = brake-specific fuel consumption in grams of fuel per brake kilowatt-hour [g/kW-hr].

G_{FUELi} = mass flow rate of engine fuel during mode i [g/hr]

WF_i = Weighting factors for each mode according to § 90.410(a)

P_i = Gross average power generated during mode i [kW], calculated from the following equation,

$$P_i = \frac{2\pi}{60{,}000} \times \text{speed} \times \text{torque}$$

Where:

speed = average engine speed measured during mode i [rev./minute]

torque = average engine torque measured during mode i [N–m]

(h) The fuel mass flow rate, F_i, can be either measured or calculated using the following formula:

$$F_i = \frac{M_{FUEL}}{T}$$

Where:

M_{FUEL} = Mass of fuel consumed by the engine during the mode [g]

T = Duration of the sampling period [hr]

(i) The mass of fuel consumed during the mode sampling period, M_{FUEL}, can

be calculated from the following equation:

$$M_{FUEL} = \frac{G_s}{R_2 \times 273.15}$$

Where:

G_s = Mass of carbon measured during the mode sampling period [g]

R_2 = The fuel carbon weight fraction, which is the mass of carbon in fuel per mass of fuel [g/g]

The grams of carbon measured during the mode, G_s, can be calculated from the following equation:

$$G_s = \frac{12.011 \times HC_{mass}}{12.011 + 1.008\alpha} + 0.429CO_{mass} + 0.273CO_{2mass}$$

Where:

HC_{mass}=mass of hydrocarbon emissions for the mode sampling period [grams]

CO_{2mass}=mass of carbon monoxide emissions for the mode sampling period [grams]

CO_{2mass}=mass of carbon dioxide emissions for the mode sampling period [grams]

α=The atomic hydrogen to carbon ratio of the fuel

§ 90.427 Catalyst thermal stress resistance evaluation.

(a) The purpose of the evaluation procedure specified in this section is to determine the effect of thermal stress on catalyst conversion efficiency for Phase 1 engines. The thermal stress is imposed on the test catalyst by exposing it to quiescent heated air in an oven. The evaluation of the effect of such stress on catalyst performance is based on the resultant degradation of the efficiency with which the conversions of specific pollutants are promoted. The application of this evaluation procedure involves the several steps that are described in the following paragraphs.

(b) *Determination of initial conversion efficiency*. (1) A synthetic exhaust gas mixture having the composition specified in § 90.329 is heated to a temperature of 450 °C ± 5 °C and passed through the new test catalyst or, optionally, a test catalyst that has been exposed to temperatures less than or equal to 500 °C for less than or equal to two hours, under flow conditions that are representative of anticipated in-use conditions.

(2) The concentration of each pollutant of interest, that is, hydrocarbons, carbon monoxide, or oxides of nitrogen, in the effluent of the catalyst is determined by means of the instrumentation that is specified for exhaust gas analysis in subpart D of this part.

(3) The conversion efficiency for each pollutant is determined by:

(i) Subtracting the effluent concentration from the initial concentration;

(ii) Dividing this result by the initial concentration; and

(iii) Multiplying this result by 100 percent.

(c) *Imposition of thermal stress*. (1) The catalyst is placed in an oven that has been pre-heated to 1000 °C and the temperature of the air in the oven is maintained at 1000 °C ± 10 °C for six hours.

(2) The catalyst is removed from the oven and allowed to cool to room temperature.

(d) *Determination of final conversion efficiency*. The steps listed in paragraph (b) of this section are repeated.

(e) *Determination of conversion efficiency degradation*.

(1) The final conversion efficiency determined in paragraph (c) of this section is subtracted from the initial conversion efficiency determined in paragraph (b) of this section.

(2) This result is divided by the initial conversion efficiency.

(3) This result is multiplied by 100 percent.

(f) *Determination of compliance with degradation limit*. The percent degradation determined in paragraph (e) of this section must not be greater than 20 percent.

[60 FR 34598, July 3, 1995, as amended at 64 FR 15244, Mar. 30, 1999]

APPENDIX A TO SUBPART E OF PART 90—TABLES

TABLE 1—PARAMETERS TO BE MEASURED OR CALCULATED AND RECORDED

Parameter	Units
Airflow rate (dry), if applicable	g/h
Fuel flow rate	g/h
Engine Speed	rpm
Engine Torque Output	N m
Power Output	kW
Air inlet temperature	°C
Air humidity	mg/kg
Coolant temperature (liquid cooled)	°C
Exhaust mixing chamber surface temperature, if applicable	°C
Exhaust sample line temperature, if applicable	°C
Total Accumulated hours of Engine Operation	h
Barometric Pressure	kPa

TABLE 2—TEST CYCLES FOR CLASS I–A, I–B, AND CLASS I–V ENGINES

Mode Speed	1	2	3	4	5	6	7	8	9	10	11
	Rated Speed					Intermediate Speed					Idle
Mode Points—A											
Cycle	.....	.....	.....	.....	.....	1	2	3	4	5	6
Load Percent—A											
Cycle	.....	.....	.....	.....	.....	100	75	50	25	10	0
Weighting	.....	.....	.....	.....	.....	9%	20%	29%	30%	7%	5%
Mode Points—B											
Cycle	1	2	3	4	5	.....	.....	.....	.....	.....	6
Load Percent—B											
Cycle	100	75	50	25	10	.....	.....	.....	.....	.....	0
Weighting	9%	20%	29%	30%	7%	.....	.....	.....	.....	.....	5%
Mode Points—C											
Cycle	1	.....	.....	.....	.....	.....	.....	.....	.....	.....	2
Load Percent—C											
Cycle	100	.....	.....	.....	.....	.....	.....	.....	.....	.....	0
Weighting for Phase 1 Engines	90%	.....	.....	.....	.....	.....	.....	.....	.....	.....	10%
Weighting for Phase 2 Engines	85%	.....	.....	.....	.....	.....	.....	.....	.....	.....	15%

[60 FR 34598, July 3, 1995, as amended at 65 FR 24313, Apr. 25, 2000]

APPENDIX B TO SUBPART E OF PART 90—FIGURES

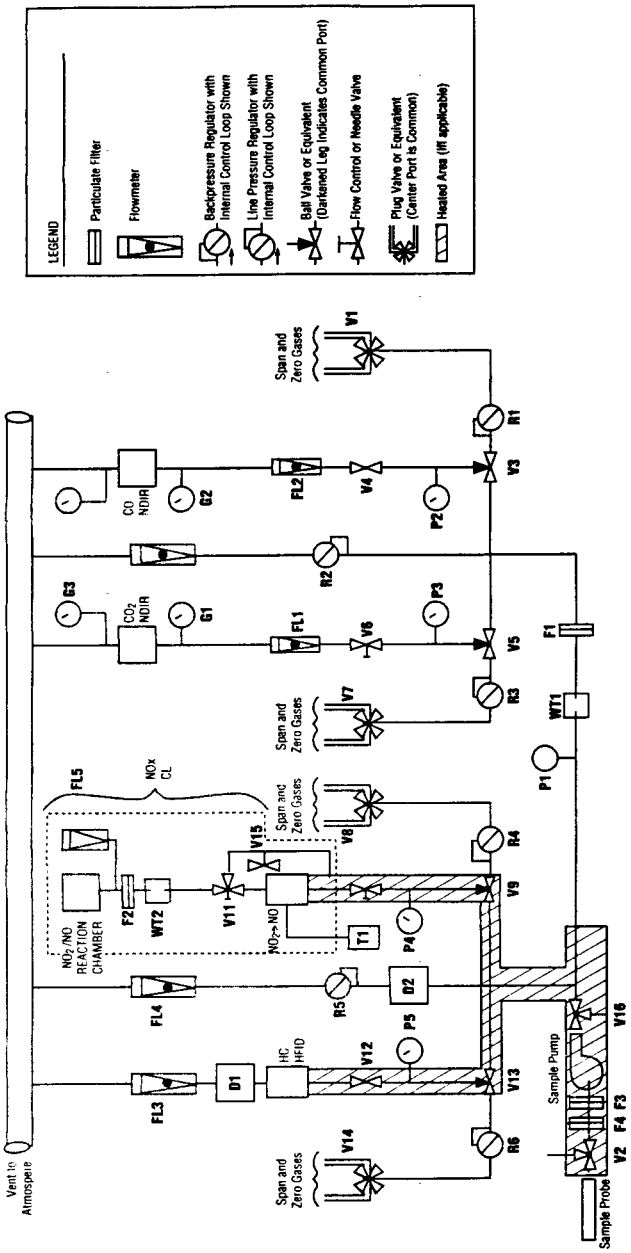

Figure 1. — Exhaust Gas Sampling and Analytical Train, Continuous Sampling

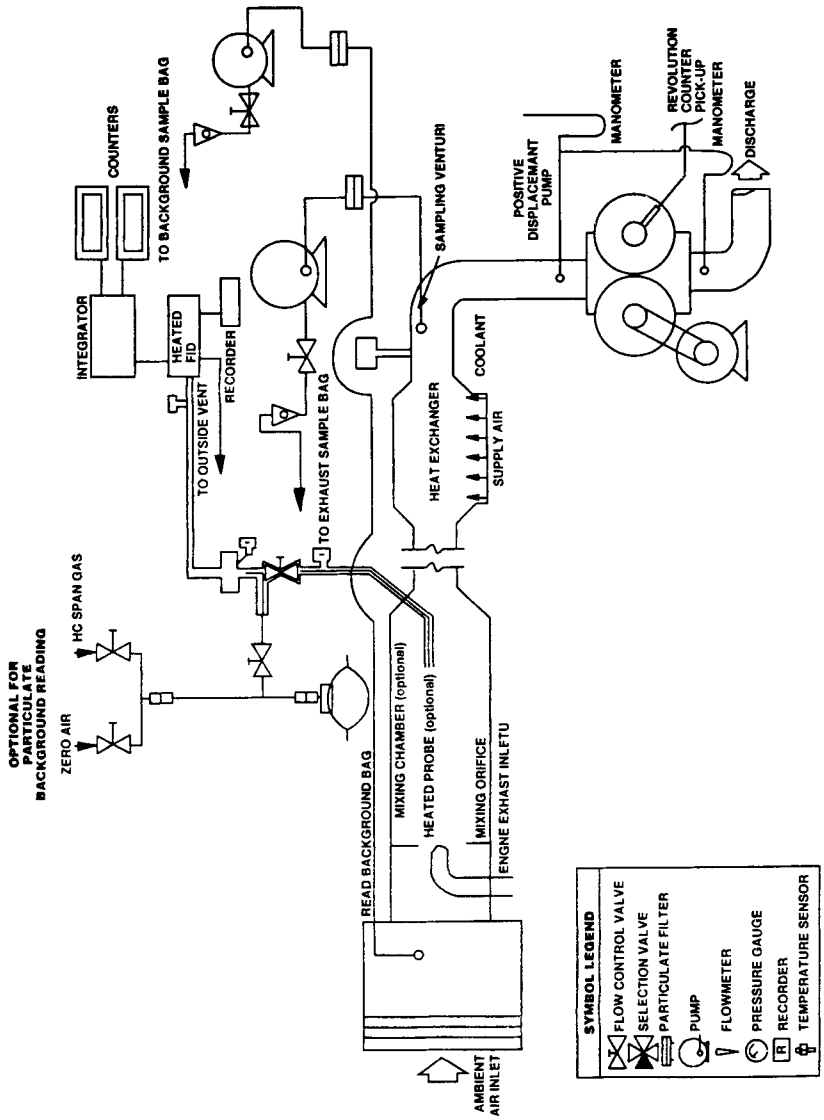

Figure 2 — Gaseous Emissions Sampling System (PDP-CVS) Showing both grab bag sampling and continous sampling

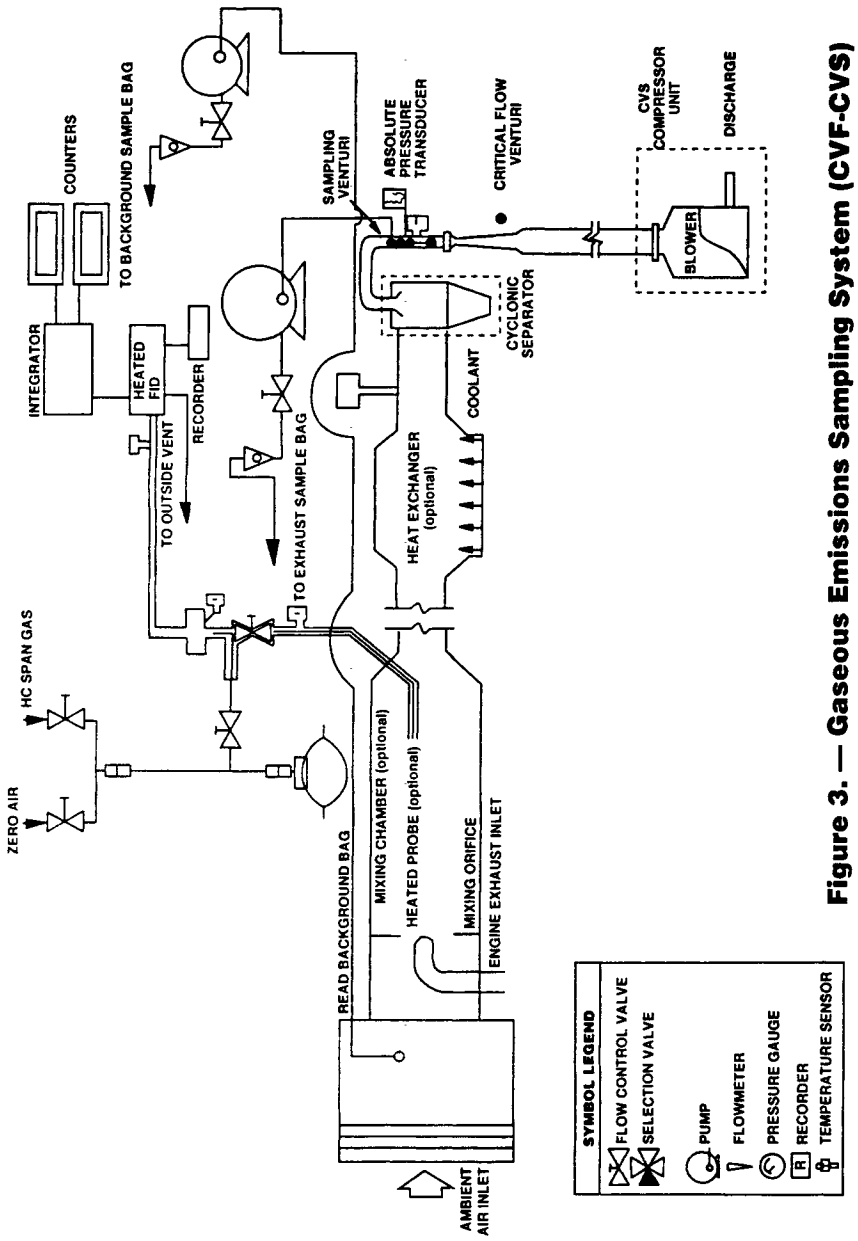

Figure 3. — Gaseous Emissions Sampling System (CVF-CVS)

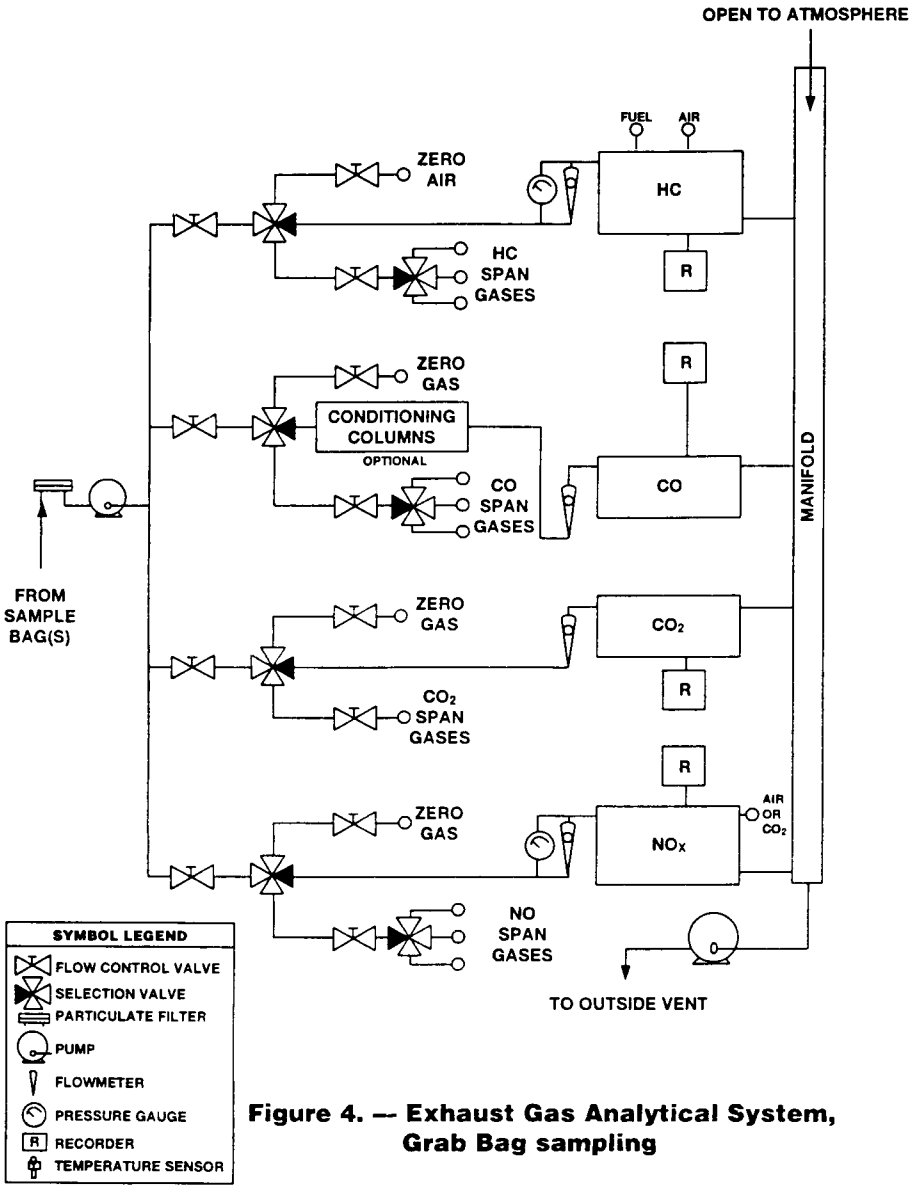

Figure 4. — Exhaust Gas Analytical System, Grab Bag sampling

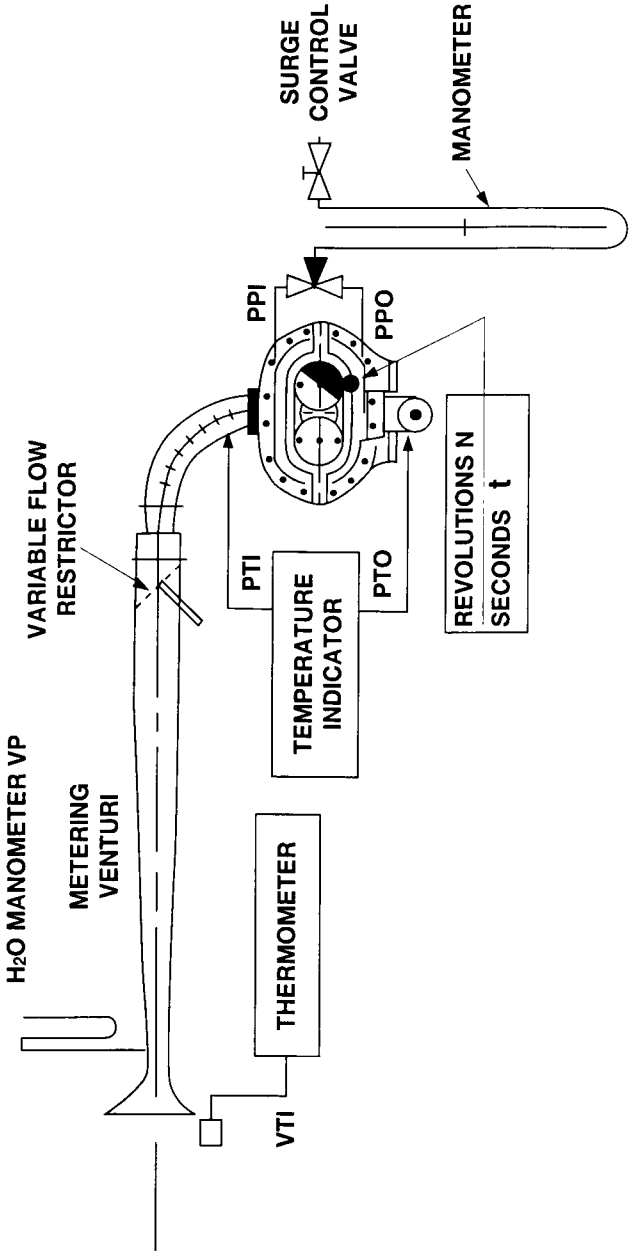

Figure 5. — PDP-CVS Calibration Configuration

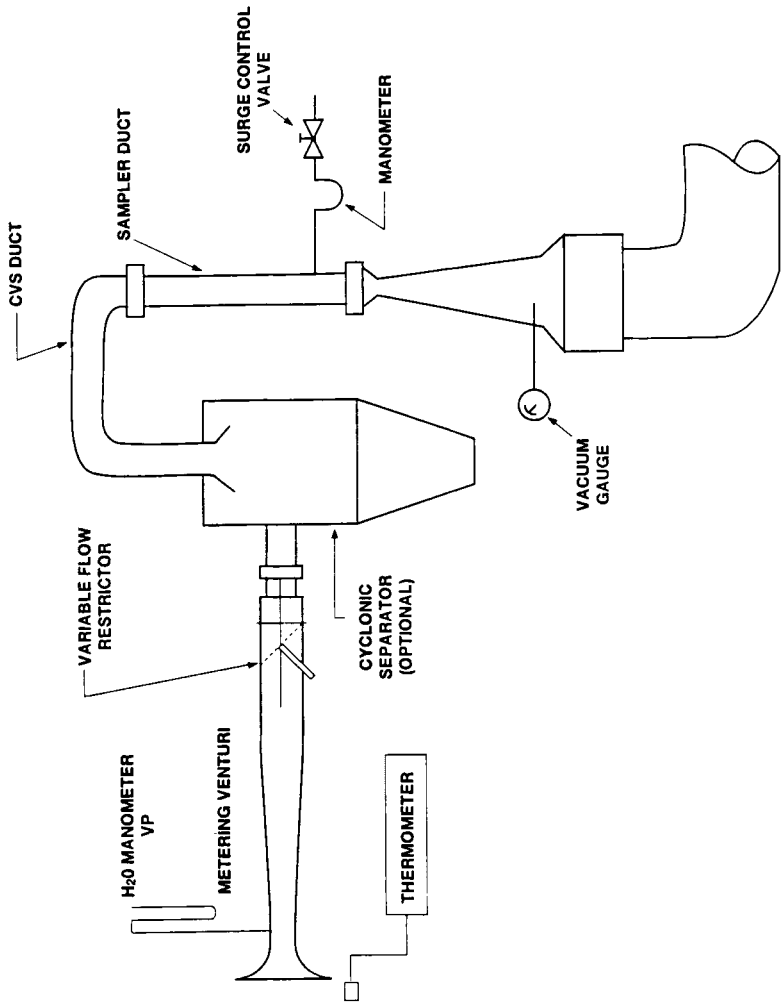

Figure 6. — CFV-CVS Calibration Configuration

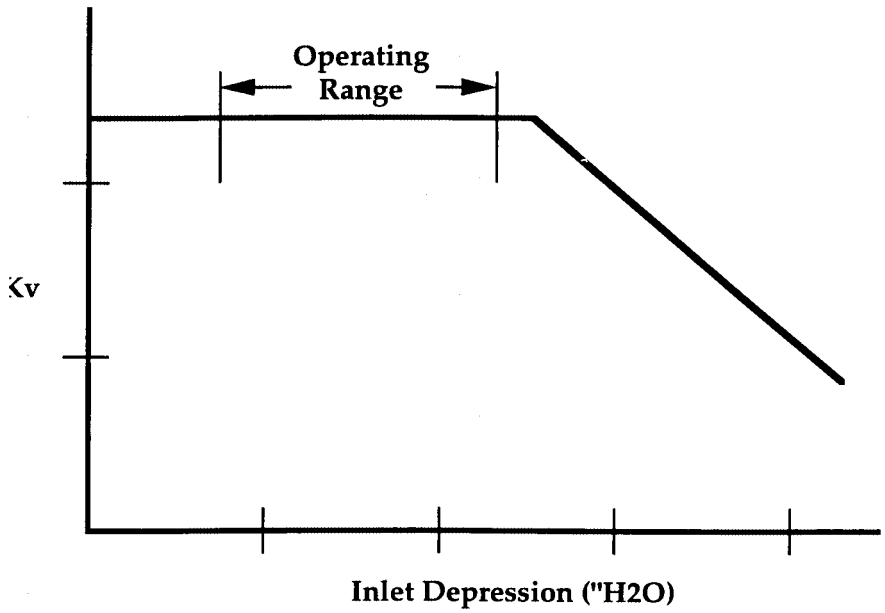

Figure 7.—Sonic Flow Choking

Subpart F—Selective Enforcement Auditing

§ 90.501 Applicability.

The requirements of subpart F shall be applicable to all nonroad engines and vehicles subject to the provisions of subpart A of part 90.

§ 90.502 Definitions.

The definitions in subpart A of this part apply to this subpart. The following definitions shall also apply to this subpart.

Acceptable quality level (AQL) means the maximum percentage of failing engines that can be considered a satisfactory process average for sampling inspections.

Configuration means any subclassification of an engine family which can be described on the basis of gross power, emission control system, governed speed, fuel system, engine calibration, and other parameters as designated by the Administrator.

Inspection criteria means the pass and fail numbers associated with a particular sampling plan.

Test engine means an engine in a test sample.

Test sample means the collection of engines selected from the population of an engine family for emission testing.

§ 90.503 Test orders.

(a) The Administrator shall require any testing under this subpart by means of a test order addressed to the manufacturer.

(b) The test order will be signed by the Assistant Administrator for Air and Radiation or his or her designee. The test order will be delivered in person by an EPA enforcement officer or EPA authorized representative to a company representative or sent by registered mail, return receipt requested, to the manufacturer's representative

who signed the application for certification submitted by the manufacturer, pursuant to the requirements of the applicable section of subpart B of this part. Upon receipt of a test order, the manufacturer shall comply with all of the provisions of this subpart and instructions in the test order.

(c) *Information included in test order.* (1) The test order will specify the engine family to be selected for testing, the manufacturer's engine assembly plant or associated storage facility or port facility (for imported engines) from which the engines must be selected, the time and location at which engines must be selected, and the procedure by which engines of the specified family must be selected. The test order may specify the configuration to be audited and/or the number of engines to be selected per day. Engine manufacturers will be required to select a minimum of four engines per day unless an alternate selection procedure is approved pursuant to § 90.507(a), or unless total production of the specified configuration is less than four engines per day. If total production of the specified configuration is less than four engines per day, the manufacturer will select the actual number of engines produced per day.

(2) The test order may include alternate families to be selected for testing at the Administrator's discretion in the event that engines of the specified family are not available for testing because those engines are not being manufactured during the specified time, or are not being stored at the specified assembly plant, associated storage facilities or port of entry.

(3) If the specified family is not being manufactured at a rate of at least two engines per day in the case of manufacturers specified in § 90.508(g)(1), or one engine per day in the case of manufacturers specified in § 90.508(g)(2), over the expected duration of the audit, the Assistant Administrator or his or her designated representative may select engines of the alternate family for testing.

(4) In addition, the test order may include other directions or information essential to the administration of the required testing.

(d) A manufacturer may submit a list of engine families and the corresponding assembly plants, associated storage facilities, or (in the case of imported engines) port facilities from which the manufacturer prefers to have engines selected for testing in response to a test order. In order that a manufacturer's preferred location be considered for inclusion in a test order for a particular engine family, the list must be submitted prior to issuance of the test order. Notwithstanding the fact that a manufacturer has submitted the list, the Administrator may order selection at other than a preferred location.

(e) Upon receipt of a test order, a manufacturer shall proceed in accordance with the provisions of this subpart.

(f)(1) During a given model year, the Administrator shall not issue to a manufacturer more Selective Enforcement Auditing (SEA) test orders than an annual limit determined by the following:

(i) for manufacturers with a projected annual production of less than 100,000 engines bound for the United States market for that model year, the number is two;

(ii) for manufacturers with a projected annual production of 100,000 or more engines bound for the United States market for that model year, by dividing the manufacturer's total number of certified engine families by five and rounding to the nearest whole number, unless the number of engine families is less than eight, in which case the number is two.

(2) If a manufacturer submits to EPA in writing prior to or during the model year a reliable sales projection update or adds engine families or deletes engine families from its production, that information will be used for recalculating the manufacturer's annual limit of SEA test orders.

(3) Any SEA test order for which the family or configuration, as appropriate, fails under § 90.510 or for which testing is not completed will not be counted against the annual limit.

(4) When the annual limit has been met, the Administrator may issue additional test orders to test those families or configurations for which evidence

exists indicating nonconformity, or for which the Administrator has reason to believe are not being appropriately represented or tested in Production Line Testing conducted under subpart H of this part, if applicable. An SEA test order issued pursuant to this provision will include a statement as to the reason for its issuance.

[60 FR 34598, July 3, 1995, as amended at 64 FR 15244, Mar. 30, 1999]

§ 90.504 Testing by the Administrator.

(a) The Administrator may require by test order under § 90.503 that engines of a specified family be selected in a manner consistent with the requirements of § 90.507 and submitted to the Administrator at the place designated for the purpose of conducting emission tests. These tests will be conducted in accordance with § 90.508 to determine whether engines manufactured by the manufacturer conform with the regulations with respect to which the certificate of conformity was issued.

(b) *Designating official data.* (1) Whenever the Administrator conducts a test on a test engine or the Administrator and manufacturer each conduct a test on the same test engine, the results of the Administrator's test will comprise the official data for that engine.

(2) Whenever the manufacturer conducts all tests on a test engine, the manufacturer's test data will be accepted as the official data, provided that if the Administrator makes a determination based on testing conducted under paragraph (a) of this section that there is a substantial lack of agreement between the manufacturer's test results and the Administrator's test results, no manufacturer's test data from the manufacturer's test facility will be accepted for purposes of this subpart.

(c) If testing conducted under paragraph (a) of this section is unacceptable under § 90.503, the Administrator shall:

(1) Notify the manufacturer in writing of the Administrator's determination that the test facility is inappropriate for conducting the tests required by this subpart and the reasons therefor; and

(2) Reinstate any manufacturer's data upon a showing by the manufacturer that the data acquired under paragraph (a) of this section was erroneous and the manufacturer's data was correct.

(d) The manufacturer may request in writing that the Administrator reconsider his or her determination in paragraph (b)(2) of this section based on data or information which indicates that changes have been made to the test facility and these changes have resolved the reasons for disqualification.

§ 90.505 Maintenance of records; submittal of information.

(a) The manufacturer of any new nonroad engine subject to any of the provisions of this subpart shall establish, maintain, and retain the following adequately organized and indexed records:

(1) *General records.* A description of all equipment used to test engines, as specified in subpart D of this part, in accordance with § 90.508 pursuant to a test order issued under this subpart.

(2) *Individual records.* These records pertain to each audit conducted pursuant to this subpart and shall include:

(i) The date, time, and location of each test;

(ii) The number of hours of service accumulated on the engine when the test began and ended;

(iii) The names of all supervisory personnel involved in the conduct of the audit;

(iv) A record and description of any repairs performed prior to and/or subsequent to approval by the Administrator, giving the date, associated time, justification, name(s) of the authorizing personnel, and names of all supervisory personnel responsible for the conduct of the repair;

(v) The date the engine was shipped from the assembly plant, associated storage facility or port facility and date the engine was received at the testing facility;

(vi) A complete record of all emission tests performed pursuant to this subpart (except tests performed directly by EPA), including all individual worksheets and/or other documentation relating to each test, or exact copies thereof, to be in accordance with the record requirements specified in

§§ 90.405, 90.406, 90.418, and/or 90.425 as applicable.

(vii) A brief description of any significant audit events commencing with the test engine selection process, but not described under paragraph (a)(2) of this section, including such extraordinary events as engine damage during shipment.

(3) The manufacturer shall record test equipment description, pursuant to paragraph (a)(1) of this section, for each test cell that can be used to perform emission testing under this subpart.

(b) The manufacturer shall retain all records required to be maintained under this subpart for a period of one year after completion of all testing in response to a test order. Records may be retained as hard copy or reduced to microfilm, floppy disc, and so forth, depending upon the manufacturer's record retention procedure, provided that in every case all the information contained in the hard copy is retained.

(c) The manufacturer shall, upon request by the Administrator, submit the following information with regard to engine production:

(1) Projected U.S. sales data for each engine configuration within each engine family for which certification is requested;

(2) Number of engines, by configuration and assembly plant, scheduled for production for the time period designated in the request;

(3) Number of engines, by configuration and by assembly plant, storage facility or port facility, scheduled to be stored at facilities for the time period designated in the request; and

(4) Number of engines, by configuration and assembly plant, produced during the time period designated in the request that are complete for introduction into commerce.

(d) Nothing in this section limits the Administrator's discretion in requiring the manufacturer to retain additional records or submit information not specifically required by this section.

(e) The manufacturer shall address all reports, submissions, notifications, and requests for approvals made under this subpart to: Director, Manufacturers Operations Division, U.S. Environmental Protection Agency, 6405–J, 401 M St., SW., Washington, DC 20460.

§ 90.506 Right of entry and access.

(a) To allow the Administrator to determine whether a manufacturer is complying with the provisions of this subpart, a test order is issued which authorizes EPA enforcement officers or their authorized representatives upon presentation of credentials to enter during operating hours any of the following places:

(1) Any facility where any engine to be introduced into commerce, including ports of entry, or any emission-related component is manufactured, assembled, or stored;

(2) Any facility where any tests conducted pursuant to a test order or any procedures or activities connected with these tests are or were performed;

(3) Any facility where any engine which is being tested, was tested, or will be tested is present; and

(4) Any facility where any record or other document relating to any of the above is located.

(b) Upon admission to any facility referred to in paragraph (a) of this section, EPA enforcement officers or EPA authorized representatives are authorized to perform the following inspection-related activities:

(1) To inspect and monitor any aspects of engine assembly, storage, testing and other procedures, and the facilities in which these procedures are conducted;

(2) To inspect and monitor any aspect of engine test procedures or activities, including, but not limited to, engine selection, preparation, service accumulation, emission test cycles, and maintenance and verification of test equipment calibration;

(3) To inspect and make copies of any records or documents related to the assembly, storage, selection and testing of an engine in compliance with a test order; and

(4) To inspect and photograph any part or aspect of any engine and any component used in the assembly thereof that is reasonably related to the purpose of the entry.

(c) EPA enforcement officers or EPA authorized representatives are authorized to obtain reasonable assistance

without cost from those in charge of a facility to help the officers perform any function listed in this subpart, and they are authorized to request the recipient of a test order to make arrangements with those in charge of a facility operated for the manufacturer's benefit to furnish reasonable assistance without cost to EPA, whether or not the recipient controls the facility.

(1) Reasonable assistance includes, but is not limited to, clerical, copying, interpretation and translation services, the making available on an EPA enforcement officer's or EPA authorized representative's request of personnel of the facility being inspected during their working hours to inform the EPA enforcement officer or EPA authorized representative of how the facility operates and to answer the officer's questions, and the performance on request of emission tests on any engine which is being, has been, or will be used for SEA testing.

(2) A manufacturer may be compelled to cause the personal appearance of any employee at such a facility before an EPA enforcement officer or EPA authorized representative by written request for his or her appearance, signed by the Assistant Administrator for Air and Radiation, served on the manufacturer. Any such employee who has been instructed by the manufacturer to appear will be entitled to be accompanied, represented, and advised by counsel.

(d) EPA enforcement officers or EPA authorized representatives are authorized to seek a warrant or court order authorizing the EPA enforcement officers or EPA authorized representatives to conduct activities related to entry and access as authorized in this section, as appropriate, to execute the functions specified in this section. EPA enforcement officers or authorized representatives may proceed ex parte to obtain a warrant whether or not the EPA enforcement officers or EPA authorized representatives first attempted to seek permission of the recipient of the test order or the party in charge of the facilities in question to conduct activities related to entry and access as authorized in this section.

(e) A recipient of a test order shall permit an EPA enforcement officer(s) or EPA authorized representative(s) who presents a warrant or court order to conduct activities related to entry and access as authorized in this section and as described in the warrant or court order. The recipient shall also cause those in charge of its facility or a facility operated for its benefit to permit entry and access as authorized in this section pursuant to a warrant or court order whether or not the recipient controls the facility. In the absence of a warrant or court order, an EPA enforcement officer(s) or EPA authorized representative(s) may conduct activities related to entry and access as authorized in this section only upon the consent of the recipient of the test order or the party in charge of the facilities in question.

(f) It is not a violation of this part or of the Clean Air Act for any person to refuse to permit an EPA enforcement officer(s) or an EPA authorized representative(s) to conduct activities related to entry and access as authorized in this section if the officer or representative appears without a warrant or court order.

(g) A manufacturer is responsible for locating its foreign testing and manufacturing facilities in jurisdictions in which local foreign law does not prohibit an EPA enforcement officer(s) or an EPA authorized representative(s) from conducting the entry and access activities specified in this section. EPA will not attempt to make any inspections which it has been informed that local foreign law prohibits.

§ 90.507 Sample selection.

(a) Engines comprising a test sample will be selected at the location and in the manner specified in the test order. If a manufacturer determines that the test engines cannot be selected in the manner specified in the test order, an alternative selection procedure may be employed, provided the manufacturer requests approval of the alternative procedure prior to the start of test sample selection, and the Administrator approves the procedure.

(b) The manufacturer shall assemble the test engines of the family selected for testing using its normal mass production process for engines to be distributed into commerce. If, between

the time the manufacturer is notified of a test order and the time the manufacturer finishes selecting test engines, the manufacturer implements any change(s) in its production processes, including quality control, which may reasonably be expected to affect the emissions of the engines selected, then the manufacturer shall, during the audit, inform the Administrator of such changes. If the test engines are selected at a location where they do not have their operational and emission control systems installed, the test order will specify the manner and location for selection of components to complete assembly of the engines. The manufacturer shall assemble these components onto the test engines using normal assembly and quality control procedures as documented by the manufacturer.

(c) No quality control, testing, or assembly procedures will be used on the test engine or any portion thereof, including parts and subassemblies, that have not been or will not be used during the production and assembly of all other engines of that family, unless the Administrator approves the modification in assembly procedures pursuant to paragraph (b) of this section.

(d) The test order may specify that an EPA enforcement officer(s) or authorized representative(s), rather than the manufacturer, select the test engines according to the method specified in the test order.

(e) The order in which test engines are selected determines the order in which test results are to be used in applying the sampling plan in accordance with § 90.510.

(f) The manufacturer shall keep on hand all untested engines, if any, comprising the test sample until a pass or fail decision is reached in accordance with § 90.510(e). The manufacturer may ship any tested engine which has not failed in accordance with § 90.510(b). However, once the manufacturer ships any test engine, it relinquishes the prerogative to conduct retests as provided in § 90.508(i).

§ 90.508 Test procedures.

(a) For nonroad engines subject to the provisions of this subpart, the prescribed test procedures are the appropriate small SI engine test procedures as described in subpart E of this part.

(b)(1) The manufacturer shall not adjust, repair, prepare, or modify the engines selected for testing and shall not perform any emission tests on engines selected for testing pursuant to the test order unless this adjustment, repair, preparation, modification, and/or tests are documented in the manufacturer's engine assembly and inspection procedures and are actually performed or unless these adjustments and/or tests are required or permitted under this subpart or are approved in advance by the Administrator.

(2) The Administrator may adjust or cause to be adjusted any engine parameter which the Administrator has determined to be subject to adjustment for certification and Selective Enforcement Audit testing in accordance with § 90.112(c), to any setting within the physically adjustable range of that parameter, as determined by the Administrator in accordance with § 90.112(a), prior to the performance of any tests. However, if the idle speed parameter is one which the Administrator has determined to be subject to adjustment, the Administrator shall not adjust it to any setting which causes a lower engine idle speed than would have been possible within the physically adjustable range of the idle speed parameter if the manufacturer had accumulated 12 hours of service on the engine under paragraph (c) of this section, all other parameters being identically adjusted for the purpose of the comparison. The manufacturer may be requested to supply information needed to establish an alternate minimum idle speed. The Administrator, in making or specifying these adjustments, may consider the effect of the deviation from the manufacturer's recommended setting on emission performance characteristics as well as the likelihood that similar settings will occur on in-use engines. In determining likelihood, the Administrator may consider factors such as, but not limited to, the effect of the adjustment on engine performance characteristics and surveillance information from similar in-use engines.

(c) *Service Accumulation*. Prior to performing exhaust emission testing on an SEA test engine, the manufacturer

may accumulate on each engine a number of hours of service equal to the greater of 12 hours or the number of hours the manufacturer accumulated during certification on the emission data engine corresponding to the family specified in the test order.

(1) Service accumulation must be performed in a manner using good engineering judgment to obtain emission results representative of normal production engines. This service accumulation must be consistent with the new engine break-in instructions contained in the applicable owner's manual.

(2) The manufacturer shall accumulate service at a minimum rate of 12 hours per engine during each 24-hour period, unless otherwise approved by the Administrator.

(i) The first 24 hour period for service shall begin as soon as authorized checks, inspections, and preparations are completed on each engine.

(ii) The minimum service or mileage accumulation rate does not apply on weekends or holidays.

(iii) If the manufacturer's service or target is less than the minimum rate specified (12 hours per day), then the minimum daily accumulation rate shall be equal to the manufacturer's service target.

(3) Service accumulation shall be completed on a sufficient number of test engines during consecutive 24-hour periods to assure that the number of engines tested per day fulfills the requirements of paragraphs (g)(1) and (g)(2) of this section.

(d) The manufacturer shall not perform any maintenance on test engines after selection for testing, nor shall the Administrator allow deletion of any engine from the test sequence, unless requested by the manufacturer and approved by the Administrator before any engine maintenance or deletion.

(e) The manufacturer shall expeditiously ship test engines from the point of selection to the test facility. If the test facility is not located at or in close proximity to the point of selection, the manufacturer shall assure that test engines arrive at the test facility within 24 hours of selection, except that the Administrator may approve more time for shipment based upon a request by the manufacturer accompanied by a satisfactory justification.

(f) If an engine cannot complete the service accumulation or an emission test because of a malfunction, the manufacturer may request that the Administrator authorize either the repair of that engine or its deletion from the test sequence.

(g) Whenever a manufacturer conducts testing pursuant to a test order issued under this subpart, the manufacturer shall notify the Administrator within one working day of receipt of the test order as to which test facility will be used to comply with the test order. If no test cells are available at a desired facility, the manufacturer must provide alternate testing capability satisfactory to the Administrator.

(1) A manufacturer with projected nonroad engine sales for the United States market for the applicable year of 7,500 or greater shall complete emission testing at a minimum rate of two engines per 24-hour period, including each voided test.

(2) A manufacturer with projected nonroad engine sales for the United States market for the applicable year of less than 7,500 shall complete emission testing at a minimum rate of one engine per 24-hour period, including each voided test.

(3) The Administrator may approve a lower daily rate of emission testing based upon a request by a manufacturer accompanied by a satisfactory justification.

(h) The manufacturer shall perform test engine selection, shipping, preparation, service accumulation, and testing in such a manner as to assure that the audit is performed in an expeditious manner.

(i) *Retesting*. (1) The manufacturer may retest any engines tested during a Selective Enforcement Audit once a fail decision for the audit has been reached in accordance with § 90.510(e).

(2) The Administrator may approve retesting at other times based upon a request by the manufacturer accompanied by a satisfactory justification.

(3) The manufacturer may retest each engine a total of three times. The manufacturer shall test each engine or vehicle the same number of times. The

manufacturer may accumulate additional service before conducting a retest, subject to the provisions of paragraph (c) of this section.

(j) A manufacturer may test engines with the test procedure specified in subpart E of this part to demonstrate compliance with the exhaust emission standards; however, if alternate procedures were used in certification pursuant to § 90.120, then those alternate procedures shall be used.

§ 90.509 Calculation and reporting of test results.

(a) Initial test results are calculated following the applicable test procedure specified in paragraph (a) of § 90.508. The manufacturer shall round these results, in accordance with ASTM E29–93a, to the number of decimal places contained in the applicable emission standard expressed to one additional significant figure. ASTM E29–93a has been incorporated by reference. See § 90.7.

(b)(1) Final test results are calculated by summing the initial test results derived in paragraph (a) of this section for each test engine, dividing by the number of tests conducted on the engine, and rounding to the same number of decimal places contained in the applicable standard. For Phase 2 engines only, this result shall be expressed to one additional significant figure.

(2) Final deteriorated test results (for Phase 2 test engines only) are calculated by applying the appropriate deterioration factors, from the certification process for the engine family, to the final test results, and rounding to the same number of decimal places contained in the applicable standard.

(c) Within five working days after completion of testing of all engines pursuant to a test order, the manufacturer shall submit to the Administrator a report which includes the following information:

(1) The location and description of the manufacturer's exhaust emission test facilities which were utilized to conduct testing reported pursuant to this section;

(2) The applicable standards or compliance levels against which the engines were tested;

(3) A description of the engine and its associated emission-related component selection method used;

(4) For each test conducted;

(i) Test engine description, including:

(A) Configuration and engine family identification;

(B) Year, make and build date;

(C) Engine identification number; and

(D) Number of hours of service accumulated on engine prior to testing;

(ii) Location where service accumulation was conducted and description of accumulation procedure and schedule;

(iii) Test number, date, test procedure used, initial test results before and after rounding and final test results for all exhaust emission tests, whether valid or invalid, and the reason for invalidation, if applicable;

(iv) A complete description of any modification, repair, preparation, maintenance, and/or testing which was performed on the test engine and has not been reported pursuant to any other paragraph of this subpart and will not be performed on all other production engines;

(v) Where an engine was deleted from the test sequence by authorization of the Administrator, the reason for the deletion;

(vi) Any other information the Administrator may request relevant to the determination as to whether the new engines being manufactured by the manufacturer do in fact conform with the regulations with respect to which the certificate of conformity was issued; and

(5) The following statement and endorsement:

This report is submitted pursuant to sections 213 and 208 of the Clean Air Act. This Selective Enforcement Audit was conducted in complete conformance with all applicable regulations under 40 CFR part 90 *et seq.* and the conditions of the test order. No emission-related changes to production processes or quality control procedures for the engine family tested have been made between receipt of the test order and conclusion of the audit. All data and information reported herein is, to the best of (Company Name) knowledge, true and accurate. I am aware of

the penalties associated with violations of the Clean Air Act and the regulations thereunder. (Authorized Company Representative.)

[60 FR 34598, July 3, 1995, as amended at 64 FR 15244, Mar. 30, 1999]

§ 90.510 Compliance with acceptable quality level and passing and failing criteria for selective enforcement audits.

(a) The prescribed acceptable quality level is 40 percent.

(b) For Phase I engines, a failed engine is an engine whose final test results pursuant to § 90.509(b), for one or more of the applicable pollutants exceed the emission standard. For Phase 2 engines, a failed engine is an engine whose final deteriorated test results pursuant to § 90.509(b), for one or more of the applicable pollutants exceed the emission standard (FEL, if applicable).

(c) The manufacturer shall test engines comprising the test sample until a pass decision is reached for all pollutants or a fail decision is reached for one pollutant. A pass decision is reached when the cumulative number of failed engines, as defined in paragraph (b) of this section, for each pollutant is less than or equal to the pass decision number, as defined in paragraph (d) of this section, appropriate to the cumulative number of engines tested. A fail decision is reached when the cumulative number of failed engines for one or more pollutants is greater than or equal to the fail decision number, as defined in paragraph (d) of this section, appropriate to the cumulative number of engines tested.

(d) The pass and fail decision numbers associated with the cumulative number of engines tested are determined by using the tables in Appendix A to this subpart, ''Sampling Plans for Selective Enforcement Auditing of Small Nonroad Engines,'' appropriate to the projected sales as made by the manufacturer in its report to EPA under § 90.505(c)(1). In the tables in Appendix A to this subpart, sampling plan ''stage'' refers to the cumulative number of engines tested. Once a pass or fail decision has been made for a particular pollutant, the number of engines with final test results exceeding the emission standard for that pollutant shall not be considered any further for the purposes of the audit.

(e) Passing or failing of an SEA occurs when the decision is made on the last engine test required to make a decision under paragraph (c) of this section.

(f) The Administrator may terminate testing earlier than required in paragraph (c) of this section.

[60 FR 34598, July 3, 1995, as amended at 64 FR 15244, Mar. 30, 1999]

§ 90.511 Suspension and revocation of certificates of conformity.

(a) The certificate of conformity is suspended with respect to any engine failing pursuant to § 90.510(b) effective from the time that testing of that engine is completed.

(b) The Administrator may suspend the certificate of conformity for a family which does not pass an SEA, pursuant to paragraph § 90.510(c), based on the first test or all tests conducted on each engine. This suspension will not occur before ten days after failure of the audit.

(c) If the results of testing pursuant to these regulations indicate that engines of a particular family produced at one plant of a manufacturer do not conform to the regulations with respect to which the certificate of conformity was issued, the Administrator may suspend the certificate of conformity with respect to that family for engines manufactured by the manufacturer at all other plants.

(d) Notwithstanding the fact that engines described in the application may be covered by a certificate of conformity, the Administrator may suspend such certificate in whole or in part if the Administrator finds any one of the following infractions to be substantial:

(1) The manufacturer refuses to comply with the provisions of a test order issued by the Administrator under § 90.503.

(2) The manufacturer refuses to comply with any of the requirements of this subpart.

(3) The manufacturer submits false or incomplete information in any report or information provided to the Administrator under this subpart.

(4) The manufacturer renders inaccurate any test data submitted under this subpart.

(5) An EPA enforcement officer or EPA authorized representative is denied the opportunity to conduct activities related to entry and access as authorized in this subpart and a warrant or court order is presented to the manufacturer or the party in charge of a facility in question.

(6) An EPA enforcement officer or EPA authorized representative is unable to conduct activities related to entry and access as authorized in § 90.506 because a manufacturer has located a facility in a foreign jurisdiction where local law prohibits those activities.

(e) The Administrator shall notify the manufacturer in writing of any suspension or revocation of a certificate of conformity in whole or in part, except that the certificate is immediately suspended with respect to any failed engines as provided for in paragraph (a) of this section.

(f) The Administrator may revoke a certificate of conformity for a family when the certificate has been suspended pursuant to paragraph (b) or (c) of this section if the proposed remedy for the nonconformity, as reported by the manufacturer to the Administrator, is one requiring a design change or changes to the engine and/or emission control system as described in the application for certification of the affected family.

(g) Once a certificate has been suspended for a failed engine, as provided for in paragraph (a) of this section, the manufacturer shall take the following actions:

(1) Before the certificate is reinstated for that failed engine;

(i) Remedy the nonconformity; and

(ii) Demonstrate that the engine conforms to applicable standards by retesting the engine in accordance with these regulations.

(2) Submit a written report to the Administrator, after successful completion of testing on the failed engine, which contains a description of the remedy and test results for each engine in addition to other information that may be required by this regulation.

(h) Once a certificate for a failed family has been suspended pursuant to paragraph (b) or (c) of this section, the manufacturer shall take the following actions before the Administrator will consider reinstating the certificate:

(1) Submit a written report to the Administrator which identifies the reason for the noncompliance of the engines, describes the proposed remedy, including a description of any proposed quality control and/or quality assurance measures to be taken by the manufacturer to prevent future occurrences of the problem, and states the date on which the remedies will be implemented.

(2) Demonstrate that the engine family for which the certificate of conformity has been suspended does in fact comply with these regulations by testing engines selected from normal production runs of that engine family, at the plant(s), port facility(ies) or associated storage facility(ies) specified by the Administrator, in accordance with the conditions specified in the initial test order. If the manufacturer elects to continue testing individual engines after suspension of a certificate, the certificate is reinstated for an engine actually determined to be in conformance with the applicable standards through testing in accordance with the applicable test procedures, provided that the Administrator has not revoked the certificate pursuant to paragraph (f) of this section.

(i) Once the certificate has been revoked for a family and the manufacturer desires to continue introduction into commerce of a modified version of that family, the following actions shall be taken before the Administrator may consider issuing a certificate for that modified family:

(1) If the Administrator determines that the proposed change(s) in engine design may have an effect on emission performance deterioration, the Administrator shall notify the manufacturer, within five working days after receipt of the report in paragraph (f) of this section, whether subsequent testing under this subpart will be sufficient to evaluate the proposed change or changes or whether additional testing will be required; and

(2) After implementing the change or changes intended to remedy the nonconformity, the manufacturer shall demonstrate that the modified engine family does in fact conform with these regulations by testing engines selected from normal production runs of that modified engine family in accordance with the conditions specified in the initial test order. If the subsequent audit results in passing of the audit, the Administrator shall reissue the certificate or issue a new certificate, as the case may be, to include that family, provided that the manufacturer has satisfied the testing requirements of paragraph (i)(1) of this section. If the subsequent audit is failed, the revocation remains in effect. Any design change approvals under this subpart are limited to the family affected by the test order.

(j) At any time subsequent to an initial suspension of a certificate of conformity for a test engine pursuant to paragraph (a) of this section, but not later than 15 days or such other period as may be allowed by the Administrator after notification of the Administrator's decision to suspend or revoke a certificate of conformity in whole or in part pursuant to paragraphs (b), (c), or (f) of this section, a manufacturer may request a hearing as to whether the tests have been properly conducted or any sampling methods have been properly applied.

(k) Any suspension of a certificate of conformity under paragraph (d) of this section shall:

(1) Be made only after the manufacturer concerned has been offered an opportunity for a hearing conducted in accordance with §§ 90.512, 90.513, and 90.514 and

(2) Not apply to engines no longer in the possession of the manufacturer.

(l) After the Administrator suspends or revokes a certificate of conformity pursuant to this section and prior to the commencement of a hearing under § 90.512, if the manufacturer demonstrates to the Administrator's satisfaction that the decision to suspend, revoke, or void the certificate was based on erroneous information, the Administrator shall reinstate the certificate.

(m) To permit a manufacturer to avoid storing non-test engines when conducting an audit of a family subsequent to a failure of an SEA and while reauditing the failed family it may request that the Administrator conditionally reinstate the certificate for that family. The Administrator may reinstate the certificate subject to the condition that the manufacturer commits to recall all engines of that family produced from the time the certificate is conditionally reinstated if the family fails the subsequent audit at the level of the standard and to remedy any nonconformity at no expense to the owner.

§ 90.512 Request for public hearing.

(a) If the manufacturer disagrees with the Administrator's decision to suspend, revoke or void a certificate or disputes the basis for an automatic suspension pursuant to § 90.511(a), the manufacturer may request a public hearing.

(b) The manufacturer's request shall be filed with the Administrator not later than 15 days after the Administrator's notification of his or her decision to suspend, revoke or void, unless otherwise specified by the Administrator. The manufacturer shall simultaneously serve two copies of this request upon the Director of the Engine Programs and Compliance Division and file two copies with the Hearing Clerk of the Agency. Failure of the manufacturer to request a hearing within the time provided constitutes a waiver of the right to a hearing. Subsequent to the expiration of the period for requesting a hearing as of right, the Administrator may, in his or her discretion and for good cause shown, grant the manufacturer a hearing to contest the suspension, revocation or voiding.

(c) A manufacturer shall include in the request for a public hearing:

(1) A statement as to which engine configuration(s) within a family is to be the subject of the hearing;

(2) A concise statement of the issues to be raised by the manufacturer at the hearing, except that in the case of the hearing requested under § 90.511(j), the hearing is restricted to the following issues:

(i) Whether tests have been properly conducted (specifically, whether the tests were conducted in accordance with applicable regulations under this part and whether test equipment was properly calibrated and functioning);

(ii) Whether sampling plans have been properly applied (specifically, whether sampling procedures specified in Appendix A of this subpart were followed and whether there exists a basis for distinguishing engines produced at plants other than the one from which engines were selected for testing which would invalidate the Administrator's decision under § 90.511(c));

(3) A statement specifying reasons why the manufacturer believes it will prevail on the merits of each of the issues raised; and

(4) A summary of the evidence which supports the manufacturer's position on each of the issues raised.

(d) A copy of all requests for public hearings will be kept on file in the Office of the Hearing Clerk and will be made available to the public during Agency business hours.

[60 FR 34598, July 3, 1995, as amended at 64 FR 15245, Mar. 30, 1999]

§ 90.513 Administrative procedures for public hearing.

(a) The Presiding Officer shall be an Administrative Law Judge appointed pursuant to 5 U.S.C. 3105 (see also 5 CFR part 930 as amended).

(b) The Judicial Officer shall be an officer or employee of the Agency appointed as a Judicial Officer by the Administrator, pursuant to this section, who shall meet the qualifications and perform functions as follows:

(1) *Qualifications.* A Judicial Officer may be a permanent or temporary employee of the Agency who performs other duties for the Agency. The Judicial Officer shall not be employed by the Office of Enforcement or have any connection with the preparation or presentation of evidence for a hearing held pursuant to this subpart. The Judicial Officer shall be a graduate of an accredited law school and a member in good standing of a recognized Bar Association of any state or the District of Columbia.

(2) *Functions.* The Administrator may consult with the Judicial Officer or delegate all or part of the Administrator's authority to act in a given case under this section to a Judicial Officer, provided that this delegation does not preclude the Judicial Officer from referring any motion or case to the Administrator when the Judicial Officer determines such referral to be appropriate.

(c) For the purposes of this section, one or more Judicial Officers may be designated. As work requires, a Judicial Officer may be designated to act for the purposes of a particular case.

(d) *Summary decision.* (1) In the case of a hearing requested under § 90.511(j), when it clearly appears from the data and other information contained in the request for a hearing that no genuine and substantial question of fact exists with respect to the issues specified in § 90.512(c)(2), the Administrator shall enter an order denying the request for a hearing and reaffirming the original decision to suspend or revoke a certificate of conformity, if this decision has been made pursuant to § 90.511(e) at any time prior to the decision to deny the request for a hearing.

(2) In the case of a hearing requested under § 90.512 to challenge a proposed suspension of a certificate of conformity for the reasons specified in § 90.511(d), when it clearly appears from the data and other information contained in the request for the hearing that no genuine and substantial question of fact exists with respect to the issue of whether the refusal to comply with the provisions of a test order or any other requirement of § 90.503 was caused by conditions and circumstances outside the control of the manufacturer, the Administrator shall enter an order denying the request for a hearing and suspending the certificate of conformity.

(3) Any order issued under paragraph (d)(1) or (d)(2) of this section has the force and effect of a final decision of the Administrator, as issued pursuant to § 90.515.

(4) If the Administrator determines that a genuine and substantial question of fact does exist with respect to any of the issues referred to in paragraphs (d)(1) and (d)(2) of this section, the Administrator shall grant the request for a hearing and publish a notice

of public hearing in the FEDERAL REGISTER or by such other means as the Administrator finds appropriate to provide notice to the public.

(e) *Filing and service.* (1) An original and two copies of all documents or papers required or permitted to be filed pursuant to this section and § 90.512(c) must be filed with the Hearing Clerk of the Agency. Filing is considered timely if mailed, as determined by the postmark, to the Hearing Clerk within the time allowed by this section and § 90.512(b). If filing is to be accomplished by mailing, the documents must be sent to the address set forth in the notice of public hearing referred to in paragraph (d)(4) of this section.

(2) To the maximum extent possible, testimony will be presented in written form. Copies of written testimony will be served upon all parties as soon as practicable prior to the start of the hearing. A certificate of service will be provided on or accompany each document or paper filed with the Hearing Clerk. Documents to be served upon the Director of the Manufacturers Operations Division must be sent by registered mail to: Director, Manufacturers Operations Division, U.S. Environmental Protection Agency, 6405–J, 401 M St., SW., Washington, DC 20460. Service by registered mail is complete upon mailing.

(f) *Computation of time.* (1) In computing any period of time prescribed or allowed by this section, except as otherwise provided, the day of the act or event from which the designated period of time begins to run is not included. Saturdays, Sundays, and federal legal holidays are included in computing the period allowed for the filing of any document or paper, except that when the period expires on a Saturday, Sunday, or federal legal holiday, the period is extended to include the next following business day.

(2) A prescribed period of time within which a party is required or permitted to do an act is computed from the time of service, except that when service is accomplished by mail, three days will be added to the prescribed period.

(g) *Consolidation.* The Administrator or the Presiding Officer in his or her discretion may consolidate two or more proceedings to be held under this section for the purpose of resolving one or more issues whenever it appears that consolidation will expedite or simplify consideration of these issues. Consolidation does not affect the right of any party to raise issues that could have been raised if consolidation had not occurred.

(h) *Hearing date.* To the extent possible, hearings under § 90.512 will be scheduled to commence within 14 days of receipt of the application in § 90.512.

§ 90.514 Hearing procedures.

The procedures provided in § 86.1014–84 (i) to (s) apply for hearings requested pursuant to § 90.512, suspension, revocation, or voiding of a certificate of conformity.

§ 90.515 Appeal of hearing decision.

The procedures provided in § 86.1014–84 (t) to (aa) apply for appeals filed with respect to hearings held pursuant to § 90.514.

§ 90.516 Treatment of confidential information.

The provisions for treatment of confidential information described in § 90.4 apply to this subpart.

APPENDIX A TO SUBPART F OF PART 90—SAMPLING PLANS FOR SELECTIVE ENFORCEMENT AUDITING OF SMALL NONROAD ENGINES

TABLE 1—SAMPLING PLAN CODE LETTER

Annual engine family sales	Code letter
50–99	A
100–299	B
300–499	C
500 or greater	D

TABLE 2—SAMPLE PLAN FOR CODE LETTER "A"

[Sample inspection criteria]

Stage	Pass No.	Fail No.	Stage	Pass No.	Fail No.1
1	(1)	(2)	16	6	11
2	(1)	(2)	17	7	12

TABLE 2—SAMPLE PLAN FOR CODE LETTER "A"—Continued

[Sample inspection criteria]

Stage	Pass No.	Fail No.	Stage	Pass No.	Fail No.1
3	(1)	(2)	18	7	12
4	0	(2)	19	8	13
5	0	(2)	20	8	13
6	1	6	21	9	14
7	1	7	22	10	14
8	2	7	23	10	15
9	2	8	24	11	15
10	3	8	25	11	16
11	3	8	26	12	16
12	4	9	27	12	17
13	5	10	28	13	17
14	5	10	29	14	17
15	6	11	30	16	17

[1] Test sample passing not permitted at this stage.
[2] Test sample failure not permitted at this stage.

TABLE 3—SAMPLING PLAN FOR CODE LETTER "B"

[Sample Inspection Criteria]

Stage	Pass No.	Fail No.
1	(1)	(2)
2	(1)	(2)
3	(1)	(2)
4	(1)	(2)
5	0	(2)
6	1	6
7	1	7
8	2	7
9	2	8
10	3	8
11	3	9
12	4	9
13	4	10
14	5	10
15	5	11
16	6	12
17	6	12
18	7	13
19	8	13
10	8	14
21	9	14
22	9	15
23	10	15
24	10	16
25	11	16
26	11	17
27	12	17
28	12	18
29	13	18
30	13	19
31	14	19
32	14	20
33	15	20
34	16	21
35	16	21
36	17	22
37	17	22
38	18	22
39	18	22
40	21	22

[1] Test sample passing not permitted at this stage.
[2] Test sample failure not permitted at this stage.

TABLE 4—SAMPLING PLAN FOR CODE LETTER "C"

[Sample Inspection Criteria]

Stage	Pass No.	Fail No.
1	(1)	(2)
2	(1)	(2)
3	(1)	(2)
4	(1)	(2)
5	0	(2)
6	0	6
7	1	7
8	2	7
9	2	8
10	3	9
11	3	9
12	4	10
13	4	10
14	5	11
15	5	11
16	6	12
17	6	12
18	7	13
19	7	13
20	8	14
21	8	14
22	9	15
23	10	15
24	10	16
25	11	16
26	11	17
27	12	17
28	12	18
29	13	18
30	13	19
31	14	19
32	14	20
33	15	20
34	15	21
35	16	21
36	16	22
37	17	22
38	18	23
39	18	23
40	19	24
41	19	24
42	20	25
43	20	25
44	21	26
45	21	27
46	22	27

TABLE 4—SAMPLING PLAN FOR CODE LETTER "C"—Continued

[Sample Inspection Criteria]

Stage	Pass No.	Fail No.
47	22	27
48	23	27
49	23	27
50	26	27

[1] Test sample passing not permitted at this stage.
[2] Test sample failure not permitted at this stage.

TABLE 5—SAMPLING PLAN FOR CODE LETTER "D"

[Sample Inspection Criteria]

Stage	Pass No.	Fail No.
1	([1])	([2])
2	([1])	([2])
3	([1])	([2])
4	([1])	([2])
5	0	([2])
6	0	6
7	1	7
8	2	8
9	2	8
10	3	9
11	3	9
12	4	10
13	4	10
14	5	11
15	5	11
16	6	12
17	6	12
18	7	13
19	7	13
20	8	14
21	8	14
22	9	15
23	9	15
24	10	16
25	11	16
26	11	17
27	12	17
28	12	18
29	13	19
30	13	19
31	14	20
32	14	20
33	15	21
34	15	21
35	16	22
36	16	22
37	17	23
38	17	23
39	18	24
40	18	24
41	19	25
42	19	26
43	20	26
44	21	27
45	21	27
46	22	28
47	22	28
48	23	29
49	23	29
50	24	30
51	24	30
52	25	31
53	25	31
54	26	32

TABLE 5—SAMPLING PLAN FOR CODE LETTER "D"—Continued

[Sample Inspection Criteria]

Stage	Pass No.	Fail No.
55	26	32
56	27	33
57	27	33
58	28	33
59	28	33
60	32	33

[1] Test sample passing not permitted at this stage.
[2] Test sample failure not permitted at this stage.

Subpart G—Importation of Nonconforming Engines

§ 90.601 Applicability.

(a) Except where otherwise indicated, this subpart is applicable to engines and vehicles which are offered for importation or imported into the United States and for which the Administrator has promulgated regulations under subpart B of this part prescribing emission standards, but which are not covered by certificates of conformity issued under section 213 and section 206(a) of the Clean Air Act (that is, which are nonconforming engines as defined below) and under subpart B of this part at the time of importation or conditional importation, as applicable. Compliance with regulations under this subpart shall not relieve any person or entity from compliance with other applicable provisions of the Clean Air Act.

(b) Regulations prescribing further procedures for the importation of small SI engines into the Customs territory of the United States, as defined in 19 U.S.C. 1202, are set forth in U.S. Customs Service regulations.

§ 90.602 Definitions.

The definitions in subpart A of this part apply to this subpart. The following definitions also apply to this subpart.

Certificate of conformity. The document issued by the Administrator under section 213 and section 206(a) of the Act.

Nonconforming engine. An engine which is not covered by a certificate of conformity prior to final or conditional admission (or for which such coverage

has not been adequately demonstrated to EPA).

Original engine manufacturer (OEM). The entity which originally manufactured the engine.

Original production (OP) year. The calendar year in which the engine was originally produced by the OEM.

Original production (OP) years old. The age of an engine as determined by subtracting the original production year of the engine from the calendar year of importation.

Production changes. Those changes in the engine configuration, equipment or calibration which are made by an OEM in the course of engine production and required to be reported under § 90.123.

United States. United States includes the Customs territory of the United States as defined in 19 U.S.C. 1202, and the Virgin Islands, Guam, American Samoa and the Commonwealth of the Northern Mariana Islands.

§ 90.603 [Reserved]

§ 90.604 General requirements.

(a) A nonconforming engine offered for importation into the United States may only be imported for purposes other than resale under § 90.611, or under the provisions of § 90.612, provided that an exemption or exclusion is granted by the Administrator.

(b) Final admission shall not be granted unless:

(1) The engine is imported for purposes other than resale under § 90.611; or

(2) The engine is exempted or excluded under § 90.612.

(c) An engine offered for importation may be admitted into the United States. In order to obtain admission, the importer must submit to the Administrator a written request for approval containing the following:

(1) Identification of the importer and the importer's address, telephone number, and taxpayer identification number;

(2) Identification of the engine owner, the owner's address, telephone number, and taxpayer identification number;

(3) Identification of the engine including make, model, identification number, and original production year;

(4) Information indicating under what provision of these regulations the engine is to be imported;

(5) Identification of the place where the subject engine is to be stored until EPA approval of the importer's application to the Administrator for final admission;

(6) Authorization for EPA enforcement officers to conduct inspections or testing otherwise permitted by the Act or regulations thereunder; and

(7) Such other information as is deemed necessary by the Administrator.

§ 90.605–90.610 [Reserved]

§ 90.611 Importation for purposes other than resale.

(a) Any individual may import on a one-time basis three or fewer nonconforming engines for purposes other than resale. Such importation by individuals is permitted without modification to the engines and without prior written approval of EPA. Importations under this provision shall be made by completing such applications as required by the Administrator. Such applications shall contain:

(1) Identification of the importer of the engine and the importer's address, telephone number, and taxpayer identification number;

(2) Identification of the engine owner, the owner's address, telephone number, and taxpayer identification number;

(3) The number of engines imported under § 90.611 by the individual;

(4) A statement that the individual has not previously imported any engines under § 90.611;

(5) A statement that the individual is not importing the engines for the purpose of resale;

(6) For each engine imported, identification of the engine including make, model, identification number, and original production year;

(7) Information indicating under what provision of these regulations the engine is to be imported;

(8) Authorization for EPA enforcement officers to conduct inspections permitted by the Act or regulations thereunder;

(9) Such other information as is deemed necessary by the Administrator.

(b) EPA will not require a U.S. Customs Service bond for a nonconforming engine which is imported under § 90.611.

§ 90.612 Exemptions and exclusions.

(a) Individuals shall be eligible for importing engines into the United States under the provisions of this section, unless otherwise specified.

(b) Notwithstanding other requirements of this subpart, an engine entitled to one of the temporary exemptions of this paragraph may be conditionally admitted into the United States if prior written approval for the conditional admission is obtained from the Administrator. Conditional admission is to be under U.S. Customs Service bond. The Administrator may request that the U.S. Customs Service require a specific bond amount to ensure compliance with the requirements of the Act and this subpart. A written request for approval from the Administrator is to contain the identification required in § 90.604(c) and information that demonstrates that the importer is entitled to the exemption. Noncompliance with provisions of this section may result in the forfeiture of the total amount of the bond or exportation of the engine. The following temporary exemptions are permitted by this paragraph:

(1) *Exemption for repairs or alterations.* Upon written approval by EPA, an owner of engines may conditionally import under bond such engines solely for purpose of repair(s) or alteration(s). The engines may not be operated in the United States other than for the sole purpose of repair or alteration. They may not be sold or leased in the United States and are to be exported upon completion of the repair(s) or alteration(s).

(2) *Testing exemption.* A test engine may be conditionally imported by a person subject to the requirements of § 90.905. A test engine may be operated in the United States provided that the operation is an integral part of the test. This exemption is limited to a period not exceeding one year from the date of importation unless a request is made by the appropriate importer concerning the engine in accordance with § 90.905(f) for a subsequent one-year period.

(3) *Display exemptions.*

(i) An engine intended solely for display may be conditionally imported subject to the requirements of § 90.907.

(ii) A display engine may be imported by any person for purposes related to a business or the public interest. Such purposes do not include collections normally inaccessible or unavailable to the public on a daily basis, display of an engine at a dealership, private use, or other purpose that the Administrator determines is not appropriate for display exemptions. A display engine may not be sold in the United States and may not be operated in the United States except for the operation incident and necessary to the display purpose.

(iii) A temporary display exemption will be granted for 12 months (one year) or for the duration of the display purpose, whichever is shorter. Two extensions of up to 12 months (one year) each are available upon approval by the Administrator. In no circumstances, however, may the total period of exemption exceed 36 months (three years).

(c) Notwithstanding any other requirement of this subpart, an engine may be finally admitted into the United States under this paragraph if prior written approval for such final admission is obtained from the Administrator. Conditional admission of these engines under this subpart is not permitted for the purpose of obtaining such written approval from the Administrator. A request for approval is to contain the identification information required in § 90.604(c) and information that demonstrates that the importer is entitled to the exemption or exclusion. The following exemptions or exclusions are permitted by this paragraph:

(1) *National security exemption.* An engine may be imported under the national security exemption found at § 90.908.

(2) *Hardship exemption.* The Administrator may exempt on a case-by-case basis an engine from federal emission requirements to accommodate unforeseen cases of extreme hardship or extraordinary circumstances.

(3) *Exemption for engines identical to United States certified versions.*

(i) A person (including businesses) is eligible for importing an engine into the United States under the provisions of this paragraph. An exemption will be granted if the engine:

(A) is owned by the importer;

(B) is not offered for importation for the purpose of resale; and

(C) is proven to be identical, in all material respects, to an engine certified by the original equipment manufacturer (OEM) for sale in the United States or is proven to have been modified to be identical, in all material respects, to an engine certified by the OEM for sale in the United States according to complete written instructions provided by the OEM's United States representative, or his/her designee.

(ii) *Proof of Conformity*. (A) Documentation submitted pursuant to this section for the purpose of proving conformity of individual engines is to contain sufficiently organized data or evidence demonstrating that the engine identified pursuant to § 90.604(c) is identical, in all material respects, to an engine identified in an OEM's application for certification.

(B) If the documentation does not contain all the information required by this part, or is not sufficiently organized, EPA will notify the importer of any areas of inadequacy, and that the documentation will not receive further consideration until the required information or organization is provided.

(C) If EPA determines that the documentation does not clearly or sufficiently demonstrate that an engine is eligible for importation, EPA will notify the importer in writing.

(D) If EPA determines that the documentation clearly and sufficiently demonstrates that an engine is eligible for importation, EPA will grant approval for importation and notify the importer in writing.

(d) Foreign diplomatic and military personnel may import a nonconforming engine without bond. At the time of admission, the importer shall submit to the Administrator the written report required in § 90.604(a) and a statement from the U.S. Department of State confirming qualification for this exemption. Foreign military personnel may, in lieu of a statement from the U.S. Department of State, submit to the Administrator a copy of their orders for duty in the United States. The engine may not be sold in the United States and must be exported if the individual's diplomatic status is no longer applicable, as determined by the Department of State, or the foreign military orders for duty in the United States are no longer applicable, unless subsequently brought into conformity with U.S. emission requirements.

(e) *Competition exclusion*. A nonconforming engine may be conditionally admitted by any person provided the importer demonstrates to the Administrator that the engine is used to propel a nonroad vehicle used solely for competition and obtains prior written approval from the Administrator. A nonconforming engine imported pursuant to this paragraph may not be operated in the United States except for that operation incident and necessary for the competition purpose, unless subsequently brought into conformity with United States emission requirements in accordance with § 90.612(c)(3).

(f) *Exclusions/exemptions based on date of original manufacture*. (1) Notwithstanding any other requirements of this subpart, engines originally manufactured prior to model year 1997 are excluded from the requirements of the Act in accordance with section 213 of the Act and may be imported by any person.

(2) Notwithstanding other requirements of this subpart, an engine not subject to an exclusion under § 90.612(f)(1) but greater than 20 original production (OP) years old is entitled to an exemption from the requirements of the Act, provided that it has not been modified in those 20 OP years. At the time of admission, the importer shall submit to the Administrator the written report required in § 90.604(c).

(g) Applications for exemptions and exclusions provided for in paragraphs (b), (c), and (e) of this section are to be mailed to: U.S. Environmental Protection Agency, Office of Mobile Sources, Engine Compliance Programs Group (6403–J), Washington, DC 20460, Attention: Imports.

[60 FR 34598, July 3, 1995, as amended at 64 FR 15245, Mar. 30, 1999]

§ 90.613 Prohibited acts; penalties.

(a) The importation of an engine which is not covered by a certificate of conformity other than in accordance with this subpart and the entry regulations of the U.S. Customs Service is prohibited. Failure to comply with this subpart is a violation of section 213(d) and section 203 of the Act.

(b) Unless otherwise permitted by this subpart, during a period of conditional admission, the importer of an engine shall not:

(1) Register, license, or operate the engine in the United States; or

(2) Sell or offer the engine for sale.

(c) An engine conditionally admitted pursuant to § 90.612(b), (d), or (e) and not granted final admission within the period of time specified for such conditional admission in the written prior approval obtained from EPA, or within such additional time as designated by the Administrator, is deemed to be unlawfully imported into the United States in violation of section 213(d) and section 203 of the Act, unless the engine has been delivered to the U.S. Customs Service for export or other disposition under applicable Customs laws and regulations. An engine not so delivered is subject to seizure by the U.S. Customs Service.

(d) An importer who violates section 213(d) and section 203 of the Act is subject to a civil penalty under section 205 of the Act of not more than $25,000 for each engine subject to the violation. In addition to the penalty provided in the Act, where applicable, under the exemption provisions of § 90.612(b), a person or entity who fails to deliver the engine to the U.S. Customs Service is liable for liquidated damages in the amount of the bond required by applicable Customs laws and regulations.

§ 90.614 Treatment of confidential information.

The provisions for treatment of confidential information described in § 90.4 apply to this subpart.

Subpart H—Manufacturer Production Line Testing Program

SOURCE: 64 FR 15245, Mar. 30, 1999, unless otherwise noted.

§ 90.701 Applicability.

(a) The requirements of this subpart are applicable to all Phase 2 nonroad handheld and nonhandheld engines families subject to the provisions of subpart A of this part unless otherwise exempted in this subpart.

(b) The procedures described in this subpart are optional for small volume engine manufacturers and small volume engine families as defined in this part. Small volume engine manufacturers and small volume engine families for which the manufacturer opts not to conduct testing under this subpart pursuant to this paragraph shall remain subject to the Selective Enforcement Auditing procedures of subpart F of this part.

(c) Engine families for which the manufacturer opts to conduct in-use testing pursuant to subpart M of this part are exempt from this subpart, but shall remain subject to the Selective Enforcement Auditing procedures of subpart F of this part.

[64 FR 15245, Mar. 30, 1999, as amended at 65 FR 24313, Apr. 25, 2000

§ 90.702 Definitions.

The definitions in subpart A of this part apply to this subpart. The following definitions also apply to this subpart.

Configuration means any subclassification of an engine family which can be described on the basis of gross power, emission control system, governed speed, injector size, engine calibration, and other parameters as designated by the Administrator.

Test sample means the collection of engines selected from the population of an engine family for emission testing.

§ 90.703 Production line testing by the manufacturer.

(a) Manufacturers of small SI engines shall test production line engines from each engine family according to the provisions of this subpart.

(b) Production line engines must be tested using the test procedure specified in subpart E of this part except that the Administrator may approve minor variations that the Administrator deems necessary to facilitate efficient and economical testing where

the manufacturer demonstrates to the satisfaction of the Administrator that such variations will not significantly impact the test results. Any adjustable engine parameter must be set to values or positions that are within the range recommended to the ultimate purchaser, unless otherwise specified by the Administrator. The Administrator may specify values within or without the range recommended to the ultimate purchaser.

§ 90.704 Maintenance of records; submission of information.

(a) The manufacturer of any new small SI engine subject to any of the provisions of this subpart must establish, maintain, and retain the following adequately organized and indexed records:

(1) *General records.* A description of all equipment used to test engines in accordance with § 90.703. Subpart D of this part sets forth relevant equipment requirements in §§ 90.304, 90.305, 90.306, 90.307, 90.308, 90.309, 90.310 and 90.313.

(2) *Individual records.* These records pertain to each production line test conducted pursuant to this subpart and include:

(i) The date, time, and location of each test;

(ii) The number of hours of service accumulated on the test engine when the test began and ended;

(iii) The names of all supervisory personnel involved in the conduct of the production line test;

(iv) A record and description of any adjustment, repair, preparation or modification performed prior to and/or subsequent to approval by the Administrator pursuant to § 90.707(b)(1), giving the date, associated time, justification, name(s) of the authorizing personnel, and names of all supervisory personnel responsible for the conduct of the repair;

(v) If applicable, the date the engine was shipped from the assembly plant, associated storage facility or port facility, and the date the engine was received at the testing facility;

(vi) A complete record of all emission tests performed pursuant to this subpart (except tests performed directly by EPA), including all individual worksheets and/or other documentation relating to each test, or exact copies thereof, in accordance with the record requirements specified in §§ 90.405 and 90.406; and

(vii) A brief description of any significant events during testing not otherwise described under paragraph (a)(2) of this section, commencing with the test engine selection process and including such extraordinary events as engine damage during shipment.

(3) The manufacturer must establish, maintain and retain general records, pursuant to paragraph (a)(1) of this section, for each test cell that can be used to perform emission testing under this subpart.

(b) The manufacturer must retain all records required to be maintained under this subpart for a period of one year after completion of all testing required for the engine family in a model year. Records may be retained as hard copy (i.e., on paper) or reduced to microfilm, floppy disk, or some other method of data storage, depending upon the manufacturer's record retention procedure; provided, that in every case, all the information contained in the hard copy is retained.

(c) The manufacturer must, upon request by the Administrator, submit the following information with regard to engine production:

(1) Projected production or actual production for each engine configuration within each engine family for which certification has been requested and/or approved;

(2) Number of engines, by configuration and assembly plant, scheduled for production or actually produced.

(d) Nothing in this section limits the Administrator's discretion to require a manufacturer to establish, maintain, retain or submit to EPA information not specified by this section and otherwise permitted by law.

(e) All reports, submissions, notifications, and requests for approval made under this subpart must be addressed to: Manager, Engine Compliance Programs Group (6403J), U.S. Environmental Protection Agency, Washington, DC 20460.

(f) The manufacturer must electronically submit the results of its production line testing using EPA's standardized format. The Administrator may

exempt manufacturers from this requirement upon written request with supporting justification.

§ 90.705 Right of entry and access.

(a) To allow the Administrator to determine whether a manufacturer is complying with the provisions of this subpart or other subparts of this part, one or more EPA enforcement officers may enter during operating hours and upon presentation of credentials any of the following places:

(1) Any facility, including ports of entry, where any engine to be introduced into commerce or any emission-related component is manufactured, assembled, or stored;

(2) Any facility where any test conducted pursuant to this or any other subpart or any procedure or activity connected with such test is or was performed;

(3) Any facility where any test engine is present; and

(4) Any facility where any record required under § 90.704 or other document relating to this subpart or any other subpart of this part is located.

(b) Upon admission to any facility referred to in paragraph (a) of this section, EPA enforcement officers are authorized to perform the following inspection-related activities:

(1) To inspect and monitor any aspect of engine manufacture, assembly, storage, testing and other procedures, and to inspect and monitor the facilities in which these procedures are conducted;

(2) To inspect and monitor any aspect of engine test procedures or activities, including test engine selection, preparation and service accumulation, emission test cycles, and maintenance and verification of test equipment calibration;

(3) To inspect and make copies of any records or documents related to the assembly, storage, selection, and testing of an engine; and

(4) To inspect and photograph any part or aspect of any engine and any component used in the assembly thereof that is reasonably related to the purpose of the entry.

(c) EPA enforcement officers are authorized to obtain reasonable assistance without cost from those in charge of a facility to help the officers perform any function listed in this subpart and they are authorized to request the manufacturer to make arrangements with those in charge of a facility operated for the manufacturer's benefit to furnish reasonable assistance without cost to EPA.

(1) Reasonable assistance includes, but is not limited to, clerical, copying, interpretation and translation services; the making available on an EPA enforcement officer's request of personnel of the facility being inspected during their working hours to inform the EPA enforcement officer of how the facility operates and to answer the officer's questions; and the performance on request of emission tests on any engine which is being, has been, or will be used for production line or other testing.

(2) By written request, signed by the Assistant Administrator for Air and Radiation, and served on the manufacturer, a manufacturer may be compelled to cause the personal appearance of any employee at such a facility before an EPA enforcement officer. Any such employee who has been instructed by the manufacturer to appear will be entitled to be accompanied, represented, and advised by counsel.

(d) EPA enforcement officers are authorized to seek a warrant or court order authorizing the EPA enforcement officers to conduct the activities authorized in this section, as appropriate, to execute the functions specified in this section. EPA enforcement officers may proceed *ex parte* to obtain a warrant or court order whether or not the EPA enforcement officers first attempted to seek permission from the manufacturer or the party in charge of the facility(ies) in question to conduct the activities authorized in this section.

(e) A manufacturer must permit an EPA enforcement officer(s) who presents a warrant or court order to conduct the activities authorized in this section as described in the warrant or court order. The manufacturer must also cause those in charge of its facility or a facility operated for its benefit to permit entry and access as authorized in this section pursuant to a warrant or court order whether or not the manufacturer controls the facility. In

the absence of a warrant or court order, an EPA enforcement officer(s) may conduct the activities authorized in this section only upon the consent of the manufacturer or the party in charge of the facility(ies) in question.

(f) It is not a violation of this part or the Clean Air Act for any person to refuse to permit an EPA enforcement officer(s) to conduct the activities authorized in this section if the officer(s) appears without a warrant or court order.

(g) A manufacturer is responsible for locating its foreign testing and manufacturing facilities in jurisdictions where local law does not prohibit an EPA enforcement officer(s) from conducting the entry and access activities specified in this section. EPA will not attempt to make any inspections which it has been informed local foreign law prohibits.

§ 90.706 Engine sample selection.

(a) At the start of each model year, the small SI engine manufacturer will begin to randomly select engines from each engine family for production line testing at a rate of one percent of the projected production of that family. Each engine will be selected from the end of the assembly line.

(1) *For newly certified engine families:* After two engines are tested, the manufacturer will calculate the required sample size for the model year for each pollutant ($HC+NO_X$($NMHC+NO_X$) and CO) according to the Sample Size Equation in paragraph (b) of this section.

(2) *For carry-over engine families:* After one engine is tested, the manufacturer will combine the test with the last test result from the previous model year and then calculate the required sample size for the model year for each pollutant according to the Sample Size Equation in paragraph (b) of this section.

(b)(1) Manufacturers will calculate the required sample size for the model year for each pollutant for each engine family using the Sample Size Equation in this paragraph. N is calculated for each pollutant from each test result. The higher of the two values for the number N indicates the number of tests required for the model year for an engine family. N is recalculated for each pollutant after each test. Test results used to calculate the variables in the following Sample Size Equation must be final deteriorated test results as specified in § 90.709(c).

$$N = \left[\frac{\left(t_{95} * \sigma\right)^2}{\left(x - FEL\right)} \right] + 1$$

Where:

N = required sample size for the model year.

$_{95}$ = 95% confidence coefficient. It is dependent on the actual number of tests completed, n, as specified in the table in paragraph (b)(2) of this section. It defines one-tail, 95% confidence intervals.

σ = actual test sample standard deviation calculated from the following equation:

$$\sigma = \sqrt{\frac{\sum \left(X_i - x\right)^2}{n - 1}}$$

x_i = emission test result for an individual engine.

x = mean of emission test results of the actual sample.

FEL = Family Emission Limit or standard if no FEL.

n = The actual number of tests completed in an engine family.

(2) The following table specifies the Actual Number of Tests (n) & 1-tail Confidence Coefficients (t_{95}):

n	t_{95}	n	t_{95}	n	t_{95}
2	6.31	12	1.80	22	1.72
3	2.92	13	1.78	23	1.72

n	t_{95}	n	t_{95}	n	t_{95}
4	2.35	14	1.77	24	1.71
5	2.13	15	1.76	25	1.71
6	2.02	16	1.75	26	1.71
7	1.94	17	1.75	27	1.71
8	1.90	18	1.74	28	1.70
9	1.86	19	1.73	29	1.70
10	1.83	20	1.73	30	1.70
11	1.81	21	1.72	∞	1.645

(3) A manufacturer must distribute the testing of the remaining number of engines needed to meet the required sample size N, evenly throughout the remainder of the model year.

(4) After each new test, the required sample size, N, is recalculated using updated sample means, sample standard deviations and the appropriate 95% confidence coefficient.

(5) A manufacturer must continue testing and updating each engine family's sample size calculations according to paragraphs (b)(1) through (b)(4) of this section until a decision is made to stop testing as described in paragraph (b)(6) of this section or a noncompliance decision is made pursuant to § 90.710(b).

(6) If, at any time throughout the model year, the calculated required sample size, N, for an engine family is less than or equal to the actual sample size, n, and the sample mean, x, for HC + NO_X (NMHC+NO_X) and CO is less than or equal to the FEL or standard if no FEL, the manufacturer may stop testing that engine family.

(7) If, at any time throughout the model year, the sample mean, x, for HC + NO_X (NMHC+NO_X) or CO is greater than the FEL or standard if no FEL, the manufacturer must continue testing that engine family at the appropriate maximum sampling rate.

(8) The maximum required sample size for an engine family (regardless of the required sample size, N, as calculated in paragraph (b)(1) of this section) is the lesser of thirty tests per model year or one percent of projected annual production for that engine family for that model year.

(9) Manufacturers may elect to test additional engines. Additional engines, whether tested in accordance with the testing procedures specified in § 90.707 or not, may not be included in the Sample Size and Cumulative Sum equation calculations as defined in paragraph (b)(1) of this section and § 90.708(a), respectively. However, such additional test results may be used as appropriate to ''bracket'' or define the boundaries of the production duration of any emission nonconformity determined under this subpart. Such additional test data must be identified and provided to EPA with the submittal of the official CumSum results.

(c) The manufacturer must produce and assemble the test engines using its normal production and assembly process for engines to be distributed into commerce.

(d) No quality control, testing, or assembly procedures shall be used on any test engine or any portion thereof, including parts and subassemblies, that have not been or will not be used during the production and assembly of all other engines of that family, unless the Administrator approves the modification in production or assembly procedures in advance.

[64 FR 15245, Mar. 30, 1999; 64 FR 34313, June 25, 1999; 64 FR 35256, June 30, 1999; 64 FR 36423, July 6, 1999]

§ 90.707 Test procedures.

(a)(1) For small SI engines subject to the provisions of this subpart, the prescribed test procedures are specified in subpart E of this part.

(2) The Administrator may, on the basis of a written application by a manufacturer, prescribe test procedures other than those specified in paragraph (a)(1) of this section for any small SI engine the Administrator determines is not susceptible to satisfactory testing using procedures specified in paragraph (a)(1) of this section.

(b)(1) The manufacturer may not adjust, repair, prepare, or modify any test engine and may not perform any emission test on any test engine unless

this adjustment, repair, preparation, modification and/or test is documented in the manufacturer's engine assembly and inspection procedures and is actually performed by the manufacturer on every production line engine or unless this adjustment, repair, preparation, modification and/or test is required or permitted under this subpart or is approved in advance by the Administrator.

(2) The Administrator may adjust or cause to be adjusted any engine parameter which the Administrator has determined to be subject to adjustment for certification, Production Line Testing and Selective Enforcement Audit testing, to any setting within the physically adjustable range of that parameter, as determined by the Administrator, prior to the performance of any test. However, if the idle speed parameter is one which the Administrator has determined to be subject to adjustment, the Administrator may not adjust it or require that it be adjusted to any setting which causes a lower engine idle speed than would have been possible within the physically adjustable range of the idle speed parameter if the manufacturer had accumulated 12 hours of service on the engine under paragraph (c) of this section, all other parameters being identically adjusted for the purpose of the comparison. The manufacturer may be requested to supply information necessary to establish an alternate minimum idle speed. The Administrator, in making or specifying these adjustments, may consider the effect of the deviation from the manufacturer's recommended setting on emission performance characteristics as well as the likelihood that similar settings will occur on in-use engines. In determining likelihood, the Administrator may consider factors such as, but not limited to, the effect of the adjustment on engine performance characteristics and information from similar in-use engines.

(c) *Service accumulation.* (1) Unless otherwise approved by the Administrator, prior to performing exhaust emission production line testing, the manufacturer may accumulate up to 12 hours of service on each test engine. For catalyst-equipped engines, the manufacturer must accumulate a number of hours equal to the number of hours accumulated to represent stabilized emissions on the engine used to obtain certification.

(2) Service accumulation must be performed in a manner using good engineering judgment to obtain emission results representative of production line engines.

(d) Unless otherwise approved by the Administrator, the manufacturer may not perform any maintenance on test engines after selection for testing.

(e) If an engine is shipped to a remote facility for production line testing, and an adjustment or repair is necessary because of shipment, the engine manufacturer must perform the necessary adjustment or repair only after the initial test of the engine, except in cases where the Administrator has determined that the test would be impossible or unsafe to perform or would permanently damage the engine. Engine manufacturers must report to the Administrator, in the quarterly report required by § 90.709(e), all adjustments or repairs performed on test engines prior to each test.

(f) If an engine cannot complete the service accumulation or an emission test because of a malfunction, the manufacturer may request that the Administrator authorize either the repair of that engine or its deletion from the test sequence.

(g) *Testing.* A manufacturer must test engines with the test procedure specified in subpart E of this part to demonstrate compliance with the applicable FEL (or standard where there is no FEL). If alternate or special test procedures pursuant to regulations at § 90.120 are used in certification, then those alternate procedures must be used in production line testing.

(h) *Retesting.* (1) If an engine manufacturer reasonably determines that an emission test of an engine is invalid because of a procedural error, test equipment problem, or engine performance problem that causes the engine to be unable to safely perform a valid test, the engine may be retested. A test is not invalid simply because the emission results are high relative to other engines of the family. Emission results from all tests must be reported to EPA.

The engine manufacturer must also include a detailed explanation of the reasons for invalidating any test in the quarterly report required in § 90.709(e). If a test is invalidated because of an engine performance problem, the manufacturer must document in detail the nature of the problem and the repairs performed in order to use the after-repair test results for the original test results.

(2) Routine retests may be conducted if the manufacturer conducts the same number of tests on all engines in the family. The results of these tests must be averaged according to procedures of § 90.709.

§ 90.708 Cumulative Sum (CumSum) procedure.

(a) (1) Manufacturers must construct separate CumSum Equations for each regulated pollutant ($HC+NO_X$ ($NMHC+NO_X$) and CO) for each engine family. Test results used to calculate the variables in the CumSum Equations must be final deteriorated test results as defined in § 90.709(c). The CumSum Equation is constructed as follows:

$$C_i = \max[0\ 0R\ (C_i\text{-}\mathbf{1} + X_i - (FEL + F))]$$

Where:

C_i=The current CumSum statistic.

C_{i-1}=The previous CumSum statistic. Prior to any testing, the CumSum statistic=0 (i.e. C_0=0).

X_i=The current emission test result for an individual engine.

FEL=Family Emission Limit (the standard if no FEL).

F=.25×σ.

(2) After each test pursuant to paragraph (a)(1) of this section, C_i is compared to the action limit, H, the quantity which the CumSum statistic must exceed, in two consecutive tests, before the engine family may be determined to be in noncompliance for a regulated pollutant for purposes of § 90.710.

Where:

H=The Action Limit. It is 5.0×σ, and is a function of the standard deviation, σ.

σ=is the sample standard deviation and is recalculated after each test.

(b) After each engine is tested, the CumSum statistic shall be promptly updated according to the CumSum Equation in paragraph (a) of this section.

(c)(1) If, at any time during the model year, a manufacturer amends the application for certification for an engine family as specified in § 90.122(a) by performing an engine family modification (i.e. a change such as a running change involving a physical modification to an engine, a change in specification or setting, the addition of a new configuration, or the use of a different deterioration factor) with no changes to the FEL (where applicable), all previous sample size and CumSum statistic calculations for the model year will remain unchanged.

(2) If, at any time during the model year, a manufacturer amends the application for certification for an engine family as specified in § 90.122 (a) by modifying its FEL (where applicable) for future production, as a result of an engine family modification, the manufacturer must continue its calculations by inserting the new FEL into the sample size equation as specified in § 90.706(b)(1) and into the CumSum equation in paragraph (a) of this section. All previous calculations remain unchanged. If the sample size calculation indicates that additional tests are required, then those tests must be performed. CumSum statistic calculations must not indicate that the family has exceeded the action limit for two consecutive tests. Where applicable, the manufacturer's final credit report as required by § 90.210 must break out the credits that result from each FEL and corresponding CumSum analysis for the set of engines built to each FEL.

(3) If, at any time during the model year, a manufacturer amends the application for certification for an engine family as specified in § 90.122 (a) (or for an affected part of the year's production in cases where there were one or more mid-year engine family modifications), by modifying its FEL (where applicable) for past and/or future production, without performing an engine modification, all previous sample size and CumSum statistic calculations for the model year must be recalculated using the new FEL. If the sample size calculation indicates that additional tests are required, then those tests must be performed. The CumSum statistic recalculation must not indicate that the family has exceeded the action

limit for two consecutive tests. Where applicable, the manufacturer's final credit report as required by § 90.210 must break out the credits that result from each FEL and corresponding CumSum analysis for the set of engines built to each FEL.

§ 90.709 Calculation and reporting of test results.

(a) Initial test results are calculated following the applicable test procedure specified in § 90.707 (a). The manufacturer rounds these results to the number of decimal places contained in the applicable emission standard expressed to one additional significant figure.

(b) Final test results are calculated by summing the initial test results derived in paragraph (a) of this section for each test engine, dividing by the number of tests conducted on the engine, and rounding to the same number of decimal places contained in the applicable standard expressed to one additional significant figure.

(c) The final deteriorated test results for each test engine are calculated by applying the appropriate deterioration factors, derived in the certification process for the engine to the final test results, and rounding to the same number of decimal places contained in the applicable standard.

(d) If, at any time during the model year, the CumSum statistic exceeds the applicable action limit, H, in two consecutive tests for any regulated pollutant, ($HC+NO_X$ ($NMHC+NO_X$) or CO) the engine family may be determined to be in noncompliance and the manufacturer must notify EPA by contacting its official EPA certification representative within ten working days of such exceedance by the CumSum statistic.

(e) Within 45 calendar days of the end of each quarter, each engine manufacturer must submit to the Administrator a report which includes the following information:

(1) The location and description of the manufacturer's or other's exhaust emission test facilities which were utilized to conduct testing reported pursuant to this section;

(2) Total production and sample sizes, N and n, for each engine family;

(3) The FEL (standard, if no FEL) against which each engine family was tested;

(4) A description of the process to obtain engines on a random basis;

(5) A description of the test engines;

(6) For each test conducted:

(i) A description of the test engine, including:

(A) Configuration and engine family identification;

(B) Year, make, and build date;

(C) Engine identification number; and

(D) Number of hours of service accumulated on engine prior to testing;

(ii) Location where service accumulation was conducted and description of accumulation procedure and schedule;

(iii) Test number, date, test procedure used, initial test results before and after rounding, final test results before and after rounding and final deteriorated test results for all exhaust emission tests, whether valid or invalid, and the reason for invalidation, if applicable;

(iv) A complete description of any adjustment, modification, repair, preparation, maintenance, and/or testing which was performed on the test engine, was not reported pursuant to any other paragraph of this subpart, and will not be performed on all other production engines;

(v) A CumSum analysis, as required in § 90.708, of the production line test results for each engine family; and

(vi) Any other information the Administrator may request relevant to the determination whether the new engines being manufactured by the manufacturer do in fact conform with the regulations with respect to which the certificate of conformity was issued;

(7) For each failed engine as defined in § 90.710(a), a description of the remedy and test results for all retests as required by § 90.711(g);

(8) The date of the end of the engine manufacturer's model year production for each engine family; and

(9) The following signed statement and endorsement by an authorized representative of the manufacturer:

This report is submitted pursuant to Sections 213 and 208 of the Clean Air Act. This

production line testing program was conducted in complete conformance with all applicable regulations under 40 CFR Part 90. No emission-related changes to production processes or quality control procedures for the engine family tested have been made during this production line testing program that affect engines from the production line. All data and information reported herein is, to the best of (Company Name) knowledge, true and accurate. I am aware of the penalties associated with violations of the Clean Air Act and the regulations thereunder. (Authorized Company Representative.)

§ 90.710 Compliance with criteria for production line testing.

(a) A failed engine is one whose final deteriorated test results pursuant to § 90.709(c), for $HC+NO_X$ ($NMHC+NO_X$) or CO exceeds the applicable Family Emission Limit (FEL) or standard if no FEL.

(b) An engine family shall be determined to be in noncompliance, if at any time throughout the model year, the CumSum statistic, C_i, for $HC+NO_X$ ($NMHC+NO_X$) or CO, is greater than the action limit, H, for that pollutant, for two consecutive tests.

§ 90.711 Suspension and revocation of certificates of conformity.

(a) The certificate of conformity is suspended with respect to any engine failing pursuant to § 90.710(a) effective from the time that testing of that engine is completed.

(b) The Administrator may suspend the certificate of conformity for an engine family which is determined to be in noncompliance pursuant to § 90.710(b). This suspension will not occur before thirty days after the engine family is determined to be in noncompliance and the Administrator has notified the manufacturer of its intent to suspend. During this thirty day period the Administrator will work with the manufacturer to achieve appropriate production line changes to avoid the need to halt engine production, if possible. The Administrator will approve or disapprove any such production line changes proposed to address a family that has been determined to be in noncompliance under this subpart within 15 days of receipt. If the Administrator does not approve or disapprove such a proposed change within such time period, the proposed change shall be considered approved.

(c) If the results of testing pursuant to the regulations in this subpart indicate that engines of a particular family produced at one plant of a manufacturer do not conform to the regulations in this part with respect to which the certificate of conformity was issued, the Administrator may suspend the certificate of conformity with respect to that family for engines manufactured by the manufacturer at all other plants.

(d) Notwithstanding the fact that engines described in the application for certification may be covered by a certificate of conformity, the Administrator may suspend such certificate immediately in whole or in part if the Administrator finds any one of the following infractions to be substantial:

(1) The manufacturer refuses to comply with any of the requirements of this subpart.

(2) The manufacturer submits false or incomplete information in any report or information provided to the Administrator under this subpart.

(3) The manufacturer renders inaccurate any test data submitted under this subpart.

(4) An EPA enforcement officer is denied the opportunity to conduct activities authorized in this subpart and a warrant or court order is presented to the manufacturer or the party in charge of the facility in question.

(5) An EPA enforcement officer is unable to conduct activities authorized in § 90.705 because a manufacturer has located its facility in a foreign jurisdiction where local law prohibits those activities.

(e) The Administrator shall notify the manufacturer in writing of any suspension or revocation of a certificate of conformity in whole or in part, except that the certificate is immediately suspended with respect to any failed engines as provided for in paragraph (a) of this section.

(f) The Administrator may revoke a certificate of conformity for an engine family after the certificate has been suspended pursuant to paragraph (b) or (c) of this section if the proposed remedy for the nonconformity, as reported

by the manufacturer to the Administrator, is one requiring a design change or changes to the engine and/or emission control system as described in the application for certification of the affected engine family.

(g) Once a certificate has been suspended for a failed engine, as provided for in paragraph (a) of this section, the manufacturer must take the following actions before the certificate is reinstated for that failed engine:

(1) Remedy the nonconformity;

(2) Demonstrate that the engine conforms to the applicable standards (FELs, where applicable) by retesting the engine in accordance with these regulations; and

(3) Submit a written report to the Administrator, described in § 90.709(e)(7), after successful completion of testing on the failed engine, which contains a description of the remedy and test results for each engine in addition to other information that may be required by this part.

(h) Once a certificate for a failed engine family has been suspended pursuant to paragraph (b) or (c) of this section, the manufacturer must take the following actions before the Administrator will consider reinstating the certificate:

(1) Submit a written report to the Administrator which identifies the reason for the noncompliance of the engines, describes the proposed remedy, including a description of any proposed quality control and/or quality assurance measures to be taken by the manufacturer to prevent future occurrences of the problem, and states the date on which the remedies will be implemented; and

(2) Demonstrate that the engine family for which the certificate of conformity has been suspended does in fact comply with the regulations of this part by testing as many engines as needed so that the CumSum statistic, as calculated in § 90.708(a), falls below the action limit. Such testing must comply with the provisions of this part. If the manufacturer elects to continue testing individual engines after suspension of a certificate, the certificate is reinstated for any engine actually determined to be in conformance with the Family Emission Limits (or standards if no FEL) through testing in accordance with the applicable test procedures, provided that the Administrator has not revoked the certificate pursuant to paragraph (f) of this section.

(i) Once the certificate has been revoked for an engine family, if the manufacturer desires to continue introduction into commerce of a modified version of that family, the following actions must be taken before the Administrator may issue a certificate for that modified family:

(1) If the Administrator determines that the proposed change(s) in engine design may have an effect on emission performance deterioration, the Administrator shall notify the manufacturer within five working days after receipt of the report in paragraph (h)(1) of this section whether subsequent testing under this subpart will be sufficient to evaluate the proposed change or changes or whether additional testing will be required;

(2) After implementing the change or changes intended to remedy the nonconformity, the manufacturer must demonstrate that the modified engine family does in fact conform with the regulations of this part by testing as many engines as needed from the modified engine family so that the CumSum statistic, as calculated in § 90.708(a) using the newly assigned FEL if applicable, falls below the action limit; and

(3) When the requirements of paragraphs (i)(1) and (i)(2) of this section are met, the Administrator shall reissue the certificate or issue a new certificate, as the case may be, to include that family. As long as the CumSum statistic remains above the action limit, the revocation remains in effect.

(j) At any time subsequent to a suspension of a certificate of conformity for a test engine pursuant to paragraph (a) of this section, but not later than 15 days (or such other period as may be allowed by the Administrator) after notification of the Administrator's decision to suspend or revoke a certificate of conformity in whole or in part pursuant to paragraph (b), (c), or (f) of this section, a manufacturer may request a hearing as to whether the tests have

been properly conducted or any sampling methods have been properly applied.

(k) Any suspension of a certificate of conformity under paragraph (d) of this section shall:

(1) Be made only after the manufacturer concerned has been offered an opportunity for a hearing conducted in accordance with §§ 90.712 and 90.713; and

(2) Not apply to engines no longer in the possession of the manufacturer.

(l) After the Administrator suspends or revokes a certificate of conformity pursuant to this section and prior to the commencement of a hearing under § 90.712, if the manufacturer demonstrates to the Administrator's satisfaction that the decision to suspend or revoke the certificate was based on erroneous information, the Administrator shall reinstate the certificate.

(m) To permit a manufacturer to avoid storing non-test engines while conducting subsequent testing of the noncomplying family, a manufacturer may request that the Administrator conditionally reinstate the certificate for that family. The Administrator may reinstate the certificate subject to the following condition: the manufacturer must commit to performing offsetting measures that remedy the nonconformity at no expense to the owners, and which are approved in advance by the Administrator for all engines of that family produced from the time the certificate is conditionally reinstated if the CumSum statistic does not fall below the action limit.

§ 90.712 Request for public hearing.

(a) If the manufacturer disagrees with the Administrator's decision to suspend or revoke a certificate or disputes the basis for an automatic suspension pursuant to § 90.711(a), the manufacturer may request a public hearing.

(b) The manufacturer's request shall be filed with the Administrator not later than 15 days after the Administrator's notification of his or her decision to suspend or revoke, unless otherwise specified by the Administrator. The manufacturer shall simultaneously serve two copies of this request upon the Manager of the Engine Compliance Programs Group and file two copies with the Hearing Clerk for the Agency. Failure of the manufacturer to request a hearing within the time provided constitutes a waiver of the right to a hearing. Subsequent to the expiration of the period for requesting a hearing as of right, the Administrator may, in his or her discretion and for good cause shown, grant the manufacturer a hearing to contest the suspension or revocation.

(c) A manufacturer shall include in the request for a public hearing:

(1) A statement as to which engine configuration(s) within a family is to be the subject of the hearing; and

(2) A concise statement of the issues to be raised by the manufacturer at the hearing, except that in the case of the hearing requested under § 90.711(j), the hearing is restricted to the following issues:

(i) Whether tests have been properly conducted (specifically, whether the tests were conducted in accordance with applicable regulations under this part and whether test equipment was properly calibrated and functioning);

(ii) Whether sampling plans and statistical analyses have been properly applied (specifically, whether sampling procedures and statistical analyses specified in this subpart were followed and whether there exists a basis for distinguishing engines produced at plants other than the one from which engines were selected for testing which would invalidate the Administrator's decision under § 90.711(c));

(3) A statement specifying reasons why the manufacturer believes it will prevail on the merits of each of the issues raised; and

(4) A summary of the evidence which supports the manufacturer's position on each of the issues raised.

(d) A copy of all requests for public hearings will be kept on file in the Office of the Hearing Clerk and will be made available to the public during Agency business hours.

§ 90.713 Administrative procedures for public hearing.

The administrative procedures for a public hearing requested under this subpart shall be those procedures set forth in the regulations found at §§ 90.513 through 90.516. References in

§ 90.513 to § 90.511(j), § 90.512(c)(2), § 90.511(e), § 90.512, § 90.511(d), § 90.503, § 90.512(c) and § 90.512(b) shall be deemed to mean § 90.711(j), § 90.712(c)(2), § 90.711(e), § 90.712, § 90.711(d), § 90.703, and § 90.712(c) and § 90.712(b), respectively. References to ''test orders'' in § 90.513 are not applicable.

Subpart I—Emission-Related Defect Reporting Requirements, Voluntary Emission Recall Program, Ordered Recalls

§ 90.801 Applicability.

(a) The requirements of subpart I are applicable to all nonroad engines and vehicles subject to the provisions of subpart A of part 90. The requirement to report emission-related defects affecting a given class or category of engines will remain applicable for five years from the end of the calendar year in which such engines were manufactured.

(b) Phase 2 engines subject to provisions of subpart B of this part are subject to recall regulations specified in 40 CFR part 85, subpart S, except as otherwise provided in this section.

(c) Reference to section 214 of the Clean Air Act in 40 CFR 85.1801(a) is deemed to mean section 216 of the Clean Air Act.

(d) Reference to section 202 of the Act in 40 CFR 85.1802(a) is deemed to mean section 213 of the Act.

(e) Reference to ''family particulate emission limits'' as defined in part 86 promulgated under section 202 of the Act'' in 40 CFR 85.1803(a) and 85.1805(a)(1) is deemed to mean ''family emission limits'' as defined in subpart C of this part 90 promulgated under section 213 of the Act''.

(f) Reference to ''vehicles or engines'' throughout 40 CFR part 85, subpart S is deemed to mean ''Phase 2 nonroad small SI engines at or below 19 kW.''

(g) In addition to the requirements in 40 CFR 85.1805(a)(9) for Phase 2 engines include a telephone number provided by the manufacturer, which may be used to report difficulty in obtaining recall repairs.

[60 FR 34598, July 3, 1995, as amended at 64 FR 15251, Mar. 30, 1999]

§ 90.802 Definitions.

The definitions in subpart A of this part apply to this subpart. All terms not defined herein or in subpart A have the meaning given them in the Act. The definitions of 40 CFR 85.1801 also apply to this part.

Emission-related defect means a defect in design, materials, or workmanship in a device, system, or assembly described in the approved application for certification which affects any applicable parameter or specification enumerated in 40 CFR part 85, Appendix VIII.

Voluntary emission recall means a repair, adjustment, or modification program voluntarily initiated and conducted by a manufacturer to remedy any emission-related defect for which notification of engine owners has been provided.

[60 FR 34598, July 3, 1995, as amended at 64 FR 15251, Mar. 30, 1999]

§ 90.803 Emission defect information report.

(a) A manufacturer must file a defect information report whenever, on the basis of data obtained subsequent to the effective date of these regulations:

(1) The manufacturer determines, in accordance with procedures established by the manufacturer to identify either safety-related or performance defects, that a specific emission-related defect exists; and

(2) A specific emission-related defect exists in 25 or more engines of a given engine family manufactured in the same certificate or model year.

(b) No report must be filed under this section for any emission-related defect corrected prior to the sale of the affected engines to ultimate purchasers.

(c) The manufacturer must submit defect information reports to EPA's Engine Compliance Programs Group not more than 15 working days after an emission-related defect is found to affect 25 or more engines manufactured in the same certificate or model year. Information required by paragraph (d) of this section that is either not available within 15 working days or is significantly revised must be submitted to EPA's Engine Compliance Programs Group as it becomes available.

(d) Each defect report must contain the following information in substantially the format outlined below:

(1) The manufacturer's corporate name.

(2) A description of the defect.

(3) A description of each class or category of engines potentially affected by the defect including make, model, model year, calendar year produced, and any other information required to identify the engines affected.

(4) For each class or category of engine described in response to paragraph (d)(3) of this section, the following must also be provided:

(i) The number of engines known or estimated to have the defect and an explanation of the means by which this number was determined.

(ii) The address of the plant(s) at which the potentially defective engines were produced.

(5) An evaluation of the emissions impact of the defect and a description of any operational problems which a defective engine might exhibit.

(6) Available emission data which relate to the defect.

(7) An indication of any anticipated manufacturer follow-up.

[60 FR 34598, July 3, 1995, as amended at 64 FR 15251, Mar. 30, 1999]

§ 90.804 Voluntary emissions recall.

(a) When any manufacturer initiates a voluntary emissions recall campaign involving 25 or more engines, the manufacturer must submit a report describing the manufacturer's voluntary emissions recall plan as prescribed by this section within 15 working days of the date owner notification was begun. The report must contain the following:

(1) A description of each class or category of engines recalled including the number of engines to be recalled, the model year, the make, the model, and such other information as may be required to identify the engines recalled;

(2) A description of the specific modifications, alterations, repairs, corrections, adjustments, or other changes to be made to correct the engines affected by the emission-related defect;

(3) A description of the method by which the manufacturer will notify engine owners and, if applicable, the method by which the manufacturer will determine the names and addresses of engine owners;

(4) A description of the proper maintenance or use, if any, upon which the manufacturer conditions eligibility for repair under the recall plan, an explanation of the manufacturer's reasons for imposing any such conditions, and a description of the proof to be required of an engine owner to demonstrate compliance with any such conditions;

(5) A description of the procedure to be followed by engine owners to obtain correction of the nonconformity. This may include designation of the date on or after which the owner can have the nonconformity remedied, the time reasonably necessary to perform the labor to remedy the defect, and the designation of facilities at which the defect can be remedied;

(6) A description of the class of persons other than dealers and authorized warranty agents of the manufacturer who will remedy the defect;

(7) When applicable, three copies of any letters of notification to be sent engine owners;

(8) A description of the system by which the manufacturer will assure that an adequate supply of parts is available to perform the repair under the plan, and that the supply remains both adequate and responsive to owner demand;

(9) Three copies of all necessary instructions to be sent to those persons who are to perform the repair under the recall plan;

(10) A description of the impact of the proposed changes on fuel consumption, performance, and safety of each class or category of engines to be recalled;

(11) A sample of any label to be applied to engines which participated in the voluntary recall campaign.

(b) The manufacturer must submit at least one report on the progress of the recall campaign. Such report must be submitted no later than 18 months from the date notification was begun and include the following information:

(1) The methods used to notify both engine owners, dealers and other individuals involved in the recall campaign;

(2) The number of engines known or estimated to be affected by the emission-related defect and an explanation of the means by which this number was determined;

(3) The number of engines actually receiving repair under the plan; and

(4) The number of engines determined to be ineligible for remedial action due to a failure to properly maintain or use such engines.

§ 90.805 Reports, voluntary recall plan filing, record retention.

(a) Send the defect report, voluntary recall plan, and the voluntary recall progress report to: Group Manager, Engine Compliance Programs Group, (6403–J), Environmental Protection Agency, Washington, DC 20460.

(b) Retain the information gathered by the manufacturer to compile the reports for not less than five years from the date of the manufacture of the engines. The manufacturer must make this information available to duly authorized officials of the EPA upon request.

[60 FR 34598, July 3, 1995, as amended at 64 FR 15251, Mar. 30, 1999]

§ 90.806 Responsibility under other legal provisions preserved.

The filing of any report under the provisions of this subpart does not affect a manufacturer's responsibility to file reports or applications, obtain approval, or give notice under any provision of law.

§ 90.807 Disclaimer of production warranty applicability.

(a) The act of filing an Emission Defect Information Report is inconclusive as to the existence of a defect subject to the warranty provided by subpart L of this part.

(b) A manufacturer may include on each page of its Emission Defect Information Report a disclaimer stating that the filing of a Defect Information Report pursuant to these regulations is not conclusive as to the applicability of the warranty provided by subpart L of this part.

§ 90.808 Ordered recall provisions.

(a) Effective with respect to Phase 2 small SI engines:

(1) If the Administrator determines that a substantial number of any class or category of engines, although properly maintained and used, do not conform to the regulations prescribed under section 213 of the Act when in actual use throughout their useful life (as defined under § 90.105), the Administrator shall immediately notify the manufacturer of such nonconformity and require the manufacturer to submit a plan for remedying the nonconformity of the engines with respect to which such notification is given.

(i) The manufacturer's plan shall provide that the nonconformity of any such engines which are properly used and maintained will be remedied at the expense of the manufacturer.

(ii) If the manufacturer disagrees with such determination of nonconformity and so advises the Administrator, the Administrator shall afford the manufacturer and other interested persons an opportunity to present their views and evidence in support thereof at a public hearing. Unless, as a result of such hearing, the Administrator withdraws such determination of nonconformity, the Administrator shall, within 60 days after the completion of such hearing, order the manufacturer to provide prompt notification of such nonconformity in accordance with paragraph (a)(2) of this section. The manufacturer shall comply in all respects with the requirements of this subpart.

(2) Any notification required to be given by the manufacturer under paragraph (a)(1) of this section with respect to any class or category of engines shall be given to dealers, ultimate purchasers, and subsequent purchasers (if known) in such manner and containing such information as required in subparts I and M of this part.

(3)(i) Prior to an EPA ordered recall, the manufacturer may perform a voluntary emissions recall pursuant to regulations at § 90.804. Such manufacturer is subject to the reporting and recordkeeping requirements of § 90.805.

(ii) Once EPA determines that a substantial number of engines fail to conform with the requirements of section 213 of the Act or this part, the manufacturer will not have the option of a voluntary recall.

(b) The manufacturer bears all cost obligation a dealer incurs as a result of a requirement imposed by paragraph (a) of this section. The transfer of any such cost obligation from a manufacturer to a dealer through franchise or other agreement is prohibited.

(c) Any inspection of an engine for purposes of paragraph (a)(1) of this section, after its sale to the ultimate purchaser, is to be made only if the owner of such vehicle or engine voluntarily permits such inspection to be made, except as may be provided by any state or local inspection program.

[64 FR 15251, Mar. 30, 1999]

Subpart J—Exclusion and Exemption of Nonroad Engines from Regulations

§ 90.901 Applicability.

The requirements of subpart J are applicable to all nonroad engines and vehicles subject to the provisions of subpart A of part 90.

§ 90.902 Definitions.

The definitions in subpart A of this part apply to this subpart. The following definitions also apply to this subpart:

Exemption means exemption from the prohibitions of § 90.1003.

Export exemption means an exemption granted under § 90.1004(b) for the purpose of exporting new nonroad engines.

National security exemption means an exemption granted under § 90.1004(b) for the purpose of national security.

Manufacturer-owned nonroad engine means an uncertified nonroad engine owned and controlled by a nonroad engine manufacturer and used in a manner not involving lease or sale by itself or in a vehicle employed from year to year in the ordinary course of business for product development, production method assessment, and market promotion purposes.

Testing exemption means an exemption granted under § 90.1004(b) for the purpose of research, investigations, studies, demonstrations or training, but not including national security.

§ 90.903 Exclusions, application of section 216 (10) and (11) of the Act.

(a) For the purpose of determining the applicability of section 216(10) of the Act, an internal combustion engine (including the fuel system) that is not used in a motor vehicle is deemed a nonroad engine, if it meets the definition in subpart A of this part. For the purpose of determining the applicability of section 216(11) of the Act, a vehicle powered by a nonroad engine is deemed a nonroad vehicle, if it meets the definition in subpart A of this part.

(b) EPA will maintain a list of models of nonroad engines and models of nonroad vehicles that have been determined to be excluded because they are used solely for competition. This list will be available to the public and may be obtained by writing to the following address: Group Manager, Engine Compliance Programs Group, Engine Programs and Compliance Division (6403J) Environmental Protection Agency, 1200 Pennsylvania Ave., NW., Washington, DC 20460.

(c) Upon written request with supporting documentation, EPA will make written determinations as to whether certain engines are or are not nonroad engines. Engines that are determined not to be nonroad engines are excluded from regulations under this part.

[61 FR 52102, Oct. 4, 1996]

§ 90.904 Who may request an exemption.

(a) Any person may request a testing exemption under § 90.905.

(b) Any nonroad engine manufacturer may request a national security exemption under § 90.908.

(c) For nonroad engine manufacturers, nonroad engines manufactured for export purposes are exempt without application, subject to the provisions of § 90.909.

(d) For eligible manufacturers, as determined by § 90.906, manufacturer-owned nonroad engines are exempt without application, subject to the provisions of § 90.906.

(e) For any person, display nonroad engines are exempt without application, subject to the provisions of § 90.907.

§ 90.905 Testing exemption.

(a) Any person requesting a testing exemption must demonstrate the following:

(1) That the proposed test program has a purpose which constitutes an appropriate basis for an exemption in accordance with § 90.1004(b), and in accordance with subsection (b) of this section;

(2) That the proposed test program necessitates the granting of an exemption, in accordance with subsection (c) of this section;

(3) That the proposed test program exhibits reasonableness in scope, in accordance with subsection (d) of this section; and

(4) That the proposed test program exhibits a degree of control consonant with the purpose of the program and EPA's monitoring requirements, in accordance with subsection (e) of this section.

(b) With respect to the purpose of the proposed test program, an appropriate purpose would be research, investigations, studies, demonstrations, or training, but not national security. A concise statement of purpose is a required item of information.

(c) With respect to the necessity that an exemption be granted, necessity arises from an inability to achieve the stated purpose in a practicable manner without performing or causing to be performed one or more of the prohibited acts under § 90.1003. In appropriate circumstances, time constraints may be a sufficient basis for necessity, but the cost of certification alone, in the absence of extraordinary circumstances, is not a basis for necessity.

(d) With respect to reasonableness, a test program must exhibit a duration of reasonable length and affect a reasonable number of engines. In this regard, required items of information include:

(1) An estimate of the program's duration; and

(2) The maximum number of nonroad engines involved.

(e) With respect to control, the test program must incorporate procedures consistent with the purpose of the test and be capable of affording EPA monitoring capability. As a minimum, required items of information include:

(1) The technical nature of the test;

(2) The site of the test;

(3) The duration and accumulated engine operation associated with the test;

(4) The ownership arrangement with regard to the engines involved in the test;

(5) The intended final disposition of the engines;

(6) The manner in which the engines used in the test will be identified, and that identification recorded, and made available; and

(7) The means or procedure whereby test results will be recorded.

(f) A manufacturer of new nonroad engines may request a testing exemption to cover nonroad engines intended for use in test programs planned or anticipated over the course of a subsequent one-year period. Unless otherwise required by the Director, Engine Programs and Compliance Division, a manufacturer requesting such an exemption need only furnish the information required by paragraphs (a)(1) and (d)(2) of this section along with a description of the recordkeeping and control procedures that will be employed to assure that the engines are used for purposes consistent with § 90.1004(b).

[60 FR 34598, July 3, 1995, as amended at 64 FR 15252, Mar. 30, 1999]

§ 90.906 Manufacturer-owned exemption and precertification exemption.

(a) Any manufacturer owned nonroad engine, as defined by § 90.902, is exempt from § 90.1003, without application, if the manufacturer complies with the following terms and conditions:

(1) The manufacturer must establish, maintain, and retain the following adequately organized and indexed information on each exempted engine:

(i) Engine identification number;

(ii) Use of the engine on exempt status; and

(iii) Final disposition of any engine removed from exempt status.

(2) The manufacturer must provide right of entry and access to these records to EPA authorized representatives as required by § 90.506.

(3) Unless the requirement is waived or an alternative procedure is approved

by the Director, Engine Programs and Compliance Division, the manufacturer must permanently affix a label to each nonroad engine on exempt status. This label should:

(i) Be affixed in a readily visible portion of the engine;

(ii) Be attached in such a manner that it cannot be removed without destruction or defacement;

(iii) State in the English language and in block letters and numerals of a color that contrasts with the background of the label, the following information:

(A) The label heading ''Emission Control Information;''

(B) Full corporate name and trademark of manufacturer;

(C) Engine displacement, engine family identification, and model year of engine; or person or office to be contacted for further information about the engine;

(D) The statement ''This nonroad engine is exempt from the prohibitions of 40 CFR 90.1003.''

(4) No provision of paragraph (a)(3) of this section prevents a manufacturer from including any other information it desires on the label.

[60 FR 34598, July 3, 1995, as amended at 64 FR 15252, Mar. 30, 1999]

§ 90.907 Display exemption.

Where an uncertified nonroad engine is a display engine to be used solely for display purposes, will only be operated incident and necessary to the display purpose, and will not be sold unless an applicable certificate of conformity has been received or the engine has been finally admitted pursuant to subpart G of this part, no request for exemption of the engine is necessary.

§ 90.908 National security exemption.

(a)(1) Any nonroad engine, otherwise subject to this part, which is used in a vehicle or equipment that exhibits substantial features ordinarily associated with military combat such as armor and/or permanently affixed weaponry and which will be owned and/or used by an agency of the federal government with responsibility for national defense, will be considered exempt from this part for purposes of national security. No request for exemption is necessary.

(2) Manufacturers may request a national security exemption for any nonroad engine, otherwise subject to this part, which does not meet the conditions described in paragraph (a)(1) of this section. A manufacturer requesting a national security exemption must state the purpose for which the exemption is required and the request must be endorsed by an agency of the federal government charged with responsibility for national defense.

(b) EPA will maintain a list of models of nonroad engines (and the vehicles or equipment which use them) that have been granted a national security exemption under paragraph (a)(2) of this section. This list will be available to the public and may be obtained by writing to the following address: Group Manager, Engine Compliance Programs Group, Engine Programs and Compliance Division (6403J) Environmental Protection Agency, 1200 Pennsylvania Ave., NW., Washington, DC 20460.

[61 FR 52102, Oct. 4, 1996]

§ 90.909 Export exemptions.

(a) A new nonroad engine intended solely for export, and so labeled or tagged on the outside of the container and on the engine itself, is subject to the provisions of § 90.1003, unless the importing country has new nonroad engine emission standards which differ from EPA standards.

(b) For the purpose of paragraph (a) of this section, a country having no standards, whatsoever, is deemed to be a country having emission standards which differ from EPA standards.

(c) EPA will maintain a list of foreign countries that have in force nonroad emission standards identical to U.S. EPA standards and have so notified EPA. This list may be obtained by writing to the following address: Group Manager, Engine Compliance Programs Group, Engine Programs and Compliance Division (6403–J), Environmental Protection Agency, Washington, DC 20460. New nonroad engines exported to such countries must comply with U.S. EPA certification regulations.

(d) It is a condition of any exemption for the purpose of export under

§90.1004(b) that such exemption be void ab initio with respect to a new nonroad engine intended solely for export if such nonroad engine is sold, or offered for sale, to an ultimate purchaser in the United States for purposes other than export.

[60 FR 34598, July 3, 1995, as amended at 64 FR 15252, Mar. 30, 1999]

§90.910 Granting of exemptions.

(a) If upon completion of the review of an exemption request made pursuant to §90.905 or §90.908, EPA determines it is appropriate to grant such an exemption, a memorandum of exemption is to be prepared and submitted to the person requesting the exemption. The memorandum is to set forth the basis for the exemption, its scope, and such terms and conditions as are deemed necessary. Such terms and conditions generally include, but are not limited to, agreements by the applicant to conduct the exempt activity in the manner described to EPA, create and maintain adequate records accessible to EPA at reasonable times, employ labels for the exempt engines setting forth the nature of the exemption, take appropriate measures to assure that the terms of the exemption are met, and advise EPA of the termination of the activity and the ultimate disposition of the engines.

(b) Any exemption granted pursuant to paragraph (a) of this section is deemed to cover any subject engine only to the extent that the specified terms and conditions are complied with. A breach of any term or condition causes the exemption to be void ab initio with respect to any engine. Consequently, the causing or the performing of an act prohibited under §90.1003(a) (1) or (3), other than in strict conformity with all terms and conditions of this exemption, renders the person to whom the exemption is granted, and any other person to whom the provisions of §90.1003 are applicable, liable to suit under sections 204 and 205 of the Act.

§90.911 Submission of exemption requests.

Requests for exemption or further information concerning exemptions and/or the exemption request review procedure should be addressed to: Group Manager, Engine Compliance Programs Group, Engine Programs and Compliance Division (6403J), Environmental Protection Agency, Washington, DC 20460.

[64 FR 15252, Mar. 30, 1999]

§90.912 Treatment of confidential information.

The provisions for treatment of confidential information described in §90.4 apply to this subpart.

Subpart K—Prohibited Acts and General Enforcement Provisions

§90.1001 Applicability.

The requirements of subpart K are applicable to all nonroad engines and vehicles subject to the provisions of subpart A of part 90.

§90.1002 Definitions.

The definitions in subpart A of this part apply to this subpart. All terms not defined herein or in subpart A have the meaning given them in the Act.

§90.1003 Prohibited acts.

(a) The following acts and the causing thereof are prohibited:

(1)(i) In the case of a manufacturer of new nonroad engines or vehicles for distribution in commerce, the sale, the offering for sale, or the introduction, or delivery for introduction, into commerce, of any new nonroad engine manufactured after the applicable effective date under this part unless such engine is covered by a certificate of conformity issued (and in effect) under regulations found in this part.

(ii) In the case of any person, except as provided by regulation of the Administrator, the importation into the United States of any new nonroad engine manufactured after the applicable effective date under this part unless such engine is covered by a certificate of conformity issued (and in effect) under regulations found in this part.

(2) (i) For a person to fail or refuse to permit access to or copying of records or to fail to make reports or provide information required under §90.1004.

(ii) For a person to fail or refuse to permit entry, testing or inspection authorized under §§ 90.126, 90.506, 90.705, 90.1004, or 90.1207.

(iii) For a person to fail or refuse to perform tests or to have tests performed as required under §§ 90.119, 90.504, 90.703, 90.1004, 90.1204.

(iv) For a person to fail to establish or maintain records as required under §§ 90.209, 90.704, 90.805, or 90.1004.

(v) For a person to fail to submit a remedial plan as required under § 90.808.

(3)(i) For a person to remove or render inoperative a device or element of design installed on or in a nonroad engine in compliance with regulations under this part prior to its sale and delivery to the ultimate purchaser, or for a person knowingly to remove or render inoperative such a device or element of design after the sale and delivery to the ultimate purchaser; or

(ii) For a person to manufacture, sell or offer to sell, or install, a part or component intended for use with, or as part of, a nonroad engine, where a principal effect of the part or component is to bypass, defeat, or render inoperative a device or element of design installed on or in a nonroad engine in compliance with regulations issued under this part, and where the person knows or should know that the part or component is being offered for sale or installed for this use or put to such use.

(4) For a manufacturer of a new nonroad engine subject to standards prescribed under this part:

(i) To sell, offer for sale, or introduce or deliver into commerce, a nonroad engine unless the manufacturer has complied with the requirements of § 90.1103.

(ii) To sell, offer for sale, or introduce or deliver into commerce, a nonroad engine unless a label or tag is affixed to the engine in accordance with regulations under this part.

(iii) To fail or refuse to comply with the requirements of § 90.808.

(iv) To provide directly or indirectly in any communication to the ultimate purchaser or a subsequent purchaser that the coverage of a warranty under the Act is conditioned upon use of a part, component, or system manufactured by the manufacturer or a person acting for the manufacturer or under its control, or conditioned upon service performed by such persons, except as provided in subpart L of this part.

(v) To fail or refuse to comply with the terms and conditions of the warranty under subpart L of this part.

(5) For a manufacturer of new nonroad vehicles to distribute in commerce, sell, offer for sale, or introduce into commerce, nonroad vehicles which contain an engine not covered by a certificate of conformity (except as specified in paragraph (b)(4) of this section) or which contain a handheld engine in a nonhandheld vehicle.

(6) For a person to circumvent or attempt to circumvent the residence time requirements of Paragraph (a)(2)(iii) of this Section of the nonroad engine definition in § 90.3.

(b) For the purposes of enforcement of this part, the following apply:

(1) Nothing in paragraph (a) of this section is to be construed to require the use of manufacturer parts in maintaining or repairing a nonroad engine.

(2) Actions for the purpose of repair or replacement of a device or element of design or any other item are not considered prohibited acts under § 90.1003(a) if the actions are a necessary and temporary procedure, the device or element is replaced upon completion of the procedure, and the action results in the proper functioning of the device or element of design.

(3) Actions for the purpose of a conversion of a nonroad engine for use of a clean alternative fuel (as defined in Title II of the Act) are not considered prohibited acts under § 90.1003(a) if:

(i) The vehicle complies with the applicable standard when operating on the alternative fuel, and the device or element is replaced upon completion of the conversion procedure, and

(ii) In the case of engines converted to dual fuel or flexible use, the action results in proper functioning of the device or element when the nonroad engine operates on conventional fuel.

(4) Certified nonroad engines shall be used in all equipment or vehicles that are self-propelled, portable, transportable, or are intended to be propelled while performing their function, unless the manufacturer of the equipment or vehicle can prove that the vehicle or equipment will be used in a manner

consistent with paragraph (2) of the definition of *Nonroad engine* in §90.3. Nonroad vehicle and equipment manufacturers may continue to use noncertified nonroad engines built prior to the applicable implementation date of the Phase 1 rule until noncertified engine inventories are depleted; further after the applicable implementation of the Phase 2 regulations in this part, nonroad vehicle and equipment manufacturers may continue to use Phase 1 engines until Phase 1 engine inventories are depleted. Stockpiling (i.e., build up of an inventory of uncertified engines or Phase 1 engines beyond normal business practices to avoid or delay compliance with the Phase 1 or Phase 2 regulations in this part, respectively) will be considered a violation of this section.

(5) A new nonroad engine, intended solely to replace an engine in a piece of nonroad equipment that was originally produced with an engine manufactured prior to the applicable implementation date as described in §§90.2, 90.103 and 90.106, or with an engine that was originally produced in a model year in which less stringent standards under this part were in effect, shall not be subject to the requirements of §90.106 or prohibitions and provisions of paragraphs (a)(1) and (b)(4) of this section provided that:

(i) The engine manufacturer has ascertained that no engine produced by itself or the manufacturer of the engine that is being replaced, if different, and certified to the requirements of this subpart, is available with the appropriate physical or performance characteristics to repower the equipment; and

(ii) The engine manufacturer or its agent takes ownership and possession of the old engine in partial exchange for the replacement engine; and

(iii) The replacement engine is clearly labeled with the following language, or similar alternate language approved in advance by the Administrator:

THIS ENGINE DOES NOT COMPLY WITH FEDERAL NONROAD OR ON-HIGHWAY EMISSION REQUIREMENTS. SALE OR INSTALLATION OF THIS ENGINE FOR ANY PURPOSE OTHER THAN AS A REPLACEMENT ENGINE IN A NONROAD VEHICLE OR PIECE OF NONROAD EQUIPMENT WHOSE ORIGINAL ENGINE WAS NOT CERTIFIED, OR WAS CERTIFIED TO LESS STRINGENT EMISSION STANDARDS THAN THOSE THAT APPLY TO THE YEAR OF MANUFACTURE OF THIS ENGINE, IS A VIOLATION OF FEDERAL LAW SUBJECT TO CIVIL PENALTY;

and

(iv) Where the replacement engine is intended to replace an engine built after the applicable implementation date of regulations under this part, but built to less stringent emission standards than are currently applicable, the replacement engine shall be identical in all material respects to a certified configuration of the same or later model year as the engine being replaced.

(v) In cases where an engine is to be imported for replacement purposes under the provisions of this paragraph (b)(5), the term ''engine manufacturer'' shall not apply to an individual or other entity that does not possess a current Certificate of Conformity issued by EPA under this part.

(6)(i) Regulations elsewhere in this part notwithstanding, for three model years after the phase-in of each set of Class I through Class V Phase 2 standards; i.e. up to and including August 1, 2010 for Class I engines, up to and including model year 2008 for Class II engines, up to and including model year 2008 for Class III and Class IV engines, and up to and including model year 2010 for Class V engines, small volume equipment manufacturers as defined in this part, may continue to use, and engine manufacturers may continue to supply, engines certified to Phase 1 standards (or identified and labeled by their manufacturer to be identical to engines previously certified under Phase 1 standards), provided the equipment manufacturer has demonstrated to the satisfaction of the Administrator that no certified Phase 2 engine is available with suitable physical or performance characteristics to power a piece of equipment in production prior to the initial effective date of Phase 2 standards, as indicated in §90.103(a). The equipment manufacturer must also certify to the Administrator that the equipment model has not undergone any redesign which could have facilitated conversion of the equipment to accommodate a Phase 2 engine. These

provisions do not apply to Class I–A and Class I–B engines.

(ii) Regulations elsewhere in this part notwithstanding, for the duration of the Phase 2 rule in this part, equipment manufacturers that produce small volume equipment models, as defined in this part, for a Class I model in production prior to August 1, 2007, or a Class II model in production prior to the 2001 model year, or a Class III or Class IV model in production prior to the 2002 model year, or a Class V model in production prior to the 2004 model year, may continue to use in that small volume equipment model, and engine manufacturers may continue to supply, engines certified to Phase 1 requirements (or identified and labeled by their manufacturer to be identical to engines previously certified under Phase 1 standards). To be eligible for this provision, the equipment manufacturer must have demonstrated to the satisfaction of the Administrator that no certified Phase 2 engine is available with suitable physical or performance characteristics to power the small volume equipment model. The equipment manufacturer must also certify to the Administrator that the equipment model has not undergone any redesign which could have facilitated conversion of the equipment to accommodate a Phase 2 engine. These provisions do not apply to Class I–A and Class I–B engines.

(iii) An equipment manufacturer which is unable to obtain suitable Phase 2 engines and which can not obtain relief under any other provision of this part, may, prior to the date on which the manufacturer would become in noncompliance with the requirement to use Phase 2 engines, apply to the Administrator to be allowed to continue using Phase 1 engines, through August 1, 2008 for Class I engines, through the 2006 model year for Class II engines, through the 2006 model year for Class III and Class IV engines, and through the 2008 model year for Class V engines, subject to the following criteria (These provisions do not apply to Class I–A and Class I–B engines.):

(A) The inability to obtain Phase 2 engines is despite the manufacturer's best efforts and is the result of an extraordinary action on the part of the engine manufacturer that was outside the control of and could not be reasonably foreseen by the equipment manufacturer; such as canceled production or shipment, last minute certification failure, unforeseen engine cancellation, plant closing, work stoppage or other such circumstance; and

(B) the inability to market the particular equipment will bring substantial economic hardship to the equipment manufacturer resulting in a major impact on the equipment manufacturer's solvency.

(iv) The written permission from the Administrator to the equipment manufacturer shall serve as permission for the engine manufacturer to provide such Phase 1 engines required by the equipment manufacturers under this paragraph (b)(6) of this section. As Phase 1 engines, these engines are exempt from Production Line Testing requirements under subpart H of this part and in-use testing provisions under subpart M of this part, and are excluded from the certification averaging, banking and trading program of subpart C of this part.

(7) Actions for the purpose of installing or removing altitude kits and performing other changes to compensate for altitude change as described in the application for certification pursuant to § 90.107(d) and approved at the time of certification pursuant to § 90.108(a) are not considered prohibited acts under paragraph (a) of this section.

[60 FR 34598, July 3, 1995, as amended at 62 FR 42644, Aug. 7, 1997; 64 FR 15252, Mar. 30, 1999; 65 FR 24313, Apr. 25, 2000]

§ 90.1004 General enforcement provisions.

(a) *Information collection provisions.* (1) Every manufacturer of new nonroad engines and other persons subject to the requirements of this part must establish and maintain records, perform tests where such testing is not otherwise reasonably available under this part, make reports and provide information the Administrator may reasonably require to determine whether the manufacturer or other person has acted or is acting in compliance with this part or to otherwise carry out the provisions of this part, and must, upon request of an officer or employee duly

designated by the Administrator, permit the officer or employee at reasonable times to have access to and copy such records. The manufacturer shall comply in all respects with the requirements of subpart I of this part.

(2) For purposes of enforcement of this part, an officer or employee duly designated by the Administrator, upon presenting appropriate credentials, is authorized:

(i) To enter, at reasonable times, any establishment of the manufacturer, or of any person whom the manufacturer engaged to perform any activity required under paragraph (a)(1) of this section, for the purposes of inspecting or observing any activity conducted pursuant to paragraph (a)(1) of this section; and

(ii) To inspect records, files, papers, processes, controls, and facilities used in performing an activity required by paragraph (a)(1) of this section, by the manufacturer or by a person whom the manufacturer engaged to perform the activity.

(b) *Exemption provision*. The Administrator may exempt a new nonroad engine from §90.1003 upon such terms and conditions as the Administrator may find necessary for the purpose of export, research, investigations, studies, demonstrations, or training, or for reasons of national security.

(c) *Importation provision*. (1) A new nonroad engine or vehicle offered for importation or imported by a person in violation of §90.1003 is to be refused admission into the United States, but the Secretary of the Treasury and the Administrator may, by joint regulation, provide for deferring a final determination as to admission and authorizing the delivery of such a nonroad engine offered for import to the owner or consignee thereof upon such terms and conditions (including the furnishing of a bond) as may appear to them appropriate to insure that the nonroad engine will be brought into conformity with the standards, requirements, and limitations applicable to it under this part.

(2) If a nonroad engine is finally refused admission under this paragraph, the Secretary of the Treasury shall cause disposition thereof in accordance with the customs laws unless it is exported, under regulations prescribed by the Secretary, within 90 days of the date of notice of the refusal or additional time as may be permitted pursuant to the regulations.

(3) Disposition in accordance with the customs laws may not be made in such manner as may result, directly or indirectly, in the sale, to the ultimate purchaser, of a new nonroad engine that fails to comply with applicable standards of the Administrator under this part.

(d) *Export provision*. A new nonroad engine intended solely for export, and so labeled or tagged on the outside of the container and on the engine itself, shall be subject to the provisions of §90.1003, except that if the country that is to receive the engine has emission standards that differ from the standards prescribed under subpart B of this part, then the engine must comply with the standards of the country that is to receive the engine.

§90.1005 Injunction proceedings for prohibited acts.

(a) The district courts of the United States have jurisdiction to restrain violations of §90.1003.

(b) Actions to restrain such violations must be brought by and in the name of the United States. In an action, subpoenas for witnesses who are required to attend a district court in any district may run into any other district.

§90.1006 Penalties.

(a) *Violations*. A violation of the requirements of this subpart is a violation of the applicable provisions of the Act and is subject to the penalty provisions thereunder.

(1) A person who violates §90.1003(a)(1), (a)(4), or (a)(5), or a manufacturer or dealer who violates §90.1003(a)(3)(i), is subject to a civil penalty of not more than $25,000 for each violation.

(2) A person other than a manufacturer or dealer who violates §90.1003(a)(3)(i) or any person who violates §90.1003(a)(3)(ii) is subject to a civil penalty of not more than $2,500 for each violation.

(3) A violation with respect to §90.1003(a)(1), (a)(3)(i), (a)(4), or (a)(5)

constitutes a separate offense with respect to each nonroad engine.

(4) A violation with respect to § 90.1003(a)(3)(ii) constitutes a separate offense with respect to each part or component. Each day of a violation with respect to § 90.1003(a)(6) constitutes a separate offense.

(5) A person who violates § 90.1003(a)(2) or (a)(6) is subject to a civil penalty of not more than $25,000 per day of violation.

(b) *Civil actions.* The Administrator may commence a civil action to assess and recover any civil penalty under paragraph (a) of this section.

(1) An action under this paragraph may be brought in the district court of the United States for the district in which the violation is alleged to have occurred, the defendant resides, or the Administrator's principal place of business is located, and in which the court has jurisdiction to assess a civil penalty.

(2) In determining the amount of a civil penalty to be assessed under this paragraph, the court is to take into account the gravity of the violation, the economic benefit or savings (if any) resulting from the violation, the size of the violator's business, the violator's history of compliance with Title II of the Act, action taken to remedy the violation, the effect of the penalty on the violator's ability to continue in business, and such other matters as justice may require.

(3) In any such action, subpoenas for witnesses who are required to attend a district court in any district may run into any other district.

(c) *Administrative assessment of certain penalties.* (1) *Administrative penalty authority.* In lieu of commencing a civil action under paragraph (b) of this section, the Administrator shall assess any civil penalty prescribed in paragraph (a) of this section, except that the maximum amount of penalty sought against each violator in a penalty assessment proceeding can not exceed $200,000, unless the Administrator and the Attorney General jointly determine that a matter involving a larger penalty amount is appropriate for administrative penalty assessment. Any such determination by the Administrator and the Attorney General is not subject to judicial review. Assessment of a civil penalty is made by an order made on the record after opportunity for a hearing held in accordance with the procedures found at part 22 of this chapter. The Administrator may compromise, or remit, with or without conditions, any administrative penalty which may be imposed under this section.

(2) *Determining amount.* In determining the amount of any civil penalty assessed under this subsection, the Administrator is to take into account the gravity of the violation, the economic benefit or savings (if any) resulting from the violation, the size of the violator's business, the violator's history of compliance with Title II of the Act, action taken to remedy the violation, the effect of the penalty on the violator's ability to continue in business, and such other matters as justice may require.

(3) *Effect of administrator's action.* (i) Action by the Administrator under this paragraph does not affect or limit the Administrator's authority to enforce any provisions of this part; except that any violation with respect to which the Administrator has commenced and is diligently prosecuting an action under this part, or for which the Administrator has issued a final order not subject to further judicial review and for which the violator has paid a penalty assessment under this part may not be the subject of a civil penalty action under paragraph (b) of this section.

(ii) No action by the Administrator under this part affects a person's obligation to comply with a section of this part.

(4) *Finality of order.* An order issued under this part becomes final 30 days after its issuance unless a petition for judicial review is filed under paragraph (c)(5) of this section.

(5) *Judicial review.* (i) A person against whom a civil penalty is assessed in accordance with this part may seek review of the assessment in the United States District Court for the District of Columbia or for the district in which the violation is alleged to have occurred, in which such person resides, or where the person's principle place of business is located, within the 30-day period beginning on the date a

civil penalty order is issued. The person must simultaneously send a copy of the filing by certified mail to the Administrator and the Attorney General.

(ii) The Administrator must file in the court within 30 days a certified copy, or certified index, as appropriate, of the record on which the order was issued. The court is not to set aside or remand any order issued in accordance with the requirements of this paragraph unless substantial evidence does not exist in the record, taken as a whole, to support the finding of a violation or unless the Administrator's assessment of the penalty constitutes an abuse of discretion, and the court is not to impose additional civil penalties unless the Administrator's assessment of the penalty constitutes an abuse of discretion. In any proceedings, the United States may seek to recover civil penalties assessed under this section.

(6) *Collection.* (i) If any person fails to pay an assessment of a civil penalty imposed by the Administrator as provided in this part after the order making the assessment has become final or after a court in an action brought under paragraph (c)(5) of this section has entered a final judgment in favor of the Administrator, the Administrator is to request that the Attorney General bring a civil action in an appropriate district court to recover the amount assessed (plus interest at rates established pursuant to section 6621(a)(2) of the Internal Revenue Code of 1986 from the date of the final order or the date of final judgment, as the case may be). In such an action, the validity, amount, and appropriateness of the penalty are not subject to review.

(ii) A person who fails to pay on a timely basis the amount of an assessment of a civil penalty as described in paragraph (c)(6)(i) of this section is required to pay, in addition to that amount and interest, the United States' enforcement expenses, including attorney's fees and costs for collection proceedings, and a quarterly nonpayment penalty for each quarter during which the failure to pay persists. The nonpayment penalty is an amount equal to 10 percent of the aggregate amount of that person's penalties and nonpayment penalties which are unpaid as of the beginning of such quarter.

Subpart L—Emission Warranty and Maintenance Instructions

§90.1101 Applicability.

The requirements of subpart L are applicable to all nonroad engines and vehicles subject to the provisions of subpart A of part 90.

§90.1102 Definitions.

The definitions of subpart A of this part apply to this subpart.

§90.1103 Emission warranty, warranty period.

(a) Warranties imposed by this subpart shall be for the first two years of engine use from the date of sale to the ultimate purchaser. Manufacturers of handheld engines subject to Phase 2 standards may apply to the Administrator for approval for a warranty period of less than two years for handheld engines that are subject to severe service in seasonal equipment and are likely to run their full useful life hours in less than two years. Such an application must be made prior to certification. Alternatively, manufacturers of handheld engines subject to Phase 2 standards may apply to the Administrator for approval for a warranty period equal to the useful life of the engine or two years, whichever is less, if the equipment in which the engine is placed is equipped with a meter for measuring hours of use. Such an application must be made prior to certification.

(b) The manufacturer of each new nonroad engine must warrant to the ultimate purchaser and each subsequent purchaser that the engine is designed, built and equipped so as to conform at the time of sale with applicable regulations under section 213 of the Act, and the engine is free from defects in materials and workmanship which cause such engine to fail to conform with applicable regulations for its warranty period.

(c) In the case of a nonroad engine part, the manufacturer or rebuilder of the part may certify according to §85.2112 of this chapter that use of the part will not result in a failure of the

engine to comply with emission standards promulgated in this part.

(d) For the purposes of this section, the owner of any nonroad engine warranted under this part is responsible for the proper maintenance of the engine as stated in the manufacturer's written instructions. Proper maintenance generally includes replacement and service, at the owner's expense at a service establishment or facility of the owner's choosing, such items as spark plugs, points, condensers, and any other part, item, or device related to emission control (but not designed for emission control) under the terms of the last sentence of section 207(a)(3) of the Act, unless such part, item, or device is covered by any warranty not mandated by this Act.

[60 FR 34598, July 3, 1995, as amended at 64 FR 15253, Mar. 30, 1999; 65 FR 24314, Apr. 25, 2000]

§ 90.1104 Furnishing of maintenance instructions to ultimate purchaser.

(a) The manufacturer must furnish or cause to be furnished to the ultimate purchaser of each new nonroad engine written instructions for the maintenance needed to assure proper functioning of the emission control system.

(b) The manufacturer must provide in boldface type on the first page of the written maintenance instructions notice that maintenance, replacement, or repair of the emission control devices and systems may be performed by any nonroad engine repair establishment or individual.

(c) The instructions under paragraph (b) of this section will not include any condition on the ultimate purchaser's using, in connection with such engine, any component or service (other than a component or service provided without charge under the terms of the purchase agreement) which is identified by brand, trade, or corporate name. Such instructions also will not directly or indirectly distinguish between service performed by the franchised dealers of such manufacturer or any other service establishments with which such manufacturer has a commercial relationship and service performed by independent nonroad engine repair facilities with which such manufacturer has no commercial relationship.

(d) The prohibition of paragraph (c) of this section may be waived by the Administrator if:

(1) The manufacturer satisfies the Administrator that the engine will function properly only if the component or service so identified is used in connection with such engine; and

(2) The Administrator finds that such a waiver is in the public interest.

(e) If a manufacturer includes in an advertisement a statement respecting the cost or value of emission control devices or systems, the manufacturer shall set forth in the statement the cost or value attributed to these devices or systems by the Secretary of Labor (through the Bureau of Labor Statistics). The Secretary of Labor, and his or her representatives, has the same access for this purpose to the books, documents, papers, and records of a manufacturer as the Comptroller General has to those of a recipient of assistance for purposes of section 311 of the Act.

[60 FR 34598, July 3, 1995, as amended at 64 FR 15253, Mar. 30, 1999]

Subpart M—Voluntary In-Use Testing

SOURCE: 64 FR 15254, Mar. 30, 1999, unless otherwise noted.

§ 90.1201 Applicability.

The provisions of this subpart from § 90.1201 through § 90.1249 are applicable to all handheld and nonhandheld Phase 2 engines subject to the provisions of subpart A of this part.

[64 FR 15254, Mar. 30, 1999, as amended at 65 FR 24314, Apr. 25, 2000]

§ 90.1202 Definitions.

For the purposes of this subpart, except as otherwise provided, the definitions in subparts A and C of this part apply to this subpart.

§ 90.1203 Voluntary Manufacturer In-Use Testing Program.

(a) Manufacturers may elect to participate in the voluntary in-use testing program by notifying the Administrator in writing of their intent to conduct emissions testing on in-use engines prior to the beginning of each

model year. The notification must include a list of engine families the manufacturer has selected to include in the testing program.

(b) Each engine family included in the voluntary in-use testing program is exempted from the Production Line Testing requirements according to §90.701(c) for two model years, the current model year and the subsequent model year. Manufacturers may only include up to twenty percent of their eligible engine families in this in-use testing program each model year.

(c) The manufacturer must randomly select or procure a minimum of three engines, from each family included in the voluntary program, for emissions testing. These three engines may be selected or procured from:

(1) Existing consumer or independently owned fleets,

(2) Existing manufacturer owned fleets, or

(3) The production line and placed into either manufacturer or consumer owned fleets. Although a minimum of three engines must be emissions tested from each engine family in this testing program, a manufacturer may elect to emissions test more than three engines per family.

(d) The manufacturer or the manufacturer's designee must:

(1) Age the selected engines in equipment representing the top 50 percent, by production, of available equipment for the engine family.

(2) Age the selected engines to at least 75 percent of each engines' useful life as determined pursuant to §90.105.

(3) Age the engine/equipment combination in actual field conditions encountered with typical use of the equipment as described in the owner's manual or other literature sold with the equipment or engine.

(e) Documents obtained in the procurement or aging process must be maintained as required in §90.121.

(f) The manufacturer must complete testing within three calendar years from the time they notified the Administrator of their intent to participate in the voluntary in-use testing program, unless otherwise approved by the Administrator; the Administrator will give such approval upon acceptance of documentation demonstrating that appropriate in-use testing will take a longer period of time.

§90.1204 Maintenance, aging and testing of engines.

(a) Prior to aging the engines and after appropriate stabilization, manufacturers may optionally conduct emissions testing on the engines, according to the test procedures described in subpart E of this part. These tests to serve as baseline references.

(b) Manufacturers must obtain information regarding the accumulated usage, maintenance, operating conditions, and storage of the test engines.

(1) The manufacturer may take reasonable measures to assure that the engines and equipment were properly used and maintained during the field aging process, but additional maintenance to that indicated in the owners manual or other literature sold with the equipment or engine is prohibited.

(2) Unless otherwise approved by the Administrator, once a manufacturer begins aging and/or testing an engine, the manufacturer may not remove that engine from the selected sample unless that engine experiences catastrophic mechanical failure or safety concerns requiring major engine repair.

(c) The manufacturer may perform minimal set-to-spec maintenance on components of a test engine that are not subject to parameter adjustment. Components subject to parameter adjustment must be sealed and tamperproof and may not be adjusted for testing. Unless otherwise approved by the Administrator, maintenance to any test engine may include only that which is listed in the owner's instructions for engines with the amount of service and age of the test engine.

(d) After aging each engine to at least 75 percent of the engine's useful life as determined pursuant to §90.105, at least one valid emission test, according to the test procedure outlined in subpart E of this part, is required for each test engine. Data from other emission testing or performance testing performed on a test engine must be supplied to EPA, and may not be used for the purpose of determining the need for maintenance on an engine.

(e) Documents obtained in the procurement, aging, maintenance, or testing process must be maintained as required in § 90.121.

§ 90.1205 In-use test program reporting requirements.

(a) The manufacturer shall submit to the Administrator within ninety (90) days of completion of testing for a given model year's engines, all emission testing results generated from the voluntary in-use testing program. The following information must be reported for each test engine:

(1) Engine family;

(2) Model;

(3) Application;

(4) Engine serial number;

(5) Date of manufacture;

(6) Hours of use;

(7) Date and time of each test attempt;

(8) Results (if any) of each test attempt;

(9) Schedules, descriptions and justifications of all maintenance and/or adjustments performed;

(10) Schedules, descriptions and justifications of all modifications and/or repairs; and

(11) A listing of any test engines that were deleted from the aging process or testing process and technical justifications to support the deletion.

(b) All testing reports and requests for approvals made under this subpart shall be addressed to: Manager, Engine Compliance Programs Group (6403–J), U.S. Environmental Protection Agency, Washington, DC 20460.

§ 90.1206 [Reserved]

§ 90.1207 Entry and access.

(a) To allow the Administrator to determine whether a manufacturer is complying with the provisions under this subpart, EPA enforcement officers or their authorized representatives, upon presentation of credentials, shall be permitted entry, during operating hours, into any of the following places:

(1) Any facility where engines undergo or are undergoing aging, maintenance, repair, preparation for aging, selection for aging or emission testing.

(2) Any facility where records or documents related to any of activities described in paragraph (a)(1) of this section are kept.

(3) Any facility where any engine that is being tested or aged, was tested or aged or will be tested or aged is present.

(b) Upon admission to any facility referred to in paragraph (a) of this section, EPA enforcement officers or EPA authorized representatives are authorized to perform those activities set forth in § 90.705 (b) and also to inspect and make copies of records related to engine aging (service accumulation) and maintenance.

(c) The provisions of § 90.705(c), (d), (e), (f) and (g) also apply to entry and access under this subpart.

§§ 90.1208—90.1249 [Reserved]

PART 91—CONTROL OF EMISSIONS FROM MARINE SPARK-IGNITION ENGINES

Subpart A—General

Sec.
91.1 Applicability.
91.2 Applicable date.
91.3 Definitions.
91.4 Acronyms and abbreviations.
91.5 Table and figure numbering; position.
91.6 Reference materials.
91.7 Treatment of confidential information.

Subpart B—Emission Standards and Certification Provisions

91.101 Applicability.
91.102 Definitions.
91.103 Averaging, banking, and trading of exhaust emission credits.
91.104 Exhaust emission standards for outboard and personal watercraft engines.
91.105 Useful life period, recall, and warranty periods.
91.106 Certificate of conformity.
91.107 Application for certification.
91.108 Certification.
91.109 Requirement of certification—closed crankcase.
91.110 Requirement of certification—prohibited controls.
91.111 Requirement of certification—prohibition of defeat devices.
91.112 Requirement of certification—adjustable parameters.
91.113 Requirement of certification—emission control information label and engine identification number.
91.114 Requirement of certification—supplying production engines upon request.

91.115 Certification procedure—determining engine power and engine families.
91.116 Certification procedure—test engine selection.
91.117 Certification procedure—service accumulation.
91.118 Certification procedure—testing.
91.119 Certification procedure—use of special test procedures.
91.120 Compliance with Family Emission Limits over useful life.
91.121 Certification procedure—recordkeeping.
91.122 Amending the application and certificate of conformity.
91.123 Denial, revocation of certificate of conformity.
91.124 Request for hearing.
91.125 Hearing procedures.
91.126 Right of entry and access.

Subpart C—Averaging, Banking, and Trading Provisions

91.201 Applicability.
91.202 Definitions.
91.203 General provisions.
91.204 Averaging.
91.205 Banking.
91.206 Trading.
91.207 Credit calculation and manufacturer compliance with emission standards.
91.208 Certification.
91.209 Maintenance of records.
91.210 End-of-year and final reports.
91.211 Notice of opportunity for hearing.

Subpart D—Emission Test Equipment Provisions

91.301 Scope; applicability.
91.302 Definitions.
91.303 Acronyms and abbreviations.
91.304 Test equipment overview.
91.305 Dynamometer specifications and calibration accuracy.
91.306 Dynamometer torque cell calibration.
91.307 Engine cooling system.
91.308 Lubricating oil and test fuel.
91.309 Engine intake air temperature measurement.
91.310 Engine intake air humidity measurement.
91.311 Test conditions.
91.312 Analytical gases.
91.313 Analyzers required.
91.314 Analyzer accuracy and specifications.
91.315 Analyzer initial calibration.
91.316 Hydrocarbon analyzer calibration.
91.317 Carbon monoxide analyzer calibration.
91.318 Oxides of nitrogen analyzer calibration.
91.319 NO_X converter check.
91.320 Carbon dioxide analyzer calibration.
91.321 NDIR analyzer calibration.
91.322 Calibration of other equipment.
91.323 Analyzer bench checks.
91.324 Analyzer leakage check.
91.325 Analyzer interference checks.
91.326 Pre- and post-test analyzer calibration.
91.327 Sampling system requirements.
91.328 Measurement equipment accuracy/calibration frequency table.
91.329 Catalyst thermal stress test.
APPENDIX A TO SUBPART D OF PART 91—FIGURES
APPENDIX B TO SUBPART D OF PART 91—FIGURES

Subpart E—Gaseous Exhaust Test Procedures

91.401 Scope; applicability.
91.402 Definitions.
91.403 Symbols and abbreviations.
91.404 Test procedure overview.
91.405 Recorded information.
91.406 Engine parameters to be measured and recorded.
91.407 Engine inlet and exhaust systems.
91.408 Pre-test procedures.
91.409 Engine dynamometer test run.
91.410 Engine test cycle.
91.411 Post-test analyzer procedures.
91.412 Data logging.
91.413 Exhaust sample procedure—gaseous components.
91.414 Raw gaseous exhaust sampling and analytical system description.
91.415 Raw gaseous sampling procedures.
91.416 Intake air flow measurement specifications.
91.417 Fuel flow measurement specifications.
91.418 Data evaluation for gaseous emissions.
91.419 Raw emission sampling calculations.
91.420 CVS concept of exhaust gas sampling system.
91.421 Dilute gaseous exhaust sampling and analytical system description.
91.423 Exhaust gas analytical system; CVS grab sample.
91.424 Dilute sampling procedure—CVS calibration.
91.425 CVS calibration frequency.
91.426 Dilute emission sampling calculations.
91.427 Catalyst thermal stress resistance evaluation.
APPENDIX A TO SUBPART E OF PART 91—TABLES
APPENDIX B TO SUBPART E OF PART 91—FIGURES

Subpart F—Manufacturer Production Line Testing Program

91.501 Applicability.
91.502 Definitions.
91.503 Production line testing by the manufacturer.

91.504 Maintenance of records; submittal of information.
91.505 Right of entry and access.
91.506 Engine sample selection.
91.507 Test procedures.
91.508 Cumulative Sum (CumSum) procedure.
91.509 Calculation and reporting of test results.
91.510 Compliance with criteria for production line testing.
91.511 Suspension and revocation of certificates of conformity.
91.512 Request for public hearing.
91.513 Administrative procedures for public hearing.
91.514 Hearing procedures.
91.515 Appeal of hearing decision.
91.516 Treatment of confidential information.

Subpart G—Selective Enforcement Auditing Regulations

91.601 Applicability.
91.602 Definitions.
91.603 Applicability of part 91, subpart F.
91.604 Test orders.
91.605 Testing by the Administrator.
91.606 Sample selection.
91.607 Test procedures.
91.608 Compliance with acceptable quality level and passing and failing criteria for selective enforcement audits.

APPENDIX A TO SUBPART G OF PART 91—SAMPLING PLANS FOR SELECTIVE ENFORCEMENT AUDITING OF MARINE ENGINES

Subpart H—Importation of Nonconforming Marine Engines

91.701 Applicability.
91.702 Definitions.
91.703 Admission.
91.704 Exemptions and exclusions.
91.705 Prohibited acts; penalties.
91.706 Treatment of confidential information.

Subpart I—In-Use Testing and Recall Regulations

91.801 Applicability.
91.802 Definitions.
91.803 Manufacturer in-use testing program.
91.804 Maintenance, procurement and testing of in-use engines.
91.805 In-use test program reporting requirements.
91.806 Voluntary emissions recall.

Subpart J—Emission-Related Defect Reporting Requirements, Voluntary Emission Recall Program

91.901 Applicability.
91.902 Definitions.
91.903 Applicability to part 85, subpart T.
91.904 Voluntary emission recall.
91.905 Reports, voluntary recall plan filing, record retention.
91.906 Responsibility under other legal provisions preserved.
91.907 Disclaimer of production warranty applicability.

Subpart K—Exclusion and Exemption of Marine SI Engines

91.1001 Applicability.
91.1002 Definitions.
91.1003 Exclusions based on section 216(10) of the Act.
91.1004 Who may request an exemption.
91.1005 Testing exemption.
91.1006 Manufacturer-owned exemption and precertification exemption.
91.1007 Display exemption.
91.1008 National security exemption.
91.1009 Export exemptions.
91.1010 Granting of exemptions.
91.1011 Submission of exemption requests.
91.1012 Treatment of confidential information.

Subpart L—Prohibited Acts and General Enforcement Provisions

91.1101 Applicability.
91.1102 Definitions.
91.1103 Prohibited acts.
91.1104 General enforcement provisions.
91.1105 Injunction proceedings for prohibited acts.
91.1106 Penalties.
91.1107 Warranty provisions.
91.1108 In-use compliance provisions.

Subpart M—Emission Warranty and Maintenance Instructions

91.1201 Applicability.
91.1202 Definitions.
91.1203 Emission warranty, warranty period.
91.1204 Furnishing of maintenance and use instructions to ultimate purchaser.

Subpart N—In-Use Credit Program for New Marine Engines

91.1301 Applicability.
91.1302 Definitions.
91.1303 General provisions.
91.1304 Averaging.
91.1305 Banking.
91.1306 Trading.
91.1307 Credit calculation.
91.1308 Maintenance of records.
91.1309 Reporting requirements.
91.1310 Notice of opportunity for hearing.

AUTHORITY: 42 U.S.C. 7521, 7522, 7523, 7524, 7525, 7541, 7542, 7543, 7547, 7549, 7550, and 7601(a).

SOURCE: 61 FR 52102, Oct. 4, 1996, unless otherwise noted.

EFFECTIVE DATE NOTE: At 61 FR 52102, Oct. 4, 1996, part 91 was added. This part contains information collection and recordkeeping requirements and will not become effective until approval has been given by the Office of Management and Budget.

Subpart A—General

§91.1 Applicability.

(a) This part and all its subparts apply to marine spark-ignition engines used to propel marine vessels as defined in the General Provisions of the United States Code, 1 U.S.C.3 (1992), unless otherwise indicated.

(b) Sterndrive and inboard engines are exempt from this part.

(c) Existing technology OB/PWC are exempt from §91.112 and subparts D, E, F, G, I (§§91.803 through 91.805), J, M and N through model year 2003.

§91.2 Applicable date.

This part applies to marine spark-ignition engines beginning with the 1998 model year, except where otherwise specified.

§91.3 Definitions.

The following definitions apply to this part 91. All terms not defined herein have the meaning given them in the Act.

Act means the Clean Air Act, as amended, 42 U.S.C. 7401 *et seq.*

Adjustable parameter means any device, system, or element of design which is physically capable of being adjusted (including those which are difficult to access) and which, if adjusted, may affect emissions or engine performance during emission testing or normal in-use operation.

Administrator means the Administrator of the Environmental Protection Agency or his or her authorized representative.

Auxiliary emission control device means any element of design that senses temperature, engine speed, engine RPM, transmission gear, or any other parameter for the purpose of activating, modulating, delaying, or deactivating the operation of any part of the emission control system.

Certification means, with respect to new SI marine engines, obtaining a certificate of conformity for an engine family complying with the marine SI engine emission standards and requirements specified in this part.

Emission control system means any device, system, or element of design which controls or reduces the emission of substances from an engine.

Engine as used in this part, refers to marine SI engine.

Engine family means a group of engines, as specified in §91.115.

EPA enforcement officer means any officer, employee, or authorized representative of the U.S. Environmental Protection Agency so designated in writing by the Administrator (or by his or her designee).

Exhaust emissions means matter emitted into the atmosphere from any opening downstream from the exhaust port of a marine engine.

Existing technology OB/PWC means an outboard engine or a personal watercraft engine which was in production for the 1997 or any previous model years and that did not utilize newer technologies such as four-stroke technology, direct-injection two-stroke technology, catalyst technology, or other technology used to comply with emission standards which the Administrator determines is a new type of OB/PWC technology.

Family Emission Limit (*FEL*) means an emission level that is declared by the manufacturer to serve in lieu of an emission standard for certification and for the averaging, banking, and trading program. A FEL must be expressed to the same number of decimal places as the applicable emission standard.

Fuel system means all components involved in the transport, metering, and mixture of the fuel from the fuel tank to the combustion chamber(s) including the following: Fuel tank, fuel tank cap, fuel pump, fuel lines, oil injection metering system, carburetor or fuel injection components, and all fuel system vents.

Gross power means the power measured at the crankshaft or its equivalent (for outboards, the power may be measured at the propeller shaft), the engine being equipped only with the standard accessories (such as oil

pumps, coolant pumps, and so forth) necessary for its operation on the test bed.

Identification number means a unique specification (for example, model number/serial number combination) which allows a particular marine SI engine to be distinguished from other similar engines.

Inboard engine means a four stroke marine SI engine that is designed such that the propeller shaft penetrates the hull of the marine vessel while the engine and the remainder of the drive unit is internal to the hull of the marine vessel.

Marine spark-ignition engine means any engine used to propel a marine vessel, which utilizes the spark-ignition combustion cycle.

Marine engine manufacturer means any person engaged in the manufacturing or assembling of new marine SI engines or the importing of such engines for resale, or who acts for and is under the control of any such person in connection with the distribution of such engines. A marine SI engine manufacturer does not include any dealer with respect to new marine SI engines received by such person in commerce.

Marine vessel means every description of watercraft or another artificial contrivance used, or capable of being used, as a means of transportation on water, as defined in 1 U.S.C. 3 (1992).

Marine vessel manufacturer means any person engaged in the manufacturing or assembling of new marine vessels or importing such marine vessels for resale, or who acts for and is under the control of any such person in connection with the distribution of such vehicles. A marine vessel manufacturer does not include any dealer with respect to new marine vessels received by such person in commerce.

Model year means the manufacturer's annual new model production period which includes January 1 of the calendar year for which the model year is named, ends no later than December 31 of the calendar year, and does not begin earlier than January 2 of the previous calendar year. Where a manufacturer has no annual new model production period, model year means the calendar year.

New, for purposes of this part, means a nonroad engine, nonroad vehicle, or nonroad equipment the equitable or legal title to which has never been transferred to an ultimate purchaser. Where the equitable or legal title to the engine, vehicle or equipment is not transferred to an ultimate purchaser until after the engine, vehicle, or equipment is placed into service, then the engine, vehicle, or equipment will no longer be new after it is placed into service. A nonroad engine, vehicle, or equipment is placed into service when it is used for its functional purposes. With respect to imported nonroad engines, nonroad vehicles, or nonroad equipment, the term ''new'' means an engine, vehicle, or piece of equipment that is not covered by a certificate of conformity issued under this part at the time of importation, and that is manufactured after the effective date of a regulation issued under this part which is applicable to such engine, vehicle, or equipment, or which would be applicable to such engine, vehicle, or equipment had it been manufactured for importation into the United States.

Nonroad engine has the meaning as defined in 40 CFR 89.2.

Nonroad vehicle has the meaning as defined in 40 CFR 89.2.

Nonroad equipment has the meaning as defined in 40 CFR 89.2.

Operating hours means:

(1) For engine storage areas or facilities, all times during which personnel other than custodial personnel are at work in the vicinity of the storage area or facility and have access to it.

(2) For all other areas or facilities, all times during which an assembly line is in operation or all times during which testing, maintenance, service accumulation, production or compilation of records, or any other procedure or activity related to certification testing, to translation of designs from the test stage to the production stage, or to engine manufacture or assembly is being carried out in a facility.

Outboard engine is a marine SI engine that, when properly mounted on a marine vessel in the position to operate, houses the engine and drive unit external to the hull of the marine vessel.

Personal watercraft engine (PWC) is a marine SI engine that does not meet

the definition of outboard engine, inboard engine or sterndrive engine, except that the Administrator in his or her discretion may classify a PWC as an inboard or sterndrive engine if it is comparable in technology and emissions to an inboard or sterndrive engine.

Presentation of credentials means the display of the document designating a person as an EPA enforcement officer or EPA authorized representative.

Scheduled maintenance means any adjustment, repair, removal, disassembly, cleaning, or replacement of components or systems required by the manufacturer to be performed on a periodic basis to prevent part failure or marine vessel or engine malfunction, or those actions anticipated as necessary to correct an overt indication of malfunction or failure for which periodic maintenance is not appropriate.

Sterndrive engine means a four stroke marine SI engine that is designed such that the drive unit is external to the hull of the marine vessel, while the engine is internal to the hull of the marine vessel.

Test engine means the engine or group of engines that a manufacturer uses during certification, production line and in-use testing to determine compliance with emission standards.

Ultimate purchaser means, with respect to any new marine SI engine the first person who in good faith purchases such new marine SI engine for purposes other than resale.

Used solely for competition means exhibiting features that are not easily removed and that would render its use other than in competition unsafe, impractical, or highly unlikely.

Warranty period means the period of time the engine or part is covered by the warranty provisions.

§91.4 Acronyms and abbreviations.

The following acronyms and abbreviations apply to this part 91.

AECD—Auxiliary emission control device
ASME—American Society of Mechanical Engineers
ASTM—American Society for Testing and Materials
CAA—Clean Air Act
CAAA—Clean Air Act Amendments of 1990
CLD—chemiluminescent detector
CO—Carbon monoxide
CO_2—Carbon dioxide
EPA—Environmental Protection Agency
FEL—Family Emission Limit
g/kw-hr—grams per kilowatt hour
HC—hydrocarbons
HCLD—heated chemiluminescent detector
HFID—heated flame ionization detector
ICI—Independent Commercial Importer
MY—Model Year
NDIR—non-dispersive infrared analyzer
NIST—National Institute for Standards and Testing
NO—Nitric oxide
NO_2—Nitrogen dioxide
NO_X—Oxides of nitrogen
OB—Outboard engine
O_2—Oxygen
OEM—Original engine manufacturer
PMD—paramagnetic detector
PWC—personal watercraft
RPM—revolutions per minute
SAE—Society of Automotive Engineers
SEA—Selective Enforcement Auditing
SI—Spark-ignition
U.S.C.—United States Code
VOC—Volatile organic compounds
ZROD—zirconium dioxide sensor

§91.5 Table and figure numbering; position.

(a) Tables for each subpart appear in an appendix at the end of the subpart. Tables are numbered consecutively by order of appearance in the appendix. The table title will indicate the topic.

(b) Figures for each subpart appear in an appendix at the end of the subpart. Figures are numbered consecutively by order or appearance in the appendix. The figure title will indicate the topic.

§91.6 Reference materials.

(a) *Incorporation by reference.* The documents in paragraph (b) of this section have been incorporated by reference. The incorporation by reference was approved by the Director of the Federal Register in accordance with 5 U.S.C. 552(a) and 1 CFR part 51. Copies may be inspected at U.S. EPA, OAR, Air and Radiation Docket and Information Center, 401 M St., SW., Washington, DC 20460, or at the Office of the Federal Register, 800 N. Capitol St. NW., 7th Floor, Suite 700, Washington, DC 20001.

(b) The following paragraphs and tables set forth the material that has been incorporated by reference in this part.

(1) *ASTM material.* The following table sets forth material from the

American Society for Testing and Materials which has been incorporated by reference. The first column lists the number and name of the material. The second column lists the section(s) of this part, other than § 91.6, in which the matter is referenced. The second column is presented for information only and may not be all inclusive. Copies of these materials may be obtained from American Society for Testing and Materials, 1916 Race St., Philadelphia, PA 19103.

Document number and name	40 CFR part 91 reference
ASTM D86–93:	
Standard Test Method for Distillation of Petroleum Products	Appendix A to Subpart D.
ASTM D323–90:	
Standard Test Method for Vapor Pressure of Petroleum Products (Reid Method).	Appendix A to Subpart D.
ASTM D1319–93:	
Standard Test Method for Hydrocarbon Types in Liquid Petroleum Products by Fluorescent Indicator Adsorption.	Appendix A to Subpart D.
ASTM D2622–92:	
Standard Test Method for Sulfur in Petroleum Products by X-Ray Spectrometry.	Appendix A to Subpart D.
ASTM D2699–92:	
Standard Test Method for Knock Characteristics of Motor Fuels by the Research Method.	Appendix A to Subpart D.
ASTM D2700–92:	
Standard Test Method for Knock Characteristics of Motor and Aviation Fuels by the Motor Method.	Appendix A to Subpart D.
ASTM D3231–89:	
Standard Test Method for Phosphorus in Gasoline	Appendix A to Subpart D.
ASTM D3606–92:	
Standard Test Method for Determination of Benzene and Toluene in Finished Motor and Aviation Gasoline by Gas Chromatography.	Appendix A to Subpart D.
ASTM E29–93a:	
Standard Practice for Using Significant Digits in Test Data to Determine Conformance with Specifications.	91.207; 91.120; 91.509; 91.1307.

(2) *SAE material*. The following table sets forth material from the Society of Automotive Engineers which has been incorporated by reference. The first column lists the number and name of the material. The second column lists the section(s) of this part, other than § 91.7, in which the matter is referenced. The second column is presented for information only and may not be all inclusive. Copies of these materials may be obtained from Society of Automotive Engineers International, 400 Commonwealth Dr., Warrendale, PA 15096–0001.

Document number and name	40 CFR part 91 reference
SAE J1228/ISO 8665 November 1991 Small Craft-Marine Propulsion Engine and Systems-Power Measurements and Declarations.	91.104, 91.115; 91.118; 91.207; 91.1307.
SAE J1930 June 1993 Electrical/Electronic Systems Diagnostic Terms, Definitions, Abbreviations and Acronyms.	91.113.
SAE Paper 770141 Optimization of a Flame Ionization Detector for Determination of Hydrocarbon in Diluted Automotive Exhausts, Glenn D. Reschke, 1977.	91.316

§ 91.7 Treatment of confidential information.

(a) Any manufacturer may assert that some or all of the information submitted pursuant to this part is entitled to confidential treatment as provided by part 2, subpart B, of this chapter.

(b) Any claim of confidentiality must accompany the information at the time it is submitted to EPA.

(c) To assert that information submitted pursuant to this subpart is confidential, a manufacturer must indicate clearly the items of information

claimed confidential by marking, circling, bracketing, stamping, or otherwise specifying the confidential information. Furthermore, EPA requests, but does not require, that the submitter also provide a second copy of its submittal from which all confidential information has been deleted. If a need arises to publicly release nonconfidential information, EPA will assume that the submitter has accurately deleted the confidential information from this second copy.

(d) If a claim is made that some or all of the information submitted pursuant to this subpart is entitled to confidential treatment, the information covered by that confidentiality claim will be disclosed by the Administrator only to the extent and by means of the procedures set forth in part 2, subpart B, of this chapter.

(e) Information provided without a claim of confidentiality at the time of submission may be made available to the public by EPA without further notice to the submitter, in accordance with §2.204(c)(2)(i)(A) of this chapter.

Subpart B—Emission Standards and Certification Provisions

§91.101 Applicability.

The requirements of this subpart B are applicable to all new marine spark-ignition engines subject to the provisions of subpart A of this part 91.

§91.102 Definitions.

The definitions in subpart A of this part 91 apply to this subpart. All terms not defined herein or in subpart A of this part have the meaning given them in the Act.

§91.103 Averaging, banking, and trading of exhaust emission credits.

Regulations regarding averaging, banking, and trading provisions along with applicable recordkeeping requirements are found in subpart C of this part.

§91.104 Exhaust emission standards for outboard and personal watercraft engines.

(a) New marine spark-ignition outboard and personal watercraft engines for use in the U.S. must meet the following exhaust emission standards for $HC+NO_X$. The exhaust emission standard for each model year is provided below. It is also used as input to the calculation procedure in §91.207 to determine compliance with the corporate average $HC+NO_X$ exhaust emission standard.

HYDROCARBON PLUS OXIDES OF NITROGEN EXHAUST EMISSION STANDARDS

[grams per kilowatt-hour]

Model year	P < 4.3 kW $HC+NO_X$ emission standard by model year	P > 4.3 kW $HC+NO_X$ emission standard by model year
1998	278.00	$(0.917 \times (151 + 557/P^{0.9})) + 2.44$
1999	253.00	$(0.833 \times (151 + 557/P^{0.9})) + 2.89$
2000	228.00	$(0.750 \times (151 + 557/P^{0.9})) + 3.33$
2001	204.00	$(0.667 \times (151 + 557/P^{0.9})) + 3.78$
2002	179.00	$(0.583 \times (151 + 557/P^{0.9})) + 4.22$
2003	155.00	$(0.500 \times (151 + 557/P^{0.9})) + 4.67$
2004	130.00	$(0.417 \times (151 + 557/P^{0.9})) + 5.11$
2005	105.00	$(0.333 \times (151 + 557/P^{0.9})) + 5.56$
2006 and later	81.00	$(0.250 \times (151 + 557/P^{0.9})) + 6.00$

where:

P = the average power of an engine family in kW (sales weighted). The power of each configuration is the rated output in kilowatts as determined by SAE J1228. This procedure has been incorporated by reference. See §91.6.

(b) Exhaust emissions are measured using the procedures set forth in subpart E of this part.

(c) Manufacturers must designate a Family Emission Limit (FEL) for $HC+NO_X$ for every engine family. The FEL may be equal to the emission

standard in paragraph (a) of this section. The FEL established through certification serves as the emission standard for the engine family and emissions may not exceed the FEL levels for $HC+NO_X$ for all engines sold in the engine family, for their useful life.

(d) A manufacturer must comply with a corporate average $HC+NO_X$ emission standard as determined in accordance with subpart C § 91.207.

§ 91.105 Useful life period, recall, and warranty periods.

(a) The useful life for PWC engines is a period of 350 hours of operation or 5 years of use, whichever first occurs. The useful life for Outboard marine spark-ignition engines is a period of 350 hours of operation or 10 years of use, whichever first occurs.

(b) PWC engines are subject to recall testing for a period of 350 hours of operation or 5 years of use, whichever first occurs. Outboard marine spark-ignition engines are subject to recall testing for a period of 350 hours of operation or 10 years of use, whichever first occurs. However, for purposes of this part only, if the Administrator should issue a nonconformity determination, then only those engines that are within the useful life as of the date of the nonconformity determination are subject to recall repair requirements.

(c) Warranty periods are set out in subpart M of this part.

§ 91.106 Certificate of conformity.

(a) Every manufacturer of a new marine SI engine produced during or after the 1998 model year for outboard engines and the 1999 model year for PWC engines, must obtain a certificate of conformity covering each engine family. The certificate of conformity must be obtained from the Administrator prior to selling, offering for sale, introducing into commerce, or importing into the United States the new marine SI engine.

(b) The certificate of conformity is valid for the model year for which it is designated.

§ 91.107 Application for certification.

(a) For each engine family, the engine manufacturer must submit to the Administrator a completed application for a certificate of conformity, except that with respect to an existing technology OB/PWC engine a manufacturer may, in lieu of providing such application, submit to the Administrator summary testing and other information as determined by the Administrator.

(b) The application must be approved and signed by the authorized representative of the manufacturer.

(c) The application must be updated and corrected by amendment as provided in § 91.122 to accurately reflect the manufacturer's production.

(d) Required content. Each application must include the following information:

(1) A description of the basic engine design including, but not limited to, the engine family specifications;

(2) An explanation of how the emission control system operates, including a detailed description of all emission control system components (detailed component calibrations are not required to be included, however they must be provided if requested), each auxiliary emission control device (AECD), and all fuel system components to be installed on any production or test engine(s);

(3) Proposed test fleet selection and the rationale for the test fleet selection;

(4) Special or alternative test procedures, if applicable;

(5) The description of the operating cycle and the service accumulation period necessary to break in the test engine(s) and stabilize emission levels and any maintenance scheduled;

(6) A description of all adjustable operating parameters, including the following:

(i) The nominal or recommended setting and the associated production tolerances;

(ii) The intended physically adjustable range;

(iii) The limits or stops used to establish adjustable ranges;

(iv) Production tolerances of the limits or stops used to establish each physically adjustable range; and

(v) Information relating to why the physical limits or stops used to establish the physically adjustable range of each parameter, or any other means

used to inhibit adjustment, are effective in preventing adjustment of parameters to settings outside the manufacturer's intended physically adjustable ranges on in-use engines;

(7) Regarding the averaging, banking, and trading provisions, the information specified in §91.208;

(8) The proposed maintenance and use instructions the manufacturer will furnish to the ultimate purchaser of each new engine and the proposed emission control label;

(9) All test data, for HC, CO and NO_X, obtained by the manufacturer on each test engine;

(10) A statement that the test engine(s), as described in the manufacturer's application for certification, has been tested in accordance with the applicable test procedures, utilizing the fuels and equipment described in the application, and that on the basis of such tests the engine(s) conforms to the requirements of this part; and

(11) An unconditional statement certifying that all engines in the engine family comply with all requirements of this part and the Clean Air Act.

(e) At the Administrator's request, the manufacturer must supply such additional information as may be required to evaluate the application including, but not limited to, projected marine SI engine production.

(f) (1) The Administrator may modify the information submission requirements of paragraph (d) of this section, provided the information specified therein is maintained by the engine manufacturer as required by §91.121, and amended, updated, or corrected as necessary.

(2) For the purposes of this paragraph, §91.121(a)(1) includes all information specified in paragraph (d) of this section whether or not such information is actually submitted to the Administrator for any particular model year.

(3) The Administrator may review an engine manufacturer's records at any time.

§91.108 Certification.

(a) If, after a review of the manufacturer's submitted application, or with respect to an existing technology OB/PWC engine manufacturer's summary information submitted pursuant to §91.107(a), information obtained from any inspection, and such other information as the Administrator may require, the Administrator determines that the application or summary information is complete and that the engine family meets the requirements of this part and the Clean Air Act, the Administrator shall issue a certificate of conformity for the engine family.

(b) The Administrator shall give a written explanation when certification is denied. The manufacturer may request a hearing on a denial. (*See* §91.124 for procedure.)

§91.109 Requirement of certification—closed crankcase.

(a) An engine's crankcase must be closed.

(b) For purposes of this section, *crankcase* means the housing for the crankshaft and other related internal parts.

§91.110 Requirement of certification—prohibited controls.

(a) An engine may not be equipped with an emission control device, system, or element of design for the purpose of complying with emission standards if such device, system, or element of design will cause or contribute to an unreasonable risk to public health, welfare, or safety in its operation or function.

(b) An engine with an emission control device, system, or element of design may not emit any noxious or toxic substance which would not be emitted in the operation of such engine in the absence of the device, system, or element of design except as specifically permitted by regulation.

§91.111 Requirement of certification—prohibition of defeat devices.

(a) An engine may not be equipped with a defeat device.

(b) For purposes of this section, *defeat device* means any device, system, or element of design which senses operation outside normal emission test conditions and reduces emission control effectiveness.

(1) Defeat device includes any auxiliary emission control device (AECD) that reduces the effectiveness of the

emission control system under conditions which may reasonably be expected to be encountered in normal operation and use, unless such conditions are included in the test procedure.

(2) Defeat device does not include such items which either operate only during engine starting or are necessary to protect the engine (or vehicle or equipment in which it is installed) against damage or accident during its operation.

§ 91.112 Requirement of certification—adjustable parameters.

(a) Engines equipped with adjustable parameters must comply with all requirements of this subpart for any adjustment in the physically available range.

(b) An operating parameter is not considered adjustable if it is permanently sealed by the manufacturer or otherwise not normally accessible using ordinary tools.

(c) The Administrator may require that adjustable parameters be set to any specification within the adjustable range during certification, production line testing, selective enforcement auditing or any in-use testing to determine compliance with the requirements of this part.

§ 91.113 Requirement of certification—emission control information label and engine identification number.

(a) The engine manufacturer must affix at the time of manufacture a permanent and legible label identifying each engine. The label must meet the following requirements:

(1) Be attached in such a manner that it cannot be removed without destroying or defacing the label;

(2) Be durable and readable for the entire engine life;

(3) Be secured to an engine part necessary for normal engine operation and not normally requiring replacement during engine life;

(4) Be written in English; and

(5) Be located so as to be readily visible to the average person after the engine is installed in the marine vessel.

(b) If the marine vessel obscures the label on the engine, the marine vessel manufacturer must attach a supplemental label so that this label is readily visible to the average person. The supplemental label must:

(1) Be attached in such a manner that it cannot be removed without destroying or defacing the label;

(2) Be secured to a marine vessel part necessary for normal operation and not normally requiring replacement during the marine vessel life; and

(3) Be identical to the label which was obscured.

(c) The label must contain the following information:

(1) The heading ''Emission Control Information;''

(2) The full corporate name and trademark of the engine manufacturer;

(3) The statement, ''This (vessel's engine or engine, as applicable) is certified to operate on (specify operating fuel(s));''

(4) Identification of the Exhaust Emission Control System (Abbreviations may be used and must conform to the nomenclature and abbreviations provided in SAE J1930. This procedure has been incorporated by reference. *See* § 91.6.;

(5) All engine lubricant requirements;

(6) date of manufacture [day(optional), month and year];

(7) The statement ''This engine conforms to [model year] U.S. EPA regulations for marine SI engines.'';

(8) Family Emission Limits (FELs);

(9) EPA standardized engine family designation;

(10) Engine displacement [in cubic centimeters]; and

(11) Advertised power;

(12) Engine tuneup specifications and adjustments. These should indicate the proper transmission position during tuneup, and accessories, if any, that should be in operation;

(13) Fuel requirements;

(14) Other information concerning proper maintenance and use or indicating compliance or noncompliance with other standards may be indicated on the label.

(d) If there is insufficient space on the engine to accommodate a label including all the information required in paragraph (c) of this section, the manufacturer may delete or alter the label as indicated in this paragraph. The information deleted from the label must appear in the owner's manual.

(1) Exclude the information required in paragraphs (c) (3), (4), and (5) of this section. The fuel or lubricant may be specified elsewhere on the equipment.

(2) Exclude the information required by paragraph (c)(6) of this section, if the date the engine was manufactured is stamped on the engine.

(3) For existing technology OB/PWC only, exclude the information required by paragraphs (c) (10), (11), (13), and (14) of this section.

(e) The Administrator may, upon request, waive or modify the label content requirements of paragraphs (c) and (d) of this section, provided that the intent of such requirements is met.

(f) Engine Identification Number. Each engine must have a legible, unique engine identification number permanently affixed to or engraved on the engine.

§91.114 Requirement of certification—supplying production engines upon request.

Upon the Administrator's request, the manufacturer must supply a reasonable number of production engines for testing and evaluation. These engines must be representative of typical production and supplied for testing at such time and place and for such reasonable periods as the Administrator may require.

§91.115 Certification procedure—determining engine power and engine families.

(a) Engine power must be calculated using SAE J1228. This procedure has been incorporated by reference. *See* §91.6.

(b) The manufacturer's product line must be divided into engine families as specified by paragraph (c) of this section, comprised of engines expected to have similar emission characteristics throughout their useful life periods.

(c) To be classed in the same engine family, engines must be identical in all of the following applicable respects:

(1) The combustion cycle;

(2) The cooling mechanism;

(3) The cylinder configuration (inline, vee, opposed, bore spacings, and so forth);

(4) The number of cylinders;

(5) The number of catalytic converters, location; volume, and composition; and

(6) The thermal reactor characteristics.

(d) At the manufacturer's request, engines identical in all the respects listed in paragraph (c) of this section may be further divided into different engine families if the Administrator determines that they may be expected to have different emission characteristics. This determination is based upon the consideration of features such as:

(1) The bore and stroke;

(2) The combustion chamber configuration;

(3) The intake and exhaust timing method of actuation (poppet valve, reed valve, rotary valve, and so forth);

(4) The intake and exhaust valve or port sizes, as applicable;

(5) The fuel system;

(6) The exhaust system; and

(7) The method of air aspiration.

(e) Where engines are of a type which cannot be divided into engine families based upon the criteria listed in paragraph (c) of this section, the Administrator shall establish families for those engines based upon the features most related to their emission characteristics.

(f) Upon a showing by the manufacturer that the emission characteristics during the useful life are expected to be similar, engines differing in one or more of the characteristics in paragraph (c) of this section may be grouped in the same engine family.

(g) Upon a showing by the manufacturer that the emission characteristics during the useful life are expected to be dissimilar, engines identical in all the characteristics in paragraph (c) of this section may be divided into separate engine families.

§91.116 Certification procedure—test engine selection.

(a) The manufacturer must select, from each engine family, a test engine of a configuration that the manufacturer deems to be most likely to exceed the Family Emission Limit (FEL).

(b) At the manufacturer's option, the criterion for selecting the worst case engine may be that engine configuration which has the highest weighted

brake-specific fuel consumption over the appropriate engine test cycle.

(c) The test engine must be constructed to be representative of production engines.

§ 91.117 Certification procedure—service accumulation.

(a)(1) Any engine required to be tested under § 91.118 must be operated with all emission control systems operating properly for a period sufficient to stabilize emissions prior to such testing.

(2) A manufacturer may elect to consider emission levels as stabilized when the test engine has accumulated 12 hours of service.

(b) No maintenance, other than recommended lubrication and filter changes, may be performed during service accumulation without the Administrator's approval.

(c) Service accumulation is to be performed in a manner using good engineering judgment to ensure that emissions are representative of production engines.

(d) The manufacturer must maintain, and provide to the Administrator if requested, records stating the rationale for selecting a service accumulation period different than 12 hours and records describing the method used to accumulate hours on the test engine(s).

§ 91.118 Certification procedure—testing.

(a) *Manufacturer testing*. The manufacturer must test the test engine using the specified test procedures and appropriate test cycle. All test results must be reported to the Administrator.

(1) The test procedures to be used are detailed in subpart E of this part.

(2) Emission test equipment provisions are described in subpart D of this part.

(b) *Administrator testing*. (1) The Administrator may require that any one or more of the test engines be submitted to the Administrator, at such place or places as the Administrator may designate, for the purposes of conducting emission tests. The Administrator may specify that testing will be conducted at the manufacturer's facility, in which case instrumentation and equipment specified by the Administrator must be made available by the manufacturer for test operations. Any testing conducted at a manufacturer's facility must be scheduled by the manufacturer as promptly as possible.

(2)(i) Whenever the Administrator conducts a test on a test engine, the results of that test will, unless subsequently invalidated by the Administrator, comprise the official data for the engine and the manufacturer's data will not be used in determining compliance with the Family Emission Limit (FEL).

(ii) Prior to the performance of such a test, the Administrator may adjust or cause to be adjusted any adjustable parameter of the test engine which the Administrator has determined to be subject to adjustment for testing, to any setting within the physically adjustable range of that parameter, to determine whether the engine conforms to the applicable Family Emission Limit (FEL).

(iii) For those engine parameters which the Administrator has not determined to be subject to adjustment for testing, the test engine presented to the Administrator for testing will be calibrated within the production tolerances applicable to the manufacturer specification shown on the engine label, as specified in the application for certification.

(c) *Use of carryover test data*. In lieu of testing, the manufacturer may submit, with the Administrator's approval, emission test data used to certify substantially similar engine families in previous years. This ''carryover'' test data is only allowable if the data shows the test engine would fully comply with the applicable Family Emission Limit (FEL).

(d) *Scheduled maintenance during testing*. No scheduled maintenance may be performed during testing of the engine.

(e) *Unscheduled maintenance on test engines*. (1) Manufacturers may not perform any unscheduled engine, emission control system, or fuel system adjustment, repair, removal, disassembly, cleaning, or replacement on a test engine without the advance approval of the Administrator.

(2) The Administrator may approve such maintenance if:

(i) A preliminary determination has been made that a part failure or system malfunction, or the repair of such failure or malfunction, does not render the engine unrepresentative of engines in use, and does not require direct access to the combustion chamber; and

(ii) A determination has been made that the need for maintenance or repairs is indicated by an overt malfunction such as persistent misfire, engine stall, overheating, fluid leakage, or loss of oil pressure.

(3) Emission measurements may not be used as a means of determining the need for unscheduled maintenance under paragraph (e)(2) of this section.

(4) The Administrator must have the opportunity to verify the extent of any overt indication of part failure (for example, misfire, stall), or an activation of an audible and/or visual signal, prior to the manufacturer performing any maintenance related to such overt indication or signal.

(5) Unless approved by the Administrator prior to use, engine manufacturers may not use any equipment, instruments, or tools to identify malfunctioning, maladjusted, or defective engine components unless the same or equivalent equipment, instruments, or tools are available at dealerships and other service outlets and are used in conjunction with scheduled maintenance on such components.

(6) If the Administrator determines that part failure or system malfunction occurrence and/or repair rendered the engine unrepresentative of production engines, the engine may not be used as a test engine.

(7) Unless waived by the Administrator, complete emission tests are required before and after any engine maintenance which may reasonably be expected to affect emissions.

(f) *Engine failure.* A manufacturer may not use as a test engine any engine which incurs major mechanical failure necessitating disassembly of the engine. This prohibition does not apply to failures which occur after completion of the service accumulation period.

(g) In lieu of providing or generating emission data under this section for existing technology, the Administrator may allow the manufacturer to demonstrate (on the basis of previous emission tests, development tests, or other testing information) that the engine will conform with the applicable FEL.

(h)(1) Manufacturers may select an FEL for existing technology OB/PWC through:

(i) Model year 2000 based on the function $151+557/P^{0.9}$ where P=average power of an engine family in kW (sales weighted). The power of each configuration is the rated output in kilowatts as determined by SAE J1228. (This procedure has been incorporated by reference. See §91.6). The certificate of conformity would be conditioned by requirements that the manufacturer submit test data, as determined appropriate by the Administrator under §91.118(h) by the end of model year 2000; that the FEL is revised and approved by EPA to reflect the test data; that the credits associated with the engine family are recalculated based on the difference between the old FEL and the new FEL; and that the new FEL applies to all engines covered by the certificate of conformity; or

(ii) Model year 2003 based on good engineering judgement.

(2) Upon request by the manufacturer, the Administrator has the discretion to extend the time period set forth in paragraph (h)(1) of this section for a specific engine family up to model year 2005 if the Administrator determines that an engine family will be phased out of U.S. production by model year 2005. As a condition to being granted such an extension, the manufacturer must discontinue U.S. production according to the schedule upon which the Administrator based the extension. Failure to do so by the manufacturer will void the certificate of conformity *ab initio*.

(i) A manufacturer request under paragraph (h)(2) of this section must be in writing and must apply to a specific engine family. The request must identify the engine family designation, the rationale supporting the FEL choice, the type of information used as a basis for the FEL (e.g., previous emission tests, development tests), the specific source of the information including when the information was generated, the schedule for phasing the engine family out of U.S. production, and any

other information the Administrator may require.

§ 91.119 Certification procedure—use of special test procedures.

(a) *Use of special test procedures by EPA.* The Administrator may establish special test procedures for any engine that the Administrator determines is not susceptible to satisfactory testing under the specified test procedures set forth in subpart E of this part.

(b) *Use of alternative test procedures by an engine manufacturer.* (1) A manufacturer may elect to use an alternative test procedure provided that it yields results equivalent to the results from the specified test procedure in subpart E, its use is approved in advance by the Administrator, and the basis for equivalent results with the specified test procedures is fully described in the manufacturer's application.

(2) An engine manufacturer electing to use alternate test procedures is solely responsible for the results obtained. The Administrator may reject data generated under test procedures which do not correlate with data generated under the specified procedures.

§ 91.120 Compliance with Family Emission Limits over useful life.

(a) If all test engines representing an engine family have emissions, as determined in paragraph (c)(3)(iii) of this section, less than or equal to the applicable Family Emission Limit (FEL) for each pollutant as determined according to § 91.104 (c), that family complies with the Family Emission Limit .

(b) If any test engine representing an engine family has emissions (as determined in paragraph (c)(3)(iii) of this section, greater than the applicable Family Emission Limit for any pollutant as determined according to § 91.104(c), that family will be deemed not in compliance with the Family Emission Limits.

(c)(1) The engine Family Emission Limits (FELs) apply to the emissions of engines for their useful lives.

(2) Since emission control efficiency generally decreases with the accumulation of service on the engine, deterioration factors must be used in combination with emission data engine test results as the basis for determining compliance with the standards.

(3)(i) Paragraph (c)(3)(ii) of this section describes the procedure for determining compliance of an engine with family emission limits, based on deterioration factors supplied by the manufacturer.

(ii) Separate exhaust emission deterioration factors, determined by the manufacturer, must be supplied for each engine family. The deterioration factors must be applied as follows:

(A) For marine spark-ignition engines not utilizing aftertreatment technology (for example, catalytic converters), the official exhaust emission results for each emission data engine at the selected test point are adjusted by adding the appropriate deterioration factor to the results. However, if the deterioration factor supplied by the manufacturer is less than zero, it is zero for the purposes of this paragraph.

(B) For marine spark-ignition engines utilizing aftertreatment technology (for example, catalytic converters), the official exhaust emission results for each emission data engine at the selected test point are adjusted by multiplying the results by the appropriate deterioration factor. However, if the deterioration factor supplied by the manufacturer is less than one, it is one for the purposes of this paragraph.

(iii) The emission values to compare with the Family Emission Limits (FELs) are the adjusted emission values of paragraph (c)(3)(ii) of this section, rounded to the same number of significant figures as contained in the applicable standard in accordance with ASTM E 29–93a, for each emission data engine. This procedure has been incorporated by reference. See § 91.6.

§ 91.121 Certification procedure—recordkeeping.

(a) The engine manufacturer must maintain the following adequately organized records:

(1) Copies of all applications and summary information, as applicable, filed with the Administrator;

(2) A copy of all data obtained through the production line and in-use testing programs; and

(3) A detailed history of each test engine used for certification including the following:

(i) A description of the test engine's construction, including a general description of the origin and buildup of the engine, steps taken to insure that it is representative of production engines, description of components specially built for the test engine, and the origin and description of all emission-related components;

(ii) A description of the method used for engine service accumulation, including date(s) and the number of hours accumulated;

(iii) A description of all maintenance, including modifications, parts changes, and other servicing performed, and the date(s), and reason(s) for such maintenance;

(iv) A description of all emission tests performed, including routine and standard test documentation, as specified in subpart E of this part, date(s), and the purpose of each test;

(v) A description of all tests performed to diagnose engine or emission control performance, giving the date and time of each and the reason(s) for the test; and

(vi) A description of any significant event(s) affecting the engine during the period covered by the history of the test engine but not described by an entry under one of the previous paragraphs of this section.

(b) Routine emission test data, such as test cell temperature and relative humidity at start and finish of test and raw emission results from each mode or test phase, must be retained for a period of one year after issuance of all certificates of conformity to which they relate. All other information specified in paragraph (a) of this section must be retained for a period of eight years after issuance of all certificates of conformity to which they relate.

(c) Records may be kept in any format and on any media, provided that, at the Administrator's request, organized, written records in English are promptly supplied by the manufacturer.

(d) The manufacturer must supply, at the Administrator's request, copies of any engine maintenance instructions or explanations issued by the manufacturer.

§91.122 Amending the application and certificate of conformity.

(a) The marine engine manufacturer must notify the Administrator

(1) When either an engine is to be added to a certificate of conformity or changes are to be made to a product line covered by a certificate of conformity which may potentially affect emissions, emissions durability, an emission related part, or the durability of an emission related part. Notification occurs when the manufacturer submits and EPA receives a request to amend the original application prior to either producing such engines or making such changes to a product line. For existing technology OB/PWC engines only, notification may occur periodically but must occur at least on a quarterly basis and may be submitted summarily as determined by the Administrator.

(2) When an FEL is changed for an engine family, as allowed under §91.203. Notification occurs when the manufacturer submits and EPA receives a request to amend the original application. The manufacturer may not change an FEL unless compliance under §91.207(b) is maintained through the use of the revised FEL.

(b) The request to amend the engine manufacturer's existing certificate of conformity must include the following information:

(1) A full description of the engine to be added or the change(s) to be made in production;

(2) The manufacturer's proposed test engine selection(s); and

(3) Engineering evaluations or reasons why the original test engine or FEL is or is not still appropriate.

(c) The Administrator may require the engine manufacturer to perform tests on an engine representing the engine to be added or changed.

(d) Decision by Administrator.

(1) Based on the submitted request and data derived from such testing as the Administrator may require or conduct, the Administrator must determine whether the proposed addition or change would still be covered by the certificate of conformity then in effect.

(2) If the Administrator determines that the new or changed engine(s) meets the requirements of this subpart and the Act, the appropriate certificate of conformity will be amended.

(3) If the Administrator determines that the new or changed engines would not be covered by the certificate of conformity, the Administrator must provide a written explanation to the engine manufacturer of his or her decision not to amend the certificate. The manufacturer may request a hearing on a denial. See § 91.125.

(4) If the Administrator determines that the revised FEL meets the requirements of this subpart and the Act, the appropriate certificate of conformity will be amended to reflect the revised FEL. The certificate of conformity is revised conditional upon compliance under § 91.207(b).

(e)(1) Alternatively, an engine manufacturer may make changes in or additions to production engines concurrently with requesting to amend the application or certification of conformity as set forth in paragraph (b) of this section, if the manufacturer determines that all affected engines will still meet applicable Family Emission Limits (FELs). The engine manufacturer must supply supporting documentation, test data, and engineering evaluations as appropriate to support its determination.

(2) If, after a review, the Administrator determines additional testing is required, the engine manufacturer must provide required test data within 30 days or cease production of the affected engines.

(3) If the Administrator determines that the affected engines do not meet applicable requirements, the Administrator will notify the engine manufacturer to cease production of the affected engines.

§ 91.123 Denial, revocation of certificate of conformity.

(a) If, after review of the engine manufacturer's application, request for certification, information obtained from any inspection, and any other information the Administrator may require, the Administrator determines that the test engine or engine family does not meet applicable requirements or the Family Emission Limit (FEL), the Administrator will notify the manufacturer in writing, setting forth the basis for this determination.

(b) Notwithstanding the fact that engines described in the application may comply with all other requirements of this subpart, the Administrator may deny the issuance of or revoke a previously issued certificate of conformity if the Administrator finds any one of the following infractions to be substantial:

(1) The engine manufacturer submits false or incomplete information;

(2) The engine manufacturer denies an EPA enforcement officer or EPA authorized representative the opportunity to conduct authorized inspections;

(3) The engine manufacturer fails to supply requested information or amend its application to include all engines being produced;

(4) The engine manufacturer renders inaccurate any test data which it submits or otherwise circumvents the intent of the Act or this part;

(5) The engine manufacturer denies an EPA enforcement officer or EPA authorized representative reasonable assistance (as defined in § 91.505); or

(6) The engine manufacturer fails to initiate, perform or submit required data generated from the production line and in-use testing programs to EPA.

(c) If any manufacturer knowingly commits an infraction specified in paragraph (b)(1), (b)(4), or (b)(6) of this section or knowingly commits any other fraudulent act which results in the issuance of a certificate of conformity, or fails to comply with the conditions specified in §§ 91.203(f), 91.206(d), 91.208(c) or 91.209(g), the Administrator may void such certificate *ab initio*.

(d) When the Administrator denies, revokes, or voids *ab initio* a certificate of conformity, the engine manufacturer will be provided a written determination. The manufacturer may request a hearing on the Administrator's decision.

(e) Any revocation of a certificate of conformity extends no further than to forbid the introduction into commerce of those engines previously covered by

the certificate which are still in the possession of the engine manufacturer, except in cases of such fraud or other misconduct that makes the certificate void *ab initio*.

§ 91.124 Request for hearing.

(a) An engine manufacturer may request a hearing on the Administrator's denial or revocation or voiding *ab initio* of a certificate of conformity.

(b) The engine manufacturer's request must be filed within 30 days of the Administrator's decision, be in writing, and set forth the manufacturer's objections to the Administrator's decision and data to support the objections.

(c) If, after review of the request and supporting data, the Administrator finds that the request raises a substantial and factual issue, the Administrator will grant the engine manufacturer's request for a hearing.

§ 91.125 Hearing procedures.

The hearing procedures set forth in §§ 91.513, 91.514, and 91.515 apply to this subpart.

§ 91.126 Right of entry and access.

Any engine manufacturer who has applied for certification of a new engine or engine family subject to certification testing under this subpart must admit or cause to be admitted to any applicable facilities during operating hours any EPA enforcement officer or EPA authorized representative as provided in § 91.505.

Subpart C—Averaging, Banking, and Trading Provisions

§ 91.201 Applicability.

The requirements of this subpart C are applicable to all marine spark-ignition engines subject to the provisions of subpart A of this part 91.

§ 91.202 Definitions.

The definitions in subpart A of this part apply to this subpart. The following definitions also apply to this subpart:

Averaging for marine SI engines means the exchange of emission credits among engine families within a given manufacturer's product line.

Banking means the retention of marine SI engine emission credits by the manufacturer generating the emission credits for use in future model year averaging or trading as permitted by these regulations.

Eligible sales means marine SI engines sold for purposes of being used in the United States and include any engine introduced into commerce in the U.S. to be sold for use in the U.S.

Emission credits represent the amount of emission reduction or exceedance, by a marine SI engine family, below or above the applicable emission standard, respectively. Emission reductions below the standard are considered as ''positive credits,'' while emission exceedances above the standard are considered as ''negative credits.'' In addition, ''projected credits'' refer to emission credits based on the projected applicable production/sales volume of the engine family. ''Reserved credits'' are emission credits generated within a model year waiting to be reported to EPA at the end of the model year. ''Actual credits'' refer to emission credits based on actual applicable production/sales volume as contained in the end-of-year reports submitted to EPA. Some or all of these credits may be revoked if EPA review of the end-of-year reports or any subsequent audit action(s) uncovers problems or errors.

Point of first retail sale means the point at which the engine is first sold directly to an end user. Generally, this point is the retail boat or engine dealer. If the engine is sold first to a boat or vessel manufacturer for installation in a boat or vessel, the boat or vessel manufacturer may be the point of first retail sale if the boat or vessel manufacturer can determine if the engine is or is not exported once they have sold the boat or vessel. If the boat or vessel manufacturer cannot determine if the engine is or is not exported once they have sold the boat or vessel, the engine is presumed to not be exported, unless the engine manufacturer can demonstrate otherwise. Engine manufacturers must include engines in their average if the engine is exported and subsequently imported into the United States installed in a boat or vessel and

introduced into United States commerce.

Trading means the exchange of marine engine emission credits between manufacturers.

§ 91.203 General provisions.

(a) The certification averaging, banking, and trading provisions for hydrocarbon plus oxides of nitrogen emissions from eligible marine SI engines are described in this subpart.

(b) A marine SI engine family must use the averaging provisions and may use the banking and trading provisions for hydrocarbon plus oxides of nitrogen emissions if it is subject to regulation under subpart B of this part with certain exceptions specified in paragraph (c) of this section.

(c) Manufacturers of marine SI engines may not use the banking and trading provisions for new marine SI engines:

(1) Which are exported, or

(2) Which are subject to state engine emission standards unless the manufacturer demonstrates to the Administrator that inclusion of these engines in banking and trading is appropriate.

(d) A manufacturer may certify marine SI engine families at Family Emission Limits (FELs) above or below the applicable emission standard, provided the summation of the manufacturer's projected balance of all credit transactions in a given model year is greater than or equal to zero, as determined under § 91.207.

(1) A manufacturer of an engine family with an FEL exceeding the applicable emission standard must obtain positive emission credits sufficient to address the associated credit shortfall via averaging, banking, or trading.

(2) An engine family with an FEL below the applicable emission standard may generate positive emission credits for averaging, banking, or trading, or a combination thereof. Emission credits may not be used to offset an engine family's emissions that exceed its applicable FEL. Credits may not be used to remedy nonconformity determined by a production line testing, a Selective Enforcement Audit (SEA) or by recall (in-use) testing. However, in the case of a manufacturer production line testing or SEA failure, credits may be used to allow subsequent production of engines for the family in question if the manufacturer elects to recertify to a higher FEL. In the case of production line testing a manufacturer may revise the FEL based upon production line testing results obtained under subpart F and upon Administrator approval pursuant to § 91.122(d).

(e) Credits generated in a given model year may be used in the following three model years. Credits not used by the end of the third model year after being generated are forfeited. Credits generated in one model year may not be used for prior model years, unless allowed under § 91.207.

(f) Manufacturers must demonstrate compliance under the averaging, banking, and trading provisions for a particular model year by 270 days after the model year. An engine family generating negative credits for which the manufacturer does not obtain or generate an adequate number of positive credits from the same or previous model years will violate the conditions of the certificate of conformity. The certificate of conformity may be voided *ab initio* pursuant to § 91.123 for this engine family.

§ 91.204 Averaging.

(a) Negative credits from engine families with FELs above the applicable emission standard must be offset by positive credits from engine families below the applicable emission standard, as allowed under the provisions of this subpart. Averaging of credits in this manner is used to determine compliance under § 91.207(b).

(b) For model years through 2000, outboard credits may not be summed with personal watercraft credits, or vice versa, for purposes of compliance under § 91.207, except manufacturers may, at their discretion, include personal watercraft credits with outboard credits upon demonstration to the satisfaction of the Administrator that the personal watercraft engine is installed in a hybrid vessel that is smaller than a typical sterndrive or inboard vessel and larger than a typical personal watercraft. For model year 2001 and later, manufacturers must sum credits generated from outboard and personal

watercraft to determine compliance under § 91.207.

(c) Credits used in averaging may be obtained from credits generated by another engine family as allowed under § 91.204(b), in the same model year, credits banked in the three previous model years, or credits obtained through trading.

§ 91.205 Banking.

(a) A manufacturer of a marine SI engine family with an FEL below the applicable emission standard for a given model year may bank credits in that model year for use in averaging and trading in the following three model years. Negative credits must be banked according to the requirements under § 91.207(c). Positive credits not used within the three model years after they are banked are forfeited.

(1) Early banking. (i) For outboard engines in model year (MY) 1997, a manufacturer may bank positive emission credits if the following conditions are met: the manufacturer certifies their entire marine outboard engine product line for MY 1997 under the emission standards applicable to MY 1998, the manufacturer demonstrates compliance with the corporate average standard under § 91.207(b), and the sum of positive and negative credits under § 91.207 generates positive emission credits, when the following formula is used for purposes of the applicable standard in § 91.207(a). The number of credits that may be banked under this paragraph is the number of positive emission credits generated under the provisions of the preceding sentence. Marine engines certified under the provisions of this paragraph are subject to all of the requirements of this part.

HYDROCARBON PLUS OXIDES OF NITROGEN EXHAUST EMISSION STANDARDS

[Grams per kilowatt-hour]

Model year	P<4.3 kW HC+NO_X Emission standard by model year	P>4.3 kW HC+NO_X emission standard by model year
1997 ...	276	$(0.959 \times (151 + 557/P^{0.9}) + 1.22)$

(ii) For personal watercraft engines in model year 1998, a manufacturer may bank positive emission credits if the following conditions are met: The manufacturer certifies their entire marine personal watercraft engine product line for MY 1998 under the emission standards applicable to 1998 model year outboard engine emission standards, the manufacturer demonstrates compliance with the corporate average standard under § 91.207(b), and the sum of positive and negative credits under § 91.207 generates positive emission credits, when the following formula is used for purposes of the applicable standard § 91.207(a). The number of credits that may be banked under this paragraph is the number of positive emission credits generated under the provisions of the preceding sentence. Marine engines certified under the provisions of this paragraph are subject to all of the requirements of this part.

HYDROCARBON PLUS OXIDES OF NITROGEN EXHAUST EMISSION STANDARDS

[Grams per kilowatt-hour]

Model year	P<4.3 kW HC+NO_X emission standard by model year	P> 4.3 kW HC+NO_X emission standard by model year
1998 ...	276	$(0.959 \times (151 + 557/P^{0.9}) + 1.22)$

(iii) For personal watercraft in model year 1997, a manufacturer may bank positive emission credits if the following conditions are met: the manufacturer certifies their entire marine personal watercraft engine product line for MY 1997 under the emission standards specified in the formula below for PWC, the manufacturer demonstrates compliance with the corporate average standard under § 91.207(b), and the sum of positive and negative credits under § 91.207 generates positive emission credits, when the following formula is used for purposes of the applicable standard in § 91.207(a). The number of credits that may be banked under this paragraph is the number of positive emission credits generated under the provisions of the preceding sentence. Marine engines certified under the provisions of this paragraph are subject to all of the requirements of this part.

HYDROCARBON PLUS OXIDES OF NITROGEN EXHAUST EMISSION STANDARDS

[Grams per kilowatt-hour]

Model year	P<4.3 kW $HC+NO_X$ emission standard by model year	P> 4.3 kW $HC+NO_X$ emission standard by model year
1997 ...	276	$(0.959 \times (151 + 557/P^{0.9})) + 1.22)$

(b) A manufacturer may bank actual credits only after the end of the model year and after EPA has reviewed the manufacturer's end-of-year reports. During the model year and before submittal of the end-of-year report, credits originally designated in the certification process for banking will be considered reserved and may be redesignated for trading or averaging in the end-of-year report and final report.

(c) Credits declared for banking from the previous model year that have not been reviewed by EPA may be used in averaging or trading transactions. However, such credits may be revoked at a later time following EPA review of the end-of-year report or any subsequent audit actions.

§ 91.206 Trading.

(a) A marine SI engine manufacturer may exchange emission credits with other marine SI engine manufacturers in trading. These credits must be used in the same averaging set as generated.

(b) Credits for trading can be obtained from credits banked in the three previous model years or credits generated during the model year of the trading transaction. Traded credits expire if they are not used in averaging within three model years following the model year in which they were generated.

(c) Traded credits can be used for averaging, banking, or further trading transactions.

(d) In the event of a negative credit balance resulting from a transaction, both the buyer and the seller are liable, except in cases involving fraud. Certificates of all engine families participating in a negative trade may be voided *ab initio* pursuant to § 91.123.

§ 91.207 Credit calculation and manufacturer compliance with emission standards.

(a) For each engine family, certification emission credits (positive or negative) are to be calculated according to the following equation and rounded, in accordance with ASTM E29–93a, to the nearest gram. ASTM E29–93a has been incorporated by reference. See § 91.6. Consistent units are to be used throughout the equation. The following equation is used to determine hydrocarbon plus oxides of nitrogen credit status for an engine family, whether generating positive credits or negative credits:

$$\sum_{t=1}^{\text{max actual life}} \frac{S(t) \times \text{sales} \times (\text{std} - \text{fel}) \times \text{Power} \times 0.207 \times \mu_{\text{use}}}{1.03^{t}}$$

Where:

sales = the number of eligible sales tracked to the point of first retail sale for the given engine family during the model year. Annual production projections are used to project credit availability for initial certification. Actual sales volume is used in determining actual credits for end of-year compliance determination.

t = time in model years

Power = the average power of an engine family in kW (sales weighted). The power of each configuration is the rated output in kilowatts as determined by SAE J1228. This procedure has been incorporated by reference. See § 91.6.

max actual life = maximum actual life specific to the power rating and the application; max actual life = $2\mu_{life}$

μ_{life} = average actual life in years, specific to the power rating and the application as given below.

Engine type	(μ_{life})
Outboard	$41.27 \times \left(\frac{Power}{0.746}\right)^{-0.204}$
Personal Watercraft	10

Power = as defined above.

μ_{use} = mean use in hours per year. For outboard engines,

μ_{use} = 34.8 hrs /yr. For personal watercraft, μ_{use} = 77.3 hrs/yr;

S(t) = cumulative fraction survived at time t;

$S(t) = e^{-(t \times 0.906/\mu life)4.0}$

STD = the current and applicable marine SI engine emission standard in grams per kilowatt hour as determined in § 91.104.

FEL = the family emission limit for the engine family in grams per kilowatt hour.

(b) Manufacturer compliance with the corporate average emission standard is determined on a corporate average basis at the end of each model year. A manufacturer is in compliance when the sum of positive and negative emission credits it holds is greater than or equal to zero, except as allowed under paragraph (c) of this section.

(c)(1) Outboard Engines

(i) For model year 1998, a manufacturer is in compliance when the sum of positive credits and negative emission credits it holds is greater than or equal to zero, including

(A) Credits generated in MY 1998 exceed 70% of the negative credits generated in MY 1998. The remaining negative credits (up to 30% of the total negative credits) must be banked.

(ii) For model year 1999, a manufacturer is in compliance when the positive credits generated in MY 1999 exceed the sum of 80% of the negative credits generated in MY 1999 and the negative credits banked in 1998. The remaining negative credits (up to 20% of the total negative credits) must be banked.

(iii) For model year 2000, a manufacturer is in compliance when the sum of positive and negative emission credits it holds is greater than or equal to zero, including

(A) The negative credits banked in MY 1998 and MY 1999 and

(B) Any adjustments to credits based on adjustments to FELs resulting from requirements in § 91.118(h)(1)(i). Manufacturers do not have to recalculate compliance for model years 1998 and 1999.

(2) Personal watercraft engines. (i) For model year 1999, a manufacturer is in compliance when the positive credits generated in MY 1999 exceed 50% of the negative credits generated in MY 1999. The remaining negative credits (up to 50% of the total negative credits) must be banked.

(ii) For model year 2000, a manufacturer is in compliance when the sum of positive and negative emission credits it holds is greater than or equal to zero, including

(A) The negative credits banked in 1999 and

(B) Any adjustments to credits based on adjustments to FELs resulting from requirements in § 91.118(h)(1)(i). Manufacturers do not have to recalculate compliance for model year 1999.

(d) When a manufacturer is not in compliance, the manufacturer will be in violation of these regulations and EPA may void *ab initio* the certificates of engine families for which the manufacturer has not obtained sufficient positive emission credits pursuant to § 91.123.

(e) Notwithstanding other provisions of this part, for model years beginning with model year 2000, a manufacturer having a negative credit balance during one period of up to four consecutive model years will not be considered to be in noncompliance in a model year up through and including model year 2009 where:

(1) The manufacturer has a total annual production of engines subject to regulation under this part of 1000 or less; and

(2) The manufacturer has not had a negative credit balance other than in three immediately preceding model years, except as permitted under paragraph (c) of this section; and

(3) The FEL(s) of the family or families produced by the manufacturer are no higher than those of the corresponding family or families in the previous model year, except as allowed by the Administrator; and

(4) The manufacturer submits a plan acceptable to the Administrator for coming into compliance with future model year standards including projected dates for the introduction or increased sales of engine families having FEL(s) below standard and projected dates for discontinuing or reducing sales of engines having FEL(s) above standard; and

(5)(i) The manufacturer has set its FEL using emission testing as prescribed in subpart E of this part; or

(ii) The manufacturer has set its FEL based on the equation and provisions of § 91.118(h)(1)(i) and the manufacturer has submitted appropriate test data and revised its FEL(s) and recalculated its credits pursuant to the provisions of § 91.118(h)(1); or

(iii) The manufacturer has set its FEL using good engineering judgement, pursuant to the provisions of § 91.118(h)(1)(ii) and (h)(2).

[64 FR 15239, Mar. 30, 1999, as amended at 65 FR 24314, Apr. 25, 2000]

§ 91.208 Certification.

(a) In the application for certification a manufacturer must:

(1) Submit a statement that the engines for which certification is requested will not, to the best of the manufacturer's belief, cause the manufacturer to be in noncompliance under § 91.207(b) when all credits are calculated for all the manufacturer's engine families.

(2) Declare an FEL for each engine family for HC plus NO_X. The FEL must have the same number of significant digits as the emission standard.

(3) Indicate the projected number of credits generated/needed for this family; the projected applicable production/sales volume, by quarter; and the values required to calculate credits as given in § 91.207.

(4) Submit calculations in accordance with § 91.207 of projected emission credits (positive or negative) based on quarterly production projections for each family.

(5)(i) If the engine family is projected to have negative emission credits, state specifically the source (manufacturer/engine family or reserved) of the credits necessary to offset the credit deficit according to quarterly projected production.

(ii) If the engine family is projected to generate credits, state specifically (manufacturer/engine family or reserved) where the quarterly projected credits will be applied.

(b) All certificates issued are conditional upon manufacturer compliance with the provisions of this subpart both during and after the model year of production.

(c) Failure to comply with all provisions of this subpart will be considered to be a failure to satisfy the conditions upon which the certificate was issued, and the certificate may be deemed void *ab initio* pursuant to § 91.123.

(d) The manufacturer bears the burden of establishing to the satisfaction of the Administrator that the conditions upon which the certificate was issued were satisfied or waived.

(e) Projected credits based on information supplied in the certification application may be used to obtain a certificate of conformity. However, any such credits may be revoked based on review of end-of-year reports, follow-up audits, and any other verification steps deemed appropriate by the Administrator.

§ 91.209 Maintenance of records.

(a) The manufacturer must establish, maintain, and retain the following adequately organized and indexed records for each engine produced:

(1) EPA engine family,

(2) Engine identification number,

(3) Engine model year and build date,

(4) Power rating,

(5) Purchaser and destination, and

(6) Assembly plant.

(b) The manufacturer must establish, maintain, and retain the following adequately organized and indexed records for each engine family:

(1) EPA engine family identification code,

(2) Family Emission Limit (FEL) or FELs where FEL changes have been implemented during the model year,

(3) Power rating for each configuration tested,

(4) Projected sales volume for the model year, and

(5) Actual sales volume for the model year for each FEL where FEL changes

have been implemented during the model year.

(c) Any manufacturer producing an engine family participating in trading reserved credits must maintain the following records on a quarterly basis for each such engine family:

(1) The engine family,

(2) The actual quarterly and cumulative applicable production/sales volume,

(3) The values required to calculate credits as given in §91.207,

(4) The resulting type and number of credits generated/required,

(5) How and where credit surpluses are dispersed, and

(6) How and through what means credit deficits are met.

(d) The manufacturer must retain all records required to be maintained under this section for a period of eight years from the due date for the end-of-model year report. Records may be retained as hard copy or reduced to microfilm, ADP diskettes, and so forth, depending on the manufacturer's record retention procedure; provided, that in every case all information contained in the hard copy is retained.

(e) Nothing in this section limits the Administrator's discretion in requiring the manufacturer to retain additional records or submit information not specifically required by this section.

(f) Pursuant to a request made by the Administrator, the manufacturer must submit to the Administrator the information that the manufacturer is required to retain.

(g) EPA may void *ab initio* a certificate of conformity for an engine family for which the manufacturer fails to retain the records required in this section or to provide such information to the Administrator upon request pursuant to §91.123.

§91.210 End-of-year and final reports.

(a) End-of-year and final reports must indicate the engine family, the actual sales volume, the values required to calculate credits as given in §91.207, and the number of credits generated/required. Manufacturers must also submit how and where credit surpluses were dispersed (or are to be banked) and/or how and through what means credit deficits were met. Copies of contracts related to credit trading must be included or supplied by the broker, if applicable. The report must include a calculation of credit balances to show that the credit summation is equal to or greater than zero.

(b) The sales volume for end-of-year and final reports must be based on the location of the point of first retail sale (for example, retail customer or dealer) also called the final product purchase location.

(c)(1) End-of-year reports must be submitted within 90 days of the end of the model year to: Manager, Engine Compliance Programs Group (6403–J), US Environmental Protection Agency, 1200 Pennsylvania Ave., NW., Washington, DC 20460.

(2) Final reports must be submitted within 270 days of the end of the model year to: Manager, Engine Compliance Programs Group (6403–J), U.S. Environmental Protection Agency, 1200 Pennsylvania Ave., NW., Washington, DC 20460.

(d) Failure by a manufacturer to submit any end-of-year or final reports in the specified time for all engines is a violation of §91.1103(a)(2) and section 213(d) of the Clean Air Act for each engine.

(e) A manufacturer generating credits for banking only who fails to submit end-of-year reports in the applicable specified time period (90 days after the end of the model year) may not use the credits until such reports are received and reviewed by EPA. Use of projected credits pending EPA review is not permitted in these circumstances.

(f) Errors discovered by EPA or the manufacturer in the end-of-year report, including errors in credit calculation, may be corrected in the final report up to 270 days from the end of the model year.

(g) If EPA or the manufacturer determines that a reporting error occurred on an end-of-year or final report previously submitted to EPA under this section, the manufacturer's credits and credit calculations must be recalculated. Erroneous positive credits will be void except as provided in paragraph (h) of this section. Erroneous negative credit balances may be adjusted by EPA.

(h) If within 270 days of the end of the model year, EPA review determines a reporting error in the manufacturer's favor (that is, resulting in an increased credit balance) or if the manufacturer discovers such an error within 270 days of the end of the model year, EPA shall restore the credits for use by the manufacturer.

§ 91.211 Notice of opportunity for hearing.

Any voiding of the certificate under §§ 91.203(f), 91.206(d), 91.207(d), 91.208(c), or § 91.209(g) shall be made only after the manufacturer concerned is offered an opportunity for a hearing conducted in accordance with §§ 91.512, 91.513 and 91.514 and, if a manufacturer requests such a hearing, will be made only after an initial decision by the Presiding Officer.

Subpart D—Emission Test Equipment Provisions

§ 91.301 Scope; applicability.

(a) This subpart describes the equipment required in order to perform exhaust emission tests on new marine gasoline-fueled spark-ignition propulsion engines subject to the provisions of subpart A of this part 91.

(b) Exhaust gases are sampled while the test engine is operated using a steady state test cycle on an engine dynamometer. Exhaust gas sampling may be performed using either the raw gas sampling method or the constant volume sampling (CVS) method. The exhaust gases receive specific component analysis determining concentration of pollutant, exhaust volume, the fuel flow, and the power output during each mode. Emissions are reported on a gram per brake-kilowatt hour (g/kW-hr). See subpart E of this part for a complete description of the test procedure.

(c) Additional information about system design, calibration methodologies, and so forth, for raw gas sampling can be found in part 86, subpart D of this chapter. Examples for system design, calibration methodologies, and so forth, for dilute sampling can be found in part 86, subpart N of this chapter.

§ 91.302 Definitions.

The definitions in § 91.3 apply to this subpart.

§ 91.303 Acronyms and abbreviations.

(a) The acronyms and abbreviations in § 91.5 apply to this subpart.

(b) The symbols in Table 1 in appendix A of this subpart apply to this subpart.

§ 91.304 Test equipment overview.

(a) All engines subject to this subpart are tested for exhaust emissions. Engines are operated on dynamometers meeting the specification given in § 91.305.

(b) The exhaust is tested for gaseous emissions using either a constant volume sampling (CVS) system as described in § 91.414, or using the raw gas sampling system as described in § 91.421. Both systems require analyzers (see paragraph (c) of this section) specific to the pollutant being measured.

(c) Analyzers used are a non-dispersive infrared detector (NDIR) absorption type for carbon monoxide and carbon dioxide analysis; paramagnetic detector (PMD), zirconia (ZRDO), or electrochemical type (ECS) for oxygen analysis; a flame ionization detector (FID) or heated flame ionization detector (HFID) type for hydrocarbon analysis; and a chemiluminescent detector (CLD) or heated chemiluminescent detector (HCLD) for oxides of nitrogen analysis.

§ 91.305 Dynamometer specifications and calibration accuracy.

(a) *Dynamometer specifications.* (1) The dynamometer test stand and other instruments for measurement of engine speed and torque must meet the accuracy requirements shown in Table 2 in appendix A to this subpart. The dynamometer must be capable of performing the test cycle described in § 91.410.

(b) *Dynamometer calibration accuracy.* (1) The dynamometer test stand and other instruments for measurement of engine torque and speed must meet the calibration frequency shown in Table 2 in appendix to this subpart.

(2) A minimum of three calibration weights for each range used is required. The weights must be equally spaced

and traceable to within 0.5 percent of National Institute of Standards and Testing (NIST) weights. Laboratories located in foreign countries may certify calibration weights to local government bureau standards.

§ 91.306 Dynamometer torque cell calibration.

(a)(1) Any lever arm used to convert a weight or a force through a distance into a torque must be used in a horizontal position for horizontal shaft dynamometers (± five degrees). For vertical shaft dynamometers, a pulley system may be used to convert the dynamometer's horizontal loading into the vertical plane.

(2) Calculate the indicated torque (IT) for each calibration weight to be used by:

IT=Moment Arm (meters) X Calibration Weight (Newtons)

(3) Attach each calibration weight specified in § 91.305(b)(2) to the moment arm at the calibration distance determined in paragraph (a)(2) of this section. Record the power measurement equipment response (N-m) to each weight.

(4) Compare the torque value measured to the calculated torque.

(5) The measured torque must be within two percent of the calculated torque.

(6) If the measured torque is not within two percent of the calculated torque, adjust or repair the system. Repeat steps in paragraphs (a)(1) through (a)(6) of this section with the adjusted or repaired system.

(b) Option. A master load-cell or transfer standard may be used to verify the torque measurement system.

(1) The master load-cell and read out system must be calibrated with weights specified in § 91.305(b)(2).

(2) Attach the master load-cell and loading system.

(3) Load the dynamometer to a minimum of three equally spaced torque values as indicated by the master load-cell for each in-use range used.

(4) The in-use torque measurement must be within two percent of the torque measured by the master system for each load used.

(5) If the in-use torque is not within two percent of the master torque, adjust or repair the system. Repeat steps in paragraphs (b)(2) through (b)(4) of this section with the adjusted or repaired system.

(c) Calibrated resistors may not be used for dynamometer torque transducer calibration, but may be used to span the transducer prior to engine testing.

(d) Other engine dynamometer system calibrations such as speed are performed as specified by the dynamometer manufacturer or as dictated by good engineering practice.

§ 91.307 Engine cooling system.

An engine cooling system is required with sufficient capacity to maintain the engine at normal operating temperatures as prescribed by the engine manufacturer. Auxiliary fan(s) may be used to maintain sufficient engine cooling during dynamometer operation.

§ 91.308 Lubricating oil and test fuel.

(a) *Lubricating oil.* (1) Use the engine lubricating oil which meets the marine engine manufacturer's requirements for a particular engine and intended usage. Record the specifications of the lubricating oil used for the test.

(2) For two-stroke engines, the fuel/oil mixture ratio must be that which is recommended by the manufacturer. If the flow rate of the oil in the engine is greater than two percent of the fuel flow rate, then the oil supplied to the engine must be added to the fuel flow in the emission calculations described in § 91.419 and § 91.426. Good engineering judgment may be used to estimate oil flow when oil injection is used.

(b) *Test fuels—certification.* The manufacturer must use gasoline having the specifications or substantially equivalent specifications approved by the Administrator, as specified in Table 3 in appendix A of this subpart for exhaust emission testing of gasoline fueled engines. The specification range of the fuel to be used under this paragraph must be reported in accordance with § 91.109(d).

(c) *Test fuels—service accumulation.* (1) Unleaded gasoline representative of commercial gasoline which will be generally available through retail outlets must be used in service accumulation

for gasoline-fueled marine engines. As an alternative, the certification test fuels specified under paragraph (b) of this section for engine service accumulation. Leaded fuel may not be used during service accumulation.

(2) The octane rating of the gasoline used may not be higher than 4.0 research octane numbers above the minimum recommended by the manufacturer and have a minimum sensitivity of 7.5 octane numbers, where sensitivity is defined as research octane number minus motor octane number.

(d) Other fuels may be used for testing provided:

(1) They are commercially viable,

(2) Information, acceptable to the Administrator, is provided to show that only the designated fuel would be used in customer service,

(3) Use of a fuel listed under paragraph (b) of this section would have a detrimental effect on emissions or durability; and

(4) The Administrator provides written approval of the fuel specifications prior to the start of testing.

§ 91.309 Engine intake air temperature measurement.

(a) Engine intake air temperature measurement must be made within 100 cm of the air-intake of the engine. The measurement location must be either in the supply system or in the air stream entering the engine.

(b) The temperature measurements must be accurate to within ±2 °C.

§ 91.310 Engine intake air humidity measurement.

This section refers to engines which are supplied with intake air other than the ambient air in the test cell (i.e., air which has been pumbed directly to the engine air intake system). For engines which use ambient test cell air for the engine intake air, the ambient testcell humidity measurement may be used.

(a) *Humidity conditioned air supply*. Air that has had its absolute humidity altered is considered humidity-conditioned air. For this type of intake air supply, the humidity measurements must be made within the intake air supply system, and after the humidity conditioning has taken place.

(b) *Unconditioned air supply*. Humidity measurements in unconditioned intake air supply must be made in the intake air stream entering the engine. Alternatively, the humidity measurements can be measured within the intake air stream entering the supply system.

§ 91.311 Test conditions.

(a) *General requirements*. (1) Ambient temperature levels encountered by the test engine throughout the test sequence may not be less than 20 °C nor more than 30 °C.

(2) Calculate all volumes and volumetric flow rates at standard conditions for temperature and pressure. Use these conditions consistently throughout all calculations. Standard conditions for temperature and pressure are 25 °C and 101.3 kPa.

(b) *Engine test conditions*. Measure the absolute temperature (designated as T and expressed in Kelvin) of the engine air at the inlet to the engine and the dry atmospheric pressure (designated as p_s and expressed in kPa. Determine the parameter *f* according to the following provisions:

(1) Naturally aspirated and mechanically supercharged engines:

$$f = \frac{99}{p_s} \times \left(\frac{T}{298}\right)^{0.7}$$

(2) Turbocharged engine with or without cooling of inlet air:

$$f = \left(\frac{99}{p_s}\right)^{0.7} \times \left(\frac{T}{298}\right)^{1.5}$$

(3) For a test to be recognized as valid, the parameter *f* must be between the limits as shown below:

$$0.96 < f < 1.04$$

§ 91.312 Analytical gases.

(a) The shelf life of a calibration gas may not be exceeded. Record the expiration date stated by the gas supplier for each calibration gas.

(b) *Pure gases*. The required purity of the gases is defined by the contamination limits given in parenthesis. The following gases must be available for operation.

(1) Purified nitrogen, also referred to as ''zero-grade nitrogen'' (Contamination≤1 ppm C, ≤1 ppm CO, ≤400 ppm CO_2, ≤0.1 ppm NO)

(2) Purified oxygen (Purity 99.5 percent vol O_2)

(3) Hydrogen-helium mixture (40±2 percent hydrogen, balance helium) (Contamination≤1 ppm C, ≤400 ppm CO)

(4) Purified synthetic air, also referred to as ''zero gas'' (Contamination≤1 ppm C, ≤1 ppm CO, ≤400 ppm CO_2, ≤0.1 ppm NO) (Oxygen content between 18–21 percent vol.)

(c) *Calibration and span gases.* (1) Calibration gas values are to be derived from NIST ''Standard Reference Materials'' (SRM's) or other local gas standards and are to be single blends as specified in this subsection.

(2) Mixtures of gases having the following chemical compositions must be available:

C_3 H_8 and purified synthetic air (dilute measurements); C_3 H_8 and purified nitrogen (raw measurements);

CO and purified nitrogen;

NO_X and purified nitrogen (the amount of NO_2 contained in this calibration gas must not exceed five percent of the NO content);

CO_2 and purified nitrogen.

NOTE: For the HFID or FID, the manufacturer may choose to use as a diluent span gas and the calibration gas either purified synthetic air or purified nitrogen. Any mixture of C_3 H_8 and purified synthetic air which contains a concentration of propane higher than what a gas supplier considers to be safe may be substituted with a mixture of C_3 H_8 and purified nitrogen. However, the manufacturer must be consistent in the choice of diluent (zero air or purified nitrogen) between the calibration and span gases. If a manufacturer chooses to use C_3 H_8 and purified nitrogen for the calibration gases, then purified nitrogen must be the diluent for the span gases.

(3) The true concentration of a span gas must be within ± 2 percent of the NIST gas standard. The true concentration of a calibration gas must be within ± 1 percent of the NIST gas standard. The use of precision blending devices (gas dividers) to obtain the required calibration gas concentrations is acceptable. Give all concentrations of calibration gas on a volume basis (volume percent or volume ppm).

(4) The gas concentrations used for calibration and span may also be obtained by means of a gas divider, diluting with purified N_2 or with purified synthetic air. The accuracy of the mixing device must be such that the concentration of the diluted gases may be determined to within ± 2 percent.

(d) Oxygen interference check gases must contain propane with 350 ppmC ± 75 ppmC hydrocarbon. Determine the concentration value to calibration gas tolerances by chromatographic analysis of total hydrocarbons plus impurities or by dynamic blending. Use nitrogen as the predominant diluent with the balance oxygen.

(e) Fuel for the hydrocarbon flame ionization detector (HC–FID) must be a blend of 40±2 percent hydrogen with the balance being helium. The mixture shall contain less than one ppm equivalent carbon response; 98 to 100 percent hydrogen fuel may be used with advance approval of the Administrator.

(f) *Hydrocarbon analyzer burner air.* The concentration of oxygen must be within one mole percent of the oxygen concentration of the burner air used in the latest oxygen interference check (percent O_2 I), see §91.316(d). If the difference in oxygen concentration is greater than one mole percent, then the oxygen interference must be checked and the analyzer adjusted if necessary, to meet the percent O_2 I requirements. The burner air must contain less than two ppmC hydrocarbon.

§91.313 Analyzers required.

(a) *Analyzers.* Analyze measured gases with the following instruments:

(1) *Carbon monoxide (CO) analysis.* (i) The carbon monoxide analyzer must be of the non-dispersive infrared (NDIR) absorption type.

(ii) The use of linearizing circuits is permitted.

(2) *Carbon dioxide (CO_2) analysis.* (i) The carbon dioxide analyzer must be of the non-dispersive infrared (NDIR) absorption type.

(ii) The use of linearizing circuits is permitted.

(3) *Oxygen (O_2) analysis.* Oxygen (O_2) analyzers may be of the paramagnetic (PMD), zirconia (ZRDO) or electrochemical type (ECS).

(4) *Hydrocarbon (HC) analysis.* (i) For Raw Gas Sampling, the hydrocarbon analyzer must be of the heated flame

ionization (HFID) type. For constant volume sampling, the hydrocarbon analyzer may be of the flame ionization (FID) type or of the heated flame ionization (HFID) type.

(ii) For the HFID system, if the temperature of the exhaust gas at the sample probe is below 190 °C, the temperature of the valves, pipe work, and so forth, must be controlled so as to maintain a wall temperature of 190 ± 11 °C. If the temperature of the exhaust gas at the sample probe is above 190 °C, the temperature of the valves, pipe work, and so forth, must be controlled so as to maintain a wall temperature greater than 180 °C.

(iii) For the HFID analyzer, the detector, oven, and sample-handling components within the oven must be suitable for continuous operation at temperatures to 200 °C. It must by capable of maintaining temperature within ± 5.5 °C of the set point.

(iv) Fuel and burner air must conform to the specifications in § 91.312.

(v) The percent of oxygen interference must be less than three percent, as specified in § 91.316(d).

(5) *Oxides of nitrogen (NO_X) analysis.* (i) This analysis device consists of the following items:

(A) A NO_2 to NO converter. The NO_2 to NO converter efficiency must be at least 90 percent.

(B) An ice bath located after the NO_X converter (optional).

(C) A chemiluminescent detector (CLD) or heated chemiluminescent detector (HCLD).

(ii) The quench interference must be less than three percent as measured in § 91.325.

(b) Other gas analyzers yielding equivalent results may be used with advance approval of the Administrator.

(c) The following requirements must be incorporated as indicated in systems used for testing under this subpart.

(1) Carbon monoxide and carbon dioxide measurements must be made on a dry basis (for raw exhaust measurement only). Specific requirements for the means of drying the sample can be found in § 91.313(e).

(2) Calibration or span gases for the NO_X measurement system must pass through the NO_2 to NO converter.

(d) The electromagnetic compatibility (EMC) of the equipment must be on a level as to minimize additional errors.

(e) Gas drying. Chemical dryers are not an acceptable method of removing water from the sample. Water removal by condensation is acceptable. If water is removed by condensation, the sample gas temperature or sample dew point must be monitored either within the water trap or downstream and its temperature must not exceed 7 °C. A water trap performing this function is an acceptable method. Means other than condensation may be used only with prior approval from the Administrator.

§ 91.314 Analyzer accuracy and specifications.

(a) *Measurement accuracy—general.* The analyzers must have a measuring range which allows them to measure the concentrations of the exhaust gas sample pollutants with the accuracies shown in Table 2 in appendix A to this subpart.

(1) *Precision.* The precision of the analyzer must be, at worst, ± 1 percent of full-scale concentration for each range used. The precision is defined as 2.5 times the standard deviation(s) of 10 repetitive responses to a given calibration or span gas.

(2) *Noise.* The analyzer peak-to-peak response to zero and calibration or span gases over any 10-second period may not exceed two percent of full-scale chart deflection on all ranges used.

(3) *Zero drift.* The analyzer zero-response drift during a one-hour period must be less than two percent of full-scale chart deflection on the lowest range used. The zero-response is defined as the mean response including noise to a zero-gas during a 30-second time interval.

(4) *Span drift.* The analyzer span drift during a one-hour period must be less than two percent of full-scale chart deflection on the lowest range used. The analyzer span is defined as the difference between the span-response and the zero-response. The span-response is defined as the mean response including noise to a span gas during a 30-second time interval.

(b) *Operating procedure for analyzers and sampling system.* Follow the start-up and operating instructions of the instrument manufacturer. Adhere to the minimum requirements given in §91.316 to §91.325 and §91.409.

(c) *Emission measurement accuracy—bag sampling.* (1) Good engineering practice dictates that exhaust emission sample analyzer readings below 15 percent of full scale chart deflection should generally not be used.

(2) Some high resolution read-out systems, such as computers, data loggers, and so forth, can provide sufficient accuracy and resolution below 15 percent of full scale. Such systems may be used provided that additional calibrations are made to ensure the accuracy of the calibration curves. The following procedure for calibration below 15 percent of full scale may be used:

NOTE: If a gas divider is used, the gas divider must conform to the accuracy requirements as follows: The use of precision blending devices (gas dividers) to obtain the required calibration gas concentrations is acceptable, provided that the blended gases are accurate to within ± 1.5 percent of NIST gas standards or other gas standards which have been approved by the Administrator. This accuracy implies that primary gases used for blending must be ''named'' to an accuracy of at least ± 1 percent, traceable to NIST or other approved gas standards.

(i) Span the full analyzer range using a top range calibration gas. The span gases must be accurate to within ± 2 percent of NIST gas standards or other gas standards which have been approved by the Administrator.

(ii) Generate a calibration curve according to, and meeting the requirements of the sections describing analyzer calibrations which are found in §§91.316, 91.317, 91.318, and 91.320 of this chapter.

(iii) Select a calibration gas (a span gas may be used for calibrating the CO_2 analyzer) with a concentration between the two lowest non-zero gas divider increments. This gas must be ''named'' to an accuracy of ± 2 percent of NIST gas standards, or other standards approved by the Administrator.

(iv) Using the calibration curve fitted to the points generated in paragraphs (c)(2) (i) and (ii) of this section, check the concentration of the gas selected in paragraph (c)(2)(iii) of this section. The concentration derived from the curve must be within ± 2.3 percent (± 2.8 percent for CO_2 span gas) of the gas' original named concentration.

(v) Provided the requirements of paragraph (c)(2)(iv) of this section are met, use the gas divider with the gas selected in paragraph (c)(2)(iii) of this section and determine the remainder of the calibration points. Fit a calibration curve per §§91.316, 91.317, 91.318, and 91.320 of this chapter for the entire analyzer range.

(d) *Emission measurement accuracy—continuous sampling.* Analyzers used for continuous analysis must be operated such that the measured concentration falls between 15 and 100 percent of full scale chart deflection. Exceptions to these limits are:

(1) The analyzer's response may be less than 15 percent or more than 100 percent of full scale if automatic range change circuitry is used and the limits for range changes are between 15 and 100 percent of full scale chart deflection;

(2) The analyzer's response may be less than 15 percent of full scale if:

(i) Alternative in paragraph (c)(2) of this section is used to ensure that the accuracy of the calibration curve is maintained below 15 percent; or

(ii) The full scale value of the range is 155 ppmC or less; or

(iii) The emissions from the engine are erratic and the integrated chart deflection value for the cycle is greater than 15 percent of full scale; or

(iv) The contribution of all data read below the 15 percent level is less than 10 percent by mass of the final test results.

§91.315 Analyzer initial calibration.

(a) *Warming-up time.* Follow the warm-up time according to the recommendations of the manufacturer. If not specified, a minimum of two hours should be allowed for warming up the analyzers.

(b) *NDIR and HFID analyzer.* Tune and maintain the NDIR analyzer per the instrument manufacturer recommendations. The combustion flame of the HFID analyzer must be optimized in order to meet the specifications in §91.316(b).

(c) *Zero setting and calibration.* Using purified synthetic air (or nitrogen), set

the CO, CO_2, NO_X and HC analyzers at zero. Connect the appropriate calibrating gases to the analyzers and record the values. The same gas flow rates shall be used as when sampling exhaust.

(d) *Rechecking of zero setting*. Recheck the zero setting and, if necessary, repeat the procedure described in paragraph (c) of this section.

§ 91.316 Hydrocarbon analyzer calibration.

(a) Calibrate the FID and HFID hydrocarbon analyzer as described in this section. Operate the HFID to a set point ± 5.5 °C between 185 and 197 °C.

(b) Initial and periodic optimization of detector response. Prior to introduction into service and at least annually thereafter, adjust the FID and HFID hydrocarbon analyzer for optimum hydrocarbon response as specified by this paragraph. Alternative methods yielding equivalent results may be used, if approved in advance by the Administrator.

(1) Follow good engineering practices for initial instrument start-up and basic operating adjustment using the appropriate fuel (see § 91.312) and purified synthetic air or zero-grade nitrogen.

(2) One of the following procedures is required for FID or HFID optimization:

(i) The procedure outlined in Society of Automotive Engineers (SAE) paper No. 770141, ''Optimization of Flame Ionization Detector for Determination of Hydrocarbons in Diluted Automobile Exhaust''; author, Glenn D. Reschke. This procedure has been incorporated by reference. See § 91.6.

(ii) The HFID optimization procedures outlined in § 86.331–79 of this chapter.

(iii) Alternative procedures may be used if approved in advance by the Administrator.

(3) After the optimum flow rates have been determined, they are recorded for future reference.

(c) Initial and periodic calibration. Prior to introduction into service and monthly thereafter, or within one month prior to the certification test, calibrate the FID or HFID hydrocarbon analyzer on all normally used instrument ranges, using the steps in this paragraph. Use the same flow rate and pressures as when analyzing samples. Introduce calibration gases directly at the analyzer. An optional method for dilute sampling described in § 86.1310(b)(3)(i) of this chapter may be used.

(1) Adjust analyzer to optimize performance.

(2) Zero the hydrocarbon analyzer with purified synthetic air or zero-grade nitrogen.

(3) Calibrate on each used operating range with calibration gases having nominal concentrations between 10 and 90 percent of that range. A minimum of six evenly spaced points covering at least 80 percent of the 10 to 90 percent range (64 percent) is required (see following table).

Example calibration points (percent)	Acceptable for calibration?
20, 30, 40, 50, 60, 70	No, range covered is 50? percent, not 64 percent.
20, 30, 40, 50, 60, 70, 80, 90	Yes.
10, 25, 40, 55, 70, 85	Yes
10, 30, 50, 70, 90	No, though equally spaced and entire range covered, a minimum of six points is needed

(4) For each range calibrated, if the deviation from a least-squares best-fit straight line is two percent or less of the value at each data point, calculate concentration values by use of a single calibration factor for that range. If the deviation exceeds two percent at any point, use the best-fit non-linear equation which represents the data to within two percent of each test point to determine concentration.

(d) Oxygen interference optimization. Choose a range where the oxygen interference check gases will fall in the upper 50 percent. Conduct the test, as outlined in this paragraph, with the oven temperature set as required by the instrument manufacturer. Oxygen interference check gas specifications are found in § 91.312(d).

(1) Zero the analyzer.

(2) Span the analyzer with the 21 percent oxygen blend.

(3) Recheck zero response. If it has changed more than 0.5 percent of full scale repeat paragraphs (d)(1) and (d)(2) of this section to correct the problem.

(4) Introduce the 5 percent and 10 percent oxygen interference check gases.

(5) Recheck the zero response. If it has changed more than ± 1 percent of full scale, repeat the test.

(6) Calculate the percent of oxygen interference (designated as percent O_2 I) for each mixture in paragraph (d)(4) of this section according to the following equation:

$$\text{percent } O_2 I = \frac{\text{B Analyzer response (ppmC)}}{\text{B}} \times (100)$$

$$\text{analyzer response} = \left(\frac{\text{A}}{\text{\% of fullscale analyzer response due to A}} \times (\text{\% of fullscale analyzer response due to B}) \right)$$

Where:

A=hydrocarbon concentration (ppmC) of the span gas used in paragraph (d)(2) of this section.

B=hydrocarbon concentration (ppmC) of the oxygen interference check gases used in paragraph (d)(4) of this section.

(7) The percent of oxygen interference (designated as percent O_2 I) must be less than ± three percent for all required oxygen interference check gases prior to testing.

(8) If the oxygen interference is greater than the specifications, incrementally adjust the air flow above and below the manufacturer's specifications, repeating paragraphs (d)(1) through (d)(7) of this section for each flow.

(9) If the oxygen interference is greater than the specification after adjusting the air flow, vary the fuel flow and thereafter the sample flow, repeating paragraphs (d)(1) through (d)(7) of this section for each new setting.

(10) If the oxygen interference is still greater than the specifications, repair or replace the analyzer, FID fuel, or burner air prior to testing. Repeat this section with the repaired or replaced equipment or gases.

§91.317 Carbon monoxide analyzer calibration.

(a) Calibrate the NDIR carbon monoxide analyzer described in this section.

(b) Initial and periodic interference check. Prior to its introduction into service and annually thereafter, check the NDIR carbon monoxide analyzer for response to water vapor and CO_2≦

(1) Follow good engineering practices for instrument start-up and operation. Adjust the analyzer to optimize performance on the most sensitive range to be used.

(2) Zero the carbon monoxide analyzer with either purified synthetic air or zero-grade nitrogen.

(3) Bubble a mixture of three percent CO_2 in N_2 through water at room temperature and record analyzer response.

(4) An analyzer response of more than one percent of full scale for ranges above 300 ppm full scale or more than three ppm on ranges below 300 ppm full scale requires corrective action. (Use of conditioning columns is one form of corrective action which may be taken.)

(c) Initial and periodic calibration. Calibrate the NDIR carbon monoxide analyzer prior to its introduction into service and monthly thereafter.

(1) Adjust the analyzer to optimize performance.

(2) Zero the carbon monoxide analyzer with either purified synthetic air or zero-grade nitrogen.

(3) Calibrate on each used operating range with carbon monoxide-in-N_2 calibration gases having nominal concentrations between 10 and 90 percent

of that range. A minimum of six evenly spaced points covering at least 80 percent of the 10 to 90 range (64 percent) is required (see following table).

Example calibration points (percent)	Acceptable for calibration?
20, 30, 40, 50, 60, 70	No, range covered is 50 percent, not 64 percent.
20, 30, 40, 50, 60, 70, 80, 90	Yes.
10, 25, 40, 55, 70, 85	Yes.
10, 30, 50, 70, 90	No, though equally spaced and entire range covered, a minimum of six points is needed.

(4) Additional calibration points may be generated. For each range calibrated, if the deviation from a least-squares best-fit straight line is two percent or less of the value at each data point, concentration values may be calculated by use of a single calibration factor for that range. If the deviation exceeds two percent at any point, use the best-fit non-linear equation which represents the data to within two percent of each test point to determine concentration.

§ 91.318 Oxides of nitrogen analyzer calibration.

(a) Calibrate the chemiluminescent oxides of nitrogen analyzer as described in this section.

(b) Initial and periodic interference. Prior to its introduction into service, and monthly thereafter, check the chemiluminescent oxides of nitrogen analyzer for NO_2 to NO converter efficiency. Figure 2 in appendix B of this subpart is a reference for the following paragraphs:

(1) Follow good engineering practices for instrument start-up and operation. Adjust the analyzer to optimize performance.

(2) Zero the oxides of nitrogen analyzer with purified synthetic air or zero-grade nitrogen.

(3) Connect the outlet of the NO_X generator to the sample inlet of the oxides of nitrogen analyzer which has been set to the most common operating range.

(4) Introduce into the NO_X generator analyzer-system an NO-in-nitrogen (N_2) mixture with an NO concentration equal to approximately 80 percent of the most common operating range. The NO_2 content of the gas mixture must be less than 5 percent of the NO concentration.

(5) With the oxides of nitrogen analyzer in the NO mode, record the concentration of NO indicated by the analyzer.

(6) Turn on the NO_X generator O_2 (or air) supply and adjust the O_2 (or air) flow rate so that the NO indicated by the analyzer is about 10 percent less than indicated in paragraph (b)(5) of this section. Record the concentration of NO in this NO+O_2 mixture as value ''c.''

(7) Switch the NO_X generator to the generation mode and adjust the generation rate so that the NO measured on the analyzer is 20 percent of that measured in paragraph (b)(5) of this section. There must be at least 10 percent unreacted NO at this point. Record the concentration of residual NO as value ''d.''

(8) Switch the oxides of nitrogen analyzer to the NO_X mode and measure total NO_X. Record this value as ''a.''

(9) Switch off the NO_X generator but maintain gas flow through the system. The oxides of nitrogen analyzer will indicate the NO_X in the NO+O_2 mixture. Record this value as ''b.''

(10) Turn off the NO_X generator O_2 (or air) supply. The analyzer will now indicate the NO_X in the original NO-in-N_2 mixture. This value should be no more than 5 percent above the value indicated in paragraph (b)(4) of this section.

(11) Calculate the efficiency of the NO_X converter by substituting the concentrations obtained into the following equation:

$$\text{percent efficiency} = \left(1 + \frac{ab}{cd}\right) \times 100$$

Where:

a=concentration obtained in paragraph (b)(8) of this section,

b=concentration obtained in paragraph (b)(9) of this section,

c=concentration obtained in paragraph (b)(6) of this section,

d=concentration obtained in paragraph (b)(7) of this section.

If converter efficiency is not greater than 90 percent, corrective action is required.

(c) Initial and periodic calibration. Prior to its introduction into service, and monthly thereafter, calibrate the chemiluminescent oxides of nitrogen analyzer on all normally used instrument ranges. Use the same flow rate as when analyzing samples. Proceed as follows:

(1) Adjust analyzer to optimize performance.

(2) Zero the oxides of nitrogen analyzer with zero-grade air or zero-grade nitrogen.

(3) Calibrate on each normally used operating range with NO-in-N_2 calibration gases with nominal concentrations between 10 and 90 percent of that range. A minimum of six evenly spaced points covering at least 80 percent of the 10 to 90 percent range (64 percent) is required (see following table).

Example calibration points (percent)	Acceptable for calibration?
20, 30, 40, 50, 60, 70	No, range covered is 50 percent, not 64 percent.
20, 30, 40, 50, 60, 70, 80, 90	Yes.
10, 25, 40, 55, 70, 85	Yes.
10, 30, 50, 70, 90	No, though equally spaced and entire range covered, a minimum of six points is needed.

(4) Additional calibration points may be generated. For each range calibrated, if the deviation from a least-squares best-fit straight line is two percent or less of the value at each data point, concentration values may be calculated by use of a single calibration factor for that range. If the deviation exceeds two percent at any point, use the best-fit non-linear equation which represents the data to within two percent of each test point to determine concentration.

(d) The initial and periodic interference, system check, and calibration test procedures specified in §86.332–79 of this chapter may be used in lieu of the procedures specified in this section.

§91.319 NO_X converter check.

(a) The efficiency of the converter used for the conversion of NO_2 to NO is tested as given in paragraphs (a)(1) through (a)(8) of this section (see Figure 2 in appendix B to this subpart).

(1) Using the test setup as shown in Figure 2 in appendix B to this subpart (see also §91.318 of this chapter) and the procedures described in paragraphs (a)(2) through (a)(8) of this section, test the efficiency of converters by means of an ozonator.

(2) Calibrate the HCLD in the most common operating range following the manufacturer's specifications using zero and span gas (the NO content of which must amount to about 80 percent of the operating range and the NO_2 concentration of the gas mixture less than 5 percent of the NO concentration). The NO_X analyzer must be in the NO mode so that the span gas does not pass through the converter. Record the indicated concentration.

(3) Calculate the efficiency of the NO_X converter as described in §91.318(b).

(4) Via a T-fitting, add oxygen continuously to the gas flow until the concentration indicated is about 20 percent less than the indicated calibration concentration given in paragraph (a)(2) of this section. Record the indicated concentration as ''c''. The ozonator is kept deactivated throughout the process.

(5) Activate the ozonator to generate enough ozone to bring the NO concentration down to about 20 percent (minimum 10 percent) of the calibration concentration given in paragraph (a)(2) of this section. Record the indicated concentration as ''d''.

NOTE: If, with the analyzer in the most common range the NO_X converter cannot give a reduction from 80 percent to 20 percent, then use the highest range which will give the reduction.

(6) Switch the NO analyzer to the NO_X mode, which means that the gas mixture (consisting of NO, NO_2, O_2 and N_2) now passes through the converter. Record the indicated concentration as ''a''.

(7) Deactivate the ozonator. The mixture of gases described in paragraph (a)(6) of this section passes through the converter into the detector. Record the indicated concentration as ''b''.

(8) Switched to NO mode with the ozonator deactivated, the flow of oxygen or synthetic air is also shut off. The NO_X reading of the analyzer may not deviate by more than ± 5 percent of the theoretical value of the figure given in paragraph (a)(2) of this section.

(b) The efficiency of the converter must be tested prior to each calibration of the NO_X analyzer.

(c) The efficiency of the converter may not be less than 90 percent.

§ 91.320 Carbon dioxide analyzer calibration.

(a) Prior to its introduction into service, and monthly thereafter, or within one month prior to the certification test, calibrate the NDIR carbon dioxide analyzer as follows:

(1) Follow good engineering practices for instrument start-up and operation. Adjust the analyzer to optimize performance.

(2) Zero the carbon dioxide analyzer with either purified synthetic air or zero-grade nitrogen.

(3) Calibrate on each normally used operating range with carbon dioxide-in-N_2 calibration or span gases having nominal concentrations between 10 and 90 percent of that range. A minimum of six evenly spaced points covering at least 80 percent of the 10 to 90 percent range (64 percent) is required (see following table).

Example calibration points (percent)	Acceptable for calibration?
20, 30, 40, 50, 60, 70	No, range covered is 50 percent, not 64 percent.
20, 30, 40, 50, 60, 70, 80, 90	Yes.
10, 25, 40, 55, 70, 85	Yes.
10, 30, 50, 70, 90	No, though equally spaced and entire range covered, a minimum of six points is needed.

(4) Additional calibration points may be generated. For each range calibrated, if the deviation from a least-squares best-fit straight line is 2 percent or less of the value at each data point, concentration values may be calculated by use of a single calibration factor for that range. If the deviation exceeds 2 percent at any point, use the best-fit non-linear equation which represents the data to within 2 percent of each test point to determine concentration.

(b) The initial and periodic interference, system check, and calibration test procedures specified in §§ 86.316, 86.319, 86.320, 86.321, and 86.322 of this chapter may be used in lieu of the procedures in this section.

§ 91.321 NDIR analyzer calibration.

(a) *Detector optimization*. If necessary, follow the manufacturer's instructions for initial start-up and basic operating adjustments.

(b) *Calibration curve*. Develop a calibration curve for each range used as follows:

(1) Zero the analyzer.

(2) Span the analyzer to give a response of approximately 90 percent of full-scale chart deflection.

(3) Recheck the zero response. If it has changed more than 0.5 percent of full scale, repeat the steps given in paragraphs (b)(1) and (b)(2) of this section.

(4) Record the response of calibration gases having nominal concentrations between 10 and 90 percent of full-scale concentration. A minimum of six evenly spaced points covering at least 80 percent of the 10 to 90 percent range (64 percent) is required (see following table).

Example calibration points (percent)	Acceptable for calibration?
20, 30, 40, 50, 60, 70	No, range covered is 50 percent, not 64 percent.
20, 30, 40, 50, 60, 70, 80, 90	Yes.
10, 25, 40, 55, 70, 85	Yes.

Example calibration points (percent)	Acceptable for calibration?
10, 30, 50, 70, 90	No, though equally spaced and entire range covered, a minimum of six points is needed.

(5) Generate a calibration curve. The calibration curve must be of fourth order or less, have five or fewer coefficients, and be of the form of equation (1) or (2). Include zero as a data point. Compensation for known impurities in the zero gas can be made to the zero-data point. The calibration curve must fit the data points within 2 percent of point or one percent of full scale, whichever is less.

$$y = Ax^4 + Bx^3 + Cx^2 + Dx + E \qquad (1)$$

$$y = \frac{x}{Ax^4 + Bx^3 + Cx^2 + Dx + E} \qquad (2)$$

y=concentration
x=chart deflection

(6) Option. A new calibration curve need not be generated if:

(i) A calibration curve conforming to paragraph (b)(5) of this section exists;

(ii) The responses generated in paragraph (b)(4) of this section are within one percent of full scale or two percent of point, whichever is less, of the responses predicted by the calibration curve for the gases used in paragraph (b)(4) of this section.

(7) If multiple range analyzers are used, the lowest range used must meet the curve fit requirements below 15 percent of full scale.

(c) *Linear calibration criteria.* If any range is within 2 percent of being linear, a linear calibration may be used. To determine if this criterion is met:

(1) Perform a linear least-square regression on the data generated. Use an equation of the form y=mx, where x is the actual chart deflection and y is the concentration.

(2) Use the equation z=y/m to find the linear chart deflection (designated as z) for each calibration gas concentration (designated as y).

(3) Determine the linearity (designated as percent L) for each calibration gas by:

$$\text{percent L} = \frac{(zx)}{\text{Fullscale linear chart deflection}}(100)$$

(4) The linearity criterion is met if the percent L is less than ± 2 percent for each data point generated. For each emission test, use a calibration curve of the form Y=mx. The slope (designated as m) is defined for each range by the spanning process.

§91.322 Calibration of other equipment.

Calibrate other test equipment as often as required by the manufacturer or as necessary according to good engineering practice.

§91.323 Analyzer bench checks.

(a) Prior to initial use and after major repairs, verify that each analyzer complies with the specifications given in Table 2 in appendix A to this subpart.

(b) If a stainless steel NO_2 to NO converter is used, condition all new or replacement converters. The conditioning consists of either purging the converter with air for a minimum of four hours or until the converter efficiency is greater than 90 percent. The converter must be at operational temperature while purging. Do not use this procedure prior to checking converter efficiency on in-use converters.

§91.324 Analyzer leakage check.

(a) *Vacuum side leak check.* (1) Check any location within the analysis system where a vacuum leak could affect the test results.

(2) The maximum allowable leakage rate on the vacuum side is 0.5 percent of the in-use flow rate for the portion of the system being checked. The analyzer flows and bypass flows may be used to estimate the in-use flow rates.

(3) The sample probe and the connection between the sample probe and valve V2 (see Figure 1 in appendix B of this subpart) may be excluded from the leak check.

(b) *Pressure side leak check.* Substantial leaks of the sample on the pressure side of the system may impact sample integrity if the leaks are of sufficient magnitude. As a safety precaution, it is good engineering practice to perform periodic pressure side leak checks on the sampling system.

§ 91.325 Analyzer interference checks.

(a) Gases present in the exhaust other than the one being analyzed can interfere with the reading in several ways. Positive interference occurs in NDIR and PMD instruments when the interfering gas gives the same effect as the gas being measured, but to a lesser degree. Negative interference occurs in NDIR instruments by the interfering gas broadening the absorption band of the measured gas, and in CLD instruments by the interfering gas quenching the radiation. The interference checks described in this section are to be made initially and after any major repairs that could affect analyzer performance.

(b) CO analyzer water and CO_2 interference checks. Bubble through water at room temperature a CO_2 span gas having a concentration of between 80 percent and 100 percent inclusive of full scale of the maximum operating range used during testing and record the analyzer response. For dry measurements, this mixture may be introduced into the sample system prior to the water trap. The analyzer response must not be more than one percent of full scale for ranges equal to or above 300 ppm or more than three ppm for ranges below 300 ppm.

(c) NO_X analyzer quench check. The two gases of concern for CLD (and HCLD) analyzers are CO_2 and water vapor. Quench responses to these two gases are proportional to their concentrations and, therefore, require test techniques to determine quench at the highest expected concentrations experienced during testing.

(1) NO_X analyzer CO_2 quench check. (i) Pass a CO_2 span gas having a concentration of 80 percent to 100 percent of full scale of the maximum operating range used during testing through the CO_2 NDIR analyzer and record the value as ''a.''

(ii) Dilute the CO_2 span gas approximately 50 percent with NO span gas and pass through the CO_2 NDIR and CLD (or HCLD). Record the CO_2 and NO values as ''b'' and ''c'', respectively.

(iii) Shut off the CO_2 and pass only the NO span gas through the CLD (or HCLD). Record the NO value recorded as ''d.''

(iv) Calculate the percent CO_2 quench as follows, which may not exceed three percent:

$$\text{percent } CO_2 \text{ quench} = 100 \times \left(1 \frac{(c \times a)}{(d \times a)(d \times b)}\right) \times (a / b)$$

Where:
a=Undiluted CO_2 concentration (percent)
b=Diluted CO_2 concentration (percent)
c=Diluted NO concentration (ppm)
d=Undiluted NO concentration (ppm)

(2) NO_X analyzer water quench check. (i) This check applies to wet measurements only. Pass an NO span gas having a concentration of 80 percent to 100 percent of full scale of a normal operating range through the CLD (or HCLD). Record the response as ''D.'' Bubble through water at room temperature the NO span gas and pass it through the CLD (or HCLD). Record the analyzers response as ''AR.'' Determine and record the analyzers absolute operating pressure and the bubbler water temperature. (It is important that the NO span gas contains minimal NO_2 concentration for this check. No allowance for absorption of NO_2 in

water has been made in the following quench calculations.)

(ii) Calculations for water quench must consider dilution of the NO span gas with water vapor and scaling of the water vapor concentration of the mixture to that expected during testing. Determine the mixture's saturated vapor pressure (designated as ''Pwb'') that corresponds to the bubbler water temperature. Calculate the water concentration (''Z1'', percent) in the mixture by the following equation:

$$Z1 = 100 \times (Pwb / GP)$$

Where:

GP=the analyzer's standard operating pressure (pascals)

(iii) Calculate the expected dilute NO span gas and water vapor mixture concentration (designated as ''D1'') by the following equation:

$$D1 = D \times (1Z1 / 100)$$

§ 91.326 Pre- and post-test analyzer calibration.

Calibrate the operating range of each analyzer used during the test prior to and after each test in accordance with the following procedure (A chronic need for parameter adjustment can indicate a need for instrument maintenance.):

(a) Make the calibration using a zero gas and a span gas whose nominal value is between 80 percent and 100 percent of full scale, inclusive, of the measuring range.

(b) Use the same analyzer(s) flow rate and pressure as that used during exhaust emission test sampling.

(c) Warm-up and stabilize the analyzer(s) before the calibration is made.

(d) If necessary, clean and/or replace filter elements before calibration is made.

(e) Calibrate analyzer(s) as follows:

(1) Zero the analyzer using the appropriate zero gas. Adjust analyzer zero if necessary. Zero reading should be stable.

(2) Span the analyzer using the appropriate span gas for the range being calibrated. Adjust the analyzer to the calibration set point if necessary.

(3) Recheck zero and span set points.

(4) If the response of the zero gas or span gas differs more than one percent of full scale, then repeat paragraphs (e)(1) through (3) of this section.

§ 91.327 Sampling system requirements.

(a) *Sample component surface temperature.* For sampling systems which use heated components, use engineering judgment to locate the coolest portion of each component (pump, sample line section, filters, and so forth) in the heated portion of the sampling system that has a separate source of power or heating element. Monitor the temperature at that location. If several components are within an oven, then only the surface temperature of the component with the largest thermal mass and the oven temperature need be measured.

(b) If water is removed by condensation, monitor the sample gas temperature or sample dew point either within the water trap or downstream. It may not exceed 7 °C.

§ 91.328 Measurement equipment accuracy/calibration frequency table.

(a) The accuracy of measurements must be such that the maximum tolerances shown in Table 2 in appendix A to this subpart are not exceeded.

(b) Calibrate all equipment and analyzers according to the frequencies shown in Table 2 in appendix A to this subpart.

(c) Prior to initial use and after major repairs, bench check each analyzer (see § 91.323).

(d) Calibrate as specified in § 91.306 and §§ 91.315 through 91.322.

(e) At least monthly, or after any maintenance which could alter calibration, perform the following calibrations and checks.

(1) Leak check the vacuum side of the system (see § 91.324(a)).

(2) Verify that the automatic data collection system (if used) meets the requirements found in Table 2 in appendix A to this subpart.

(3) Check the fuel flow measurement instrument to insure that the specifications in Table 2 in appendix A to this subpart are met.

(f) Verify that all NDIR analyzers meet the water rejection ratio and the CO_2 rejection ratio as specified in § 91.325.

(g) Verify that the dynamometer test stand and power output instrumentation meet the specifications in Table 2 in appendix A to this subpart.

§ 91.329 Catalyst thermal stress test.

(a) *Oven characteristics*. The oven used for termally stressing the test catalyst must be capable of maintaining a temperature of 500 ± 5 °C and 1000 ± 10 °C.

(b) *Evaluation gas composition*. (1) A synthetic exhaust gas mixture is used for evaluating the effect of thermal stress on catalyst conversion efficiency.

(2) The synthetic exhaust gas mixture must have the following composition:

Constituent	Volume percent	Parts per million
Carbon Monoxide [1]	1	
Oxygen	1.3	
Carbon Dioxide	9	
Water Vapor	10	
Sulfur Dioxide		20
Oxides of Nitrogen		280
Hydrogen		3500
Hydrocarbon [1,&thnsp≅2]		4000
Nitrogen=Balance		

[1] Alternatively, the carbon monoxide and hydrocarbon proportions of the mixture may be changed to 1.2% and 4650 ppm, respectively (using on of these alternative concentrations requires that the other be used simultaneously).

[2] Propylene/propane ratio=2/1.

[61 FR 52102, Oct. 4, 1996; 62 FR 20066, Apr. 24, 1997]

APPENDIX A TO SUBPART D OF PART 91—TABLES

TABLE 1—SYMBOLS USED IN SUBPARTS D AND E

Symbol	Term	Unit
A_{YM}	Final weighted emission test results	g/kW-hr
C_3H_8	Propane	
C_B	Concentration of emission in background sample	ppm
C_D	Concentration of emission in dilute sample	ppm
CO	Carbon monoxide	
CO_2	Carbon dioxide	
conc	Concentration (ppm by volume)	ppm
D_{XX}	Density of a specific emission (XX)	g/m^3
DXX	Volume concentration of a specific emission (XX) on a dry basis.	percent
DF	Dilution factor of dilute exhaust.	
D1	Water vapor mixture concentration	percent
f	Engine specific parameter considering atmospheric conditions	
G_{AIRD}	Intake air mass flow rate on dry basis	kg/h
G_{Fuel}	Fuel mass flow rate	kg/h
GP	Analyzer standard operating pressure	Pa
G_s	Mass of carbon measured during a sampling period	g
H	Absolute humidity (water content related to dry air)	gr/kg
H_2	Hydrogen	
i	Subscript denoting an individual mode	
IT	Indicated torque	N-m
K	Wet to dry conversion factor	
K_H	Humidity correction factor	
K_V	Calibration coefficient for critical flow venturi	
M_{XX}	Molecular weight of a specific molecule(XX)	g/mole
mass	Pollutant mass flow	g/h
M_{FUEL}	Mass of fuel consumed during a sampling period	g
N	Pump revolutions during test period	revs
N_2	Nitrogen	
NO	Nitric oxide	
NO_2	Nitrogen dioxide	
NO_X	Oxides of nitrogen	
O_2	Oxygen	
O_2 I	Oxygen concentration of the burner air	percent
P	Absolute pressure	kPa
P_{AUX}	Declared total power absorbed by auxiliaries fitted for the test	kW
P_B	Total barometric pressure (average of the pre-test and post-test values).	kPa
P_{dew}	Test ambient saturation vapor pressure at the dew point	kPa
P_e	Absolute pump outlet pressure	kPa
P_{ED}	Pressure drop between the inlet and throat of metering venturi	kPa
P_i	$P_i=P_{M,i} + P_{AUX,i}$	
P_M	Maximum power measured at the test speed under test conditions.	kW
P_P	Absolute pump inlet pressure	kPa
P_{PI}	Inlet pressure depression of venturi or pump	kPa

TABLE 1—SYMBOLS USED IN SUBPARTS D AND E—Continued

Symbol	Term	Unit
P_{PO}	Pressure head at CVS pump outlet	kPa
P_s	Dry atmospheric pressure	kPa
P_V	Absolute venturi inlet pressure	kPa
P_{wb}	Saturated vapor pressure	Pa
Q_C	Volumetric flow rate of dilute exhaust through CVS at STP	m^3/hr
Q_S	Gas flow rate	m^3/min
R_{STP}	Ideal gas constant at STP	m^3/mole
R_2	Fuel carbon weight fraction	g/g
STP	Standard temperature and pressure	
t	Elapsed time for test period	sec.
T	Absolute temperature at air inlet	°C
T_a	Ambient temperature	°C
T_{EI}	Air temperature in to metering venturi or flowmeter	°C
T_K	Absolute temperature	K
T_P	Absolute pump inlet temperature	°C
T_{PI}	Air temperature at CVS pump inlet	°C
T_{PO}	Air temperature at CVS pump outlet	°C
T_V	Absolute venturi inlet temperature	°C
V_O	Pump flow	m^3/rev
W	Average mass flow of emissions	g/hr
W_{XX}	Mass rate of specific emission (XX)	g/hr
WXX	Volume concentration in exhaust of specific emission (XX) on wet basis.	ppm, ppmC, %
WF	Weighing factor	
Z1	Water concentration	percent
α	Fuel specific factor representing the hydrogen to carbon ratio.	

TABLE 2—MEASUREMENT ACCURACY CALIBRATION FREQUENCY

No.	Item	Permissible deviation from reading [1]		Calibration frequency
		non-idle	idle	
1	Engine speed	±2%	±2%	Monthly.
2	Torque	±5%		Monthly.
3	Fuel consumption	±1%	±5%	Monthly.
4	Air consumption	±2%	±5%	As required.
5	Coolant temperature	±2 °C	Same	As required.
6	Lubricant temperature	±2 °C	Same	As required.
7	Exhaust back pressure	±5%	Same	As required.
8	Inlet depression	±5%	Same	As required.
9	Exhaust gas temperature	±15 °C	Same	As required.
10	Air inlet temperature (combustion air)	±2 °C	Same	As required.
11	Atmospheric pressure	±0.5%	Same	As required.
12	Humidity (combustion air) (relative)	±3.0%	Same	As required.
13	Fuel temperature	±2 °C	Same	As required.
14	Temperature with regard to dilution system.	±2 °C	Same	As required.
15	Dilution air humidity	±3% absolute	Same	As required.
16	HC analyzer	±2% [2]	Same	Monthly.
17	CO analyzer	±2% [2]	Same	Monthly.
18	NO_X analyzer	±2% [2]	Same	Monthly.
19	NO_X converter check	90%	Same	Monthly.
20	CO_2 analyzer	±2% [2]	Same	Monthly.

[1] All accuracy requirements pertain to the final recorded value which is inclusive of the data acquisition system.
[2] If reading is under 100 ppm then the accuracy shall be ±2 ppm.

TABLE 3—TEST FUEL SPECIFICATIONS

Item	Property	Tolerance	Procedure (ASTM) [1]
Sulfur, ppm max	1000		D 2622
Benzene, max. percent	1.5		D 3606
RVP, psi	8.6	±0.6	D 323
Octane, R+M/2	89.9	±3.1	D 2699 D 2700
IBP, °C	32.8	±11.0	D 86
10% point, °C	53.3	±5.5	D 86
50% point, °C	101.7	±8.3	D 86
90% point, °C	160.0	±11.1	D 86

TABLE 3—TEST FUEL SPECIFICATIONS—Continued

Item	Property	Tolerance	Procedure (ASTM) [1]
End Point, max. °C	212.8	.....	D 86
Phosphorus, g/l, max	0.02	.....	D 3231
Lead, g/l, max	0.02	.....	.....
Manganese, g/l, max	0.004	.....	.....
Aromatics, max. percent	35	.....	D 1319
Olefins, max. percent	10	.....	D 1319
Saturates, percent	remain	.....	D 1319

[1] All ASTM Procedures in this table have been incorporated by reference. See § 91.6.

APPENDIX B TO SUBPART D OF PART 91—FIGURES

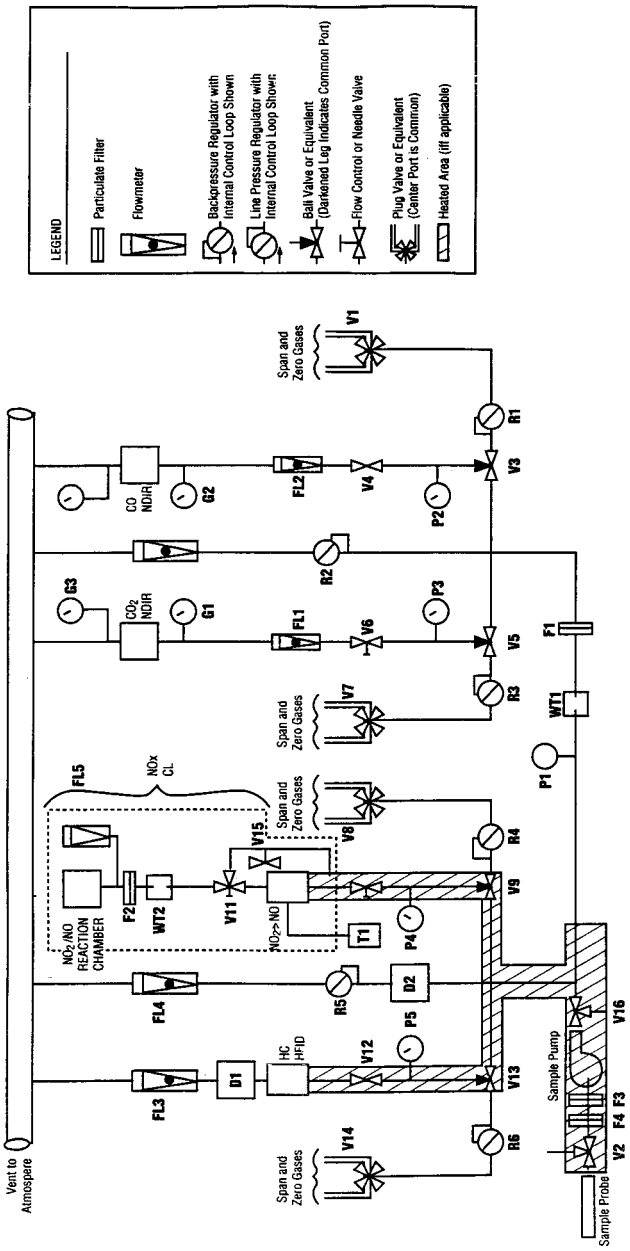

Figure 1. — Exhaust Gas Sampling and Analytical Train, Continuous Sampling

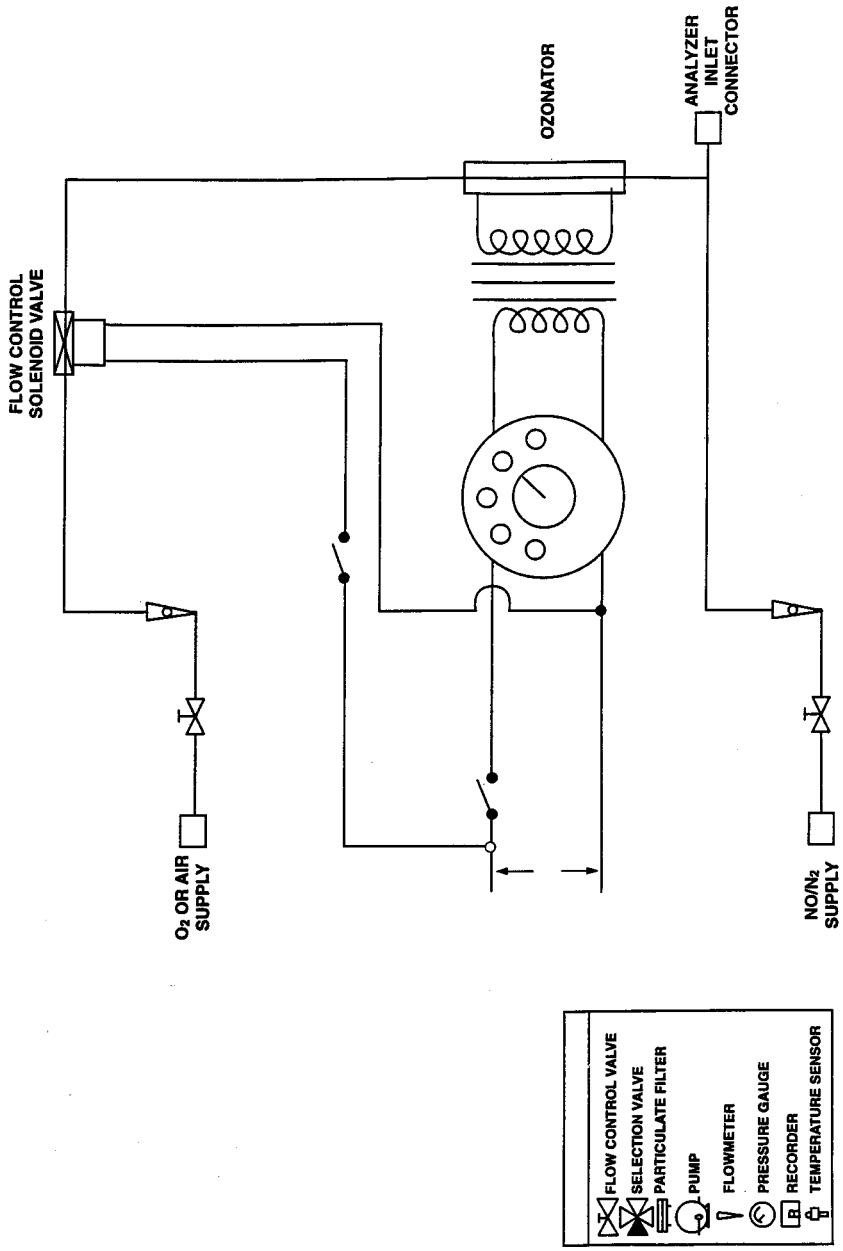

Figure 2. — NOx Converter Efficiency Detector

Subpart E—Gaseous Exhaust Test Procedures

§91.401 Scope; applicability.

(a) This subpart describes the procedures to follow in order to perform exhaust emission tests on new marine gasoline-fueled spark-ignition propulsion engines subject to the provisions of subpart A of this part 91. Provisions specific to raw gas sampling are in §§91.414 through 91.419, provisions specific to constant volume sampling are in §§91.420 through 91.426. All other sections in this subpart apply to both raw gas sampling and constant volume sampling unless indicated otherwise.

(b) Requirements for emission test equipment and calibrating this equipment are found in subpart D of this part.

§91.402 Definitions.

The definitions in §§91.3, 91.102, and 91.302 apply to this subpart.

§91.403 Symbols and abbreviations.

(a) The abbreviations in §91.5 apply to this subpart.

(b) The symbols in Table 1 in appendix A to subpart D apply to this subpart.

§91.404 Test procedure overview.

(a) The test consists of prescribed sequences of engine operating conditions to be conducted on an engine dynamometer or equivalent load and speed measurement device. The exhaust gases generated during engine operation are sampled either raw or dilute, and specific components are analyzed through the analytical system.

(b) The tests are designed to determine the brake-specific emissions of hydrocarbons, carbon monoxide, and oxides of nitrogen. The test consists of one idle mode and four power modes with an exponential relationship between torque and speed which span the typical operating range of spark-ignition marine propulsion engines. These procedures require the determination of the concentration of each pollutant, fuel flow, and the power output during each mode. The measured values are weighted and used to calculate the grams of each pollutant emitted per brake kilowatt hour (g/kW-hr).

(c)(1) When an engine is tested for exhaust emissions the complete engine is tested, with all emission control devices installed and functioning.

(2) Additional accessories (for example, oil cooler, alternators, and so forth) may be installed, but such accessory loading will be considered parasitic in nature and observed power is used in the emission calculation.

(d) All emission control systems installed on or incorporated in the application must be functioning during all procedures in this subpart. In cases of component malfunction or failure, no maintenance is allowed without prior approval from the Administrator in accordance with §91.118.

§91.405 Recorded information.

(a) Record the information described in this section for each test where applicable.

(b) *Test data; general.* (1) Engine identification number.

(2) Engine emissions control system.

(3) Test operator(s).

(4) Number of hours of operation accumulated on the engine prior to beginning the warm-up portion of the test (to the nearest tenth hour).

(5) Fuel identification.

(6) For two-stroke engines, fuel/oil mixture ratio.

(7) Date of most recent analytical assembly calibration.

(8) All pertinent instrument information such as tuning, gain, serial numbers, detector number, and calibration curve numbers. As long as this information is traceable, it may be summarized by system number or analyzer identification numbers.

(c) *Test data; pre-test.* (1) Date and time of day.

(2) Test number.

(3) Barometric pressure; as an option, barometric pressure can be measured as a modal measurement instead of or in addition to a pre- and post-test measurement.

(4) Recorder chart or equivalent. Identify for each test segment zero traces for each range used, and span traces for each range used.

(d) *Test data; modal.* (1) Recorder chart or equivalent. Identify for each

test mode the emission concentration traces and the associated analyzer range(s).

(2) Observed engine torque.

(3) Observed engine rpm.

(4) Engine intake air flow, if applicable.

(5) Test cell temperature and humidity for each mode.

(6) For raw gas testing; fuel flow for each mode. Fuel flow measurement is not required for dilute testing but is allowed. If the fuel flow measurement is a volume measurement system, record the fuel temperature in the measurement system for fuel density corrections to the mass flow rate. If the fuel temperature is within 3 °C of the calibration temperature, no density correction is required.

(7) Engine intake temperature and humidity for each mode, if applicable.

(8) Exhaust sample line temperature, if applicable.

(e) *Test data; post-test.* (1) Recorder chart or equivalent. Identify the hang-up check.

(2) Recorder chart or equivalent. Identify the zero traces for each range used and the span traces for each range used.

(3) Total number of hours of operation accumulated on the engine (to the nearest tenth hour).

(4) Barometric pressure, post-test segment.

§ 91.406 Engine parameters to be measured and recorded.

Measure or calculate, then record, the engine parameters in Table 1 in appendix A of this subpart.

§ 91.407 Engine inlet and exhaust systems.

(a) The marine engine manufacturer is liable for emission compliance over the full range of restrictions that are specified by the manufacturer for that particular engine.

(b) The air inlet filter system and exhaust muffler system combination used on the test engine must be the systems expected to yield the highest emission levels.

§ 91.408 Pre-test procedures.

(a) *Engine service accumulation and stabilization procedure.* Use the service accumulation procedure determined by the manufacturer for exhaust emission stabilizing of an engine, consistent with good engineering practice (see § 91.117).

(1) The manufacturer determines, for each engine family, the number of hours at which the engine exhaust emission control system combination is stabilized for emission testing. However, this stabilization procedure may not exceed 12 hours. The manufacturer must maintain, and provide to the Administrator upon request, a record of the rationale used in making this determination. If the manufacturer can document that, at some time prior to the full 12 hour service accumulation period, the engine emissions are decreasing for the remainder of the 12 hours, the service accumulation may be completed at that time. The manufacturer may elect to accumulate 12 hours on each test engine within an engine family without making this determination.

(2) During service accumulation, the fuel and lubricants specified in § 91.308 must be used.

(3) Engine maintenance during service accumulation is allowed only in accordance with § 91.117.

(b) *Engine pre-test preparation.* (1) Drain and charge the fuel tank(s) with the specified test fuel (see § 91.308) to 50 percent of the tank's nominal capacity. If an external fuel tank is used, the engine fuel inlet system pressure must be typical of what the engine will see in use.

(2) Operate the engine on the dynamometer measuring the fuel consumption (fuel consumption required only for raw gas sampling method) and torque before and after the emission sampling equipment is installed, including the sample probe, using mode 1 from Table 2 in appendix A of this subpart. The emission sampling equipment may not significantly affect the operational characteristics of the engine (typically, the results should agree within five percent).

(c) *Analyzer pre-test procedures.* (1) If necessary, warm up and stabilize the analyzer(s) before calibrations are performed.

(2) Replace or clean the filter elements and then vacuum leak check the

system per §91.324(a). If necessary, allow the heated sample line, filters, and pumps to reach operating temperature.

(3) Perform the following system checks:

(i) If necessary, check the sample-line temperature. Heated FID sample line temperature must be maintained between 110 °C and 230 °C, a heated NO_X sample line temperature must be maintained between 60 °C and 230 °C.

(ii) Check that the system response time has been accounted for prior to sample collection data recording.

(iii) A hang-up check is permitted.

(4) Check analyzer zero and span before and after each test at a minimum. Further, check analyzer zero and span any time a range change is made or at the maximum demonstrated time span for stability for each analyzer used.

(d) Check system flow rates and pressures and reset if necessary.

§91.409 Engine dynamometer test run.

(a) Engine and dynamometer start-up.

(1) Only adjustments in accordance with §91.118 may be made to the test engine prior to starting a test.

(2) If necessary, warm up the dynamometer as recommended by the dynamometer manufacturer ore good engineering practice.

(3) At the manufacturer's option, the engine can be run with the throttle in a fixed position or by using the engine's governor (if the engine is manufactured with a governor). In either case, the engine speed and load must meet the requirements specified in paragraph (b)(12) of this section.

(b) Each test consists of the following:

(1) Record the general test data as specified in §91.405.

(2) Precondition the engine in the following manner;

(i) Operate the engine at idle for 2 to 3 minutes;

(ii) Operate the engine at a power greater than or equal to 50 percent power at the rated speed for 5 to 7 minutes;

(iii) Operate the engine at rated speed and maximum power for 25 to 30 minutes;

(iv) Option. For four-stroke engines, where appropriate, it is permitted to precondition the engine at rated speed and maximum power until the oil and water temperatures are stabilized. The temperatures are defined as stabilized if they are maintained within 2 percent of point for 2 minutes. The engine must be operated a minimum of 10 minutes for this option. This optional procedure may be substituted for step in paragraphs (b)(2)(iii) of this section;

(v) Option. If the engine has been operating on service accumulation for a minimum of 40 minutes, the service accumulation may be substituted for steps in paragraphs (b)(2) (i) through (iii) of this section.

(3) Record all pre-test data specified in §91.405(c).

(4) Start the test cycle (see §91.410) within 10 minutes of the completion of the steps required by paragraph (b)(2) of this section.

(5) During the first mode calculate the torque corresponding to 71.6, 46.5, and 25.3 percent of the maximum observed torque for the rated speed (see Table 2 in appendix A of this subpart).

(6) Once engine speed and load are set for a mode, run the engine for a sufficient period of time to achieve thermal stability. At the manufacturers option, determine and document the appropriate criterion for thermal stability for each engine family.

(7) Record all modal data specified in §91.405(e) for a minimum time period of the last two minutes of each mode. Longer averaging periods are acceptable, but the data averaged must be from a continuous time period. The duration of time during which this data is recorded is referred to as the ''sampling period.'' The data collected during the sampling period is used for modal emission calculations.

(8) Continuously record the analyzer's response to the exhaust gas during the sampling period.

(9) Modes may be repeated.

(10) If a delay of more than one hour occurs between the end of one mode and the beginning of another mode, the test is void and must be restarted as described at paragraph (b)(1) of this section.

(11) The engine speed and load must be maintained within the requirements

of § 91.410 during the sampling period for each mode. If this requirement is not met, the mode is void and must be restarted.

(12) If at any time during a mode, the test equipment malfunctions or the specifications in § 91.410 can not be met, the test is void, and must be aborted. Corrective action should be taken and the test restarted.

(13) Fuel flow and air flow during the idle condition may be determined just prior to or immediately following the dynamometer sequence, if longer times are required for accurate measurements. If the dilute sampling method (Constant Volume Sampling) is used, neither fuel flow nor air flow measurements are required.

(c) Exhaust gas measurements. (1) Measure HC, CO, CO_2, and NO_X concentration in the exhaust sample.

(2) Each analyzer range that may be used during a test segment must have the zero and span responses recorded prior to the start of the test. Only the range(s) used to measure the emissions during the test is required to have its zero and span recorded after the completion of the test. Depending on the stability of each individual analyzer, more frequent zero checks or spans between modes may be necessary.

(3) It is permitted to change filter elements between test segments.

(4) A leak check is permitted between modes.

(5) A hang-up check is permitted between modes (see § 91.413).

(6) If, during the emission measurement portion of a mode, the value of the gauges downstream of the NDIR analyzer(s) G3 or G4 (See Figure 1 in appendix B of subpart D of this part) differs by more than ±0.5 kPa, the mode is void.

§ 91.410 Engine test cycle.

(a) The 5-mode cycle specified in Table 2 in appendix A to this subpart shall be followed in dynamometer operation tests of marine engines.

(b) During each non-idle mode the specified speed and load shall be held to within ±50 rpm or ± 2 percent of point, whichever is greater. During each idle mode the engine speed shall be held within ±75 rpm or ± 5 percent of the manufacturers specified idle speed, whichever is greater. For direct drive products (no neutral gear), it is acceptable to have an accessory load on the engine during the idle mode provided that the engine speed is within ± 5 percent of the manufacturers specified idle speed and the accessory load is representative of in use operation.

(c) If the operating conditions specified in paragraph (b) of this section for modes 2, 3, 4, and 5 cannot be maintained, the Administrator may authorize deviations from the specified load conditions. Such deviations shall not exceed 10 percent of the maximum torque at the test speed. The minimum deviations, above and below the specified load, necessary for stable operation shall be determined by the manufacturer and approved by the Administrator prior to the test run.

(d) Do not include power generated during the idle mode (mode 5) in the calculation of emissions results.

§ 91.411 Post-test analyzer procedures.

(a) Perform a hang-up check within 60 seconds of the completion of the last mode in the test. Use the following procedure:

(1) Introduce a zero-grade gas or room air into the sample probe or valve V2 (see Figure 1 in appendix B of subpart D of this part) to check the ''hangup zero'' response. Simultaneously start a time measurement.

(2) Select the lowest HC range used during the test.

(3) Within four minutes of beginning the time measurement in paragraph (a)(1) of this section, the difference between the zero gas response and the hang-up zero response shall not be greater than 5.0 percent of full scale or 10 ppmC whichever is greater.

(b) Begin the analyzer span checks within six minutes after the completion of the last mode in the test. Record for each analyzer the zero and span response for each range used during the preceding test or test segment.

(c) If during the test, the filter element(s) were replaced or cleaned, a vacuum check must be performed per § 91.324(a) immediately after the span checks. If the vacuum side leak check does not meet the requirements of § 91.324(a) the test is void.

(d) Read and record the post-test data specified in §91.405(e).

(e) For a valid test, the analyzer drift between the before-segment and after-segment span checks for each analyzer must meet the following requirements:

(1) The span drift (defined as the change in the difference between the zero response and the span response) must not exceed two percent of full-scale chart deflection for each range used.

(2) The zero response drift must not exceed two percent of full-scale chart deflection for each range used above 155 ppm (or ppm C), or three percent of full-scale chart deflection for each range below 155 ppm (or ppm C).

§91.412 Data logging.

(a) A computer or any other automatic data collection (ADC) device(s) may be used as long as the system meets the requirements of this subpart.

(b) Determine from the data collection records the analyzer responses corresponding to the end of each mode.

(c) Record data at a minimum of one Hz (one time per second).

(d) Determine the final value for power by averaging the individually calculated power points for each value of speed and torque recorded during the sampling period. As an alternative, the final value for power can be calculated from the average values for speed and torque, collected during the sampling period.

(e) Determine the final value for CO_2, CO, HC, and NO_X concentrations by averaging the concentration of each point taken during the sample period for each mode.

§91.413 Exhaust sample procedure—gaseous components.

(a) Automatic data collection equipment requirements. The analyzer response may be read by automatic data collection (ADC) equipment such as computers, data loggers, etc. If ADC equipment is used the following is required:

(1) For dilute grab (''bag'') analysis, the analyzer response must be stable at greater than 99 percent of the final reading for the dilute exhaust sample bag. A single value representing the average chart deflection over a 10-second stabilized period shall be stored.

(2) For continuous analysis systems, a single value representing the average integrated concentration over a cycle shall be stored. Alternatively, the ADC may store the individual instantaneous values collected during the measurement period.

(3) The chart deflections or average integrated concentrations required in paragraphs (a)(1) and (a)(2) of this section may be stored on long-term computer storage devices such as computer tapes, storage discs, punch cards, and so forth, or they may be printed in a listing for storage. In either case a chart recorder is not required and records from a chart recorder, if they exist, need not be stored.

(4) If ADC equipment is used to interpret analyzer values, the ADC equipment is subject to the calibration specifications of the analyzer as if the ADC equipment is part of analyzer system.

(b) Data records from any one or a combination of analyzers may be stored as chart recorder records.

(c) Grab sample analysis. For dilute grab sample analysis perform the following sequence:

(1) Calibrate analyzers using the procedure described in §91.326.

(2) Record the most recent zero and span response as the pre-analysis value.

(3) Measure HC, CO, CO_2, and NO_X background concentrations in the sample bag(s) and background sample bag(s) using the same flow rates and pressures.

(4) Good engineering practice dictates that analyzers used for continuous analysis should be operated such that the measured concentration falls between 15 percent and 100 percent of full scale.

(5) A post-analysis zero and span check of each range must be performed and the values recorded. The number of events that may occur between the pre and post checks is not specified. However, the difference between pre-analysis zero and span values (recorded in paragraph (c)(5) or (c)(6) of this section) versus those recorded for the post-analysis check may not exceed the zero drift limit or the span drift limit

of 2 percent of full scale chart deflection for any range used. Otherwise the test is void.

(d) Continuous sample analysis. For continuous sample analysis, perform the following sequence:

(1) Calibrate analyzers using the procedures described in § 91.326.

(2) Leak check portions of the sampling system that operate at negative gauge pressures when sampling, and allow heated sample lines, filters, pumps, and so forth to stabilize at operating temperature.

(3) Option: Determine the hang-up for the FID or HFID sampling system:

(i) Zero the analyzer using zero air introduced at the analyzer port.

(ii) Flow zero air through the overflow sampling system. Check the analyzer response.

(iii) If the overflow zero response exceeds the analyzer zero response by two percent or more of the FID or HFID full-scale deflection, hang-up is indicated and corrective action must be taken (see paragraph (e) of this section).

(iv) The complete system hang-up check specified in paragraph (f) of this section is recommended as a periodic check.

(4) Obtain a stable zero reading.

(5) Good engineering practice dictates that analyzers used for continuous analysis should be operated such that the measured concentration falls between 15 percent and 100 percent of full scale.

(6) Record the most recent zero and span response as the pre-analysis values.

(7) Collect background HC, CO, CO_2, and NO_X in a sample bag (for dilute exhaust sampling only, see § 91.422).

(8) Perform a post-analysis zero and span check for each range used at the conditions specified in paragraph (d)(1) of this section. Record these responses as the post-analysis values.

(9) Neither the zero drift nor the span drift between the pre-analysis and post-analysis checks on any range used may exceed three percent for HC, or two percent for NO_X, CO, and CO_2, of full scale chart deflection, or the test is void. (If the HC drift is greater than three percent of full-scale chart deflection, hydrocarbon hang-up is likely.)

(10) Determine background levels of NO_X, CO, or CO_2 (for dilute exhaust sampling only) by the grab (''bag'') technique outlined in paragraph (c) of this section.

(e) Hydrocarbon hang-up. If HC hang-up is indicated, the following sequence may be performed:

(1) Fill a clean sample bag with background air.

(2) Zero and span the HFID at the analyzer ports.

(3) Analyze the background air sample bag through the analyzer ports.

(4) Analyze the background air through the entire sample probe system.

(5) If the difference between the readings obtained is two ppm or more, clean the sample probe and the sample line.

(6) Reassemble the sample system, heat to specified temperature, and repeat the procedure in paragraphs (e)(1) through (e)(5) of this section.

§ 91.414 Raw gaseous exhaust sampling and analytical system description.

(a) Schematic drawing. An example of a sampling and analytical system which may be used for testing under this subpart is shown in Figure 4 in appendix B of this subpart. All components or parts of components that are wetted by the sample or corrosive calibration gases shall be either chemically cleaned stainless steel or inert material (e.g., polytetrafluoroethylene resin). The use of ''gauge savers'' or ''protectors'' with nonreactive diaphragms to reduce dead volumes is permitted.

(b) Sample probe. (1) The sample probe shall be a straight, closed end, stainless steel, multi-hole probe. The inside diameter shall not be greater than the inside diameter of the sample line + 0.03 cm. The wall thickness of the probe shall not be greater than 0.10 cm. The fitting that attaches the probe to the exhaust pipe shall be as small as practical in order to minimize heat loss from the probe.

(2) The probe shall have a minimum of three holes. The spacing of the radial planes for each hole in the probe must be such that they cover approximately equal cross-sectional areas of

the exhaust duct. The angular spacing of the holes must be approximately equal. The angular spacing of any two holes in one plane may not be 180° ± 20° (i.e., section C-C of Figure 1 in appendix B of this subpart). The holes should be sized such that each has approximately the same flow. If only three holes are used, they may not all be in the same radial plane.

(3) The exhaust gas probe must be located in a position which yields a well mixed, homogeneous sample of the engine exhaust. The probe must extend radially through the exhaust duct prior to where the exhaust mixes with the cooling water. The cooling water flow may be rerouted if necessary to obtain an emission sample provided that the modification has no significant effect on the performance or emissions characteristics of the engine. The probe must pass through the approximate center and must extend across at least 80 percent of the diameter of the duct. The exact position of the probe may vary from engine family to engine family.

(c) Sample transfer line. (1) The maximum inside diameter of the sample line shall not exceed 1.32 cm.

(2) If valve V2 in Figure 1 of appendix B of Subpart D of this part is used, the sample probe must connect directly to valve V2 in Figure 1 of appendix B of subpart D of this part. The location of optional valve V2 may not be greater than 1.22 m from the exhaust duct.

(3) The location of optional valve V16 in Figure 1 of appendix B of subpart D of this part may not be greater than 61 cm from the sample pump. The leakage rate for this section on the pressure side of the sample pump may not exceed the leakage rate specification for the vacuum side of the pump.

(d) Venting. All vents including analyzer vents, bypass flow, and pressure relief vents of regulators should be vented in such a manner to avoid endangering personnel in the immediate area.

(e) Any variation from the specifications in this subpart including performance specifications and emission detection methods may be used only with prior approval by the Administrator.

(f) Additional components, such as instruments, valves, solenoids, pumps, switches, and so forth, may be employed to provide additional information and coordinate the functions of the component systems.

(g) The following requirements must be incorporated in each system used for raw testing under this subpart.

(1) Take the sample for all components with one sample probe and split it internally to the different analyzers.

(2) Heat the sample transport system from the engine exhaust pipe to the HC analyzer for the raw gas sampling method as indicated in Figure 1 in appendix B of subpart D of this part. The NO_X analyzer for the raw gas sampling method may be heated as indicated in Figure 1 in appendix B of subpart D of this part. The HC analyzer and the NO_X analyzer for the dilute sampling method may be heated as indicated in Figure 1 in appendix B of subpart D of this part.

§91.415 Raw gaseous sampling procedures.

Fit all heated sampling lines with a heated filter to extract solid particles from the flow of gas required for analysis. The sample line for HC measurement must be heated. The sample line for CO, CO_2, and NO_X may be heated or unheated.

§91.416 Intake air flow measurement specifications.

(a) If used, the engine intake air flow measurement method used must have a range large enough to accurately measure the air flow over the engine operating range during the test. Overall measurement accuracy must be ± 2 percent of full-scale value of the measurement device for all modes except the idle mode. For the idle mode, the measurement accuracy shall be ± 5 percent or less of the full-scale value. The Administrator must be advised of the method used prior to testing.

(b) When an engine system incorporates devices that affect the air flow measurement (such as air bleeds, air injection, pulsed air, and so forth) that result in understated exhaust emission results, make corrections to the exhaust emission results to account for such effects.

§ 91.417 Fuel flow measurement specifications.

(a) Fuel flow measurement is required only for raw testing but is allowed for dilute testing.

(b) The fuel flow rate measurement instrument must have a minimum accuracy of ± 2 percent of full-scale flow rate for each measurement range used.

§ 91.418 Data evaluation for gaseous emissions.

For the evaluation of the gaseous emissions recording, record the last two minutes of each mode and determine the average values for HC, CO, CO_2, and NO_X during each mode from the average concentration readings determined from the corresponding calibration data.

§ 91.419 Raw emission sampling calculations.

(a) Derive the final test results through the steps described in this section.

(b) Air and fuel flow method. If both air and fuel flow mass rates are measured, the following equations are used to determine the weighted emission values for the test engine:

$$W_{NO_X} = \left(G_{AIRD} + G_{FUEL}\right) \times \frac{M_{NO_2}}{M_{exh}} \times WNO_X \times K_H \times \frac{1}{10^6}$$

$$W_{HC} = \left(G_{AIRD} + G_{FUEL}\right) \times \frac{M_{HC_{exh}}}{M_{exh}} \times WHC \times \frac{1}{10^6}$$

$$W_{CO} = \left(G_{AIRD} + G_{FUEL}\right) \times \frac{M_{CO}}{M_{exh}} \times WCO \times \frac{1}{10^2}$$

Where:

W_{HC} = Mass rate of HC in exhaust [g/hr],

G_{AIRD} = Intake air mass flow rate on dry basis [g/hr],

G_{FUEL} = Fuel mass flow rate [g/hr],

M_{HCexh} = Molecular weight of hydrocarbons in the exhaust; see the following equation:

$$M_{HC_{exh}} + 12.01 + 1.008 \times \alpha$$

Where:

α=Hydrocarbon/carbon atomic ratio of the fuel.

M_{exh}=Molecular weight of the total exhaust; see the following equation:

$$M_{exh} = \frac{M_{HC_{exh}} \times WHC}{10^6} + \frac{28.01 \times WCO}{10^2} + \frac{44.1 \times WCO_2}{10^2} + \frac{46.01 + WNO_X}{10^6} + \frac{2.016 \times WH_2}{10^2} + 18.01 \times (1 - K) + 28.01 \times \frac{\left[100 - \frac{WHC}{10^4} - WCO - WCO_2 \frac{WNO_X}{10^4} - WH_2 - 100 \times (1 - K)\right]}{10^2}$$

Where:

WHC = HC volume concentration in exhaust, ppmC wet

WCO = CO percent concentration in the exhaust, wet

DCO = CO percent concentration in the exhaust, dry

WCO_2 = CO_2 percent concentration in the exhaust, wet

DCO_2 = CO_2 percent concentration in the exhaust, dry
WNO_X = NO volume concentration in exhaust, ppm wet
WH_2 = H_2 percent concentration in exhaust, wet
K = correction factor to be used when converting dry measurements to a wet basis. Therefore, wet concentration = dry concentration × K, where K is:

$$\frac{1}{1+0.005\times\left(DCO+DCO_2\right)\times\alpha-0.01\times DH_2}$$

DH_2 = H_2 percent concentration in exhaust, dry, calculated from the following equation:

$$DH_2=\frac{0.5\times\alpha\times DCO\times\left(DCO+DCO_2\right)}{DCO+\left(3\times DCO_2\right)}$$

W_{CO} = Mass rate of CO in exhaust, [g/hr]
M_{CO} = Molecular weight of CO = 28.01
W_{NOx} = Mass rate of NO_X in exhaust, [g/hr]
M_{NO2} = Molecular weight of NO_2 = 46.01
K_H = Factor for correcting the effects of humidity on NO_2 formation for four-stroke gasoline engines; see the equation below:

$$K_H=\frac{1}{1-0.0329\times\left(H-10.71\right)}$$

Where:
H = specific humidity of the intake air in grams of moisture per kilogram of dry air.

For two-stroke gasoline engines, KH should be set to 1.

(c) Fuel flow method. The following equations are to be used when fuel flow is selected as the basis for mass emission calculations using the raw gas method.

$$W_{HC}=\frac{G_{FUEL}}{TC}\times\frac{WHC}{10^4}$$

$$W_{CO}=\frac{M_{CO}}{M_F}\times\frac{G_{FUEL}}{TC}\times WCO$$

$$W_{NO_X}=\frac{M_{NOX}}{M_F}\times\frac{G_{FUEL}}{TC}\times\frac{WNO_X}{10^4}\times K_H$$

Where:
W_{HC} = Mass rate of HC in exhaust, [g/hr]
M_F = Molecular weight of test fuel; see following equation:

$$M_F=12.01+1.008\times\alpha$$

G_{FUEL} = Fuel mass flow rate, [g/hr]
TC = Total carbon; see following equation:

$$TC=WCO+WCO_2+\frac{WHC}{10^4}$$

WHC = HC volume concentration in exhaust, ppmC wet
WCO = CO percent concentration in the exhaust, wet
DCO = CO percent concentration in the exhaust, dry
WCO_2 = CO_2 percent concentration in the exhaust, wet
DCO_2 = CO_2 percent concentration in the exhaust, dry
WNO_X = NO volume concentration in exhaust, ppm wet
WH2 = H_2 percent concentration in exhaust, wet
K = correction factor to be used when converting dry measurements to a wet basis. Therefore, wet concentration = dry concentration × K, where K is:

$$K = \frac{1}{1 + 0.005 \times (DCO + DCO_2) \times \alpha - 0.01 \times DH_2}$$

DH_2 = H_2 percent concentration in exhaust, dry, calculated from the following equation:

$$DH_2 = \frac{0.5 \times \alpha \times DCO \times (DCO + DCO_2)}{DCO + (3 \times DCO_2)}$$

W_{CO} = Mass rate of CO in exhaust, [g/hr]
M_{CO} = Molecular weight of CO = 28.01
W_{NOx} = Mass rate of NO_X in exhaust, [g/hr]
M_{NO2} = Molecular weight of NO_2 = 46.01
K_H = Factor for correcting the effects of humidity on NO_2 formation for four-stroke gasoline engines; see the equation below:

$$K_H = \frac{1}{1 - 0.0329 \times (H - 10.71)}$$

Where:
H = specific humidity of the intake air in grams of moisture per kilogram of dry air.
For two-stroke gasoline engines, KH should be set to 1.

(d) The final reported emission test results must be computed by using the following formula for each individual gas component:

$$Y_{wm} = \frac{\Sigma(W_i \times f_i)}{\Sigma(P_i \times f_i)}$$

Where:
Y_{wm} = Weighted mass emission level (HC, CO, NO_X) for a test [g/kW-hr].
W_i = Average mass flow rate (W_{HC}, W_{CO}, W_{NOx}) of an emission from the test engine during mode i, [g/hr].
f_i = Weighting factors for each mode according to § 91.410(a)
P_i = Average power measured during mode i, [kW], calculated according to the formula given in § 91.423(b). Power for the idle mode shall always be zero for this calculation.

(e) The final reported weighted brake-specific fuel consumption (WBSFC) shall be computed by use of the following formula:

$$WBSFC = \frac{\Sigma(F_i \times f_i)}{\Sigma(P_i \times f_i)}$$

Where:
WBSFC = Weighted brake-specific fuel consumption in grams of fuel per kilowatt-hour (g/kW-hr).
F_i = Fuel mass flow rate of the engine during mode i, [g/hr].
f_i = Weighting factors for each mode according to § 91.410(a)
P_i = Average power measured during mode i, [kW], calculated according to the formula given in § 91.423(b). Power for the idle mode shall always be zero for this calculation.

§ 91.420 CVS concept of exhaust gas sampling system.

(a) A dilute exhaust sampling system is designed to directly measure the true mass of emissions in engine exhaust without the necessity of measuring either fuel flow or intake air flow. This is accomplished by diluting the exhaust produced by an engine under test with ambient background air and measuring the total diluted exhaust flow rate and the concentration of emissions within the dilute flow. Total mass flow of an emission is then easily calculated.

(b) A constant volume sampler (CVS) is typically used to control the total amount of dilute flow through the system. As the name implies, a CVS restricts flow to a known value dependent only on the dilute exhaust temperature and pressure.

(c) For the testing described in this subpart, a CVS must consist of: A mixing tunnel into which the engine exhaust and dilutant (background) air are dumped; a dilute exhaust flow metering system; a dilute exhaust sample port; a background sample port; a dilute exhaust sampling system; and a background sampling system.

(1) *Mixing tunnel.* The mixing tunnel must be constructed such that complete mixing of the engine exhaust and background air is assured prior to the sampling probe.

(2) *Exhaust flow metering system.* A dilute exhaust flow metering system must be used to control the total flow rate of the dilute engine exhaust as described in § 91.421.

(3) *Exhaust sample port.* A dilute exhaust sample port must be located in or downstream of the mixing tunnel at a point where complete mixing of the

engine exhaust and background air is assured.

(4) *Background sample port.* A dilute background sample port must be located in the stream of background air before it is mixed with the engine exhaust. The background probe must draw a representative sample of the background air during each sampling mode.

(5) *Exhaust sampling system.* The dilute exhaust sampling system controls the flow of samples from the mixing tunnel to the analyzer system. This could be either a continuous sampling system or grab (bag) sampling system. If a critical flow venturi (CFV) is used on the dilute exhaust sample probe, this system must assure that the sample CFV is in choke flow during testing. If no CFV is used, this system must assure a constant volumetric flow rate through the dilute exhaust sample probe or must incorporate electronic flow compensation.

(6) *Background sampling system.* The background sampling system controls the flow of samples from the background air supply to the analyzer system. This could be either a continuous sampling system or grab (bag) sampling system. This system must assure a constant volumetric flow rate through the background sample probe.

§91.421 Dilute gaseous exhaust sampling and analytical system description.

(a) General. The exhaust gas sampling system described in this section is designed to measure the true mass emissions of engine exhaust. This system utilizes the Constant volume Sampling (CVS) concept (described in §91.420) of measuring mass emissions of HC, NO_X, CO, and CO_2. Grab sampling for individual modes is an acceptable method of dilute testing for all constituents, HC, NO_X, CO, and CO_2. Continuous dilute sampling is not required for any of the exhaust constituents, but is allowable for all. Heated sampling is not required for any of the constituents, but is allowable for HC and NO_X. The mass of gaseous emissions is determined from the sample concentration and total flow over the test period. As an option, the measurement of total fuel mass consumed over a cycle may be substituted for the exhaust measurement of CO_2. General requirements are as follows:

(1) This sampling system requires the use of a Positive Displacement Pump—Constant Volume Sampler (PDP–CVS) system with a heat exchanger, or a Critical Flow Venturi—Constant Volume Sampler (CFV–CVS) system with CVS sample probes and/or a heat exchanger or electronic flow compensation. Figure 2 in appendix B of this subpart is a schematic drawing of the PDP–CVS system. Figure 3 in appendix B of this subpart is a schematic drawing of the CFV–CVS system.

(2) The HC analytical system requires:

(i) Grab sampling (see §91.420, and Figure 2 or Figure 3 in appendix B of this subpart) and analytical capabilities (see §91.423, and Figure 4 in appendix B of this subpart), or

(ii) Continuously integrated measurement of diluted HC meeting the minimum requirements and technical specifications contained in paragraph (b)(2) of this section.

(iii) The dilute HC analytical system for marine spark-ignition engines does not require a heated flame ionization detector (HFID).

(iv) If used, the HFID sample must be taken directly from the diluted exhaust stream through a heated probe and integrated continuously over the test cycle.

(v) The heated probe must be located in the sampling system far enough downstream of the mixing area to ensure a uniform sample distribution across the CVS duct at the sampling zone.

(3) The CO and CO_2 analytical system requires:

(i) Grab sampling (see §91.420, and Figure 2 or Figure 3 in appendix B of this subpart) and analytical capabilities (see §91.423, and Figure 4 in appendix B of this subpart), or

(ii) Continuously integrated measurement of diluted CO and CO_2 meeting the minimum requirements and technical specifications contained in paragraph (b)(4) of this section.

(4) The NO_X analytical system requires:

(i) Grab sampling (see §91.420, and Figure 2 or Figure 3 in appendix B of

this subpart) and analytical capabilities (see § 91.423, and Figure 4 in appendix B of this subpart), or

(ii) A continuously integrated measurement of diluted NO_X meeting the minimum requirements and technical specifications contained in paragraph (b)(4) of this section.

(5) Since various configurations can produce equivalent results, exact conformance with these drawings is not required. Additional components such as instruments, valves, solenoids, pumps, and switches may be used to provide additional information and coordinate the functions of the component systems. Other components, such as snubbers, which are not needed to maintain accuracy on some systems, may be excluded if their exclusion is based upon good engineering judgment.

(6) Other sampling and/or analytical systems may be used if shown to yield equivalent results and if approved in advance by the Administrator.

(b) Component description. The components necessary for exhaust sampling must meet the following requirements:

(1) *Exhaust dilution system.* The PDP–CVS must conform to all of the requirements listed for the exhaust gas PDP–CVS in § 91.420 of this chapter. The CFV–CVS must conform to all of the requirements listed for the exhaust gas CFV–CVS in § 91.420. In addition, the CVS must conform to the following requirements:

(i) The flow capacity of the CVS must be sufficient to maintain the diluted exhaust stream in the dilution system at a temperature of 190 °C or less at the sampling zone for hydrocarbon measurement and as required to prevent condensation at any point in the dilution system. Gaseous emission samples may be taken directly from this sampling point.

(ii) For the CFV–CVS, either a heat exchanger or electronic flow compensation is required (see Figure 3 in appendix B of this subpart).

(iii) For the CFV–CVS when a heat exchanger is used, the gas mixture temperature, measured at a point immediately ahead of the critical flow venturi, must be within ±11 °C of the average operating temperature observed during the test with the simultaneous requirement that condensation does not occur. The temperature measuring system (sensors and readout) must have an accuracy and precision of ±2 °C. For systems utilizing a flow compensator to maintain proportional flow, the requirement for maintaining constant temperature is not necessary.

(2) *Continuous HC measurement system.* (i) The continuous HC sample system (as shown in Figure 2 or 3 in appendix B of this subpart) uses an ''overflow'' zero and span system. In this type of system, excess zero or span gas spills out of the probe when zero and span checks of the analyzer are made.

(ii) No other analyzers may draw a sample from the continuous HC sample probe, line, or system, unless a common sample pump is used for all analyzers and the sample line system design reflects good engineering practice.

(iii) The overflow gas flow rates into the sample line must be at least 105 percent of the sample system flow rate.

(iv) The overflow gases must enter the sample line as close as practical to the outside surface of the CVS duct or dilution system.

(v) The continuous HC sampling system consists of a probe (which for a HFID analyzer must raise the sample to the specified temperature) and, where used, a sample transfer system (which for a HFID must maintain the specified temperature). The HFID continuous hydrocarbon sampling system (exclusive of the probe) must:

(A) Maintain a wall temperature of 190 ± 11 °C as measured at every separately controlled heated component (that is, filters, heated line sections), using permanent thermocouples located at each of the separate components.

(B) Have a wall temperature of 190 ± 11 °C over its entire length. The temperature of the system is demonstrated by profiling the thermal characteristics of the system where possible at initial installation and after any major maintenance performed on the system. The profiling is to be accomplished using the insertion thermocouple probing technique. The system temperature must be monitored continuously during testing at the locations and temperature described in § 91.421(b)(2).

(C) Maintain a gas temperature of 190 ± 11 °C immediately before the heated filter and HFID. Determine these gas temperatures by a temperature sensor located immediately upstream of each component.

(vi) The continuous hydrocarbon sampling probe:

(A) Is defined as the first 25.4 to 76.2 cm of the continuous hydrocarbon sampling system.

(B) Has a 0.483 cm minimum inside diameter.

(C) Is installed in the dilution system at a point where the dilution air and exhaust are well mixed and provide a homogenous mixture.

(D) Is sufficiently distant (radially) from other probes and the system wall so as to be free from the influence of any wakes or eddies.

(E) For a continuous HFID sample probe, the probe must increase the gas stream temperature to 190 ± 11 °C at the exit of the probe. Demonstrate the ability of the probe to accomplish this using the insertion thermocouple technique at initial installation and after any major maintenance. Demonstrate compliance with the temperature specification by continuously recording during each test the temperature of either the gas stream or the wall of the sample probe at its terminus.

(vii) The response time of the continuous measurement system must be taken into account when logging test data.

(3) *Sample mixing.* (i) configure the dilution system to ensure a well mixed, homogeneous sample prior to the sampling probe(s).

(ii) Make the temperature of the diluted exhaust stream inside the dilution system sufficient to prevent water condensation.

(iii) Direct the engine exhaust downstream at the point where it is introduced into the dilution system.

(4) *Continuously integrated NO_X, CO, and CO_2 measurement systems.* (i) Sample probe requirements:

(A) The sample probe for continuously integrated NO_X, CO, and CO_2 must be in the same plane as the continuous HC probe, but sufficiently distant (radially) from other probes and the tunnel wall so as to be free from the influences of any wakes or eddies.

(B) The sample probe for continuously integrated NO_X, CO, and CO_2 must be heated and insulated over the entire length, to prevent water condensation, to a minimum temperature of 55 °C. Sample gas temperature immediately before the first filter in the system must be at least 55 °C.

(ii) Conform to the continuous NO_X, CO, or CO_2 sampling and analysis system to the specifications of part 86, subpart D of this chapter with the following exceptions and revisions:

(A) Heat the system components requiring heating only to prevent water condensation, the minimum component temperature is 55 °C.

(B) Coordinate analysis system response time with CVS flow fluctuations and sampling time/test cycle offsets, if necessary.

(C) Use only analytical gases conforming to the specifications of §91.312 for calibration, zero and span checks.

(D) Use a calibration curve conforming to §91.321 for CO and CO_2 and §91.318 for NO_X for any range on a linear analyzer below 155 ppm.

(iii) Convert the chart deflections or voltage output of analyzers with nonlinear calibration curves to concentration values by the calibration curve(s) specified in §91.321 before flow correction (if used) and subsequent integration takes place.

§91.423 Exhaust gas analytical system; CVS grab sample.

(a) *Schematic drawings.* Figure 4 in appendix B of this subpart is a schematic drawing of the exhaust gas analytical system used for analyzing CVS grab ''bag'' samples from spark-ignition engines. Since various configurations can produce accurate results, exact conformance with the drawing is not required. Additional components such as instruments, valves, solenoids, pumps and switches may be used to provide additional information and coordinate the functions of the component systems. Other components such as snubbers, which are not needed to maintain accuracy in some systems, may be excluded if their exclusion is based on good engineering judgement.

(b) *Major component description.* The analytical system, Figure 4 in Appendix B of this subpart, consists of a

flame ionization detector (FID) or a heated flame ionization detector (HFID) for the measurement of hydrocarbons, nondispersive infrared analyzers (NDIR) for the measurement of carbon monoxide and carbon dioxide, and a chemiluminescence detector (CLD) (or heated CLD (HCLD)) for the measurement of oxides of nitrogen. The exhaust gas analytical system shall conform to the following requirements:

(1) The CLD (or HCLD) requires that the nitrogen dioxide present in the sample be converted to nitric oxide before analysis. Other types of analyzers may be used if shown to yield equivalent results and if approved in advance by the Administrator.

(2) If CO instruments are used which are essentially free of CO_2 and water vapor interference, the use of the conditioning column may be deleted. (See §§ 91.317 and 91.320.)

(3) A CO instrument will be considered to be essentially free of CO_2 and water vapor interference if its response to a mixture of three percent CO_2 in N_2, which has been bubbled through water at room temperature, produces an equivalent CO response, as measured on the most sensitive CO range, which is less than one percent of full scale CO concentration on ranges above 300 ppm full scale or less than 3 ppm on ranges below 300 ppm full scale. (See § 91.317.)

(c) *Alternate analytical systems.* Analysis systems meeting the specifications and requirements of this subpart for dilute sampling may be used upon approval of the Administrator.

(d) *Other analyzers and equipment.* Other types of analyzers and equipment may be used if shown to yield equivalent results and if approved in advance by the Administrator.

§ 91.424 Dilute sampling procedure—CVS calibration.

(a) The CVS is calibrated using an accurate flowmeter and restrictor valve. (1) The flowmeter calibration shall be traceable to the National Institute for Standards and Testing (NIST), and will serve as the reference value (NIST ''true'' value) for the CVS calibration.)

NOTE: In no case should an upstream screen or other restriction which can affect the flow be used ahead of the flowmeter unless calibrated throughout the flow range with such a device.)

(2) The CVS calibration procedures are designed for use of a ''metering venturi'' type flowmeter. Large radius or American Society of Mechanical Engineers (ASME) flow nozzles are considered equivalent if traceable to NIST measurements. Other measurement systems may be used if shown to be equivalent under the test conditions in this section and traceable to NIST measurements.

(3) Measurements of the various flowmeter parameters are recorded and related to flow through the CVS.

(4) Procedures used by EPA for both PDP–CVS and CFV–CVS are outlined below. Other procedures yielding equivalent results may be used if approved in advance by the Administrator.

(b) After the calibration curve has been obtained, verification of the entire system may be performed by injecting a known mass of gas into the system and comparing the mass indicated by the system to the true mass injected. An indicated error does not necessarily mean that the calibration is wrong, since other factors can influence the accuracy of the system (e.g., analyzer calibration, leaks, or HC hangup). A verification procedure is found in paragraph (e) of this section.

(c) *PDP–CVS calibration.* (1) The following calibration procedure outlines the equipment, the test configuration, and the various parameters which must be measured to establish the flow rate of the CVS pump.

(i) All the parameters related to the pump are simultaneously measured with the parameters related to a flowmeter which is connected in series with the pump.

(ii) The calculated flow rate, in cm^3/s, (at pump inlet absolute pressure and temperature) can then be plotted versus a correlation function which is the value of a specific combination of pump parameters.

(iii) The linear equation which relates the pump flow and the correlation function is then determined.

(iv) In the event that a CVS has a multiple speed drive, a calibration for each range used must be performed.

(2) This calibration procedure is based on the measurement of the absolute values of the pump and flowmeter parameters that relate the flow rate at

each point. Two conditions must be maintained to assure the accuracy and integrity of the calibration curve:

(i) The temperature stability must be maintained during calibration. (Flowmeters are sensitive to inlet temperature oscillations; this can cause the data points to be scattered. Gradual changes in temperature are acceptable as long as they occur over a period of several minutes.)

(ii) All connections and ducting between the flowmeter and the CVS pump must be absolutely void of leakage.

(3) During an exhaust emission test the measurement of these same pump parameters enables the user to calculate the flow rate from the calibration equation.

(4) Connect a system as shown in Figure 5 in appendix B of this subpart. Although particular types of equipment are shown, other configurations that yield equivalent results may be used if approved in advance by the Administrator. For the system indicated, the following measurements and accuracies are required:

CALIBRATION DATA MEASUREMENTS

Parameter	Symbol	Units	Sensor-readout tolerances
Barometric pressure (corrected)	P_B	kPa	± 0.34 kPa
Ambient temperature	T_{EI}	°C	± 0.28 °C
Air temperature into metering venturi	T_{EI}	°C	± 1.11 °C
Pressure drop between the inlet and throat of metering venturi.	P_{ED}	kPa	± 0.012 kPa
Air flow	Q_S	m^3/min.	± 0.5 percent of NIST value
Air temperature at CVS pump inlet	P_{TI}	°C	± 1.11 °C
Pressure depression at CVS pump inlet.	P_{PI}	kPa	± 0.055 kPa
Pressure head at CVS pump outlet	P_{PO}	kPa	± 0.055 kPa
Air temperature at CVS pump outlet (optional).	P_{TO}	°C	&εμσπ≧ 1.11 °C
Pump revolutions during test period	N	Revs	± 1 Rev.
Elapsed time for test period	t	s	± 0.5 s.

(5) After the system has been connected as shown in Figure 5 of appendix B of this subpart, set the variable restrictor in the wide open position and run the CVS pump for 20 minutes. Record the calibration data.

(6) Reset the restrictor valve to a more restricted condition in an increment of pump inlet depression that will yield a minimum of six data points for the total calibration. Allow the system to stabilize for 3 minutes and repeat the data acquisition.

(7) Data analysis:

(i) The air flow rate, Q_s, at each test point is calculated in standard cubic feet per minute 20 °C, 101.3 kPa from the flowmeter data using the manufacturer's prescribed method.

(ii) The air flow rate is then converted to pump flow, V_o, in cubic meter per revolution at absolute pump inlet temperature and pressure:

$$V_0 = \frac{Q_s}{n} \times \frac{T_P}{293} \times \frac{101.3\text{kPa}}{P_P}$$

Where:

V_O=Pump flow, m^3/rev at T_P, P_P,

Q_S=Meter air flow rate in standard cubic meters per minute, standard conditions are 20 °C, 101.3 kPa.

n=Pump speed in revolutions per minute.

T_p=Pump inlet temperature in Kelvin,=P_{TI}+273 [°K].

P_P=Absolute pump inlet pressure, kPa.

$=P_P - P_{PI}$

Where:

P_P=barometric pressure, kPa.

P_{PI}=Pump inlet depression, kPa.

(iii) The correlation function at each test point is then calculated from the calibration data:

$$X_o = \frac{1}{n}\sqrt{\left(\frac{\Delta p}{P_e}\right)}$$

Where:

X_O=correlation function.

Δ_P = The pressure differential from pump inlet to pump outlet, kPa.

$=P_E - P_P$.

P_E=Absolute pump outlet pressure, [kPa]

$=P_B+P_{PO}$

Where:

P_{PO}=Pressure head at pump outlet, kPa (inches fluid).

(iv) A linear least squares fit is performed to generate the calibration equation which has the form:

$$V_O = D_O - M(X_O)$$

D_O and M are the intercept and slope constants, respectively, describing the regression line.

(8) A CVS system that has multiple speeds should be calibrated on each speed used. The calibration curves generated for the ranges will be approximately parallel and the intercept values, DO, will increase as the pump flow range decreases.

(9) If the calibration has been performed carefully, the calculated values from the equation will be within ± 0.50 percent of the measured value of V_O. Values of *M* will vary from one pump to another, but values of D_O for pumps of the same make, model and range should agree within ± three percent of each other. Calibrations should be performed at pump start-up and after major maintenance to assure the stability of the pump slip rate. Analysis of mass injection data will also reflect pump slip stability.

(d) CFV–CVS calibration. (1) Calibration of the CFV is based upon the flow equation for a critical venturi.

(i) Gas flow is a function of inlet pressure and temperature:

$$Q_s = \frac{K_v P}{\sqrt{T_K}}$$

Q_S=flow rate [m³/min.].
K_V=calibration coefficient.
P=absolute pressure [kPa].
T_K=absolute temperature [°K].

(ii) The calibration procedure described in paragraph (d)(3) of this section establishes the value of the calibration coefficient at measured values of pressure, temperature and air flow.

(2) The manufacturer's recommended procedure shall be followed for calibrating electronic portions of the CFV.

(3) Measurements necessary for flow calibration are as follows:

CALIBRATION DATA MEASUREMENTS

Parameter	Symbol	Units	Tolerances
Barometric Pressure (corrected)	P_B	kPa	± 0.34 kPa
Air Temperature into flow meter	T_{EI}	°C	± 0.28 °C
Pressure drop between the inlet and throat of metering venturi.	P_{ED}	kPa	± 0.012 kPa
Air flow	Q_S	m³/min.	± 0.5 percent of NIST value
CVS inlet depression	P_{PI}	kPa	± 0.055 kPa
Pressure head at CVS pump outlet	P_{PO}	kPa	± 0.055 kPa
Temperature at venturi inlet	T_V	°C	± 2.22 °C

(4) Set up equipment as shown in Figure 6 in appendix B of this subpart and eliminate leaks. (Leaks between the flow measuring devices and the critical flow venturi will seriously affect the accuracy of the calibration.)

(5) Set the variable flow restrictor to the open position, start the blower, and allow the system to stabilize. Record data from all instruments.

(6) Vary the flow restrictor and make at least eight readings across the critical flow range of the venturi.

(7) Data analysis. The data recorded during the calibration are to be used in the following calculations:

(i) The air flow rate (designated as Q_s) at each test point is calculated in standard cubic feet per minute from the flow meter data using the manufacturer's prescribed method.

(ii) Calculate values of the calibration coefficient for each test point:

$$K_v = \frac{Q_s \sqrt{T_v}}{P_v}$$

Q_S=Flow rate in standard cubic meter per minute, at the standard conditions of 20 °C, 101.3 kPa.
T_V=Temperature at venturi inlet, °K.
P_V=Pressure at venturi inlet, kPA
$=P_B - P_{PI}$
Where:
P_{PI} = Venturi inlet pressure depression, kPa.

(iii) Plot K_V as a function of venturi inlet pressure. For choked flow, K_V will have a relatively constant value. As

pressure decreases (vacuum increases), the venturi becomes unchoked and K_V decreases. (See Figure 7 in appendix B of this subpart)

(iv) For a minimum of eight points in the critical region calculate an average K_V and the standard deviation.

(v) If the standard deviation exceeds 0.3 percent of the average K_V, take corrective action.

(e) CVS system verification. The following ''gravimetric'' technique can be used to verify that the CVS and analytical instruments can accurately measure a mass of gas that has been injected into the system. (Verification can also be accomplished by constant flow metering using critical flow orifice devices.)

(1) Obtain a small cylinder that has been charged with 99.5 percent or greater propane or carbon monoxide gas (CAUTION—carbon monoxide is poisonous).

(2) Determine a reference cylinder weight to the nearest 0.01 grams.

(3) Operate the CVS in the normal manner and release a quantity of pure propane into the system during the sampling period (approximately five minutes).

(4) The calculations are performed in the normal way except in the case of propane. The density of propane (0.6109 kg/m^{3}carbon atom is used in place of the density of exhaust hydrocarbons.

(5) The gravimetric mass is subtracted from the CVS measured mass and then divided by the gravimetric mass to determine the percent accuracy of the system.

(6) Good engineering practice requires that the cause for any discrepancy greater than ± 2 percent must be found and corrected.

§91.425 CVS calibration frequency.

Calibrate the CVS positive displacement pump or critical flow venturi following initial installation, major maintenance or as necessary when indicated by the CVS system verification (described in §91.424(e)).

§91.426 Dilute emission sampling calculations.

(a) The final reported emission test results must be computed by use of the following formula:

$$A_{wm} = \frac{\Sigma(W_i \times f_i)}{\Sigma(P_i \times f_i)} \times K_{Hi}$$

Where:

A_{wm}=Weighted mass emission level (HC, CO, CO_2, or NO_X) for a test [g/kW–hr].

W_i=Average mass flow rate of an emission from a test engine during mode i [g/hr].

WF_i = Weighting factor for each mode i as defined in §91.410(a).

P_i = Gross average power generated during mode i [kW] calculated from the following equation (power for the idle mode shall always be zero for this calculation):

$$P_i = \frac{2\Pi}{60{,}000} \times \text{speed} \times \text{torque}$$

speed = average engine speed measured during mode i [rev./minute]

torque = average engine torque measured during mode i [N–m]

K_{Hi} = Humidity correction factor for mode i. This correction factor only affects calculations for NO_X and is equal to one for all other emissions. K_{Hi} is also equal to one for all two-stroke engines.

(b) The mass flow rate (W_i) of an emission for mode i is determined from the following equation:

$$W_i = Q_i \times D \times \left(C_{Di} - C_{Bi} \times \left(1 - \frac{1}{DF_i}\right)\right)$$

Where:

Q_i = Volumetric flow rate of the dilute exhaust through the CVS at standard conditions [m^3/hr at STP].

D = Density of a specific emission (D_{HC}, D_{CO}, D_{CO2}, D_{NOx}) in the exhaust [g/m^3].

DF_i = Dilution factor of the dilute exhaust during mode i.

C_{Di} = Concentration of the emission (HC, CO, NO_X) in the dilute exhaust extracted from the CVS during mode i [ppm].

C_{Bi} = Concentration of the emission (HC, CO, NO_X) in the background sample during mode i [ppm].

STP = Standard temperature and pressure. All volumetric calculations made for the equations in this section are to be corrected to a standard temperature of 20 °C and 101.3 kPa.

(c) Densities for emissions that are to be measured for this test procedure are:

D_{HC} = 576.8 g/m^3
DNO_X = 1912 g/m^3
D_{CO} = 1164 g/m^3
D_{CO2} = 1829 g/m^3

(1) The value of D_{HC} above is calculated based on the assumption that the fuel used has a carbon to hydrogen ratio of 1:1.85. For other fuels, D_{HC} can be calculated from the following formula:

$$D_{HC} = \frac{M_{HC}}{R_{STP}}$$

Where:
M_{HC} = Molecular weight of the hydrocarbon molecule divided by the number of carbon atoms in the molecule [g/mole].
R_{STP} = Ideal gas constant for a gas at STP = 0.024065 [m^3-mole].

(2) The idealized molecular weight of the exhaust hydrocarbons, ie., the molecular weight of the hydrocarbon molecule divided by the number of carbon atoms in the molecule, M_{HC} can be calculated from the following formula:

$$M_{HC} = M_C + \alpha M_H + \beta M_O$$

Where:
M_C = Molecular weight of carbon = 12.01 [g/mole].
M_H = Molecular weight of hydrogen = 1.008 [g/mole].
α = Hydrogen to carbon ratio of the test fuel.

(3) The value of D_{NOx} above assumes that NO_X in entirely in the form of NO_2.

(d) The dilution factor (DF) is the ratio of the volumetric flow rate of the background air to that of the raw engine exhaust. The following formula is used to determine DF:

$$DF = \frac{13.4}{C_{D_{HC}} + C_{D_{CO}} + C_{D_{CO_2}}}$$

Where:
C_{DHC} = Concentration of HC in the dilute sample [ppm].
C_{DCO} = Concentration of CO in the dilute sample [ppm].
C_{DCO2} = Concentration of CO_2 in the dilute sample [ppm].

(e) The humidity correction factor K_H is an adjustment made to the measured NO_X. This corrects for the sensitivity that a spark-ignition engine has to the humidity of its combustion air. The following formula is used to determine K_H for NO_X calculations:

$$K_H = \frac{1}{1 - 0.0329(H - 10.71)}$$

Where:
H = Absolute humidity of the engine intake air [grams of water per kilogram of dry air].

(f) The absolute humidity of the engine intake air H is calculated using the following formula:

$$H = \frac{6.211\, P_{dew}}{P_B - \left(\frac{P_{dew}}{100}\right)}$$

Where:
P_{dew} = Saturated vapor pressure at the dew point temperature [kPa].
P_b = Barometric pressure [kPa].

(g) The fuel mass flow rate F_i can be either measured or calculated using the following formula:

$$F_i = \frac{M_f}{T}$$

Where:
M_f = Mass of fuel consumed by the engine during the mode [g].
T = Duration of the sampling period [hr].

(h) The mass of fuel consumed during the mode sampling period, M_{FUEL} can be calculated from the following equation:

$$M_f = \frac{G_S}{R_2 \times 273.15}$$

Where:
G_S = Mass of carbon measured during the mode sampling period [g].
R_2 = The fuel carbon weight fraction, which is the mass of carbon in fuel per mass of fuel [g/g].

(i) The grams of carbon measured during the mode G_S can be calculated from the following equation:

$$G_S = \frac{12.011 \times HC_{mass}}{12.011 + 1.008\alpha} + 0.429CO_{mass} + 0.273CO_{2\,mass}$$

Where:

HC_{mass} = mass of hydrocarbon emissions for the mode sampling period [g].

CO_{mass} = mass of carbon monoxide emissions for the mode sampling period [g].

CO_{2mass} = mass of carbon dioxide emissions for the mode sampling period [g].

α = The atomic hydrogen to carbon ratio of the fuel.

§ 91.427 Catalyst thermal stress resistance evaluation.

(a)(1) The purpose of the evaluation procedure specified in this section is to determine the effect of thermal stress on catalyst conversion efficiency. The thermal stress is imposed on the test catalyst by exposing it to quiescent heated air in an oven. The evaluation of the effect of such stress on catalyst performance is based on the resultant degradation of the efficiency with which the conversions of specific pollutants are promoted. The application of this evaluation procedure involves the several steps that are described in the following paragraphs.

(2) The engine manufacturer need not submit catalyst conversion efficiency data for pollutants that the catalyst being tested was not designed to reduce/oxidize. The engine manufacturer must specify the pollutants that the catalyst will be converting and submit catalyst conversion efficiency data on only those pollutants.

(b) Determination of initial conversion efficiency.

(1) A synthetic exhaust gas mixture having the composition specified in § 91.329 is heated to a temperature of 450 ± 5 °C and passed through the new test catalyst or, optionally, a test catalyst that has been exposed to temperatures less than or equal to 500 °C for less than or equal to two hours, under flow conditions that are representative of anticipated in-use conditions.

(2) The concentration of each pollutant of interest, that is, hydrocarbons, carbon monoxide, or oxides of nitrogen, in the effluent of the catalyst is determined by means of the instrumentation that is specified for exhaust gas analysis in subpart D of this part.

(3) The conversion efficiency for each pollutant is determined by:

(i) Subtracting the effluent concentration from the initial concentration,

(ii) Dividing this result by the initial concentration,

(iii) Multiplying this result by 100 percent.

(c) Imposition of thermal stress.

(1) The catalyst is placed in an oven that has been pre-heated to 1000 °C and the temperature of the air in the oven is maintained at 1000 ± 10 °C for six hours. Optionally, the catalyst may instead be placed in an oven having a 90% nitrogen/10% water vapor environment that has been pre-heated to at least 850 °C and the temperature of the nitrogen/water vapor environment in the oven is maintained at 850 °C ± 10 °C for six hours.

(2) The catalyst is removed from the oven and allowed to cool to room temperature.

(d) Determination of final conversion efficiency. The steps listen in paragraph (b) of this section are repeated.

(e) Determination of conversion efficiency degradation.

(1) The final conversion efficiency determined in paragraph (c) of this section is subtracted from the initial conversion efficiency determined in paragraph (b) of this section.

(2) This result is divided by the initial conversion efficiency.

(3) This result is multiplied by 100 percent.

(f) Determination of compliance with degradation limit. The percent degradation determined in paragraph (e) of this section must not be greater than 20 percent.

Appendix A to Subpart E of Part 91—Tables

Table 1—Parameters To Be Measured or Calculated and Recorded

Parameter	Units
Airflow rate (dry), if applicable	g/h
Fuel flow rate	g/h
Engine speed	rpm
Engine torque output	N&διωιδε≡. m
Power output	kW
Air inlet temperature	°C
Air humidity	mg/kg
Coolant temperature (liquid cooled)	°C
Exhaust mixing chamber surface temperature, if applicable.	°C
Exhaust sample line temperature, if applicable	°C

TABLE 1—PARAMETERS TO BE MEASURED OR CALCULATED AND RECORDED—Continued

Parameter	Units
Total accumulated hours of engine operation	h
Barometric pressure	kPa

TABLE 2—TEST CYCLE AND WEIGHTING FACTORS FOR MARINE ENGINES>

Mode No.	Engine speed as a percentage of engine rated speed	Engine torque as a percentage of maximum torque at rated speed	Mode weighting factor
1	100	100	0.06
2	80	71.6	0.14
3	60	46.5	0.15
4	40	25	0.25
5	idle	0	0.40

APPENDIX B TO SUBPART E OF PART 91—FIGURES

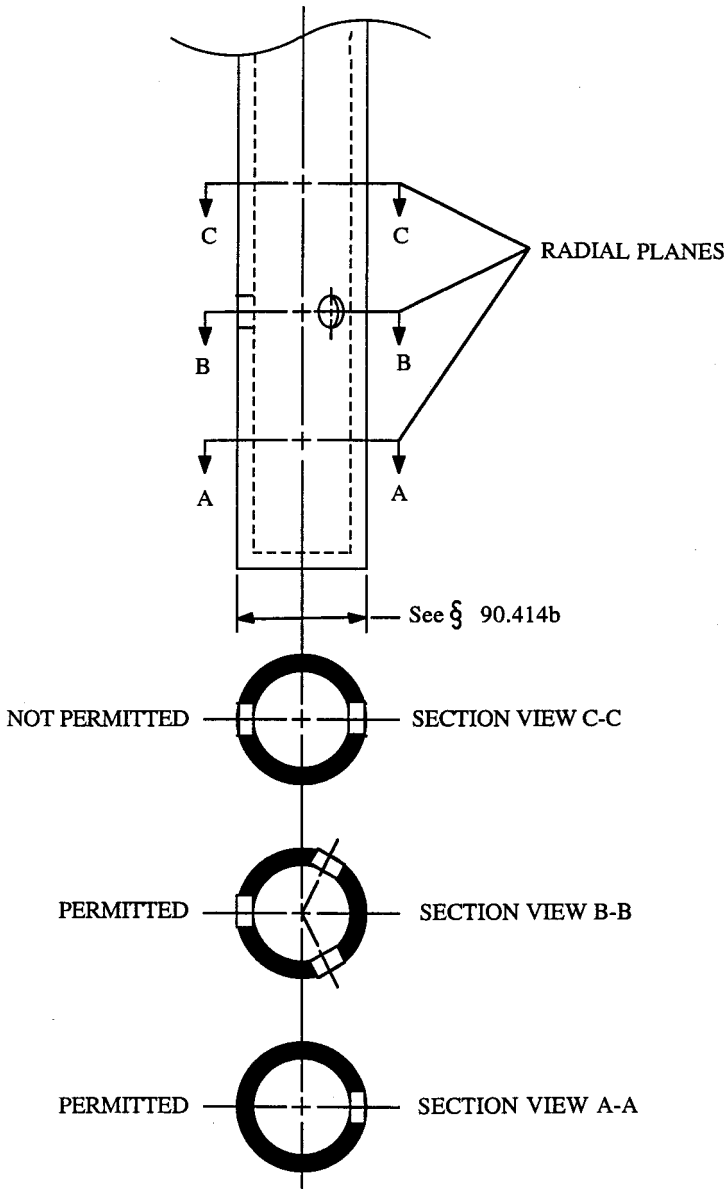

Figure 1.—Sample Probe and Typical Hole Spacings

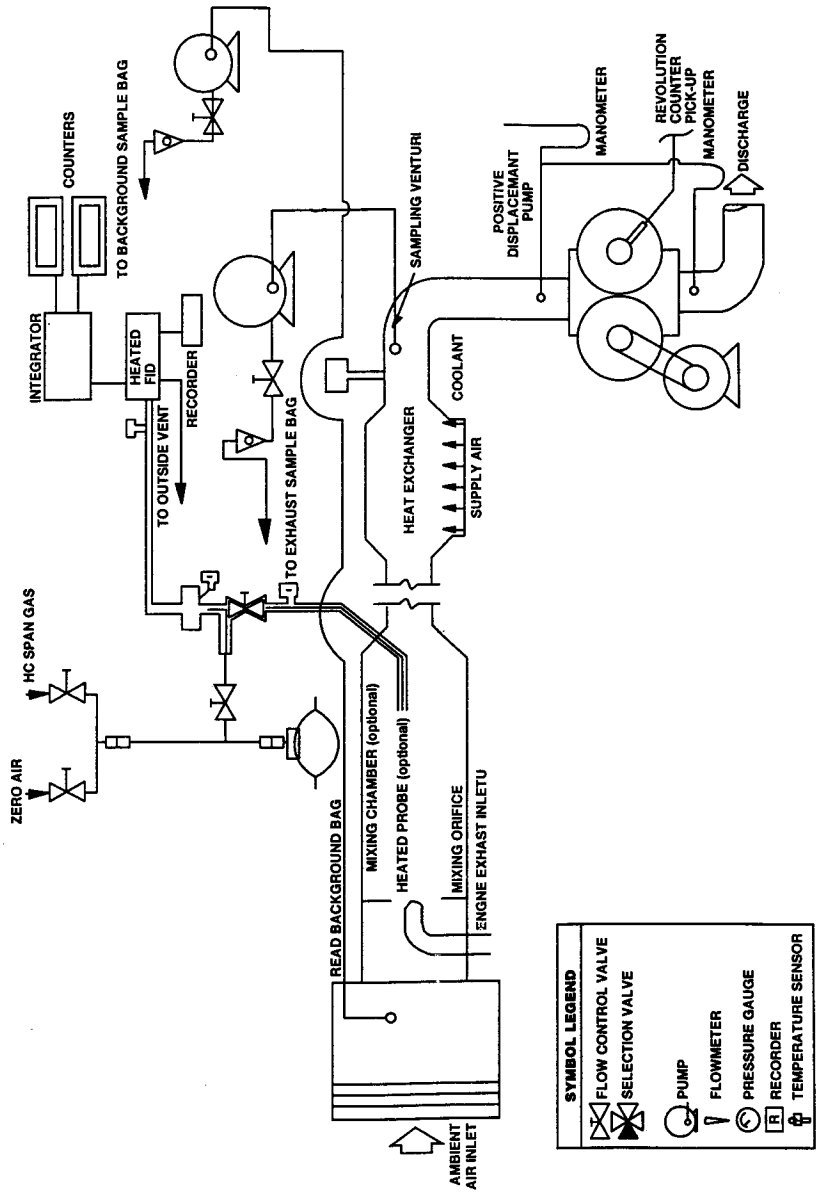

Figure 2 — Gaseous Emissions Sampling System (PDP-CVS) Showing both grab bag sampling and continous sampling

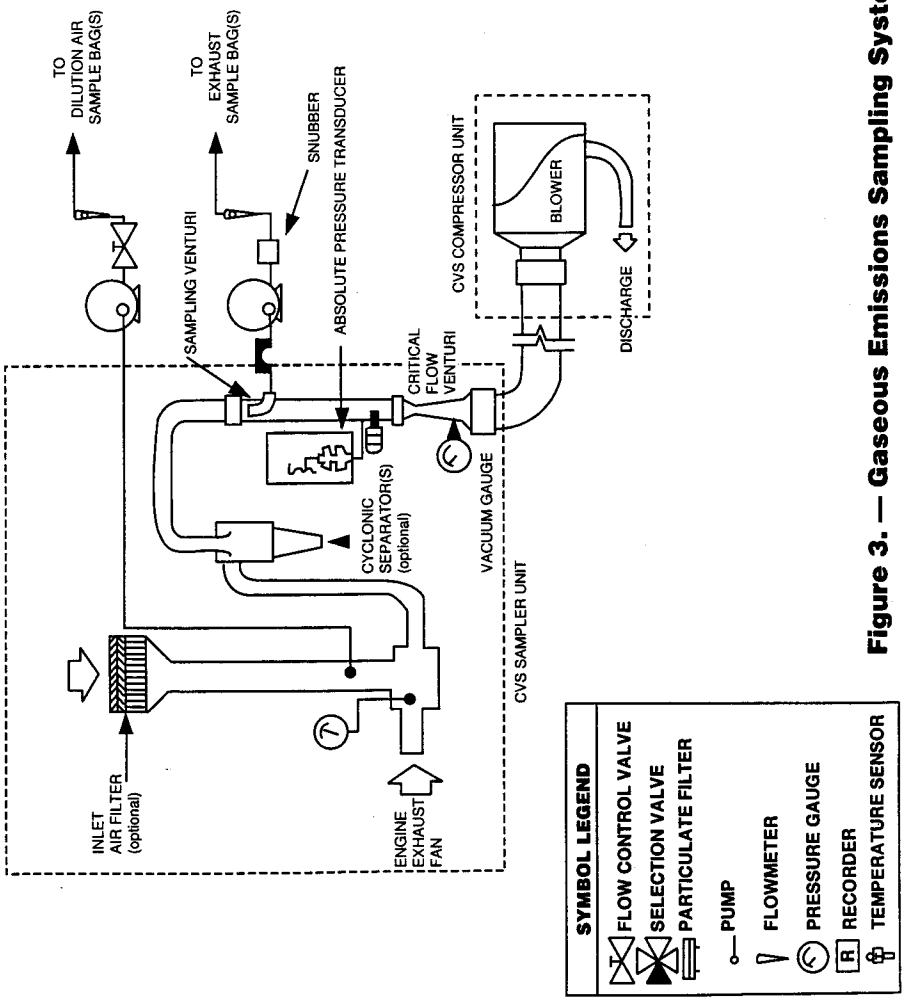

Figure 3. — Gaseous Emissions Sampling System (CVF-CVS)

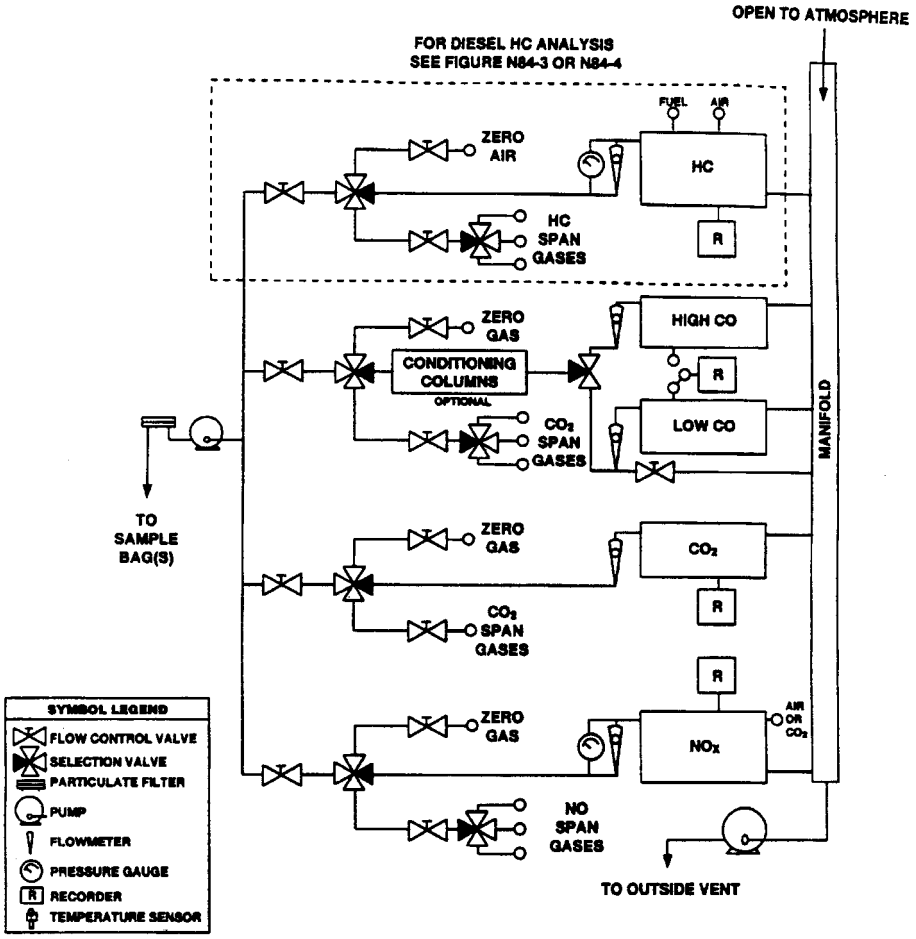

Figure 4. — Exhaust Gas Analytical System

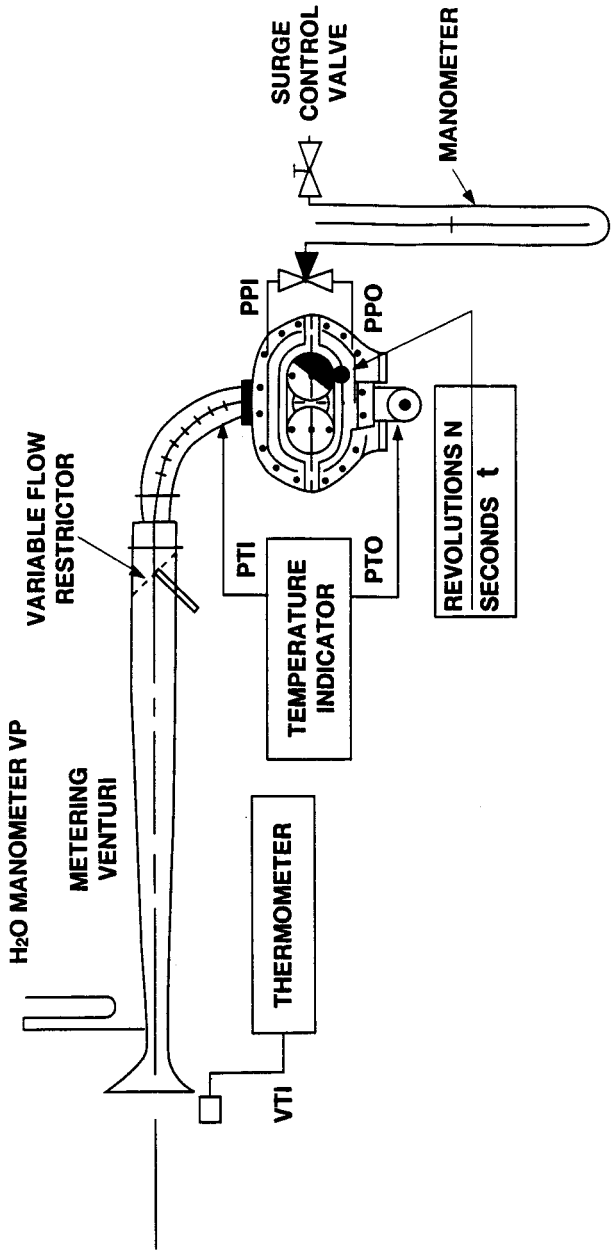

Figure 5. — PDP-CVS Calibration Configuration

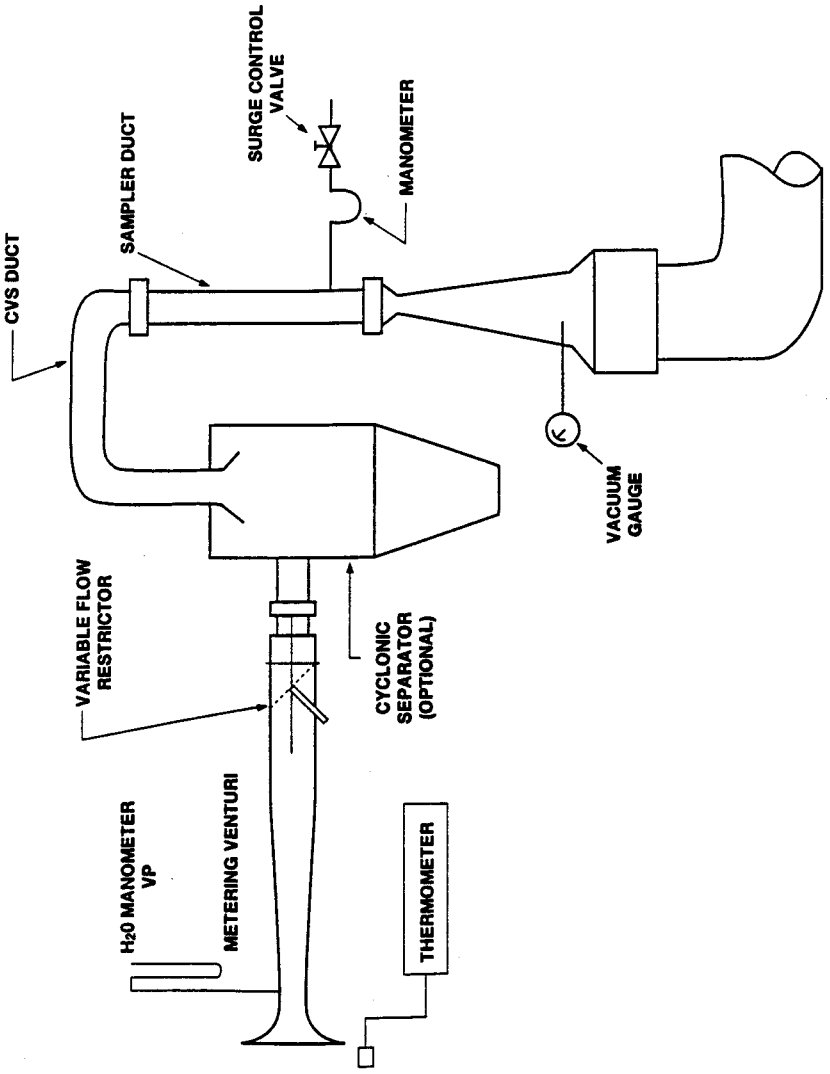

Figure 6. — CFV-CVS Calibration Configuration

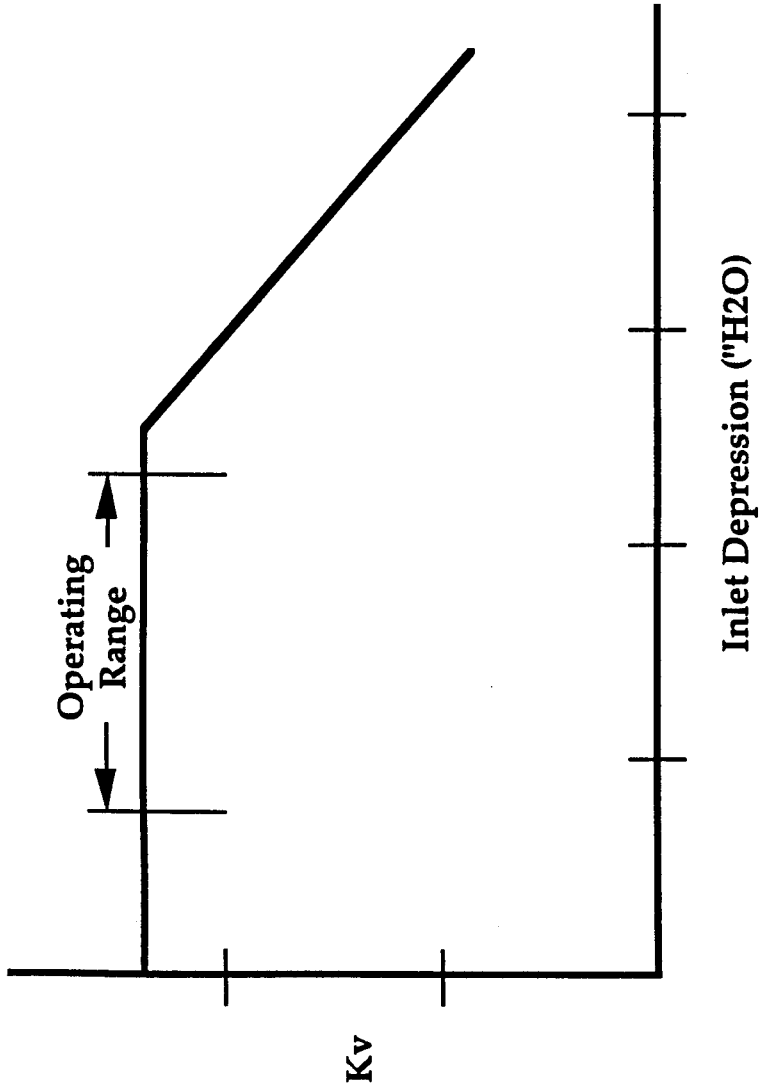

Figure 7.—Sonic Flow Choking

Subpart F—Manufacturer Production Line Testing Program

§91.501 Applicability.

(a) The requirements of this subpart F are applicable to all marine spark-ignition engines subject to the provisions of subpart A of this part 91.

(1) This subpart F applies to marine spark-ignition outboard engines beginning with model year 1999.

(2) This subpart F applies to marine spark-ignition personal watercraft engines beginning with model year 2000.

(b) The Administrator may waive the provisions of this subpart for a manufacturer or a specific engine family, as

specified in paragraphs (b) (1), (2) and (3) of this section.

(1) The provisions of this subpart are waived for existing technology OB/PWC through model year 2003.

(2) Upon request by a manufacturer, the Administrator may waive the provisions of this subpart for existing technology OB/PWC for a specific engine family through model year 2005 if the Administrator determines that the engine family will be phased out of production for sale in the U.S. by the end of model year 2005. As a condition to receiving such a waiver for either model year 2004, 2005 or both, the manufacturer must discontinue production of engines for sale in the U.S. according to a schedule determined by the Administrator upon granting this waiver. Failure to do so by the manufacturer will void *ab initio* the applicable certificate of conformity.

(3) A manufacturer request under paragraph (b)(2) of this section must be in writing and apply to a specific engine family. The request must identify the engine family designation, a written rationale supporting the FEL choice, the type of information used as a basis for the FEL (e.g., previous emission tests, development tests), the specific source of the information including when the information was generated, the requested schedule for phasing the engine family out of production, and any other information the Administrator may require.

[61 FR 52102, Oct. 4, 1996, as amended at 62 FR 15808, Apr. 2, 1997]

§ 91.502 Definitions.

The definitions in subpart A of this part apply to this subpart. The following definitions also apply to this subpart.

Configuration means any subclassification of an engine family which can be described on the basis of gross power, emission control system, governed speed, injector size, engine calibration, and other parameters as designated by the Administrator.

Test sample means the collection of engines selected from the population of an engine family for emission testing.

§ 91.503 Production line testing by the manufacturer.

(a) Manufacturers of marine SI engines shall test production line engines from each engine family according to the provisions of this subpart.

(b) Production line engines must be tested using the test procedure specified in subpart E of this part that was used in certification unless an alternate procedure is approved by the Administrator. Any adjustable engine parameter must be set to values or positions that are within the range recommended to the ultimate purchaser, unless otherwise specified by the Administrator. The Administrator may specify values within or without the range recommended to the ultimate purchaser.

§ 91.504 Maintenance of records; submittal of information.

(a) The manufacturer of any new marine SI engine subject to any of the provisions of this subpart must establish, maintain, and retain the following adequately organized and indexed records:

(1) *General records.* A description of all equipment used to test engines in accordance with § 91.503. Subpart D of this part sets forth relevant equipment requirements in §§ 91.306, 91.308, 91.309, and 91.313.

(2) *Individual records.* These records pertain to each production line test conducted pursuant to this subpart and include:

(i) The date, time, and location of each test;

(ii) The number of hours of service accumulated on the test engine when the test began and ended;

(iii) The names of all supervisory personnel involved in the conduct of the production line test;

(iv) A record and description of any adjustment, repair, preparation or modification performed prior to and/or subsequent to approval by the Administrator pursuant to § 91.507(b)(1), giving the date, associated time, justification, name(s) of the authorizing personnel, and names of all supervisory personnel responsible for the conduct of the repair;

(v) If applicable, the date the engine was shipped from the assembly plant,

associated storage facility or port facility, and the date the engine was received at the testing facility;

(vi) A complete record of all emission tests performed pursuant to this subpart (except tests performed directly by EPA), including all individual worksheets and/or other documentation relating to each test, or exact copies thereof, in accordance with the record requirements specified in § 91.405.

(vii) A brief description of any significant events during testing not otherwise described under paragraph (a)(2) of this section, commencing with the test engine selection process and including such extraordinary events as engine damage during shipment.

(3) The manufacturer must establish, maintain and retain general records, pursuant to paragraph (a)(1) of this section, for each test cell that can be used to perform emission testing under this subpart.

(b) The manufacturer must retain all records required to be maintained under this subpart for a period of one year after completion of all testing required for the engine family in a model year. Records may be retained as hard copy (i.e., on paper) or reduced to microfilm, floppy disk, or some other method of data storage, depending upon the manufacturer's record retention procedure; provided, that in every case, all the information contained in the hard copy is retained.

(c) The manufacturer must, upon request by the Administrator, submit the following information with regard to engine production:

(1) Projected production or actual production for each engine configuration within each engine family for which certification has been requested and/or approved,

(2) Number of engines, by configuration and assembly plant, scheduled for production or actually produced.

(d) Nothing in this section limits the Administrator's discretion to require a manufacturer to establish, maintain, retain or submit to EPA information not specified by this section.

(e) All reports, submissions, notifications, and requests for approval made under this subpart must be addressed to: Manager, Engine Compliance Programs Group 6403J, U.S. Environmental Protection Agency, 1200 Pennsylvania Ave., NW., Washington, DC 20460.

(f) The manufacturer must electronically submit the results of its production line testing using an EPA information format. The Administrator may exempt manufacturers from this requirement upon written request with supporting justification.

§ 91.505 Right of entry and access.

(a) To allow the Administrator to determine whether a manufacturer is complying with the provisions of this or other subparts of this part, one or more EPA enforcement officers may enter during operating hours and upon presentation of credentials any of the following places:

(1) Any facility, including ports of entry, where any engine to be introduced into commerce or any emission-related component is manufactured, assembled, or stored;

(2) Any facility where any test conducted pursuant to this or any other subpart or any procedure or activity connected with such test is or was performed;

(3) Any facility where any test engine is present; and

(4) Any facility where any record required under § 91.504 or other document relating to this subpart or any other subpart of this part is located.

(b) Upon admission to any facility referred to in paragraph (a) of this section, EPA enforcement officers are authorized to perform the following inspection-related activities:

(1) To inspect and monitor any aspect of engine manufacture, assembly, storage, testing and other procedures, and to inspect and monitor the facilities in which these procedures are conducted;

(2) To inspect and monitor any aspect of engine test procedures or activities, including test engine selection, preparation and service accumulation, emission test cycles, and maintenance and verification of test equipment calibration;

(3) To inspect and make copies of any records or documents related to the assembly, storage, selection, and testing of an engine; and

(4) To inspect and photograph any part or aspect of any engine and any

component used in the assembly thereof that is reasonably related to the purpose of the entry.

(c) EPA enforcement officers are authorized to obtain reasonable assistance without cost from those in charge of a facility to help the officers perform any function listed in this subpart and they are authorized to request the manufacturer to make arrangements with those in charge of a facility operated for the manufacturer's benefit to furnish reasonable assistance without cost to EPA.

(1) Reasonable assistance includes, but is not limited to, clerical, copying, interpretation and translation services; the making available on an EPA enforcement officer's request of personnel of the facility being inspected during their working hours to inform the EPA enforcement officer of how the facility operates and to answer the officer's questions; and the performance on request of emission tests on any engine which is being, has been, or will be used for production line or other testing.

(2) By written request, signed by the Assistant Administrator for Air and Radiation, and served on the manufacturer, a manufacturer may be compelled to cause the personal appearance of any employee at such a facility before an EPA enforcement officer. Any such employee who has been instructed by the manufacturer to appear will be entitled to be accompanied, represented, and advised by counsel.

(d) EPA enforcement officers are authorized to seek a warrant or court order authorizing the EPA enforcement officers to conduct the activities authorized in this section, as appropriate, to execute the functions specified in this section. EPA enforcement officers may proceed *ex parte* to obtain a warrant or court order whether or not the EPA enforcement officers first attempted to seek permission from the manufacturer or the party in charge of the facility(ies) in question to conduct the activities authorized in this section.

(e) A manufacturer must permit an EPA enforcement officer(s) who presents a warrant or court order to conduct the activities authorized in this section as described in the warrant or court order. The manufacturer must also cause those in charge of its facility or a facility operated for its benefit to permit entry and access as authorized in this section pursuant to a warrant or court order whether or not the manufacturer controls the facility. In the absence of a warrant or court order, an EPA enforcement officer(s) may conduct the activities authorized in this section only upon the consent of the manufacturer or the party in charge of the facility(ies) in question.

(f) It is not a violation of this part or the Clean Air Act for any person to refuse to permit an EPA enforcement officer(s) to conduct the activities authorized in this section if the officer(s) appears without a warrant or court order.

(g) A manufacturer is responsible for locating its foreign testing and manufacturing facilities in jurisdictions where local law does not prohibit an EPA enforcement officer(s) from conducting the entry and access activities specified in this section. EPA will not attempt to make any inspections which it has been informed local foreign law prohibits.

§ 91.506 Engine sample selection.

(a) At the start of each model year, the marine SI engine manufacturer will begin to randomly select engines from each engine family for production line testing at a rate of one percent. Each engine will be selected from the end of the assembly line.

(1) *For newly certified engine families:* After two engines are tested, the manufacturer will calculate the required sample size for the model year according to the Sample Size Equation in paragraph (b) of this section.

(2) *For carry-over engine families:* After one engine is tested, the manufacturer will combine the test with the last test result from the previous model year and then calculate the required sample size for the model year according to the Sample Size Equation in paragraph (b) of this section.

(b)(1) Manufacturers will calculate the required sample size for the model year for each engine family using the Sample Size Equation below. N is calculated from each test result. The number N indicates the number of tests

required for the model year for an engine family. N, is recalculated after each test. Test results used to calculate the variables in the Sample Size Equation must be final deteriorated test results as specified in §91.509(c).

$$N = \left[\frac{(t_{95} * \sigma)}{(x - FEL)} \right]^2 + 1$$

where:

N=required sample size for the model year.

t_{95}=95% confidence coefficient. It is dependent on the actual number of tests completed, n, as specified in the table in paragraph (b)(2) of this section. It defines one-tail, 95 percent confidence intervals.

σ=actual test sample standard deviation calculated from the following equation:

$$\sigma = \sqrt{\frac{\Sigma(X_i - x)^2}{n - 1}}$$

x_i=emission test result for an individual engine

x=mean of emission test results of the actual sample

FEL=Family Emission Limit

n=The actual number of tests completed in an engine family

(2) Actual Number of Tests (n) & 1-tail Confidence Coefficients (t_{95})

n	t_{95}	n	t_{95}	n	t_{95}
2	6.31	12	1.80	22	1.72
3	2.92	13	1.78	23	1.72
4	2.35	14	1.77	24	1.71
5	2.13	15	1.76	25	1.71
6	2.02	16	1.75	26	1.71
7	1.94	17	1.75	27	1.71
8	1.90	18	1.74	28	1.70
9	1.86	19	1.73	29	1.70
10	1.83	20	1.73	30	1.70
11	1.81	21	1.72	∞	1.645

(3) A manufacturer must distribute the testing of the remaining number of engines needed to meet the required sample size N, evenly throughout the remainder of the model year.

(4) After each new test, the required sample size, N, is recalculated using updated sample means, sample standard deviations and the appropriate 95% confidence coefficient.

(5) A manufacturer must continue testing and updating each engine family's sample size calculations according to paragraphs (b)(1) through (b)(4) of this section until a decision is made to stop testing as described in paragraph (b)(6) of this section or a noncompliance decision is made pursuant to §91.510(b).

(6) If, at any time throughout the model year, the calculated required sample size, N, for an engine family is less than or equal to the actual sample size, n, and the sample mean, x, for $HC+NO_x$ is less than or equal to the FEL, the manufacturer may stop testing that engine family.

(7) If, at any time throughout the model year, the sample mean, x, for $HC+NO_x$ is greater than the FEL, the manufacturer must continue testing that engine family at the appropriate maximum sampling rate.

(8) The maximum required sample size for an engine family (regardless of the required sample size, N, as calculated in paragraph (b)(1) of this section) is the lesser of thirty tests per model year or one percent of projected annual production for that engine family for that model year.

(9) Manufacturers may elect to test additional randomly chosen engines. All additional randomly chosen engines tested in accordance with the testing procedures specified in §91.507 must be included in the Sample Size and Cumulative Sum equation calculations as defined in paragraph (b)(1) of this section and §91.508(a), respectively.

(c) The manufacturer must produce and assemble the test engines using its normal production and assembly process for engines to be distributed into commerce.

(d) No quality control, testing, or assembly procedures will be used on any test engine or any portion thereof, including parts and subassemblies, that have not been or will not be used during the production and assembly of all other engines of that family, unless the Administrator approves the modification in production or assembly procedures.

§91.507 Test procedures.

(a)(1) For marine SI engines subject to the provisions of this subpart, the prescribed test procedures are specified in subpart E of this part.

(2) The Administrator may, on the basis of a written application by a

manufacturer, prescribe test procedures other than those specified in paragraph (a)(1) of this section for any marine engine he or she determines is not susceptible to satisfactory testing using procedures specified in paragraph (a)(1) of this section.

(b)(1) The manufacturer may not adjust, repair, prepare, or modify any test engine and may not perform any emission test on any test engine unless this adjustment, repair, preparation, modification and/or test is documented in the manufacturer's engine assembly and inspection procedures and is actually performed by the manufacturer or unless this adjustment, repair, preparation, modification and/or test is required or permitted under this subpart or is approved in advance by the Administrator.

(2) The Administrator may adjust or require to be adjusted any engine parameter which the Administrator has determined to be subject to adjustment for certification, production line testing and Selective Enforcement Audit testing, to any setting within the physically adjustable range of that parameter, as determined by the Administrator, prior to the performance of any test. However, if the idle speed parameter is one which the Administrator has determined to be subject to adjustment, the Administrator may not adjust it or require that it be adjusted to any setting which causes a lower engine idle speed than would have been possible within the physically adjustable range of the idle speed parameter if the manufacturer had accumulated 12 hours of service on the engine under paragraph (c) of this section, all other parameters being identically adjusted for the purpose of the comparison. The manufacturer may be requested to supply information necessary to establish an alternate minimum idle speed. The Administrator, in making or specifying these adjustments, may consider the effect of the deviation from the manufacturer's recommended setting on emission performance characteristics as well as the likelihood that similar settings will occur on in-use engines. In determining likelihood, the Administrator may consider factors such as, but not limited to, the effect of the adjustment on engine performance characteristics and information from similar in-use engines.

(c) Service accumulation. (1) Prior to performing exhaust emission production line testing, the manufacturer may accumulate on each test engine a number of hours of service equal to the greater of 12 hours or the number of hours the manufacturer accumulated during certification on the emission data engine for each engine family.

(2) Service accumulation must be performed in a manner using good engineering judgment to obtain emission results representative of production line engines.

(d) The manufacturer may not perform any maintenance on test engines after selection for testing.

(e) If an engine is shipped to a remote facility for production line testing, and an adjustment or repair is necessary because of shipment, the engine manufacturer must perform the necessary adjustment or repair only after the initial test of the engine, except in cases where the Administrator has determined that the test would be impossible or unsafe to perform or would permanently damage the engine. Engine manufacturers must report to the Administrator, in the quarterly report required by § 91.509(e), all adjustments or repairs performed on test engines prior to each test.

(f) If an engine cannot complete the service accumulation or an emission test because of a malfunction, the manufacturer may request that the Administrator authorize either the repair of that engine or its deletion from the test sequence.

(g) *Testing.* A manufacturer must test engines with the test procedure specified in subpart E of this part to demonstrate compliance with the applicable FEL. If alternate procedures were used in certification, then those alternate procedures must be used in production line testing.

(h) *Retesting.* (1) If an engine manufacturer reasonably determines that an emission test of an engine is invalid, the engine may be retested. Emission results from all tests must be reported to EPA. The engine manufacturer must also include a detailed explanation of the reasons for invalidating any test in the quarterly report required in

§91.509(e). In the event a retest is performed, a request may be made to the Administrator, within ten days of the end of the production quarter, for permission to substitute the after-repair test results for the original test results. The Administrator will either affirm or deny the request by the engine manufacturer within ten working days from receipt of the request.

§91.508 Cumulative Sum (CumSum) procedure.

(a) Manufacturers must construct the following CumSum Equation for $HC+NO_X$ for each engine family. Test results used to calculate the variables in the CumSum Equation must be final deteriorated test results as defined in §91.509(c).

$$C_i = \max[0\ 0R\ (C_{i-1} + X_i - (FEL + F))]$$

Where:

C_i = The current CumSum statistic

C_{i-1} = The previous CumSum statistic. Prior to any testing, the CumSum statistic = 0 (i.e. $C_0 = 0$)

X_i = The current emission test result for an individual engine

FEL = Family Emission Limit

$F = 0.25 \times \sigma$

After each test, C_i is compared to the action limit, H, the quantity which the CumSum statistic must exceed, in two consecutive tests, before the engine family may be determined to be in noncompliance for purposes of §91.510.

H = The Action Limit. It is $5.0 \times \sigma$, and is a function of the standard deviation, σ.

σ = is the sample standard deviation and is recalculated after each test.

(b) After each engine is tested, the CumSum statistic shall be promptly updated according to the CumSum Equation in paragraph (a) of this section.

(c)(1) If, at any time during the model year, a manufacturer amends the application for certification for an engine family as specified in paragraph (a) of §91.122 by performing an engine family modification (i.e. a change such as a running change involving a physical modification to an engine, a change in specification or setting, the addition of a new configuration, or the use of a different deterioration factor) with no changes to the FEL, all previous sample size and CumSum statistic calculations for the model year will remain unchanged.

(2) If, at any time during the model year, a manufacturer amends the application for certification for an engine family as specified in paragraph (a) of §91.122 by modifying its FEL as a result of an engine family modification, the manufacturer must continue its calculations by inserting the new FEL into the sample size equation as specified in §91.506(b)(1) and into the CumSum equation in paragraph (a) of this section. All previous calculations remain unchanged. If the sample size calculation indicates that additional tests are required, then those tests must be performed. The CumSum statistic recalculation must not indicate that the family has exceeded the action limit for two consecutive tests. The manufacturer's final credit report as required by §91.210 must break out the credits that result from each FEL and corresponding CumSum analysis for each FEL set.

(3) If, at any time during the model year, a manufacturer amends the application for certification for an engine family as specified in paragraph (a) of §91.122 by modifying its FEL without performing an engine modification, all previous sample size and CumSum statistic calculations for the model year must be recalculated using the new FEL. If the sample size calculation indicates that additional tests are required, then those tests must be performed. The CumSum statistic recalculation must not indicate that the family has exceeded the action limit for two consecutive tests.

(4) If, at any time after the end of the model year but prior to the manufacturer's final credit report submittal as specified in §91.210, a manufacturer changes an FEL for an entire family, or for an affected part of the year's production, as specified in paragraph (a) of §91.122, in cases where there were one or more mid-year engine family modifications, all previous sample size and CumSum statistic calculations for the model year, or part of the model year affected by an engine family change, must be recalculated using the new FEL. The sample size equation must not indicate a larger number of

tests than were appropriately performed using the previous FEL and the CumSum statistic recalculation must not exceed the action limit in two consecutive tests. The manufacturer's final credit report as required by § 91.210 must break out the credits that result from each FEL and corresponding CumSum analysis for each FEL set.

§ 91.509 Calculation and reporting of test results.

(a) Initial test results are calculated following the applicable test procedure specified in paragraph (a) of § 91.507. The manufacturer rounds these results, in accordance with ASTM E29–93a, to the number of decimal places contained in the applicable emission standard expressed to one additional significant figure. (ASTM E29–93a has been incorporated by reference. See § 91.6.)

(b) Final test results are calculated by summing the initial test results derived in paragraph (a) of this section for each test engine, dividing by the number of tests conducted on the engine, and rounding in accordance with ASTM E29–93a to the same number of decimal places contained in the applicable standard expressed to one additional significant figure.

(c) The final deteriorated test results for each test engine are calculated by applying the appropriate deterioration factors, derived in the certification process for the engine family, to the final test results, and rounding in accordance with ASTM E29–93a to the same number of decimal places contained in the applicable standard expressed to one additional significant figure.

(d) If, at any time during the model year, the CumSum statistic exceeds the applicable action limit, H, in two consecutive tests, the engine family may be determined to be in noncompliance and the manufacturer must notify EPA within two working days of such exceedance by the CumSum statistic.

(e) Within 30 calendar days of the end of each quarter, each engine manufacturer must submit to the Administrator a report which includes the following information:

(1) The location and description of the manufacturer's or other's exhaust emission test facilities which were utilized to conduct testing reported pursuant to this section;

(2) Total production and sample sizes, N and n, for each engine family;

(3) The FEL against which each engine family was tested;

(4) A description of the process to obtain engines on a random basis;

(5) A description of the test engines;

(6) For each test conducted,

(i) A description of the test engine, including:

(A) Configuration and engine family identification,

(B) Year, make, and build date,

(C) Engine identification number, and

(D) Number of hours of service accumulated on engine prior to testing;

(ii) Location where service accumulation was conducted and description of accumulation procedure and schedule;

(iii) Test number, date, test procedure used, initial test results before and after rounding, and final test results for all exhaust emission tests, whether valid or invalid, and the reason for invalidation, if applicable;

(iv) A complete description of any adjustment, modification, repair, preparation, maintenance, and/or testing which was performed on the test engine, was not reported pursuant to any other paragraph of this subpart, and will not be performed on all other production engines;

(v) A CumSum analysis, as required in § 91.508, of the production line test results for each engine family;

(vi) Any other information the Administrator may request relevant to the determination whether the new engines being manufactured by the manufacturer do in fact conform with the regulations with respect to which the certificate of conformity was issued;

(7) For each failed engine as defined in § 91.510(a), a description of the remedy and test results for all retests as required by § 91.511(g);

(8) The date of the end of the engine manufacturer's model year production for each engine family; and

(9) The following signed statement and endorsement by an authorized representative of the manufacturer:

This report is submitted pursuant to sections 213 and 208 of the Clean Air Act. This production line testing program was conducted in complete conformance with all applicable regulations under 40 CFR part 91 *et seq*. No emission-related changes to production processes or quality control procedures for the engine family tested have been made during this production line testing program that affect engines from the production line. All data and information reported herein is, to the best of (Company Name) knowledge, true and accurate. I am aware of the penalties associated with violations of the Clean Air Act and the regulations thereunder. (Authorized Company Representative.)

§91.510 Compliance with criteria for production line testing.

(a) A failed engine is one whose final deteriorated test results pursuant to §91.509(c), for HC + NO_X exceeds the applicable Family Emission Limit (FEL).

(b) An engine family may be determined to be in noncompliance, if at any time throughout the model year, the CumSum statistic, C_i, for HC+NO_X, is greater than the action limit, H, for two consecutive tests.

§91.511 Suspension and revocation of certificates of conformity.

(a) The certificate of conformity is automatically suspended with respect to any engine failing pursuant to paragraph (a) of §91.510 effective from the time that testing of that engine is completed.

(b) The Administrator may suspend the certificate of conformity for an engine family which is determined to be in noncompliance pursuant to §90.510(b). This suspension will not occur before fifteen days after the engine family is determined to be in noncompliance.

(c) If the results of testing pursuant to these regulations indicate that engines of a particular family produced at one plant of a manufacturer do not conform to the regulations with respect to which the certificate of conformity was issued, the Administrator may suspend the certificate of conformity with respect to that family for engines manufactured by the manufacturer at all other plants.

(d) Notwithstanding the fact that engines described in the application for certification may be covered by a certificate of conformity, the Administrator may suspend such certificate immediately in whole or in part if the Administrator finds any one of the following infractions to be substantial:

(1) The manufacturer refuses to comply with any of the requirements of this subpart.

(2) The manufacturer submits false or incomplete information in any report or information provided to the Administrator under this subpart.

(3) The manufacturer renders inaccurate any test data submitted under this subpart.

(4) An EPA enforcement officer is denied the opportunity to conduct activities authorized in this subpart and a warrant or court order is presented to the manufacturer or the party in charge of the facility in question.

(5) An EPA enforcement officer is unable to conduct activities authorized in §91.505 because a manufacturer has located its facility in a foreign jurisdiction where local law prohibits those activities.

(e) The Administrator shall notify the manufacturer in writing of any suspension or revocation of a certificate of conformity in whole or in part. A suspension or revocation is effective upon receipt of the notification or fifteen days from the time an engine family is determined to be in noncompliance pursuant to §91.510(b), whichever is later, except that the certificate is immediately suspended with respect to any failed engines as provided for in paragraph (a) of this section.

(f) The Administrator may revoke a certificate of conformity for an engine family after the certificate has been suspended pursuant to paragraph (b) or (c) of this section if the proposed remedy for the nonconformity, as reported by the manufacturer to the Administrator, is one requiring a design change or changes to the engine and/or emission control system as described in the application for certification of the affected engine family.

(g) Once a certificate has been suspended for a failed engine, as provided for in paragraph (a) of this section, the manufacturer must take the following actions before the certificate is reinstated for that failed engine:

(1) Remedy the nonconformity;

(2) Demonstrate that the engine conforms to the Family Emission Limit by retesting the engine in accordance with these regulations; and

(3) Submit a written report to the Administrator, after successful completion of testing on the failed engine, which contains a description of the remedy and test results for each engine in addition to other information that may be required by this part.

(h) Once a certificate for a failed engine family has been suspended pursuant to paragraph (b), (c) or (d) of this section, the manufacturer must take the following actions before the Administrator will consider reinstating the certificate:

(1) Submit a written report to the Administrator which identifies the reason for the noncompliance of the engines, describes the proposed remedy, including a description of any proposed quality control and/or quality assurance measures to be taken by the manufacturer to prevent future occurrences of the problem, and states the date on which the remedies will be implemented.

(2) Demonstrate that the engine family for which the certificate of conformity has been suspended does in fact comply with the regulations of this part by testing as many engines as needed so that the CumSum statistic, as calculated in § 91.508(a), falls below the action limit. Such testing must comply with the provisions of this part. If the manufacturer elects to continue testing individual engines after suspension of a certificate, the certificate is reinstated for any engine actually determined to be in conformance with the Family Emission Limits through testing in accordance with the applicable test procedures, provided that the Administrator has not revoked the certificate pursuant to paragraph (f) of this section.

(i) Once the certificate has been revoked for an engine family, if the manufacturer desires to continue introduction into commerce of a modified version of that family, the following actions must be taken before the Administrator may issue a certificate for that modified family:

(1) If the Administrator determines that the proposed change(s) in engine design may have an effect on emission performance deterioration, the Administrator shall notify the manufacturer, within five working days after receipt of the report in paragraph (h)(1) of this section, whether subsequent testing under this subpart will be sufficient to evaluate the proposed change or changes or whether additional testing will be required; and

(2) After implementing the change or changes intended to remedy the nonconformity, the manufacturer must demonstrate that the modified engine family does in fact conform with the regulations of this part by testing as many engines as needed from the modified engine family so that the CumSum statistic, as calculated in § 91.508(a) using the newly assigned FEL if applicable, falls below the action limit. When both of these requirements are met, the Administrator shall reissue the certificate or issue a new certificate, as the case may be, to include that family. As long as the CumSum statistic remains above the action limit, the revocation remains in effect.

(j) At any time subsequent to a suspension of a certificate of conformity for a test engine pursuant to paragraph (a) of this section, but not later than 15 days (or such other period as may be allowed by the Administrator) after notification of the Administrator's decision to suspend or revoke a certificate of conformity in whole or in part pursuant to paragraphs (b), (c), or (f) of this section, a manufacturer may request a hearing as to whether the tests have been properly conducted or any sampling methods have been properly applied.

(k) Any suspension of a certificate of conformity under paragraph (d) of this section:

(1) Shall be made only after the manufacturer concerned has been offered an opportunity for a hearing conducted in accordance with §§ 91.512, 91.513, and 91.514 and

(2) Need not apply to engines no longer in the possession of the manufacturer.

(l) After the Administrator suspends or revokes a certificate of conformity pursuant to this section and prior to the commencement of a hearing under

§91.512, if the manufacturer demonstrates to the Administrator's satisfaction that the decision to suspend or revoke the certificate was based on erroneous information, the Administrator shall reinstate the certificate.

(m) To permit a manufacturer to avoid storing non-test engines while conducting subsequent testing of the noncomplying family, a manufacturer may request that the Administrator conditionally reinstate the certificate for that family. The Administrator may reinstate the certificate subject to the following condition: the manufacturer must commit to recall all engines of that family produced from the time the certificate is conditionally reinstated if the CumSum statistic does not fall below the action limit and must commit to remedy any nonconformity at no expense to the owner.

§91.512 Request for public hearing.

(a) If the manufacturer disagrees with the Administrator's decision to suspend or revoke a certificate or disputes the basis for an automatic suspension pursuant to §91.511(a), the manufacturer may request a public hearing.

(b) The manufacturer's request shall be filed with the Administrator not later than 15 days after the Administrator's notification of his or her decision to suspend or revoke, unless otherwise specified by the Administrator. The manufacturer shall simultaneously serve two copies of this request upon the Manager of the Engine Compliance Programs Group and file two copies with the Hearing Clerk for the Agency. Failure of the manufacturer to request a hearing within the time provided constitutes a waiver of the right to a hearing. Subsequent to the expiration of the period for requesting a hearing as of right, the Administrator may, in his or her discretion and for good cause shown, grant the manufacturer a hearing to contest the suspension or revocation.

(c) A manufacturer shall include in the request for a public hearing:

(1) A statement as to which engine configuration(s) within a family is to be the subject of the hearing;

(2) A concise statement of the issues to be raised by the manufacturer at the hearing, except that in the case of the hearing requested under §91.511(j), the hearing is restricted to the following issues:

(i) Whether tests have been properly conducted (specifically, whether the tests were conducted in accordance with applicable regulations under this part and whether test equipment was properly calibrated and functioning);

(ii) Whether sampling plans and statistical analyses have been properly applied (specifically, whether sampling procedures and statistical analyses specified in this subpart were followed and whether there exists a basis for distinguishing engines produced at plants other than the one from which engines were selected for testing which would invalidate the Administrator's decision under §91.511(c));

(3) A statement specifying reasons why the manufacturer believes it will prevail on the merits of each of the issues raised; and

(4) A summary of the evidence which supports the manufacturer's position on each of the issues raised.

(d) A copy of all requests for public hearings will be kept on file in the Office of the Hearing Clerk and will be made available to the public during Agency business hours.

§91.513 Administrative procedures for public hearing.

(a) The Presiding Officer shall be an Administrative Law Judge appointed pursuant to 5 U.S.C. 3105 (see also 5 CFR part 930 as amended).

(b) The Judicial Officer shall be an officer or employee of the Agency appointed as a Judicial Officer by the Administrator, pursuant to this section, who shall meet the qualifications and perform functions as follows:

(1) *Qualifications.* A Judicial Officer may be a permanent or temporary employee of the Agency who performs other duties for the Agency. The Judicial Officer shall not be employed by the Office of Enforcement and Compliance Assurance or have any connection with the preparation or presentation of evidence for a hearing held pursuant to this subpart. The Judicial Officer shall be a graduate of an accredited law school and a member in good standing

of a recognized Bar Association of any state or the District of Columbia.

(2) *Functions.* The Administrator may consult with the Judicial Officer or delegate all or part of the Administrator's authority to act in a given case under this section to a Judicial Officer, provided that this delegation does not preclude the Judicial Officer from referring any motion or case to the Administrator when the Judicial Officer determines such referral to be appropriate.

(c) For the purposes of this section, one or more Judicial Officers may be designated by the Administrator. As work requires, a Judicial Officer may be designated to act for the purposes of a particular case.

(d) Summary decision. (1) In the case of a hearing requested under § 91.511(j), when it clearly appears from the data and other information contained in the request for a hearing that no genuine and substantial question of fact or law exists with respect to the issues specified in § 91.512(c)(2), the Administrator may enter an order denying the request for a hearing and reaffirming the original decision to suspend or revoke a certificate of conformity.

(2) In the case of a hearing requested under § 91.512 to challenge a suspension of a certificate of conformity for the reason(s) specified in § 91.511(d), when it clearly appears from the data and other information contained in the request for the hearing that no genuine and substantial question of fact or law exists with respect to the issue of whether the refusal to comply with this subpart was caused by conditions and circumstances outside the control of the manufacturer, the Administrator may enter an order denying the request for a hearing and suspending the certificate of conformity.

(3) Any order issued under paragraph (d)(1) or (d)(2) of this section has the force and effect of a final decision of the Administrator, as issued pursuant to § 91.515.

(4) If the Administrator determines that a genuine and substantial question of fact or law does exist with respect to any of the issues referred to in paragraphs (d)(1) and (d)(2) of this section, the Administrator shall grant the request for a hearing and publish a notice of public hearing in the FEDERAL REGISTER or by such other means as the Administrator finds appropriate to provide notice to the public.

(e) Filing and service. (1) An original and two copies of all documents or papers required or permitted to be filed pursuant to this section and § 91.512(c) must be filed with the Hearing Clerk of the Agency. Filing is considered timely if mailed, as determined by the postmark, to the Hearing Clerk within the time allowed by this section and § 91.512(b). If filing is to be accomplished by mailing, the documents must be sent to the address set forth in the notice of public hearing referred to in paragraph (d)(4) of this section.

(2) To the maximum extent possible, testimony will be presented in written form. Copies of written testimony will be served upon all parties as soon as practicable prior to the start of the hearing. A certificate of service will be provided on or accompany each document or paper filed with the Hearing Clerk. Documents to be served upon the Manager of the Engine Compliance Programs Group must be sent by registered mail to: Manager, Engine Compliance Programs Group 6403–J, U.S. Environmental Protection Agency, 1200 Pennsylvania Ave., NW., Washington, DC 20460. Service by registered mail is complete upon mailing.

(f) Computation of time. (1) In computing any period of time prescribed or allowed by this section, except as otherwise provided, the day of the act or event from which the designated period of time begins to run is not included. Saturdays, Sundays, and federal legal holidays are included in computing the period allowed for the filing of any document or paper, except that when the period expires on a Saturday, Sunday, or federal legal holiday, the period is extended to include the next following business day.

(2) A prescribed period of time within which a party is required or permitted to do an act is computed from the time of service, except that when service is accomplished by mail, three days will be added to the prescribed period.

(g) Consolidation. The Administrator or the Presiding Officer in his or her discretion may consolidate two or more proceedings to be held under this

section for the purpose of resolving one or more issues whenever it appears that consolidation will expedite or simplify consideration of these issues. Consolidation does not affect the right of any party to raise issues that could have been raised if consolidation had not occurred.

(h) Hearing date. To the extent possible hearings under §91.512 will be scheduled to commence within 14 days of receipt of the request for a hearing.

§91.514 Hearing procedures.

The procedures provided in §86.1014–84(i) to (s) apply for hearings requested pursuant to §91.512 regarding suspension, revocation, or voiding of a certificate of conformity.

§91.515 Appeal of hearing decision.

The procedures provided in §86.1014–84(t) to (aa) apply for appeals filed with respect to hearings held pursuant to §91.514.

§91.516 Treatment of confidential information.

Except for information required by §91.509(e)(2) and §91.509 (e)(6)(vi), information submitted to EPA pursuant to §91.509(e) shall be made available to the public upon request by EPA notwithstanding any claim of confidentiality made by the submitter. The provisions for treatment of confidential information described in §91.7 apply to the information required by §91.509(e)(2) and all other information submitted pursuant to this subpart.

Subpart G—Selective Enforcement Auditing Regulations

§91.601 Applicability.

The requirements of subpart G are applicable to all marine SI engines subject to the provisions of subpart A of part 91.

§91.602 Definitions.

The definitions in subpart A and subpart F of this part apply to this subpart. The following definitions also apply to this subpart.

Acceptable quality level (AQL) means the maximum percentage of failing engines that can be considered a satisfactory process average for sampling inspections.

Inspection criteria means the pass and fail numbers associated with a particular sampling plan.

§91.603 Applicability of part 91, subpart F.

(a) For purposes of selective enforcement audits conducted under this subpart, marine SI engines subject to provisions of subpart B of this part are subject to regulations specified in subpart F of this part, except:

(1) Section 91.501 does not apply.

(2) Section 91.503 does not apply. See §91.605.

(3) Section 91.506 does not apply. See §91.606.

(4) Section 91.507 does not apply. See §91.607.

(5) Section 91.508 does not apply.

(6) Paragraphs (d) and (e)(6)(v) and references to ''sample sizes, N and n'' of §91.509 do not apply.

(7) The introductory text in §91.509 does not apply. The following text applies:

''Within 5 working days after completion of testing of all engines pursuant to a test order.''

(8) The introductory text of §91.509(e)(9) does not apply. The following text applies:

The following signed statement and endorsement by an authorized representative of the manufacturer:

This report is submitted pursuant to Sections 213 and 208 of the Clean Air Act. This Selective Enforcement Audit was conducted in complete conformance with all applicable regulations under 40 CFR Part 91 *et seq* and the conditions of the test order. No emission-related changes to production processes or quality control procedures for the engine family tested have been made between receipt of the test order and conclusion of the audit. All data and information reported herein is, to the best of (Company Name) knowledge, true and accurate. I am aware of the penalties associated with violations of the Clean Air Act and the regulations thereunder. (Authorized Company Representative.)

(9) Section 91.510 does not apply. See §91.608.

§ 91.604 Test orders.

(a) A test order addressed to the manufacturer is required for any testing under this subpart.

(b) The test order is signed by the Assistant Administrator for Air and Radiation or his or her designee. The test order must be delivered in person by an EPA enforcement officer or EPA authorized representative to a company representative or sent by registered mail, return receipt requested, to the manufacturer's representative who signed the application for certification submitted by the manufacturer, pursuant to the requirements of the applicable section of subpart B of this part. Upon receipt of a test order, the manufacturer must comply with all of the provisions of this subpart and instructions in the test order.

(c) *Information included in test order.* (1) The test order will specify the engine family to be selected for testing, the manufacturer's engine assembly plant or associated storage facility or port facility (for imported engines) from which the engines must be selected, the time and location at which engines must be selected, and the procedure by which engines of the specified family must be selected. The test order may specify the configuration to be audited and/or the number of engines to be selected per day. Engine manufacturers are required to select a minimum of four engines per day unless an alternate selection procedure is approved pursuant to § 91.606(a), or unless total production of the specified configuration is less than four engines per day. If total production of the specified configuration is less than four engines per day, the manufacturer selects the actual number of engines produced per day.

(2) The test order may include alternate families to be selected for testing at the Administrator's discretion in the event that engines of the specified family are not available for testing because those engines are not being manufactured during the specified time or are not being stored at the specified assembly plant, associated storage facilities, or port of entry.

(3) If the specified family is not being manufactured at a rate of at least two engines per day in the case of manufacturers specified in 40 CFR 89.607(g)(1), or one engine per day in the case of manufacturers specified in 40 CFR 89.607(g)(2), over the expected duration of the audit, the Assistant Administrator or her or his designated representative may select engines of the alternate family for testing.

(4) In addition, the test order may include other directions or information essential to the administration of the required testing.

(d) A manufacturer may submit a list of engine families and the corresponding assembly plants, associated storage facilities, or (in the case of imported engines) port facilities from which the manufacturer prefers to have engines selected for testing in response to a test order. In order that a manufacturer's preferred location be considered for inclusion in a test order for a particular engine family, the list must be submitted prior to issuance of the test order. Notwithstanding the fact that a manufacturer has submitted the list, the Administrator may order selection at other than a preferred location.

(e) Upon receipt of a test order, a manufacturer must proceed in accordance with the provisions of this subpart.

§ 91.605 Testing by the Administrator.

(a) The Administrator may require by test order under § 91.604 that engines of a specified family be selected in a manner consistent with the requirements of § 91.606 and submitted to the Administrator at the place designated for the purpose of conducting emission tests. These tests will be conducted in accordance with § 91.607 to determine whether engines manufactured by the manufacturer conform with the regulations with respect to which the certificate of conformity was issued.

(b) *Designating official data.* (1) Whenever the Administrator conducts a test on a test engine or the Administrator and manufacturer each conduct a test on the same test engine, the results of the Administrator's test comprise the official data for that engine.

(2) Whenever the manufacturer conducts all tests on a test engine, the manufacturer's test data is accepted as the official data, provided that if the

Administrator makes a determination based on testing conducted under paragraph (a) of this section that there is a substantial lack of agreement between the manufacturer's test results and the Administrator's test results, no manufacturer's test data from the manufacturer's test facility will be accepted for purposes of this subpart.

(c) If testing conducted under § 91.604 is unacceptable under paragraph (b)(2) of this section, the Administrator must:

(1) Notify the manufacturer in writing of the Administrator's determination that the test facility is inappropriate for conducting the tests required by this subpart and the reasons therefor; and

(2) Reinstate any manufacturer's data upon a showing by the manufacturer that the data acquired under § 91.604 was erroneous and the manufacturer's data was correct.

(d) The manufacturer may request in writing that the Administrator reconsider the determination in paragraph (b)(2) of this section based on data or information which indicates that changes have been made to the test facility and these changes have resolved the reasons for disqualification.

§ 91.606 Sample selection.

(a) Engines comprising a test sample will be selected at the location and in the manner specified in the test order. If a manufacturer determines that the test engines cannot be selected in the manner specified in the test order, an alternative selection procedure may be employed, provided the manufacturer requests approval of the alternative procedure prior to the start of test sample selection, and the Administrator approves the procedure.

(b) The manufacturer must produce and assemble the test engines of the family selected for testing using its normal production and assembly process for engines to be distributed into commerce. If, between the time the manufacturer is notified of a test order and the time the manufacturer finishes selecting test engines, the manufacturer implements any change(s) in its production or assembly processes, including quality control, which may reasonably be expected to affect the emissions of the engines selected, then the manufacturer must, during the audit, inform the Administrator of such changes. If the test engines are selected at a location where they do not have their operational and emission control systems installed, the test order will specify the manner and location for selection of components to complete assembly of the engines. The manufacturer must assemble these components onto the test engines using normal assembly and quality control procedures as documented by the manufacturer.

(c) No quality control, testing, or assembly procedures will be used on the test engine or any portion thereof, including parts and subassemblies, that have not been or will not be used during the production and assembly of all other engines of that family, unless the Administrator approves the modification in production or assembly procedures pursuant to paragraph (b) of this section.

(d) The test order may specify that an EPA enforcement officer(s) or authorized representative(s), rather than the manufacturer, select the test engines according to the method specified in the test order.

(e) The order in which test engines are selected determines the order in which test results are to be used in applying the sampling plan in accordance with § 91.608.

(f) The manufacturer must keep on hand all untested engines, if any, comprising the test sample until a pass or fail decision is reached in accordance with § 91.608(e). The manufacturer may ship any tested engine which has not failed the requirements as set forth in § 91.608(b). However, once the manufacturer ships any test engine, it relinquishes the prerogative to conduct retests as provided in § 91.607(i).

§ 91.607 Test procedures.

(a)(1) For marine SI engines subject to the provisions of this subpart, the prescribed test procedures are the test procedures as specified in subpart E of this part.

(2) The Administrator may, on the basis of a written application by a manufacturer, prescribe test procedures other than those specified in

paragraph (a)(1) of this section for any marine engine he or she determines is not susceptible to satisfactory testing using the procedures specified in paragraph (a)(1) of this section.

(b)(1) The manufacturer may not adjust, repair, prepare, or modify the engines selected for testing and may not perform any emission tests on engines selected for testing pursuant to the test order unless this adjustment, repair, preparation, modification, and/or tests are documented in the manufacturer's engine assembly and inspection procedures and are actually performed or unless these adjustments and/or tests are required or permitted under this subpart or are approved in advance by the Administrator.

(2) The Administrator may adjust or cause to be adjusted any engine parameter which the Administrator has determined to be subject to adjustment for certification and Selective Enforcement Audit testing in accordance with § 91.112, to any setting within the physically adjustable range of that parameter, as determined by the Administrator in accordance with § 91.112, prior to the performance of any tests. However, if the idle speed parameter is one which the Administrator has determined to be subject to adjustment, the Administrator may not adjust it to any setting which causes a lower engine idle speed than would have been possible within the physically adjustable range of the idle speed parameter if the manufacturer had accumulated 12 hours of service on the engine under paragraph (c) of this section, all other parameters being identically adjusted for the purpose of the comparison. The manufacturer may be requested to supply information needed to establish an alternate minimum idle speed. The Administrator, in making or specifying these adjustments, may consider the effect of the deviation from the manufacturer's recommended setting on emission performance characteristics as well as the likelihood that similar settings will occur on in-use engines. In determining likelihood, the Administrator may consider factors such as, but not limited to, the effect of the adjustment on engine performance characteristics and information from similar in-use engines.

(c) *Service accumulation*. Prior to performing exhaust emission testing on an SEA test engine, the manufacturer may accumulate on each engine a number of hours of service equal to the greater of 12 hours or the number of hours the manufacturer accumulated during certification on the emission data engine corresponding to the family specified in the test order.

(1) Service accumulation must be performed in a manner using good engineering judgment to obtain emission results representative of normal production engines. This service accumulation must be consistent with the new engine break-in instructions contained in the applicable owner's manual.

(2) The manufacturer must accumulate service at a minimum rate of 6 hours per engine during each 24-hour period, unless otherwise approved by the Administrator.

(i) The first 24-hour period for service begins as soon as authorized checks, inspections, and preparations are completed on each engine.

(ii) The minimum service accumulation rate does not apply on weekends or holidays.

(iii) If the manufacturer's service or target is less than the minimum rate specified (6 hours per day), then the minimum daily accumulation rate is equal to the manufacturer's service target.

(3) Service accumulation must be completed on a sufficient number of test engines during consecutive 24-hour periods to assure that the number of engines tested per day fulfills the requirements of paragraphs (g)(1) and (g)(2) of this section.

(d) The manufacturer may not perform any maintenance on test engines after selection for testing, nor may the Administrator allow deletion of any engine from the test sequence, unless requested by the manufacturer and approved by the Administrator before any engine maintenance or deletion.

(e) The manufacturer must expeditiously ship test engines from the point of selection to the test facility. If the test facility is not located at or in close proximity to the point of selection, the manufacturer must assure that test engines arrive at the test facility within 24 hours of selection. The

Administrator may approve more time for shipment based upon a request by the manufacturer accompanied by a satisfactory justification.

(f) If an engine cannot complete the service accumulation or an emission test because of a malfunction, the manufacturer may request that the Administrator authorize either the repair of that engine or its deletion from the test sequence.

(g) Whenever a manufacturer conducts testing pursuant to a test order issued under this subpart, the manufacturer must notify the Administrator within one working day of receipt of the test order as to which test facility will be used to comply with the test order. If no test cells are available at a desired facility, the manufacturer must provide alternate testing capability satisfactory to the Administrator.

(1) A manufacturer with projected nonroad engine sales for the United States market for the applicable year of 7,500 or greater must complete emission testing at a minimum rate of two engines per 24-hour period, including each voided test and each smoke test.

(2) A manufacturer with projected nonroad engine sales for the United States market for the applicable year of less than 7,500 must complete emission testing at a minimum rate of one engine per 24-hour period, including each voided test and each smoke test.

(3) The Administrator may approve a lower daily rate of emission testing based upon a request by a manufacturer accompanied by a satisfactory justification.

(h) The manufacturer must perform test engine selection, shipping, preparation, service accumulation, and testing in such a manner as to assure that the audit is performed in an expeditious manner.

(i) Retesting. (1) The manufacturer may retest any engines tested during a Selective Enforcement Audit once a fail decision for the audit has been reached in accordance with §91.608(e).

(2) The Administrator may approve retesting at other times based upon a request by the manufacturer accompanied by a satisfactory justification.

(3) The manufacturer may retest each engine a total of three times. The manufacturer must test each engine or vehicle the same number of times. The manufacturer may accumulate additional service before conducting a retest, subject to the provisions of paragraph (c) of this section.

(j) A manufacturer must test engines with the test procedure specified in subpart E of this part to demonstrate compliance with the exhaust emission standard (or applicable FEL) for $HC+NO_X$. If alternate procedures were used in certification pursuant to §91.119, then those alternate procedures must be used.

§91.608 Compliance with acceptable quality level and passing and failing criteria for selective enforcement audits.

(a) The prescribed acceptable quality level is 40 percent.

(b) A failed engine is one whose final test results pursuant to §91.509(b), for $HC+NO_X$, exceed the applicable family emission level.

(c) The manufacturer must test engines comprising the test sample until a pass decision is reached for $HC+NO_X$ or a fail decision is reached for $HC+NO_X$. A pass decision is reached when the cumulative number of failed engines, as defined in paragraph (b) of this section, for $HC+NO_X$ is less than or equal to the pass decision number, as defined in paragraph (d) of this section, appropriate to the cumulative number of engines tested. A fail decision is reached when the cumulative number of failed engines for $HC+NO_X$ is greater than or equal to the fail decision number, as defined in paragraph (d) of this section, appropriate to the cumulative number of engines tested.

(d) The pass and fail decision numbers associated with the cumulative number of engines tested are determined by using the tables in Appendix A to this subpart, ''Sampling Plans for Selective Enforcement Auditing of Marine Engines,'' appropriate to the projected sales as made by the manufacturer in its report to EPA under §91.504(c)(1). In the tables in Appendix A to this subpart, sampling plan ''stage'' refers to the cumulative number of engines tested. Once a pass or fail decision has been made for $HC+NO_X$, the number of engines with

final test results exceeding the emission standard for $HC+NO_X$ shall not be considered any further for the purposes of the audit.

(e) Passing or failing of an SEA occurs when the decision is made on the last engine required to make a decision under paragraph (c) of this section.

(f) The Administrator may terminate testing earlier than required in paragraph (c) of this section.

APPENDIX A TO SUBPART G OF PART 91—SAMPLING PLANS FOR SELECTIVE ENFORCEMENT AUDITING OF MARINE ENGINES

TABLE 1—SAMPLING PLAN CODE LETTER

Annual engine family sales	Code letter
20–50	AA.[1]
120–99	A.
100–299	B.
300–299	C.
500 or greater	D.

[1] A manufacturer may optionally use either the sampling plan for code letter ''AA'' or sampling plan for code letter ''A'' for Selective Enforcement Audits of engine families with annual sales between 20 and 50 engines. Additionally, the manufacturer may switch between these plans during the audit.

TABLE 2—SAMPLING PLAN FOR CODE LETTER ''AA''

[Sample inspection criteria]

Stage	Pass No.	Fail No.	Stage	Pass No.	Fail No.
1	(1)	(2)	11	4	8
2	(1)	(2)	12	4	9
3	0	(2)	13	5	9
4	0	(2)	14	5	10
5	1	5	15	6	10
6	1	6	16	6	10
7	2	6	17	7	10
8	2	7	18	8	10
9	3	7	19	8	10
10	3	8	20	9	10

[1] Test sample passing not permitted at this stage.
[2] Test sample failure not permitted at this stage.

TABLE 3—SAMPLING PLAN FOR CODE LETTER ''A''

[Sample inspection criteria]

Stage	Pass No.	Fail No.	Stage	Pass No.	Fail No.
1	(1)	(2)	16	6	11
2	(1)	(2)	17	7	12
3	(1)	(2)	18	7	12
4	0	(2)	19	8	13
5	0	(2)	20	8	13
6	1	6	21	9	14
7	1	7	22	10	14
8	2	7	23	10	15
9	2	8	24	11	15
10	3	8	25	11	16
11	3	8	26	12	16

TABLE 3—SAMPLING PLAN FOR CODE LETTER ''A''—Continued

[Sample inspection criteria]

Stage	Pass No.	Fail No.	Stage	Pass No.	Fail No.
12	4	9	27	12	17
13	5	10	28	13	17
14	5	10	29	14	17
15	6	11	30	16	17

[1] Test sample passing not permitted at this stage.
[2] Test sample failure not permitted at this stage.

TABLE 4—SAMPLING PLAN FOR CODE LETTER ''B''

[Sample inspection criteria]

Stage	Pass No.	Fail No.
1	(1)	(2)
2	(1)	(2)
3	(1)	(2)
4	(1)	(2)
5	0	(2)
6	1	6
7	1	7
8	2	7
9	2	8
10	3	8
11	3	9
12	4	9
13	4	10
14	5	10
15	5	11
16	6	12
17	6	12
18	7	13
19	8	13
20	8	14
21	9	14
22	9	15
23	10	15
24	10	16
25	11	16
26	11	17
27	12	17
28	12	18
29	13	18
30	13	19
31	14	19
32	14	20
33	15	20
34	16	21
35	16	21
36	17	22
37	17	22
38	18	22
39	18	22
40	21	22

[1] Test sample passing not permitted at this stage.
[2] Test sample failure not permitted at this stage.

TABLE 5—SAMPLING PLAN FOR CODE LETTER ''C''

[Sample inspection criteria]

Stage	Pass No.	Fail No.
1	(1)	(2)
2	(1)	(2)
3	(1)	(2)
4	(1)	(2)

TABLE 5—SAMPLING PLAN FOR CODE LETTER "C"—Continued

[Sample inspection criteria]

Stage	Pass No.	Fail No.
5	0	(2)
6	0	6
7	1	7
8	2	7
9	2	8
10	3	9
11	3	9
12	4	10
13	4	10
14	5	11
15	5	11
16	6	12
17	6	12
18	7	13
19	7	13
20	8	14
21	8	14
22	9	15
23	10	15
24	10	16
25	11	16
26	11	17
27	12	17
28	12	18
29	13	18
30	13	19
31	14	19
32	14	20
33	15	20
34	15	21
35	16	21
36	16	22
37	17	22
38	18	23
39	18	23
40	19	24
41	19	24
42	20	25
43	20	25
44	21	26
45	21	27
46	22	27
47	22	27
48	23	27
49	23	27
50	26	27

[1] Test sample passing not permitted at this stage.
[2] Test sample failure not permitted at this stage.

TABLE 6—SAMPLING PLAN FOR CODE LETTER "D"

[Sample inspection criteria]

Stage	Pass No.	Fail No.
1	(1)	(2)
2	(1)	(2)
3	(1)	(2)
4	(1)	(2)
5	0	(2)
6	0	6
7	1	7
8	2	8
9	2	8
10	3	9
11	3	9
12	4	10
13	4	10

TABLE 6—SAMPLING PLAN FOR CODE LETTER "D"—Continued

[Sample inspection criteria]

Stage	Pass No.	Fail No.
14	5	11
15	5	11
16	6	12
17	6	12
18	7	13
19	7	13
20	8	14
21	8	14
22	9	15
23	9	15
24	10	16
25	11	16
26	11	17
27	12	17
28	12	18
29	13	19
30	13	19
31	14	20
32	14	20
33	15	21
34	15	21
35	16	22
36	16	22
37	17	23
38	17	23
39	18	24
40	18	24
41	19	25
42	19	26
43	20	26
44	21	27
45	21	27
46	22	28
47	22	28
48	23	29
49	23	29
50	24	30
51	24	30
52	25	31
53	25	31
54	26	32
55	26	32
56	27	33
57	27	33
58	28	33
59	28	33
60	32	33

[1] Test sample passing not permitted at this stage.
[2] Test sample failure not permitted at this stage.

Subpart H—Importation of Nonconforming Marine Engines

§91.701 Applicability.

(a) Except where otherwise indicated, this subpart is applicable to marine SI engines for which the Administrator has promulgated regulations under this part prescribing emission standards, including engines incorporated into marine vessels or equipment, that are offered for importation or imported into the United States, but which engines, at the time of importation or

being offered for importation are not covered by certificates of conformity issued under section 213 and section 206(a) of the Clean Air Act as amended (that is, which are nonconforming marine engines as defined in § 91.702), and this part. Compliance with regulations under this subpart does not relieve any person or entity from compliance with other applicable provisions of the Clean Air Act.

(b) Regulations prescribing further procedures for the importation of marine SI engines and marine vessels or equipment into the customs territory of the United States, as defined in 19 U.S.C. 1202, are set forth in U.S. Customs Service regulations.

§ 91.702 Definitions.

The definitions in subpart A of this part apply to this subpart. The following definitions also apply to this subpart.

Certificate of conformity. The document issued by the Administrator under section 213 and section 206(a) of the Act.

Nonconforming marine engine. A marine SI engine which is not covered by a certificate of conformity prior to importation or being offered for importation (or for which such coverage has not been adequately demonstrated to EPA). Also, a marine SI engine which was originally covered by a certificate of conformity, but subsequently altered or modified such that it is no longer in a certified configuration.

Original engine manufacturer (OEM). The entity which originally manufactured the marine engine.

United States. United States includes the customs territory of the United States as defined in 19 U.S.C. 1202, and the Virgin Islands, Guam, American Samoa, and the Commonwealth of the Northern Mariana Islands.

§ 91.703 Admission.

(a) A nonconforming marine SI engine offered for importation may only be imported into the United States under § 91.704, provided that an exemption or exclusion is granted by the Administrator. Final admission shall not be granted unless the marine SI engine is exempted or excluded under § 91.704.

(b) In order to obtain admission the importer must submit to the Administrator a written request for approval containing the following:

(1) Identification of the importer of the marine SI engine and the importer's address, telephone number, and taxpayer identification number;

(2) Identification of the marine SI engine owner, the owner's address, telephone number, and taxpayer identification number;

(3) Identification of the marine SI engine including make, model, identification number, and original production year;

(4) Information indicating under what provision of these regulations the marine SI engine is to be imported;

(5) Identification of the place(s) where the subject marine SI engine is to be stored;

(6) Authorization for EPA enforcement officers to conduct inspections or testing otherwise permitted by the Act or regulations thereunder; and

(7) Such other information as is deemed necessary by the Administrator.

§ 91.704 Exemptions and exclusions.

(a) Individuals and businesses are eligible to import nonconforming marine SI engines into the United States only under the provisions of this section.

(b) Notwithstanding other requirements of this subpart, a nonconforming marine SI engine entitled to one of the temporary exemptions of this paragraph may be conditionally admitted into the United States if prior written approval for the conditional admission is obtained from the Administrator. Conditional admission must be under bond. The Administrator may request that the U.S. Customs Service require a specific bond amount to ensure compliance with the requirements of the Act and this subpart. A written request for approval from the Administrator must contain the identification required in § 91.703(b) and information that demonstrates that the importer is entitled to the exemption. Noncompliance with provisions of this section may result in the forfeiture of the total amount of the bond or exportation of

the marine engine. The following temporary exemptions are permitted by this paragraph:

(1) *Exemption for repairs or alterations.* Upon written approval by EPA, a person may conditionally import under bond a nonconforming marine SI engine solely for purpose of repair(s) or alteration(s). The marine SI engines may not be operated in the United States other than for the sole purpose of repair or alteration. It may not be sold or leased in the United States and must be exported upon completion of the repair(s) or alteration(s).

(2) *Testing exemption.* A nonconforming test marine SI engine may be conditionally imported under bond by a person subject to the requirements of §91.1005. A test marine SI engine may be operated in the United States provided that the operation is an integral part of the test. This exemption is limited to a period not exceeding one year from the date of importation unless a request is made by the appropriate importer, and subsequently granted by EPA, concerning the marine engine in accordance with §91.1005(f) for a subsequent one-year period.

(3) *Display exemptions.* (i) A nonconforming marine engine intended solely for display may be conditionally imported under bond subject to the requirements of §91.1007.

(ii) A display marine engine may be imported by any person for purposes related to a business or the public interest. Such purposes do not include collections normally inaccessible or unavailable to the public on a daily basis, display of a marine engine at a dealership, private use, or other purpose that the Administrator determines is not appropriate for display exemptions. A display marine engine may not be sold or leased in the United States and may not be operated in the United States except for the operation incident and necessary to the display purpose.

(iii) A temporary display exemption is granted for 12 months or for the duration of the display purpose, whichever is shorter. Extensions of up to 12 months each are available upon approval by the Administrator. In no circumstances, however, may the total period of exemption exceed 36 months.

(c) Notwithstanding any other requirement of this subpart, a marine SI engine may be finally admitted into the United States under this paragraph if prior written approval for such final admission is obtained from the Administrator. A request for approval is to contain the identification information required in §91.703(b) (except for §91.703(b)(5)) and information that demonstrates that the importer is entitled to the exemption. The following exemptions are permitted by this paragraph:

(1) *National security exemption.* A nonconforming marine engine may be imported under the national security exemption found at §91.1008.

(2) *Exemption for marine engines identical to United States certified versions.* (i) Any person (including businesses) is eligible for importing a nonconforming marine SI engine into the United States under the provisions of this paragraph. An exemption will be granted if the applicant demonstrates to the satisfaction of the Administrator that the marine engine:

(A) Is owned by the importer;

(B) Is not offered for importation for the purpose of resale; and

(C) Is proven to be identical, in all material respects, to a marine SI engine of the same or later model year certified by the Original Engine Manufacturer for sale in the United States or is proven to have been modified to be identical, in all material respects, to a marine engine of the same or later model year certified by the OEM for sale in the United States according to complete written instructions provided by the OEM's United States representative, or his/her designee.

(ii) Proof of conformity.

(A) Documentation submitted pursuant to this section for the purpose of proving conformity of individual marine engines is to contain sufficiently organized data or evidence demonstrating that the marine engine identified pursuant to §91.703(b) is identical, in all material respects, to a marine engine identified in an OEM's application for certification.

(B) If the documentation does not contain all the information required by this part, or is not sufficiently organized, EPA will notify the importer of

any areas of inadequacy and that the documentation will not receive further consideration until the required information or organization is provided.

(C) If EPA determines that the documentation does not clearly or sufficiently demonstrate that a marine engine is eligible for importation under this paragraph, EPA will notify the importer in writing.

(D) If EPA determines that the documentation clearly and sufficiently demonstrates that a marine engine is eligible for importation under this paragraph, EPA will grant approval for final admission in writing.

(d) Foreign diplomatic and military personnel may conditionally import a nonconforming marine engine without bond. At the time of conditional admission, the importer must submit to the Administrator the written report required in § 91.703(b) (except for information required by § 91.703(b)(5)) and a statement from the U.S. Department of State confirming qualification for this exemption. Foreign military personnel may, in lieu of a statement from the U.S. Department of State, submit to the Administrator a copy of their orders for duty in the United States. The marine SI engine may not be sold or leased in the United States and must be exported if the individual's diplomatic status or the foreign military orders for duty in the U.S. are no longer applicable, as determined by the Department of State, unless subsequently brought into conformity with U.S. emission requirements in accordance with § 91.704(c)(2).

(e) Competition exclusion. A nonconforming marine engine may be conditionally imported by any person provided the importer demonstrates to the Administrator that the marine engine is used to propel a marine vessel used solely for competition and obtains prior written approval from the Administrator. A nonconforming engine imported pursuant to this paragraph may not be operated in the United States except for that operation incident and necessary for the competition purpose, unless subsequently brought into conformity with United States emission requirements in accordance with § 91.704(c)(2).

(f) An application for exemption and exclusion provided for in paragraphs (b), (c), and (e) of this section shall be mailed to: U.S. Environmental Protection Agency, Office of Mobile Sources, Engine Programs & Compliance Division (6403–J), 1200 Pennsylvania Ave., NW., Washington, DC 20460, Attention: Imports.

§ 91.705 Prohibited acts; penalties.

(a) The importation of a marine SI engine, including a marine engine incorporated into marine vessels or equipment, which is not covered by a certificate of conformity other than in accordance with this subpart and the entry regulations of the U.S. Customs Service is prohibited. Failure to comply with this section is a violation of § 91.1103(a)(1) and section 213(d) of the Act.

(b) Unless otherwise permitted by this subpart, during a period of conditional admission, the importer of a marine engine may not:

(1) Register, license, or operate the marine engine in the United States;

(2) Sell or lease or offer the marine engine for sale or lease;

(c) A marine SI engine conditionally admitted pursuant to § 91.704 (b), (d) or (e) and not granted final admission by the end of the period of conditional admission, or within such additional time as the Administrator and the U.S. Customs Service may allow, is deemed to be unlawfully imported into the United States in violation of § 91.1103(a)(1), section 213(d) and section 203 of the Act, unless the marine engine has been delivered to the U.S. Customs Service for export or other disposition under applicable Customs laws and regulations. A marine SI engine not so delivered is subject to seizure by the U.S. Customs Service.

(d) An importer who violates § 91.1103(a)(1), section 213(d) and section 203 of the Act is subject to a civil penalty under § 91.1106 and section 205 of the Act of not more than $25,000 for each marine engine subject to the violation. In addition to the penalty provided in the Act, where applicable, a person or entity who imports an engine under the exemption provisions of § 91.704(b) and, who fails to deliver the marine engine to the U.S. Customs

Service by the end of the period of conditional admission is liable for liquidated damages in the amount of the bond required by applicable Customs laws and regulations.

§91.706 Treatment of confidential information.

The provisions for treatment of confidential information as described in §91.7 apply.

Subpart I—In-Use Testing and Recall Regulations

§91.801 Applicability.

The requirements of subpart I are applicable to all marine SI engines subject to the provisions of subpart A of part 91.

(a) Marine engines subject to provisions of subpart B of this part are subject to recall regulations specified in 40 CFR part 85, subpart S, except for the items set forth in this subsection.

(b) Reference to section 214 of the Clean Air Act in 40 CFR 85.1801(a) does not apply. Reference to section 216 of the Clean Air Act does apply.

(c) Reference to section 202 of the Act in 40 CFR 85.1802(a) does not apply. Reference to section 213 of the Act does apply.

(d) Reference to ''family particulate emission limits as defined in Part 86 promulgated under section 202 of the Act'' in 40 CFR 85.1803(a) and 85.1805(a)(1) does not apply. Family emission limits as defined in 40 CFR part 89 promulgated under section 213 of the Act does apply.

(e) Add the following paragraph to 40 CFR 85.1805 (a)(9): A telephone number provided by the manufacturer, which may be used to report difficulty in obtaining recall repairs.

(f) The requirements of the Manufacturer In-use testing program set forth in §§91.803 through 91.805 are waived for existing technology OB/PWC as defined in §91.3 through model year 2003.

(1) The Administrator has the discretion to waive the requirements of the Manufacturer In-use testing program set forth in sections 91.803 through 91.805 for existing technology OB/PWC for a specific engine family up to model year 2005 if, upon the request of the manufacturer, the Administrator determines that the engine family will be phased out of U.S. production by model year 2005. As a condition to receiving such a waiver for either model year 2004 or 2005 or both, the manufacturer must discontinue U.S. production according to the schedule upon which the Administrator based the waiver. Failure to do so by the manufacturer will void *ab initio* the certificate of conformity.

(2) A manufacturer request under paragraph (f)(1) of this section must be in writing and must apply to a specific engine family. The request must identify the engine family designation, the schedule for phasing the engine family out of U.S. production, and any other information the Administrator may require.

§91.802 Definitions.

(a) For the purposes of this subpart, except as otherwise provided, the definitions in subpart A of this part apply to this subpart.

(b) The definitions of 40 CFR Part 85, subpart S, §85.1801 also apply to this Part.

§91.803 Manufacturer in-use testing program.

(a) EPA shall annually identify engine families and those configurations within families which the manufacturer must then subject to in-use testing as described below. For each model year, EPA may identify a number of engine families that is no greater than twenty-five percent of the number of engine families to which this subpart is applicable produced in that model year.

(b) For each engine family identified by EPA, engine manufacturers shall perform emission testing of an appropriate sample of in-use engines from each engine family. Manufacturers shall submit data from this in-use testing to EPA.

(c) *Number of engines to be tested.* An engine manufacturer shall test in-use engines from each engine family identified by EPA. Engines to be tested shall have accumulated between half and three-quarters of the family's useful life. The number of engines to be tested by a manufacturer will be determined by the following method:

(1) A minimum of four (4) engines per family provided that no engine fails any standard. For each failing engine, two more engines shall be tested until the total number of engines equals ten (10).

(2) For engine families of less than 500 engines for the identified model year or for engine manufacturers who make less than or equal to 2,000 for that model year, a minimum of two (2) engines per family provided that no engine fails any standard. For each failing engine, two more engines shall be tested until the total number of engines equals ten (10).

(3) If an engine family was certified using carry over emission data and has been previously tested under paragraph (c) (1) or (2) of this section (and EPA has not ordered a recall for that family), then only one engine for that family must be tested. If that one engine fails any pollutant, testing must be conducted as outlined at paragraph (c) (1) or (2) of this section, whichever is appropriate.

(d) At the discretion of the Administrator, an engine manufacturer may test more engines than the minima described in paragraph (c) of this section or may concede failure before testing a total of ten (10) engines.

(e) The Administrator will consider failure rates, average emission levels and the existence of any defects among other factors in determining whether to pursue remedial action under this subpart. The Administrator may order a recall pursuant to §§ 91.807–91.814 before testing reaches the tenth engine.

(f) The Administrator may approve an alternative to manufacturer in-use testing, where:

(1) Engine family production is less than or equal to 200 per year; or

(2) Engines cannot be obtained for testing because they are used substantially in craft which are not conducive to engine removal such as large vessels where the engine can not be removed without dismantling either the engine or the vessel; or

(3) Other compelling circumstances associated with the structure of the industry and uniqueness of marine engine applications. Such alternatives shall be designed to determine whether the engine family is in compliance in-use.

(g) *Collection of in-use engines.* The engine manufacturer shall procure in-use engines which have been operated for between half and three-quarters of the engine's useful life. The engine manufacturer may test engines from more than one model year in a given year. The manufacturer shall begin testing within twelve calendar months after receiving notice that EPA has identified a particular engine family for testing and shall complete testing of such engine family within twelve calendar months from the start of such testing. Test engines may be procured from sources associated with the engine manufacturer (i.e., manufacturer established fleet engines, etc.) or from sources not associated with the manufacturer (i.e., consumer-owned engines, independently-owned fleet engines, etc.).

§ 91.804 Maintenance, procurement and testing of in-use engines.

(a) A test engine must have a maintenance and use history representative of actual in-use conditions.

(1) To comply with this requirement a manufacturer must obtain information from the end users regarding the accumulated usage, maintenance, operating conditions, and storage of the test engines.

(2) Documents used in the procurement process must be maintained as required in § 91.121.

(b) The manufacturer may perform minimal set-to-spec maintenance on components of a test engine that are not subject to parameter adjustment. Maintenance may include only that which is listed in the owner's instructions for engines with the amount of service and age of the acquired test engine. Documentation of all maintenance and adjustments shall be maintained and retained as required by § 91.121.

(c) At least one valid emission test, according to the test procedure outlined in subpart E of this part, is required for each in-use engine.

(d) The Administrator may waive portions or requirements of the test procedure, if any, that are not necessary to determine in-use compliance.

(e) If a selected in-use engine fails to comply with any applicable emission standards, the manufacturer shall determine the reason for noncompliance. The manufacturer must report all such reasons of noncompliance within fifteen days of completion of testing.

§ 91.805 In-use test program reporting requirements.

(a) The manufacturer shall electronically submit to the Administrator within three (3) months of completion of testing all emission testing results generated from the in-use testing program. The following information must be reported for each test engine:

(1) Engine family,

(2) Model,

(3) Engine serial number,

(4) Date of manufacture,

(5) Estimated hours of use,

(6) Date and time of each test attempt,

(7) Results (if any) of each test attempt,

(8) Results of all emission testing,

(9) Summary of all maintenance and/or adjustments performed,

(10) Summary of all modifications and/or repairs,

(11) Determinations of noncompliance.

(b) The manufacturer must electronically submit the results of its in-use testing with a pre-approved information heading. The Administrator may exempt manufacturers from this requirement upon written request with supporting justification.

(c) All testing reports and requests for approvals made under this subpart shall be addressed to: Manager, Engine Compliance Programs Group 6403–J, U.S. Environmental Protection Agency, 1200 Pennsylvania Ave., NW., Washington, DC 20460.

(d) The Administrator may approve and/or require modifications to a manufacturer's in-use testing programs.

§ 91.806 Voluntary emissions recall.

(a) Prior to an EPA ordered recall, the manufacturer may perform a voluntary emissions recall pursuant to regulations at § 91.904 of this part. Such manufacturer is subject to the reporting requirements at § 91.905 of this part.

(b) Once EPA determines that a substantial number of engines fail to conform with the requirements of section 213 of the Act or this part, the manufacturer will not have the option of a voluntary emissions recall.

Subpart J—Emission-related Defect Reporting Requirements, Voluntary Emission Recall Program

§ 91.901 Applicability.

The requirements of this subpart J are applicable to all marine engines subject to the provisions of subpart A of this part 91. The requirement to report emission-related defects affecting a given class or category of engines remains applicable for five years from the end of the model year in which such engines were manufactured.

§ 91.902 Definitions.

The definitions in subpart A of this part apply to this subpart.

§ 91.903 Applicability to part 85, subpart T.

(a) Marine SI engines subject to provisions of subpart A of this part are subject to emission defect reporting requirements specified in 40 CFR Part 85, subpart T, except for the items set forth in this section.

(b) 40 CFR 85.1901 does not apply. See § 91.901.

(c) Reference to the Clean Air Act, 42 U.S.C. 1857 in 40 CFR 85.1902(a) does not apply. Reference to the Clean Air Act, 42 U.S.C. 7401 does apply.

(d) Reference to the ''approved Application for Certification required by 40 CFR 86.077–22 and like provisions of Part 85 and Part 86 of Title 40 of the Code of Federal Regulations'' does not apply. Reference to the approved application for certification required by 91.108 and like provisions of Part 91 does apply.

(e) Reference to section 202(d) of the Act in § 85.1902(c) does not apply. Reference to section 202(d) and section 213 of the Act does apply.

(f) Reference to section 214 of the Act in § 85.1902(e) and (f) does not apply. Reference to section 216 of the Act does apply.

§ 91.904 Voluntary emission recall.

(a) A manufacturer, prior to initiating a voluntary emission recall program, must submit to the EPA the following information for a 15 day review and comment period:

(1) A description of each class or category of engines recalled, including the number of engines to be recalled, the model year, and such other information as may be required to identify the engines recalled;

(2) A description of the specific modifications, alterations, repairs, corrections, adjustments, or other changes to be made to correct the engines affected by the emission-related defect;

(3) A description of the method by which the manufacturer will notify engine owners including copies of any letters of notification to be sent to engine owners;

(4) A description of the proper maintenance or use, if any, upon which the manufacturer conditions eligibility for repair under the recall plan, and a description of the proof to be required of an engine owner to demonstrate compliance with any such conditions;

(5) A description of the procedure to be followed by engine owners to obtain correction of the nonconformity. This may include designation of the date on or after which the owner can have the nonconformity remedied, the time reasonably necessary to perform the labor to remedy the defect, and the designation of facilities at which the defect can be remedied;

(6) A description of the class of persons other than dealers and authorized warranty agents of the manufacturer who will remedy the defect; and

(7) A description of the system by which the manufacturer will assure that an adequate supply of parts is available to perform the repair under the plan.

(b) The manufacturer must submit at least one report on the progress of the recall campaign. This report is submitted one year from the date notification begins and includes the following information:

(1) The methods used to notify both engine owners, dealers and other individuals involved in the recall campaign;

(2) The number of engines known or estimated to be affected by the emission-related defect and an explanation of the means by which this number was determined;

(3) The number of engines actually receiving repair under the plan;

(4) The number of engine owners, dealers, and other individuals involved in the recall campaign that have been notified and the number of engines that have actually received repair; and

(5) The number of engines determined to be ineligible for remedial action due to a failure to properly maintain or use such engines.

§ 91.905 Reports, voluntary recall plan filing, record retention.

(a) The defect report, voluntary recall plan, and the voluntary recall progress report shall be sent to: Manager, Engine Compliance Programs Group 6403–J, Environmental Protection Agency, 1200 Pennsylvania Ave., NW., Washington, DC 20460.

(b) The information gathered by the manufacturer to compile the reports must be retained for not less than five years from the date of the manufacture of the engines and must be made available to duly authorized officials of the EPA upon request.

§ 91.906 Responsibility under other legal provisions preserved.

The filing of any report under the provisions of this subpart will not affect a manufacturer's responsibility to file reports or applications, obtain approval, or give notice under any provision of law.

§ 91.907 Disclaimer of production warranty applicability.

(a) The act of filing an Emission Defect Information Report is inconclusive as to the existence of a defect subject to the warranty provided by section 207(a) of the Act.

(b) A manufacturer may include on each page of its Emission Defect Information Report a disclaimer stating that the filing of a Defect Information Report pursuant to these regulations is not conclusive as to the applicability of the warranty provided by subpart M of this part.

Subpart K—Exclusion and Exemption of Marine SI Engines

§91.1001 Applicability.

The requirements of this subpart K are applicable to all marine spark-ignition propulsion engines subject to the provisions of subpart A of this part 91.

§91.1002 Definitions.

The definitions in subpart A of this part apply to this subpart. The following definitions also apply to this subpart:

Exemption means exemption from the prohibitions of §91.1103.

Export exemption means an exemption granted under §91.1104(b) for the purpose of exporting new marine SI engines.

National security exemption means an exemption which may be granted under §91.1104(b) for the purpose of national security.

Manufacturer-owned marine engine means an uncertified marine SI engine owned and controlled by a marine SI engine manufacturer and used in a manner not involving lease or sale by itself or in a marine vessel or piece of equipment employed from year to year in the ordinary course of business for product development, production method assessment, or market promotion purposes.

Testing exemption means an exemption which may be granted under §91.1104(b) for the purpose of research, investigations, studies, demonstrations or training, but not including national security.

§91.1003 Exclusions based on section 216(10) of the Act.

(a) For the purpose of determining the applicability of section 216(10) of the Act, any marine SI engine as that term is defined in subpart A of this part, is deemed a nonroad engine.

(b) EPA will maintain a list of models of marine SI engines, and the marine vessels which use such engines, that have been determined to be excluded because they are used solely for competition. This list will be available to the public and may be obtained by writing to the following address: Group Manager, Engine Compliance Programs Group, Engine Programs and Compliance Division (6403J), Environmental Protection Agency, 1200 Pennsylvania Ave., NW., Washington, DC 20460.

(c) Upon written request with supporting documentation, EPA will make written determinations as to whether certain engines are or are not marine SI engines. Engines that are determined not to be marine SI engines are excluded from regulations under this part but may be subject to regulations under another part.

§91.1004 Who may request an exemption.

(a) Any person may request a testing exemption under §91.1005.

(b) Any marine SI engine manufacturer may request a national security exemption under §91.1008.

(c) For marine SI engine manufacturers, marine SI engines for export purposes are exempt without application, subject to the provisions of §91.1009.

(d) For eligible manufacturers, as determined by §91.1006, manufacturer-owned marine SI engines are exempt without application, subject to the provisions of §91.1006.

(e) For any person, display marine SI engines are exempt without application, subject to the provisions of §91.1007.

§91.1005 Testing exemption.

(a) Any person requesting a testing exemption must demonstrate the following:

(1) That the proposed test program has a purpose which constitutes an appropriate basis for an exemption in accordance with §91.1104(b);

(2) That the proposed test program necessitates the granting of an exemption;

(3) That the proposed test program is reasonable in scope; and

(4) That the proposed test program exhibits a degree of control consonant with the purpose of the program and the EPA's monitoring requirements.

(5) Paragraphs (b), (c), (d), and (e) of this section describe what constitutes a sufficient demonstration for each of the four identified elements.

(b) With respect to the purpose of the proposed test program, an appropriate purpose would be research, investigations, studies, demonstrations, or

training, but not national security. A concise statement of purpose is a required item of information.

(c) With respect to the necessity that an exemption be granted, necessity arises from an inability to achieve the stated purpose in a practicable manner without performing or causing to be performed one or more of the prohibited acts under § 91.1103. In appropriate circumstances, time constraints may be a sufficient basis for necessity, but the cost of certification alone, in the absence of extraordinary circumstances, is not a basis for necessity.

(d) With respect to reasonableness, a test program must exhibit a duration of reasonable length and affect a reasonable number of engines. In this regard, required items of information include:

(1) An estimate of the program's duration.

(2) The maximum number of marine engines involved.

(e) With respect to control, the test program must incorporate procedures consistent with the purpose of the test and be capable of affording EPA monitoring capability. As a minimum, required items of information include:

(1) The technical nature of the test;

(2) The site of the test;

(3) The duration and accumulated engine operation associated with the test;

(4) The ownership arrangement with regard to the engines involved in the test;

(5) The intended final disposition of the engines;

(6) The manner in which the engine identification numbers will be identified, recorded, and made available; and

(7) The means or procedure whereby test results will be recorded.

(f) A manufacturer of new marine SI engines may request a testing exemption to cover marine SI engines intended for use in test programs planned or anticipated over the course of a subsequent one-year period. Unless otherwise required by the Manager, Engine Compliance Programs Group, a manufacturer requesting such an exemption need only furnish the information required by paragraphs (a)(1) and (d)(2) of this section along with a description of the recordkeeping and control procedures that will be employed to assure that the engines are used for purposes consistent with section 91.1104(b).

§ 91.1006 Manufacturer-owned exemption and precertification exemption.

(a) Except as provided in paragraph (b) of this section, any manufacturer-owned marine SI engine, as defined by § 91.1002, is exempt from compliance with § 91.1103, without application, if the manufacturer complies with the following terms and conditions:

(1) The manufacturer must establish, maintain, and retain the following adequately organized and indexed information on each exempted engine:

(i) Engine identification number,

(ii) Use of the engine on exempt status and

(iii) Final disposition of any engine removed from exempt status.

(2) The manufacturer must provide right of entry and access to these records to EPA authorized representatives as outlined in § 91.505.

(3) Unless the requirement is waived or an alternative procedure is approved by the Director, Engine Programs & Compliance Division, the manufacturer must permanently affix a label to each marine engine on exempt status. This label should:

(i) Be affixed in a readily visible portion of the engine,

(ii) Be attached in such a manner that it cannot be removed without destruction or defacement,

(iii) State in the English language/ and in block letters and numerals of a color that contrasts with the background of the label, the following information:

(A) The label heading ''Emission Control Information;''

(B) Full corporate name and trademark of manufacturer;

(C) Engine displacement, engine family identification, and model year of engine; or person or office to be contacted for further information about the engine;

(D) The statement ''This marine SI engine is exempt from the prohibitions of 40 CFR 91.1103.''

(4) No provision of paragraph (a)(3) of this section prevents a manufacturer

from including any other information it desires on the label.

§91.1007 Display exemption.

An uncertified marine SI engine is a display engine when it is to be used solely for display purposes, will only be operated incident and necessary to the display purpose, and will not be sold unless an applicable certificate of conformity has been received or the engine has been finally admitted pursuant to subpart H of this part. A display engine is exempt without application.

§91.1008 National security exemption.

(a)(1) Any marine SI engine, otherwise subject to this part, which is used in a vessel that exhibits substantial features ordinarily associated with military combat such as armor and/or permanently affixed weaponry and which will be owned and/or used by an agency of the Federal government with responsibility for national defense, will be exempt from these regulations for purposes of national security. No request for exemption is necessary.

(2) Manufacturers may request a national security exemption for any marine SI engine, otherwise subject to this part, which does not meet the conditions described in paragraph (a)(1) of this section. A manufacturer requesting a national security exemption must state the purpose for which the exemption is required and the request must be endorsed by an agency of the federal government charged with responsibility for national defense.

(b) EPA will maintain a list of models of marine SI engines (and the vessels which use them) that have been granted a national security exemption under paragraph (a)(2) of this section. This list will be available to the public and may be obtained by writing to the following address: Manager, Engine Compliance Programs Group 6403–J, Environmental Protection Agency, 1200 Pennsylvania Ave., NW., Washington, DC 20460.

§91.1009 Export exemptions.

(a) A new marine SI engine intended solely for export, and so labeled or tagged on the outside of the container and on the engine itself, is subject to the provisions of §91.1103, unless the importing country has emission standards for new marine engines which differ from EPA standards.

(b) For the purpose of paragraph (a) of this section, a country having no standards, whatsoever, is deemed to be a country having emission standards which differ from EPA standards.

(c) EPA will maintain a list of foreign countries that have in force marine SI emission standards identical to U.S. EPA standards and have so notified EPA. This list may be obtained by writing to the following address: Manager, Engine Compliance Programs Group 6403–J, Environmental Protection Agency, 1200 Pennsylvania Ave., NW., Washington, DC 20460. New marine SI engines exported to such countries must comply with EPA certification regulations.

(d) It is a condition of any exemption for the purpose of export under §91.1004(b) that such exemption be void *ab initio* with respect to a new marine SI engine intended solely for export if such marine SI engine is sold, or offered for sale, to an ultimate purchaser in the United States for purposes other than export.

§91.1010 Granting of exemptions.

(a) If upon completion of the review of an exemption request made pursuant to §91.1005 or §91.1008, EPA determines it is appropriate to grant such an exemption, a memorandum of exemption will be prepared and submitted to the person requesting the exemption. The memorandum shall set forth the basis for the exemption, its scope, and such terms and conditions as are deemed necessary. Such terms and conditions shall generally include, but are not limited to, agreements by the applicant to conduct the exempt activity in the manner described to EPA, create and maintain adequate records accessible to EPA at reasonable times, employ labels for the exempt engines setting forth the nature of the exemption, take appropriate measures to assure that the terms of the exemption are met, and advise EPA of the termination of the activity and the ultimate disposition of the engines.

(b) Any exemption granted pursuant to paragraph (a) of this section is deemed to cover any subject engine

only to the extent that the specified terms and conditions are complied with. A breach of any term or condition causes the exemption to be void *ab initio* with respect to any engine. Consequently, the causing or the performing of an act prohibited under § 91.1103(a) (1) or (3), other than in strict conformity with all terms and conditions of this exemption renders the person to whom the exemption is granted, and any other person to whom the provisions of § 91.1103 are applicable, liable under sections 204 and 205 of the Act.

§ 91.1011 Submission of exemption requests.

Requests for exemption or further information concerning exemptions and/or the exemption request review procedure should be addressed to: Manager, Engine Compliance Programs Group 6403J, Environmental Protection Agency, 1200 Pennsylvania Ave., NW., Washington, DC 20460.

§ 91.1012 Treatment of confidential information.

The provisions for treatment of confidential information described in § 91.7 apply to this subpart.

Subpart L—Prohibited Acts and General Enforcement Provisions

§ 91.1101 Applicability.

The requirements of subpart L are applicable to all marine engines and vessels subject to the provisions of subpart A of this part 91.

§ 91.1102 Definitions.

The definitions in subpart A of this part apply to this subpart. All terms not defined herein or in subpart A have the meaning given them in the Act.

§ 91.1103 Prohibited acts.

(a) The following acts and the causing thereof are prohibited:

(1)(i) In the case of a manufacturer of new marine SI engines or vessels for distribution in commerce, the sale, the offering for sale, or the introduction, or delivery for introduction, into commerce, of any new marine SI engine manufactured after the applicable effective date under this part unless such engine is covered by a certificate of conformity issued (and in effect) under regulations found in this part.

(ii) In the case of any person, except as provided by regulation of the Administrator, the importation into the United States of any new marine SI engine manufactured after the applicable effective date under this part unless such engine is covered by a certificate of conformity issued (and in effect) under regulations found in this part.

(2)(i) For a person to fail or refuse to permit access to or copying of records or to fail to make reports or provide information required under § 91.1104.

(ii) For a person to fail or refuse to permit entry, testing or inspection authorized under § 91.118, 91.505 or 91.1104.

(iii) For a person to fail or refuse to perform tests, or to have tests performed as required under § 91.118 or § 91.1104.

(iv) For a person to fail to establish or maintain records as required under § 91.1104.

(3)(i) For a person to remove or render inoperative a device or element of design installed on or in a marine engine in compliance with regulations under this part prior to its sale and delivery to the ultimate purchaser, or for a person knowingly to remove or render inoperative such a device or element of design after the sale and delivery to the ultimate purchaser; or

(ii) For a person to manufacture, sell or offer to sell, or install, a part or component intended for use with, or as part of, a marine SI engine, where a principal effect of the part or component is to bypass, defeat, or render inoperative a device or element of design installed on or in a marine SI engine in compliance with regulations issued under this part, and where the person knows or should know that the part or component is being offered for sale or installed for this use or put to such use.

(4) For a manufacturer of a new marine SI engine subject to standards prescribed under this part:

(i) To sell, offer for sale, or introduce or deliver into commerce, a marine SI engine unless the manufacturer has complied with the requirements of § 91.1203.

(ii) To sell, offer for sale, or introduce or deliver into commerce, a marine SI engine unless a label or tag is affixed to the engine in accordance with regulations under this part.

(iii) To provide directly or indirectly in any communication to the ultimate purchaser or a subsequent purchaser that the coverage of a warranty under the Act is conditioned upon use of a part, component, or system manufactured by the manufacturer or a person acting for the manufacturer or under its control, or conditioned upon service performed by such persons, except as provided in subpart M of this part.

(iv) To fail or refuse to comply with the terms and conditions of the warranty under subpart M of this part.

(5) For a manufacturer of new marine vessels or equipment to distribute in commerce, sell, offer for sale, or introduce into commerce, marine vessels or equipment which contain an engine not covered by a certificate of conformity.

(b) For the purposes of enforcement of this part, the following apply:

(1) Nothing in paragraph (a) of this section is to be construed to require the use of manufacturer parts in maintaining or repairing a marine SI engine.

(2) Actions for the purpose of repair or replacement of a device or element of design or any other item are not considered prohibited acts under §91.1103(a) if the actions are a necessary and temporary procedure, the device or element is replaced upon completion of the procedure, and the action results in the proper functioning of the device or element of design.

(3) Actions for the purpose of a conversion of a marine SI engine for use of a clean alternative fuel (as defined in Title II of the Act) are not considered prohibited acts under §91.1103(a) if:

(i) The engine complies with the applicable standard when operating on the alternative fuel, and the device or element is replaced upon completion of the conversion procedure, and

(ii) In the case of engines converted to dual fuel or flexible use, the action results in proper functioning of the device or element when the marine SI engine operates on conventional fuel.

(4) A new marine spark-ignition engine intended solely to replace an engine in an outboard engine, or other engine to which this part is applicable as determined by §§91.1, 91.101, 91.106 that was originally produced with an engine manufactured prior to the applicable implementation date as described in §§91.2, and 91.106 and 91.205(a)(1), or that was originally produced in a model year in which less stringent emission standards under this part were in effect shall not be subject to the requirements of §91.106 or the prohibitions of paragraph (a)(1) of this section provided that:

(i) The engine manufacturer has ascertained that no engine produced by itself or the manufacturer of the engine that is being replaced, if different, and certified to the requirements of this subpart, is available with the appropriate physical or performance characteristics to repower the outboard, personal watercraft or jetboat; and

(ii) Unless an alternative control mechanism is approved in advance by the Administrator, the engine manufacturer or its agent takes ownership and possession of the engine being replaced; and

(iii) The replacement engine is clearly labeled with the following language, or similar alternate language approved in advance by the Administrator:

This engine does not comply with Federal nonroad or on-highway emission requirements. Sale or installation of this engine for any purpose other than as a replacement engine in a marine vessel whose original engine was not certified, or was certified to less stringent emission standards than those that apply to the year of manufacture of this engine, is a violation of Federal law subject to civil penalty; and

(iv) Where the replacement engine is intended to replace an engine built after the applicable implementation date as described in §§91.2, 91.106 and 91.205(a)(1), but built to less stringent emission standards than are currently applicable, the replacement engine shall be identical in all material respects to a certified configuration of the same or later model year as the engine being replaced; and

(v) In cases where an engine is to be imported for replacement purposes under the provisions of this paragraph (b)(4), the term ''engine manufacturer''

does not apply to an individual or other entity that does not possess a current Certificate of Conformity issued by EPA under this part.

[61 FR 52102, Oct. 4, 1996, as amended at 62 FR 42644, Aug. 7, 1997; 65 FR 24314, Apr. 25, 2000]

§ 91.1104 General enforcement provisions.

(a) *Information collection provisions.* (1) Every manufacturer of new marine SI engines and other persons subject to the requirements of this part must establish and maintain records, perform tests where such testing is not otherwise reasonably available under this part, make reports and provide information the Administrator may reasonably require to determine whether the manufacturer or other person has acted or is acting in compliance with this part or to otherwise carry out the provisions of this part, and must, upon request of an officer or employee duly designated by the Administrator, permit the officer or employee at reasonable times to have access to and copy such records.

(2) For purposes of enforcement of this part, an officer or employee duly designated by the Administrator, upon presenting appropriate credentials, is authorized:

(i) To enter, at reasonable times, any establishment of the manufacturer, or of any person whom the manufacturer engaged to perform any activity required under paragraph (a)(1) of this section, for the purposes of inspecting or observing any activity conducted pursuant to paragraph (a)(1) of this section, and

(ii) To inspect records, files, papers, processes, controls, and facilities used in performing an activity required by paragraph (a)(1) of this section, by the manufacturer or by a person whom the manufacturer engaged to perform the activity.

(b) *Exemption provision.* The Administrator may exempt a new marine engine from compliance with § 91.1103 upon such terms and conditions as the Administrator may find necessary for the purpose of export, research, investigations, studies, demonstrations, or training, or for reasons of national security.

(c) *Importation provision.* (1) A new marine SI engine, or vessel offered for importation or imported by a person in violation of § 91.1103 shall be refused admission into the United States, but the Secretary of the Treasury and the Administrator may, by joint regulation, provide for deferring a final determination as to admission and authorizing the delivery of such a marine SI engine offered for import to the owner or consignee thereof upon such terms and conditions (including the furnishing of a bond) as may appear to them appropriate to insure that the marine SI engine will be brought into conformity with the standards, requirements, and limitations applicable to it under this part.

(2) If a marine SI engine is finally refused admission under this paragraph, the Secretary of the Treasury shall cause disposition thereof in accordance with the customs laws unless it is exported, under regulations prescribed by the Secretary, within 90 days of the date of notice of the refusal or additional time as may be permitted pursuant to the regulations.

(3) Disposition in accordance with the customs laws may not be made in such manner as may result, directly or indirectly, in the sale, to the ultimate consumer, of a new marine SI engine that fails to comply with applicable standards of the Administrator under this part.

(d) *Export provision.* A new marine SI engine intended solely for export, and so labeled or tagged on the outside of the container and on the engine itself, shall be subject to the provisions of § 91.1103, except that if the country that is to receive the engine has emission standards that differ from the standards prescribed under subpart B of this part, then the engine must comply with the standards of the country that is to receive the engine.

§ 91.1105 Injunction proceedings for prohibited acts.

(a) The district courts of the United States have jurisdiction to restrain violations of § 91.1103.

(b) Actions to restrain such violations must be brought by and in the name of the United States. In an action, subpoenas for witnesses who are

required to attend a district court in any district may run into any other district.

§91.1106 Penalties.

(a) *Violations.* A violation of the requirements of this subpart is a violation of the applicable provisions of the Act, including sections 203 and 213(d), and is subject to the penalty provisions thereunder.

(1) A person who violates §91.1103 (a)(1), (a)(4), or (a)(5), or a manufacturer or dealer who violates §91.1103(a)(3)(i), is subject to a civil penalty of not more than $25,000 for each violation.

(2) A person other than a manufacturer or dealer who violates §91.1103(a)(3)(i) or any person who violates §91.1103(a)(3)(ii) is subject to a civil penalty of not more than $2,500 for each violation.

(3) A violation with respect to §91.1103 (a)(1), (a)(3)(i), (a)(4), or (a)(5) constitutes a separate offense with respect to each marine SI engine.

(4) A violation with respect to §91.1103(a)(3)(ii) constitutes a separate offense with respect to each part or component. Each day of a violation with respect to §91.1103(a)(6) constitutes a separate offense.

(5) A person who violates §91.1103 (a)(2) or (a)(6) is subject to a civil penalty of not more than $25,000 per day of violation.

(b) *Civil actions.* The Administrator may commence a civil action to assess and recover any civil penalty under paragraph (a) of this section.

(1) An action under this paragraph may be brought in the district court of the United States for the district in which the violation is alleged to have occurred or in which the defendant resides or has the Administrator's principal place of business, and the court shall have jurisdiction to assess a civil penalty.

(2) In determining the amount of a civil penalty to be assessed under this paragraph, the court is to take into account the gravity of the violation, the economic benefit or savings (if any) resulting from the violation, the size of the violator's business, the violator's history of compliance with Title II of the Act, action taken to remedy the violation, the effect of the penalty on the violator's ability to continue in business, and such other matters as justice may require.

(3) In any such action, subpoenas for witnesses who are required to attend a district court in any district may run into any other district.

(c) *Administrative assessment of certain penalties*—(1) *Administrative penalty authority.* In lieu of commencing a civil action under paragraph (b) of this section, the Administrator shall assess any civil penalty prescribed in paragraph (a) of this section, except that the maximum amount of penalty sought against each violator in a penalty assessment proceeding can not exceed $200,000, unless the Administrator and the Attorney General jointly determine that a matter involving a larger penalty amount is appropriate for administrative penalty assessment. Any such determination by the Administrator and the Attorney General is not subject to judicial review. Assessment of a civil penalty is made by an order made on the record after opportunity for a hearing held in accordance with the procedures found at part 22 of this chapter. The Administrator may compromise, or remit, with or without conditions, any administrative penalty which may be imposed under this section.

(2) *Determining amount.* In determining the amount of any civil penalty assessed under this subsection, the Administrator is to take into account the gravity of the violation, the economic benefit or savings (if any) resulting from the violation, the size of the violator's business, the violator's history of compliance with Title II of the Act, action taken to remedy the violation, the effect of the penalty on the violator's ability to continue in business, and such other matters as justice may require.

(3) *Effect of administrator's action.* (i) Action by the Administrator under this paragraph does not affect or limit the Administrator's authority to enforce any provisions of this part; except that any violation with respect to which the Administrator has commenced and is diligently prosecuting an action under

this part, or for which the Administrator has issued a final order not subject to further judicial review and for which the violator has paid a penalty assessment under this part may not be the subject of a civil penalty action under paragraph (b) of this section.

(ii) No action by the Administrator under this part affects a person's obligation to comply with a section of this part.

(4) *Finality of order*. An order issued under this subsection is to become final 30 days after its issuance unless a petition for judicial review is filed under paragraph (c)(5) of this section.

(5) *Judicial review*. (i) A person against whom a civil penalty is assessed in accordance with this subsection may seek review of the assessment in the United States District Court for the District of Columbia or for the district in which the violation is alleged to have occurred, in which such person resides, or where the person's principle place of business is located, within the 30-day period beginning on the date a civil penalty order is issued. The person must simultaneously send a copy of the filing by certified mail to the Administrator and the Attorney General.

(ii) The Administrator must file in the court within 30 days a certified copy, or certified index, as appropriate, of the record on which the order was issued. The court is not to set aside or remand any order issued in accordance with the requirements of this paragraph unless substantial evidence does not exist in the record, taken as a whole, to support the finding of a violation or unless the Administrator's assessment of the penalty constitutes an abuse of discretion, and the court is not to impose additional civil penalties unless the Administrator's assessment of the penalty constitutes an abuse of discretion. In any proceedings, the United States may seek to recover civil penalties assessed under this section.

(6) *Collection*. (i) If any person fails to pay an assessment of a civil penalty imposed by the Administrator as provided in this part after the order making the assessment has become final or after a court in an action brought under paragraph (c)(5) of this section has entered a final judgment in favor of the Administrator, the Administrator is to request that the Attorney General bring a civil action in an appropriate district court to recover the amount assessed (plus interest at rates established pursuant to section 6621(a)(2) of the Internal Revenue Code of 1986 from the date of the final order or the date of final judgment, as the case may be). In such an action, the validity, amount, and appropriateness of the penalty is not subject to review.

(ii) A person who fails to pay on a timely basis the amount of an assessment of a civil penalty as described in paragraph (c)(6)(i) of this section is required to pay, in addition to that amount and interest, the United States' enforcement expenses, including attorney's fees and costs for collection proceedings, and a quarterly nonpayment penalty for each quarter during which the failure to pay persists. The nonpayment penalty is an amount equal to 10 percent of the aggregate amount of that person's penalties and nonpayment penalties which are unpaid as of the beginning of such quarter.

§ 91.1107 Warranty provisions.

(a) The manufacturer of each marine SI engine must warrant to the ultimate purchaser and each subsequent purchaser that the engine is designed, built, and equipped so as to conform at the time of sale with applicable regulations under section 213 of the Act, and is free from defects in materials and workmanship which cause such engine to fail to conform with applicable regulations for its warranty period (as determined under § 91.1203).

(b) In the case of an engine part, the manufacturer or rebuilder of the part may certify according to § 85.2112 of this chapter that use of the part will not result in a failure of the engine to comply with emission standards promulgated in this part.

(c) For the purposes of this section, the owner of any engine warranted under this part is responsible for the proper maintenance of the engine. Proper maintenance includes replacement and service, at the owner's expense at a service establishment or facility of the owner's choosing, such

items as spark plugs, points, condensers, and any other part, item, or device related to emission control (but not designed for emission control) under the terms of the last sentence of section 207(a)(3) of the Act, unless such part, item, or device is covered by any warranty not mandated by this Act.

§91.1108 In-use compliance provisions.

(a) Effective with respect to marine engine and vessels manufactured during model years 1997 and after:

(1) If the Administrator determines that a substantial number of any class or category of engines, although properly maintained and used, do not conform to the regulations prescribed under section 213 of the Act when in actual use throughout their useful life (as defined under §91.105(a)), the Administrator shall immediately notify the manufacturer of such nonconformity and require the manufacturer to submit a plan for remedying the nonconformity of the engines with respect to which such notification is given.

(i) The manufacturer's plan shall provide that the nonconformity of any such engines which are properly used and maintained will be remedied at the expense of the manufacturer.

(ii) If the manufacturer disagrees with such determination of nonconformity and so advises the Administrator, the Administrator shall afford the manufacturer and other interested persons an opportunity to present their views and evidence in support thereof at a public hearing. Unless, as a result of such hearing, the Administrator withdraws such determination of nonconformity, the Administrator shall, within 60 days after the completion of such hearing, order the manufacturer to provide prompt notification of such nonconformity in accordance with paragraph (a)(2) of this section. The manufacturer shall comply in all respects with the requirements of subpart I of this part.

(2) Any notification required to be given by the manufacturer under paragraph (a)(1) of this section with respect to any class or category of engines shall be given to dealers, ultimate purchasers, and subsequent purchasers (if known) in such manner and containing such information as required in subparts I and J of this part.

(3)(i) The manufacturer shall furnish with each new engine written instructions for the proper maintenance and use of the engine by the ultimate purchaser as required under §91.1204. The manufacturer shall provide in boldface type on the first page of the written maintenance instructions notice that maintenance, replacement, or repair of the emission control devices and systems may be performed by any engine repair establishment or individual using any engine part which has been certified as provided in §91.1107(b).

(ii) The instruction under paragraph (a)(3)(i) of this section must not include any condition on the ultimate purchaser's using, in connection with such engine, any component or service (other than a component or service provided without charge under the terms of the purchase agreement) which is identified by brand, trade, or corporate name. Subject instructions also must not directly or indirectly distinguish between service performed by the franchised dealers of such manufacturer, or any other service establishments with which such manufacturer has a commercial relationship, and service performed by independent engine repair facilities with which such manufacturer has no commercial relationship.

(iii) The prohibition of paragraph (a)(3)(ii) of this section may be waived by the Administrator if:

(A) The manufacturer satisfies the Administrator that the engine will function properly only if the component or service so identified is used in connection with such engine, and

(B) The Administrator finds that such a waiver is in the public interest.

(iv) In addition, the manufacturer shall indicate by means of a label or tag permanently affixed to the engine that the engine is covered by a certificate of conformity issued for the purpose of assuring achievement of emission standards prescribed under section 213 of the Act. This label or tag shall also contain information relating to control of emissions as prescribed under §91.113.

(b) The manufacturer bears all cost obligation a dealer incurs as a result of

a requirement imposed by paragraph (a) of this section. The transfer of any such cost obligation from a manufacturer to a dealer through franchise or other agreement is prohibited.

(c) If a manufacturer includes in an advertisement a statement respecting the cost or value of emission control devices or systems, the manufacturer shall set forth in the statement the cost or value attributed to these devices or systems by the Secretary of Labor (through the Bureau of Labor Statistics). The Secretary of Labor, and his or her representatives, has the same access for this purpose to the books, documents, papers, and records of a manufacturer as the Comptroller General has to those of a recipient of assistance for purposes of section 311 of the Act.

(d) Any inspection of a engine for purposes of paragraph (a)(1) of this section, after its sale to the ultimate purchaser, is to be made only if the owner of such vehicle or engine voluntarily permits such inspection to be made, except as may be provided by any state or local inspection program.

Subpart M—Emission Warranty and Maintenance Instructions

§ 91.1201 Applicability.

The requirements of this subpart M are applicable to all engines subject to the provisions of subpart A of this part 91.

§ 91.1202 Definitions.

The definitions of subpart A of this part apply to this subpart.

§ 91.1203 Emission warranty, warranty period.

(a) Warranties imposed by this subpart shall be phased in according to the following schedule.

(1) For model years 1998–2000, and for MY 1997 engine families certified pursuant to § 91.205, all emission related components shall be warranted for a period of one year of engine use.

(2) For model years 2001–2003:

(i) Emission related components shall be warranted for a period of one year of engine use.

(ii) Specified major emission control components shall be warranted for a period of three years or 200 hours of engine use, whichever occurs first.

(3) For model years 2004 and beyond:

(i) Emission-related components shall be warranted for a period of two years or 200 hours of engine use, whichever occurs first.

(ii) Specified major emission control components shall be warranted for a period of three years or 200 hours of engine use, whichever occurs first.

(b) The manufacturer of each new marine SI engine must warrant to the ultimate purchaser and each subsequent purchaser, that the engine is designed, built, and equipped so as to conform at the time of sale with applicable regulations under section 213 of the Act, and the engine is free from defects in materials and workmanship which cause such engine to fail to conform with applicable regulations for its warranty period.

(c) In the case of a marine SI engine part, the manufacturer or rebuilder of the part may certify according to § 85.2112 ot this chapter that use of the part will not result in a failure of the engine to comply with emission standards promulgated in this part.

(d) For the purposes of this section, the owner of any marine SI engine warranted under this part is responsible for the proper maintenance of the engine as stated in the manufacturer's written instructions. Proper maintenance generally includes replacement and service, at the owner's expense at a service establishment or facility of the owner's choosing, such items as spark plugs, points, condensers, and any other part, item, or device related to emission control (but not designed for emission control) under the terms of the last sentence of section 207(a)(3) of the Act, unless such part, item, or device is covered by any warranty not mandated by this Act.

§ 91.1204 Furnishing of maintenance and use instructions to ultimate purchaser.

(a) The manufacturer must furnish or cause to be furnished to the ultimate purchaser of each new marine SI engine written instructions for the maintenance and use needed to assure proper functioning of the emission control system.

(b) The manufacturer must provide in boldface type on the first page of the written maintenance instructions notice that maintenance, replacement, or repair of the emission control devices and systems may be performed by any marine SI engine repair establishment or individual.

(c) The instructions under paragraph (a) of this section will not include any condition on the ultimate purchaser's using, in connection with such engine, any component or service (other than a component or service provided without charge under the terms of the purchase agreement) which is identified by brand, trade, or corporate name. Such instructions also will not directly or indirectly distinguish between service performed by the franchised dealers of such manufacturer or any other service establishments with which such manufacturer has a commercial relationship and service performed by independent marine engine repair facilities which such manufacturer has no commercial relationship.

(d) The prohibition of paragraph (c) of this section may be waived by the Administrator if:

(1) The manufacturer satisfies the Administrator that the engine will function properly only if the component or service so identified is used in connection with such engine, and

(2) The Administrator finds that such a waiver is in the public interest.

Subpart N—In-Use Credit Program for New Marine Engines

§91.1301 Applicability.

Marine SI engines subject to the provisions of subpart A of this part 91 are eligible to participate in the in-use credit program described in this subpart.

§91.1302 Definitions.

The definitions in subpart A of this part apply to this subpart. The following definitions shall also apply to this subpart:

Averaging means the exchange of marine engine in-use emission credits among engine families within a given manufacturer's product line.

Banking means the retention of marine engine in-use emission credits by the manufacturer generating the emission credits for use in future model year averaging or trading as permitted by these regulations.

Carry-over engine family means an engine family which undergoes certification using carryover test data from previous model years. See §91.118(c).

Emission credits or in-use credits represent the amount of emission reduction or exceedance, for each regulated pollutant, by a marine engine family below or above, respectively, the applicable certification family emission limit (FEL) to which the engine family is certified. Emission reductions below the FEL are considered ''positive credits,'' while emission exceedances above the FEL are considered ''negative or required credits.''

Banked credits refer to positive emission credits based on actual applicable production/sales volume as contained in the end of model year in-use testing reports submitted to EPA. Some or all of these banked credits may be revoked if EPA review of the end of model year in-use testing reports or any subsequent audit action(s) uncovers problems or errors.

Trading means the exchange of marine SI engine in-use emission credits between manufacturers and/or brokers.

Compliance level for an engine family is determined by averaging the in-use test results from each engine.

§91.1303 General provisions.

(a) The in-use credit program for eligible marine engines is described in this subpart. Participation in this program is voluntary.

(b) A marine SI engine family is eligible to participate in the in-use credit program if it is subject to regulation under subpart B of this part with certain exceptions specified in paragraph (c) of this section.

(c) Marine SI engines may not participate in the in-use averaging, banking, and trading program if they are delivered to a ''point of first retail sale'' outside of the U.S., as defined in §91.202.

(d) Credits generated and used in the marine engine certification averaging, banking, and trading program pursuant to the provisions of subpart C of this

part are not interchangeable with credits generated and used in the marine engine in-use credit program.

(e) An engine family with a compliance level, as determined by in-use testing pursuant to subpart I of this part and paragraph (h) of this section, below the applicable FEL to which the engine family is certified may generate emission credits for averaging, banking, or trading in the in-use credit program.

(f) Positive credits generated in a given model year may be used in that model year and/or in any subsequent model year.

(g) A manufacturer of an engine family with a compliance level exceeding the applicable FEL to which the engine family is certified, may, prior to the date of the report required under paragraph (j) of this section use previously banked credits, purchase credits from another manufacturer, or perform additional testing pursuant to paragraph (i) of this section to address (as calculated elsewhere in this subpart) the associated credit deficit (negative credits or a need for credits).

(h) A manufacturer may carry-over an in-use credit deficit up to and including model year 2003. Beginning with model year 2004, all manufacturers must have a zero or positive credit balance.

(i) A manufacturer must notify EPA of plans to test additional engine families beyond the maximum 25 percent required in subpart I of this part for the in-use testing program. Such notice must be submitted 30 days prior to initiation of service accumulation. EPA may approve, with adequate justification, the use of an existing fleet for additional testing. If the additional testing discovers an engine family to be in noncompliance with the applicable FEL, the testing must be treated as if it were a failure of the normal in-use testing requirement of an engine family.

(j) Manufacturers must demonstrate a zero or positive credit balance under the in-use credit program for a particular model year within 90 days of the end of the in-use testing of that model year's engine families, or at the same time as the final certification AB&T report (required under § 91.210), whichever is later.

§ 91.1304 Averaging.

(a) A manufacturer may use averaging across engine families to demonstrate a zero or positive credit balance for a model year. Positive credits to be used in averaging may be obtained from credits generated by another engine family of the same model year, credits banked in previous model years, or credits obtained through trading.

(b) Beginning in model year 2004, credits used to demonstrate a zero or positive credit balance must be used at a rate of 1.1 to 1.

§ 91.1305 Banking.

(a) A manufacturer of a marine SI engine family with an in-use compliance level below the applicable FEL to which the engine family is certified for a given model year may bank positive in-use credits for that model year for use in in-use averaging and trading.

(b) A manufacturer may consider credits banked 30 days after the submission of the report required by § 91.1309(a). During the 30 day period EPA will work with the manufacturer to correct any error in calculating banked credits, if necessary.

§ 91.1306 Trading.

(a) A marine engine manufacturer may exchange positive in-use emission credits with other marine engine manufacturers through trading.

(b) In-use credits for trading can be obtained from credits banked for model years prior to the model year of the engine family requiring in-use credits.

(c) Traded in-use credits can be used for averaging, banking, or further trading transactions.

(d) Unless otherwise approved by EPA, a manufacturer that generates positive in-use credits must wait 30 days after it has both completed in-use testing for the model year for which the credits were generated and submitted the report required by § 91.1309(a) before it may transfer credits to another manufacturer or broker.

(e) In the event of a negative credit balance resulting from a transaction, both the buyer and the seller are liable,

except in cases involving fraud. Engine families participating in a negative trade may be subject to recall under subpart I of this part.

§91.1307 Credit calculation.

For each participating engine family, emission credits (positive or negative) are to be calculated according to the following equation and rounded, in accordance with ASTM E29–93a, to the nearest gram. ASTM E29–93a has been incorporated by reference. See §91.6. Consistent units are to be used throughout the equation. The following equation is used to determine the credit status for an engine family whether generating positive or negative in-use emission credits:

$$\sum_{t=1}^{\text{max useful life}} \frac{S(t) \times \text{sales} \times (\text{FEL} - \text{CL}) \times \text{Power} \times \text{AF} \times 0.207 \times \mu_{\text{use}}}{1.03^{t}}$$

Where:

S(t)=cumulative fraction survived at time t;

μ_{life}=average useful life in years, specific to the power rating and the application as given below.

Engine type	(μ_{life})
Outboard	$41.27 \times \left(\frac{\text{Power}}{0.746}\right)^{-0.204}$
Personal Watercraft	10

Power=the average power of an engine family in kW (sales weighted). The power of each configuration is the rated output in kilowatts as determined by SAE J1228. This procedure has been incorporated by reference. See §91.6.

t=time in model years

max useful life=maximum useful life specific to the power rating and the application; max useful life = $2\mu_{life}$

sales = the number of eligible sales tracked to the point of first retail sale in the U.S. for the given engine family during the model year.

FEL=the family emission limit for the engine family in grams per kilowatt hour.

CL=compliance level of the in-use testing in g/kW–hr.

μ_{use}=mean use in hours per year. For outboard engines, μ_{use}=34.8 hrs /yr. For personal watercraft, μ_{use}=77.3 hrs/yr;

AF=adjustment factor for the number of tests conducted

No. eng. tested	2*, 4	6	8	10
Adjustment factor	.5	.75	.9	1

*Small volume manufacturer

§91.1308 Maintenance of records.

(a) Any manufacturer that is participating in the in-use credit program set forth in this subpart shall establish, maintain, and retain the records required by §91.209 with respect to its participation in the in-use credit program.

(b) EPA may void *ab initio* a certificate of conformity for an engine family for which the manufacturer fails to retain the records required under this section or to provide such information to the Administrator upon request.

§91.1309 Reporting requirements.

(a) Any manufacturer who participates in the in-use credit program is required to submit an end of the model year in-use testing report either within 90 days of the end of the model year in-use testing of a given model year's engine families, or at the same time as the final certification AB&T report (required under §91.210), whichever is later. The end of the model year in-use testing report must contain the required information and show the calculated credits from all the in-use testing conducted by the manufacturer for a given model year.

(b) Reports shall be submitted to: Manager, Engine Compliance Programs Group 6403–J, U.S. Environmental Protection Agency, 1200 Pennsylvania Ave., NW., Washington, DC 20460.

(c) A manufacturer that fails to submit a timely report as required in paragraph (a) of this section will be considered to not have participated in the in-use credit program.

(d) If EPA or the manufacturer determines that a reporting error occurred on an end of model year report previously submitted to EPA under this subpart, or an engine family in-use testing report submitted to EPA under subpart I, the manufacturer's credits and credit calculations will be recalculated. Erroneous positive credits will be void. Erroneous negative credits may be adjusted by EPA. An update of previously submitted ''point of first retail sale'' information is not considered an error and no increase in the number of credits will be allowed unless an actual error occurred in the calculation of credits due to an error in the ''point of first retail sale'' information from the time of the original end of model year report.

§ 91.1310 Notice of opportunity for hearing.

Any voiding of an engine family's certificate of conformity under § 91.1308(b) of this subpart will occur only after the manufacturer concerned has been offered an opportunity for a hearing conducted in accordance with §§ 91.512, 91.513, 91.514 and 91.515.

PART 92—CONTROL OF AIR POLLUTION FROM LOCOMOTIVES AND LOCOMOTIVE ENGINES

Subpart A—General Provisions for Emission Regulations for Locomotives and Locomotive Engines

Sec.
92.1 Applicability.
92.2 Definitions.
92.3 Abbreviations.
92.4 Treatment of confidential information.
92.5 Reference materials.
92.6 Regulatory structure.
92.7 General standards.
92.8 Emission standards.
92.9 Compliance with emission standards.
92.10 Warranty period.
92.11 Compliance with emission standards in extraordinary circumstances.
92.12 Interim provisions.

Subpart B—Test Procedures

92.101 Applicability.
92.102 Definitions and abbreviations.
92.103 Test procedures; overview.
92.104 Locomotive and engine testing; overview.
92.105 General equipment specifications.
92.106 Equipment for loading the engine.
92.107 Fuel flow measurement.
92.108 Intake and cooling air measurements.
92.109 Analyzer specifications.
92.110 Weighing chamber and micro-balance.
92.111 Smoke measurement system.
92.112 Analytical gases.
92.113 Fuel specifications.
92.114 Exhaust gas and particulate sampling and analytical system.
92.115 Calibrations; frequency and overview.
92.116 Engine output measurement system calibrations.
92.117 Gas meter or flow instrumentation calibration, particulate measurement.
92.118 Analyzer checks and calibrations.
92.119 Hydrocarbon analyzer calibration.
92.120 NDIR analyzer calibration and checks.
92.121 Oxides of nitrogen analyzer calibration and check.
92.122 Smoke meter calibration.
92.123 Test procedure; general requirements.
92.124 Test sequence; general requirements.
92.125 Pre-test procedures and preconditioning.
92.126 Test run.
92.127 Emission measurement accuracy.
92.128 Particulate handling and weighing.
92.129 Exhaust sample analysis.
92.130 Determination of steady-state concentrations.
92.131 Smoke, data analysis.
92.132 Calculations.
92.133 Required information.

Subpart C—Certification Provisions

92.201 Applicability.
92.202 Definitions.
92.203 Application for certification.
92.204 Designation of engine families.
92.205 Prohibited controls, adjustable parameters.
92.206 Required information.
92.207 Special test procedures.
92.208 Certification.
92.209 Certification with multiple manufacturers or remanufacturers.
92.210 Amending the application and certificate of conformity.
92.211 Emission-related maintenance instructions for purchasers.
92.212 Labeling.
92.213 Submission of locomotive and engine identification numbers.
92.214 Production locomotives and engines.
92.215 Maintenance of records; submittal of information; right of entry.
92.216 Hearing procedures.

Subpart D—Certification Averaging, Banking, and Trading Provisions

92.301 Applicability.
92.302 Definitions.

92.303 General provisions.
92.304 Compliance requirements.
92.305 Credit generation and use calculation.
92.306 Certification.
92.307 Labeling.
92.308 Maintenance of records.
92.309 Reports.
92.310 Notice of opportunity for hearing.

Subpart E—Emission-Related Defect Reporting Requirements, Voluntary Emission Recall Program

92.401 Applicability.
92.402 Definitions.
92.403 Emission defect information report.
92.404 Voluntary emissions recall reporting.
92.405 Alternative report formats.
92.406 Reports filing: record retention.
92.407 Responsibility under other legal provisions preserved.
92.408 Disclaimer of production warranty applicability.

Subpart F—Manufacturer and Remanufacturer Production Line Testing and Audit Programs

92.501 Applicability.
92.502 Definitions.
92.503 General requirements.
92.504 Right of entry and access.
92.505 Sample selection for testing.
92.506 Test procedures.
92.507 Sequence of testing.
92.508 Calculation and reporting of test results.
92.509 Maintenance of records; submittal of information.
92.510 Compliance with criteria for production line testing.
92.511 Remanufactured locomotives: installation audit requirements.
92.512 Suspension and revocation of certificates of conformity.
92.513 Request for public hearing.
92.514 Administrative procedures for public hearing.
92.515 Hearing procedures.
92.516 Appeal of hearing decision.
92.517 Treatment of confidential information.

Subpart G—In-Use Testing Program

92.601 Applicability.
92.602 Definitions.
92.603 General provisions.
92.604 In-use test procedure.
92.605 General testing requirements.
92.606 Maintenance, procurement and testing of in-use locomotives.
92.607 In-use test program reporting requirements.

Subpart H—Recall Regulations

92.701 Applicability.
92.702 Definitions.
92.703 Voluntary emissions recall.
92.704 Notice to manufacturer or remanufacturer of nonconformity; submission of remedial plan.
92.705 Remedial plan.
92.706 Approval of plan: Implementation.
92.707 Notification to locomotive or locomotive engine owners.
92.708 Records and reports.
92.709 Public hearings.

Subpart I—Importation of Nonconforming Locomotives and Locomotive Engines

92.801 Applicability.
92.802 Definitions.
92.803 Admission.
92.804 Exemptions.
92.805 Prohibited acts; penalties.

Subpart J—Exclusion and Exemption Provisions

92.901 Purpose and applicability.
92.902 Definitions.
92.903 Exclusions.
92.904 Exemptions.
92.905 Testing exemption.
92.906 Manufacturer-owned, remanufacturer-owned exemption and display exemption.
92.907 Non-locomotive-specific engine exemption.
92.908 National security exemption.
92.909 Export exemptions.
92.910 Granting of exemptions.
92.911 Submission of exemption requests.

Subpart K—Requirements Applicable to Owners and Operators of Locomotives and Locomotive Engines

92.1001 Applicability.
92.1002 Definitions.
92.1003 In-use testing program.
92.1004 Maintenance and repair.
92.1005 In-use locomotives.
92.1006 Refueling requirements.

Subpart L—General Enforcement Provisions and Prohibited Acts

92.1101 Applicability.
92.1102 Definitions.
92.1103 Prohibited acts.
92.1104 General enforcement provisions.
92.1105 Injunction proceedings for prohibited acts.
92.1106 Penalties.
92.1107 Warranty provisions.
92.1108 In-use compliance provisions.

APPENDIX I TO PART 92—EMISSION-RELATED LOCOMOTIVE AND ENGINE PARAMETERS AND SPECIFICATIONS
APPENDIX II TO PART 92—INTERPRETIVE RULING FOR § 92.705—REMEDIAL PLANS
APPENDIX III TO PART 92—SMOKE STANDARDS FOR NON-NORMALIZED MEASUREMENTS
APPENDIX IV TO PART 92—GUIDELINES FOR DETERMINING EQUIVALENCY BETWEEN EMISSION MEASUREMENT SYSTEMS

AUTHORITY: 42 U.S.C. 7522, 7523, 7524, 7525, 7541, 7542, 7543, 7545, 7547, 7549, 7550 and 7601(a).

SOURCE: 63 FR 18998, Apr. 16, 1998, unless otherwise noted.

Subpart A—General Provisions for Emission Regulations for Locomotives and Locomotive Engines

§ 92.1 Applicability.

(a) Except as noted in paragraph (b) of this section, the provisions of this part apply to manufacturers, remanufacturers, owners and operators of:

(1) Locomotives and locomotive engines manufactured on or after January 1, 2000; and

(2) Locomotives and locomotive engines manufactured on or after January 1, 1973 and remanufactured on or after January 1, 2000; and

(3) Locomotives and locomotive engines manufactured prior to January 1, 1973, and upgraded on or after January 1, 2000.

(b) The requirements and prohibitions of this part do not apply with respect to:

(1) Steam locomotives, as defined in § 92.2;

(2) Locomotives powered solely by an external source of electricity;

(3) Locomotive engines which provide only hotel power (see 40 CFR part 89 to determine if such engines are subject to EPA emission requirements); or

(4) Nonroad vehicles excluded from the definition of locomotive in § 92.2, and the engines used in such nonroad vehicles (see 40 CFR parts 86 and 89 to determine if such vehicles or engines are subject to EPA emission requirements).

(c) For cases in which there are multiple entities meeting the definition of manufacturer or remanufacturer, see § 92.209 for guidance.

§ 92.2 Definitions.

(a) The definitions of this section apply to this subpart. They also apply to all subparts of this part, except where noted otherwise.

(b) As used in this part, all terms not defined in this section shall have the meaning given them in the Act:

Act means the Clean Air Act as amended (42 U.S.C. 7401 *et seq.*).

Administrator means the Administrator of the Environmental Protection Agency or his/her authorized representative.

Aftertreatment system or *aftertreatment component* or *aftertreatment technology* means any system or component or technology mounted downstream of the exhaust valve or exhaust port whose design function is to reduce exhaust emissions.

Alcohol fuel means a fuel consisting primarily (more than 50 percent by weight) of one or more alcohols: e.g., methyl alcohol, ethyl alcohol.

Alternator/generator efficiency means the ratio of the electrical power output from the alternator/generator to the mechanical power input to the alternator/generator at the operating point.

Alternator/generator input horsepower means the mechanical horsepower input to the main alternator or generator of a locomotive. For the purpose of calculating brake horsepower, alternator/generator input horsepower does not include any power used to circulate engine coolant, circulate engine lubricant, or to supply fuel to the engine.

Applicable standard means a standard to which a locomotive or locomotive engine is subject; or, where a locomotive or locomotive engine is certified another standard or FEL, applicable standard means the other standard or FEL to which the locomotive or locomotive engine is certified, as allowed by § 92.8. This definition does not apply to subpart D of this part.

Auxiliary emission control device (AECD) means any element of design which senses temperature, locomotive speed, engine RPM, atmospheric pressure, manifold pressure or vacuum, or any other parameter for the purpose of activating, modulating, delaying, or deactivating the operation of any part

of the emission control system (including, but not limited to injection timing); or any other feature that causes in-use emissions to be higher than those measured under test conditions, except as allowed by this part.

Auxiliary engine means a locomotive engine that provides hotel power, but does not provide power to propel the locomotive.

Auxiliary power means the power provided by the main propulsion engine to operate accessories such as cooling fans.

Averaging for locomotives and locomotive engines means the exchange of emission credits among engine families within a given manufacturer's, or remanufacturer's, product line.

Banking means the retention of emission credits by a credit holder for use in future calendar year averaging or trading as permitted by the regulations in this part.

Brake horsepower means the sum of the alternator/generator input horsepower and the mechanical accessory horsepower, excluding any power used to circulate engine coolant, circulate engine lubricant, or to supply fuel to the engine.

Calibration means the set of specifications, including tolerances, unique to a particular design, version, or application of a component, or components, or assembly capable of functionally describing its operation over its working range. This definition does apply to subpart B of this part.

Class I freight railroad means a Class I railroad that primarily transports freight rather than passengers.

Class I railroad means a railroad that has been classified as a Class I railroad by the Surface Transportation Board.

Class II railroad means a railroad that has been classified as a Class II railroad by the Surface Transportation Board.

Class III railroad means a railroad that has been classified as a Class III railroad by the Surface Transportation Board.

Configuration means any subclassification of an engine family which can be described on the basis of gross power, emission control system, governed speed, injector size, engine calibration, and other parameters as designated by the Administrator.

Crankcase emissions means emissions to the atmosphere from any portion of the crankcase ventilation or engine lubrication systems.

Defeat device means an AECD or other control feature that reduces the effectiveness of the emission control system under conditions which may reasonably be expected to be encountered in normal locomotive operation and use, unless the AECD or other control feature has been identified by the certifying manufacturer or remanufacturer in the application for certification, and:

(1) Such conditions are substantially represented by the portion of the federal test procedure during which the applicable emission rates are measured;

(2) The need for the AECD is justified in terms of protecting the locomotive or locomotive engine against damage or accident; or

(3) The AECD does not go beyond the requirements of engine starting.

Deterioration factor means the difference between exhaust emissions at the end of useful life and exhaust emissions at the low mileage test point expressed as either: the ratio of exhaust emissions at the end of useful life to exhaust emissions at the low mileage test point (for multiplicative deterioration factors); or the difference between exhaust emissions at the end of useful life exhaust emissions at the low mileage test point (for additive deterioration factors).

Diesel fuel means any fuel suitable for use in diesel engines, and which is commonly or commercially known or sold as diesel fuel.

Emission control system means those devices, systems or elements of design which control or reduce the emission of substances from an engine. This includes, but is not limited to, mechanical and electronic components and controls, and computer software.

Emission credits represent the amount of emission reduction or exceedance, by a locomotive engine family, below or above the emission standard, respectively. Emission reductions below the standard are considered as ''positive credits,'' while emission exceedances

above the standard are considered as ''negative credits.'' In addition, ''projected credits'' refer to emission credits based on the projected applicable production/sales volume of the engine family. ''Reserved credits'' are emission credits generated within a calendar year waiting to be reported to EPA at the end of the calendar year. ''Actual credits'' refer to emission credits based on actual applicable production/sales volume as contained in the end-of-year reports submitted to EPA.

Emission-data engine means an engine which is tested for purposes of emission certification or production line testing.

Emission-data locomotive means a locomotive which is tested for purposes of emission certification or production line testing.

Emission-related defect means a defect in design, materials, or workmanship in a device, system, or assembly described in the approved Application for certification which affects any parameter or specification enumerated in Appendix I of this part.

Emission-related maintenance means that maintenance which substantially affects emissions or which is likely to affect the deterioration of the locomotive or engine with respect to emissions, as described in an approved Application for certification.

Engine family means a group of locomotive or locomotive engine configurations which are expected to have similar emission characteristics throughout the useful lives of the locomotives and engines (see § 92.204), and which are (or were) covered (or requested to be covered) by a specific certificate of conformity.

Engine used in a locomotive means an engine incorporated into a locomotive or intended for incorporation into a locomotive.

Engineering analysis means a summary of scientific and/or engineering principles and facts that support a conclusion made by a manufacturer or remanufacturer, with respect to compliance with the provisions of this part.

EPA Enforcement Officer means any officer or employee of the Environmental Protection Agency so designated in writing by the Administrator or his/her designee.

Ethanol means a fuel that contains at least 50 percent ethanol (ethyl alcohol, (C_2H_5OH)) by volume.

Exhaust emissions means substances (i.e., gases and particles) emitted to the atmosphere from any opening downstream from the exhaust port or exhaust valve of a locomotive engine.

Family Emission Limit means an emission level declared by the certifying manufacturer or remanufacturer to serve in lieu of an otherwise applicable emission standard for certification and compliance purposes in the averaging, banking and trading program. FELs are expressed to the same number of decimal places as the applicable emission standard.

Freshly manufactured locomotive means a locomotive which is powered by a freshly manufactured engine, and which contains fewer than 25 percent previously used parts (weighted by the dollar value of the parts).

Freshly manufactured locomotive engine means a new locomotive engine which has not been remanufactured.

Fuel system means the combination of fuel tank(s), fuel pump(s), fuel lines and filters, pressure regulator(s), and fuel injection components (or pressure regulator(s) and carburetor(s) if fuel injection is not employed), fuel system vents, and any other component involved in the delivery of fuel to the engine.

Gaseous fuel means a fuel which is a gas at standard temperature and pressure. This includes both natural gas and liquefied petroleum gas.

Green engine factor means a factor that is applied to emission measurements from a locomotive or locomotive engine that has had little or no service accumulation. The green engine factor adjusts emission measurements to be equivalent to emission measurements from a locomotive or locomotive engine that has had approximately 300 hours of use.

High-altitude means relating to an altitude greater than 4000 feet (1220 meters) and less than 7000 feet (2135 meters), or equivalent observed barometric test conditions of 25.7 to 22.7 inch Hg (88.5 to 78.1 kilopascals).

Hotel power means the power provided by an engine on a locomotive to operate equipment on passenger cars of a

train; e.g., heating and air conditioning, lights, etc.

Idle speed means that speed, expressed as the number of revolutions of the crankshaft per unit of time (e.g., rpm), at which the engine is set to operate when not under load for purposes of propelling the locomotive.

Importer means an entity or person who imports locomotives or locomotive engines from a foreign country into the United States (including the Commonwealth of Puerto Rico, the Virgin Islands, Guam, American Samoa, and the Northern Mariana Islands).

Inspect and qualify means to determine that a previously used component or system meets all applicable criteria listed for the component or system in a certificate of conformity for remanufacturing (e.g., determine that the component or system is functionally equivalent to one that has not been used previously).

Installer means an individual or entity which assembles remanufactured locomotives or locomotive engines.

Liquefied petroleum gas means the commercial product marketed as liquefied petroleum gas or propane.

Locomotive means a self-propelled piece of on-track equipment designed for moving or propelling cars that are designed to carry freight, passengers or other equipment, but which itself is not designed or intended to carry freight, passengers (other than those operating the locomotive) or other equipment. Other equipment which is designed for operation both on highways and rails; specialized railroad equipment for maintenance, construction, post accident recovery of equipment, and repairs; and other similar equipment; and vehicles propelled by engines with rated horsepower of less than 750 kW (1006 hp) are not locomotives (see 40 CFR Parts 86 and 89 for this equipment).

Locomotive engine means an engine incorporated into a locomotive or intended for incorporation into a locomotive.

Low hour engine means an engine during the interval between the time that normal assembly operations and adjustments are completed and the time that 300 additional operating hours have been accumulated (including hours accumulated during emission testing if performed).

Low idle speed means a speed which is less than normal idle speed, expressed as the number of revolutions of the crankshaft per unit of time, at which an engine can be set when not under load for purposes of propelling the locomotive.

Low mileage locomotive means a locomotive during the interval between the time that normal assembly operations and adjustments are completed and the time that either 10,000 miles of locomotive operation or 300 additional operating hours have been accumulated (including emission testing if performed).

Malfunction means a condition in which the operation of a component in a locomotive or locomotive engine occurs in a manner other than that specified by the certifying manufacturer or remanufacturer (e.g., as specified in the application for certification); or the operation of the locomotive or locomotive engine in that condition.

Manufacturer means an individual or entity engaged in the manufacturing or assembling of freshly manufactured locomotives or freshly manufactured locomotive engines; or the importing of locomotives or locomotive engines originally manufactured on or after January 1, 1973 and not remanufactured. (See §§92.1(c) and 92.209 for applicability of this term.)

Maximum rated horsepower means the maximum brake horsepower output of an engine.

Mechanical accessory horsepower means the sum of mechanical horsepower generated by an engine to supply accessories. Mechanical accessory horsepower does not include power supplied to the main alternator or generator, power used to circulate engine coolant or engine lubricant, or power used to supply fuel to the engine.

Methanol means a fuel that contains at least 50 percent methanol (methyl alcohol, (CH_3OH)) by volume.

Method of aspiration means the method whereby air for fuel combustion enters the engine (e.g., natural or turbocharged).

Model year means a calendar year; except where the Administrator determines a different production period

which includes January 1 of such calendar year.

Natural gas means the commercial product marketed as natural gas whose primary constituent is methane.

New locomotive or *new locomotive engine* means:

(1)(i) A locomotive or locomotive engine the equitable or legal title to which has never been transferred to an ultimate purchaser; or

(ii) A locomotive or locomotive engine which has been remanufactured, but has not been placed back into service.

(2) Where the equitable or legal title to a locomotive or locomotive engine is not transferred prior to its being placed into service, the locomotive or locomotive engine ceases to be new when it is placed into service.

(3) With respect to imported locomotives or locomotive engines, the term ''new locomotive'' or ''new locomotive engine'' means a locomotive or locomotive engine that is not covered by a certificate of conformity under this part at the time of importation, and that was manufactured or remanufactured after the effective date of the emission standards in this part which is applicable to such locomotive or engine (or which would be applicable to such locomotive or engine had it been manufactured or remanufactured for importation into the United States).

(4) Notwithstanding paragraphs (1) through (3) of this definition, locomotives and locomotive engines which were originally manufactured before January 1, 1973 and which have not been upgraded are not new.

(5) Notwithstanding paragraphs (1) through (3) of this definition, locomotives and locomotive engines which are owned by a small railroad and which have never been remanufactured into a certified configuration are not new.

Nonconforming locomotive or *nonconforming locomotive engine* means a locomotive or locomotive engine which is not covered by a certificate of conformity prior to importation or being offered for importation (or for which such coverage has not been adequately demonstrated to EPA); or a locomotive or locomotive engine which was originally covered by a certificate of conformity, but which is not in a certified configuration, or otherwise does not comply with the conditions of that certificate of conformity.

(NOTE: Domestic locomotives and locomotive engines which are not covered by a certificate of conformity prior to their introduction into U.S. commerce are considered to be noncomplying locomotives and locomotive engines.)

Non-locomotive-specific engine means an engine that is sold for and used in non-locomotive applications more than for locomotive applications.

Normal idle means relating to the idle throttle-notch position for locomotives that have one throttle-notch position, or the highest the idle throttle-notch position for locomotives that have two throttle-notch positions.

Opacity means the fraction of a beam of light, expressed in percent, which fails to penetrate a plume of smoke as measured and calculated under the provisions of subpart B of this part.

Original manufacture means the event of freshly manufacturing a locomotive or locomotive engine. The date of original manufacture is the date of final assembly; except as provided in § 92.11. Where a locomotive or locomotive engine is manufactured under § 92.11, the date of original manufacture is the date on which the final assembly of locomotive or locomotive engine was originally scheduled.

Original remanufacture means the first remanufacturing of a locomotive or locomotive engine at which the locomotive or locomotive engines is subject to the emission standards of this part.

Oxides of nitrogen means nitric oxide and nitrogen dioxide. Oxides of nitrogen are expressed quantitatively as if the nitric oxide were in the form of nitrogen dioxide (oxides of nitrogen are assumed to have a molecular weight equivalent to nitrogen dioxide).

Passenger locomotive means a locomotive designed and constructed for the primary purpose of propelling passenger trains, and providing power to the passenger cars of the train for such functions as heating, lighting and air conditioning.

Petroleum fuel means a fuel primarily derived from crude oil (e.g., gasoline or diesel fuel).

Power assembly means the components of an engine in which combustion of fuel occurs, and consists of the cylinder, piston and piston rings, valves and ports for admission of charge air and discharge of exhaust gases, fuel injection components and controls, cylinder head and associated components.

Primary fuel means that type of fuel (e.g., diesel fuel) that is consumed in the greatest quantity (mass basis) when the locomotive or locomotive engine is operated in use.

Produce means to manufacture or remanufacture. Where a certificate holder does not actually assemble the locomotives or locomotive engines that it manufactures or remanufactures, produce means to allow other entities to assemble locomotives or locomotive engines under the certificate holder's certificate.

Railroad means a commercial entity that operates locomotives to transport passengers or freight.

Rated horsepower means the maximum horsepower output of a locomotive engine in use.

Remanufacture means:

(1)(i) To replace, or inspect and qualify, each and every power assembly of a locomotive or locomotive engine, whether during a single maintenance event or cumulatively within a five year period; or

(ii) To upgrade a locomotive or locomotive engine; or

(iii) To convert a locomotive or locomotive engine to enable it to operate using a fuel other than it was originally manufactured to use; or

(iv) To install a remanufactured engine or a freshly manufactured engine into a previously used locomotive.

(2) *Remanufacture* also means the act of remanufacturing.

Remanufacture system or *remanufacturing system* means all components (or specifications for components) and instructions necessary to remanufacture a locomotive or locomotive engine in accordance with applicable requirements of this part.

Remanufactured locomotive means either a locomotive which is powered by a remanufactured locomotive engine, or a repowered locomotive.

Remanufactured locomotive engine means a locomotive engine which has been remanufactured.

Remanufacturer means an individual or entity that is engaged in the manufacture or assembly of remanufactured locomotives or locomotive engines, (including: Entities that design or produce the emission-related parts used in remanufacturing; entities that install parts in an existing locomotive or locomotive engine to remanufacture it; and entities that own or operate the locomotive or locomotive engine and provide specifications as to how an engine is to be remanufactured (i.e., specifying who will perform the work, when the work is to be performed, what parts are to be used, or how to calibrate the adjustable parameters of the engine)); or an importer of remanufactured locomotives or locomotive engines. (See §§92.1(c) and 92.209 for applicability of this term.)

Repower means replacement of the engine in a previously used locomotive with a freshly manufactured locomotive engine. Replacing a locomotive engine with a freshly manufactured locomotive engine in a locomotive that has a refurbished or reconditioned chassis such that less than 25 of the parts of the locomotive were previously used (as weighted by dollar value) is not repowering.

Repowered locomotive means a locomotive that has been repowered with a freshly manufactured engine.

Service life means the total life of a locomotive or locomotive engine. Service life begins when the locomotive or locomotive engine is originally manufactured and continues until the locomotive or locomotive engine is permanently removed from service.

Small railroad means a railroad that is classified by the Small Business Administration as a small business.

Small remanufacturer means a remanufacturer that is classified by the Small Business Administration as a small business.

Smoke means the matter in the engine exhaust which obscures the transmission of light.

Specified adjustable range means the range of allowable settings for an adjustable component specified by a certificate of conformity.

Specified by a certificate of conformity or *specified in a certificate of conformity* means stated or otherwise specified in a certificate of conformity or an approved application for certification.

Steam locomotive means a historic locomotive propelled by a steam engine.

Switch locomotive means a locomotive designed or used solely for the primary purpose of propelling railroad cars a short distance, and that is powered by an engine with a maximum horsepower rating of 2300 hp or less.

Test locomotive or *locomotive engine* means a locomotive or locomotive engine in a test sample.

Test sample means the collection of locomotives or locomotive engines selected from the population of an engine family for emission testing or auditing.

Throttle means the component, or components, which either directly or indirectly controls the fuel flow to the engine.

Throttle notch means a discrete throttle position for a locomotive with a limited number of throttle positions.

Throttle notch horsepower means the brake horsepower output of an engine corresponding to each throttle notch position, including dynamic-brake settings.

Throttle notch speed means the speed of the engine, expressed as the number of revolutions of the crankshaft per unit of time (e.g., rpm), corresponding to each throttle notch position, including dynamic-brake, and hotel power settings.

Tier 0 means relating to emission standards applicable to locomotives originally manufactured before January 1, 2002; or relating to such locomotives.

1 means relating to emission standards applicable to locomotives originally manufactured on or after January 1, 2002 and before January 1, 2005; or relating to such locomotives.

Tier 2 means relating to emission standards applicable to locomotives originally manufactured on or after January 1, 2005; or relating to such locomotives.

Total Hydrocarbon Equivalent means the sum of the carbon mass contributions of non-oxygenated hydrocarbons, alcohols and aldehydes, or other organic compounds that are measured separately as contained in a gas sample, expressed as gasoline-fueled vehicle hydrocarbons. The hydrogen-to-carbon ratio of the equivalent hydrocarbon is 1.85:1. Total Hydrocarbon Equivalent is abbreviated THCE.

Trading means the exchange of locomotive or locomotive engine emission credits between credit holders.

United States. United States includes the customs territory of the United States as defined in 19 U.S.C. 1202, and the Virgin Islands, Guam, American Samoa, and the Commonwealth of the Northern Mariana Islands.

Upgrade means to modify a locomotive or locomotive engine that was originally manufactured prior to January 1, 1973 (or a locomotive or locomotive engine that was originally manufactured on or after January 1, 1973, and that is not subject to the emission standards of this part), such that it is intended to comply with the Tier 0 standards. Upgrading is a type of remanufacturing.

Useful life means the period during which the locomotive engine is designed to properly function in terms of reliability and fuel consumption, without being remanufactured, specified as work output or miles. It is the period during which a new locomotive or locomotive engine is required to comply with all applicable emission standards.

Volatile liquid fuel means any liquid fuel other than diesel or biodiesel.

Voluntary emission recall means a repair, adjustment, or modification program voluntarily initiated and conducted by a manufacturer or remanufacturer to remedy any emission-related defect for which notification of locomotive or locomotive engine owners has been provided.

§ 92.3 Abbreviations.

The abbreviations of this section apply to all subparts of this part and have the following meanings:

ANSI—American National Standards Institute
API—American Petroleum Institute
ASTM—American Society for Testing and Materials
BHP—Brake horsepower
BSCO—Brake specific carbon monoxide
BSHC—Brake specific hydrocarbons
$BSNO_X$—Brake specific oxides of nitrogen
°C—Celsius

cfh—cubic feet per hour
cfm—cubic feet per minute
CFV—Critical flow venturi
CL—Chemiluminescence
CO—Carbon monoxide
CO_2—Carbon dioxide
cu in—cubic inch(es)
CVS—Constant volume sampler
EP—End point
EPA—Environmental Protection Agency
°F—Fahrenheit
FEL—Family emission limit
FID—Flame ionization detector
ft—foot or feet
g—gram(s)
gal—U.S. gallon
GC—Gas Chromatograph
h—hour(s)
H_2O—water
HC—hydrocarbon
HFID—Heated flame ionization detector
Hg—Mercury
hp—horsepower
IBP—Initial boiling point
in—inch(es)
K—Kelvin
kg—kilogram(s)
km—kilometer(s)
kPa—kilopascal(s)
lb—pound(s)
LPG—Liquified Petroleum Gas
m—meter(s)
max—maximum
mg—milligram(s)
mi—mile(s)
min—minute
ml—milliliter(s)
mm—millimeter
mph—miles per hour
mv—millivolt(s)
N_2—nitrogen
NDIR—Nondispersive infrared
NMHC—Non-methane hydrocarbons
NO—nitric oxide
NO_2—nitrogen dioxide
NO_x—oxides of nitrogen
No.—number
O_2—oxygen
pct—percent
PM—particulate matter
ppm—parts per million by volume
ppmC—parts per million, carbon
psi—pounds per square inch
psig—pounds per square inch gauge
°R—Rankin
rpm—revolutions per minute
s—second(s)
SAE—Society of Automotive Engineers
SI—International system of units (i.e., metric)
THCE—Total hydrocarbon equivalent
U.S.—United States
V—volt(s)
vs—versus
W—watt(s)
wt—weight

§92.4 Treatment of confidential information.

(a) Any manufacturer or remanufacturer may assert that some or all of the information submitted pursuant to this part is entitled to confidential treatment as provided by 40 CFR part 2, subpart B.

(b) Any claim of confidentiality must accompany the information at the time it is submitted to EPA.

(c) To assert that information submitted pursuant to this part is confidential, a person or manufacturer or remanufacturer must indicate clearly the items of information claimed confidential by marking, circling, bracketing, stamping, or otherwise specifying the confidential information. Furthermore, EPA requests, but does not require, that the submitter also provide a second copy of its submittal from which all confidential information has been deleted. If a need arises to publicly release nonconfidential information, EPA will assume that the submitter has accurately deleted the confidential information from this second copy.

(d) If a claim is made that some or all of the information submitted pursuant to this part is entitled to confidential treatment, the information covered by that confidentiality claim will be disclosed by EPA only to the extent and by means of the procedures set forth in 40 CFR part 2, subpart B.

(e) Information provided without a claim of confidentiality at the time of submission may be made available to the public by EPA without further notice to the submitter, in accordance with 40 CFR 2.204(c)(2)(i)(A).

§92.5 Reference materials.

(a) The documents in paragraph (b) of this section have been incorporated by reference. The incorporation by reference was approved by the Director of the Federal Register in accordance with 5 U.S.C. 552(a) and 1 CFR part 51. Copies may be inspected at U.S. EPA, OAR, 401 M St., SW., Washington, DC 20460, or at the Office of the Federal Register, 800 North Capitol Street, NW., suite 700, Washington, DC.

(b) The following paragraphs and tables set forth the material that has

been incorporated by reference in this part:

(1) *ASTM material.* The following table sets forth material from the American Society for Testing and Materials that has been incorporated by reference. The first column lists the number and name of the material. The second column lists the section(s) of the part, other than this section, in which the matter is referenced. The second column is presented for information only and may not be all inclusive. More recent versions of these standards may be used with advance approval of the Administrator. Copies of these materials may be obtained from American Society for Testing and Materials, 1916 Race St., Philadelphia, PA 19103. The table follows:

Document number and name	40 CFR part 92 reference
ASTM D 86–95, Standard Test Method for Distillation of Petroleum Products	§ 92.113
ASTM D 93–94, Standard Test Methods for Flash-Point by Pensky-Martens Closed Cup Tester	§ 92.113
ASTM D 287–92, Standard Test Method for API Gravity of Crude Petroleum and Petroleum Products (Hydrometer Method).	§ 92.113
ASTM D 445–94, Standard Test Method for Kinematic Viscosity of Transparent and Opaque Liquids (the Calculation of Dynamic Viscosity).	§ 92.113
ASTM D 613–95, Standard Test Method for Cetane Number of Diesel Fuel Oil	§ 92.113
ASTM D 976–91, Standard Test Method for Calculated Cetane Index of Distillate Fuels	§ 92.113
ASTM D 1319–95, Standard Test Method for Hydrocarbon Types in Liquid Petroleum Products by Fluorescent Indicator Adsorption.	§ 92.113
ASTM D 1945–91, Standard Test Method for Analysis of Natural Gas by Gas Chromatography	§ 92.113
ASTM D 2622–94, Standard Test Method for Sulfur in Petroleum Products by X-Ray Spectrometry	§ 92.113
ASTM D 5186–91, Standard Test Method for Determination of Aromatic Content of Diesel Fuels by Supercritical Fluid Chromatography.	§ 92.113
ASTM E 29–93a, Standard Practice for Using Significant Digits in Test Data to Determine Conformance with Specifications.	§§ 92.9, 92.305, 92.509

(2) *SAE material.* The following table sets forth material from the Society of Automotive Engineers that has been incorporated by reference. The first column lists the number and name of the material. The second column lists the section(s) of the part, other than this section, in which the matter is referenced. The second column is presented for information only and may not be all inclusive. Copies of these materials may be obtained from Society of Automotive Engineers International, 400 Commonwealth Dr., Warrendale, PA 15096–0001. The table follows:

Document number and name	40 CFR part 92 reference
SAE Paper 770141, Optimization of a Flame Ionization Detector for Determination of Hydrocarbon in Diluted Automotive Exhausts, by Glenn D. Reschke.	§ 92.119
SAE Recommended Practice J244, Measurement of Intake Air or Exhaust Gas Flow of Diesel Engines.	§ 92.108

(3) *ANSI material.* The following table sets forth material from the American National Standards Institute that has been incorporated by reference. The first column lists the number and name of the material. The second column lists the section(s) of the part, other than this section, in which the matter is referenced. The second column is presented for information only and may not be all inclusive. More recent versions of these standards may be used with advance approval of the Administrator. Copies of these materials may be obtained from American National Standards Institute, 11 West 42nd St., 13th Floor, New York, NY 10036. The table follows:

Document number and name	40 CFR part 92 reference
ANSI B109.1–1992, Diaphragm Type Gas Displacment Meters.	§ 92.117

§ 92.6 Regulatory structure.

This section provides an overview of the regulatory structure of this part.

(a) The regulations of this part 92 are intended to control emissions from in-use locomotives. Because locomotive chassis and locomotive engines are sometimes manufactured or remanufactured separately, the regulations in this part include some provisions that apply specifically to locomotive engines. However, the use of the term ''locomotive engine'' in the regulations

in this part does not limit in any manner the liability of any manufacturer or remanufacturer for the emission performance of a locomotive powered by an engine that it has manufactured or remanufactured.

(b) The locomotives and locomotive engines for which the regulations of this part (i.e., 40 CFR part 92) apply are specified by §92.1, and by the definitions of §92.2. The point at which a locomotive or locomotive engine becomes subject to the regulations of this part is determined by the definition of ''new locomotive or new locomotive engine'' in §92.2. Subpart J of this part contains provisions exempting certain locomotives or locomotive engines from the regulations in this part under special circumstances.

(c) To comply with the requirements of this part, a manufacturer or remanufacturer must demonstrate to EPA that the locomotive or locomotive engine meets the applicable standards of §§92.7 and 92.8, and all other requirements of this part. The requirements of this certification process are described in subparts C and D of this part.

(d) Subpart B of this part specifies procedures and equipment to be used for conducting emission tests for the purpose of the regulations of this part.

(e) Subparts E, F, G, and H of this part specify requirements for manufacturers and remanufacturers after certification; that is during production and use of the locomotives and locomotive engines.

(f) Subpart I of this part contains requirements applicable to the importation of locomotives and locomotive engines.

(g) Subpart K of this part contains requirements applicable to the owners and operators of locomotives and locomotive engines.

(h) Subpart L of this part describes prohibited acts and contains other enforcement provisions relating to locomotives and locomotive engines.

(i) Unless specified otherwise, the provisions of this part apply to all locomotives and locomotive engines subject to the emission standards of this part.

§92.7 General standards.

(a) Locomotives and locomotive engines may not be equipped with defeat devices.

(b) New locomotives fueled with a volatile fuel shall be designed to minimize evaporative emissions during normal operation, including periods when the engine is shut down.

(c)(1) Locomotive hardware for refueling locomotives fueled with a volatile fuel shall be designed so as to minimize the escape of fuel vapors.

(2) Hoses used to refuel gaseous-fueled locomotives shall not be designed to be bled or vented to the atmosphere under normal operating conditions.

(3) No valves or pressure relief vents shall be used on gaseous-fueled locomotives except as emergency safety devices, and these shall not operate at normal system operating flows and pressures.

(d) All new locomotives and new locomotive engines subject to any of the standards imposed by this subpart shall, prior to sale, introduction into service, or return to service, be designed to include features that compensate for changes in altitude to ensure that the locomotives or locomotive engines will comply with the applicable emission standards when operated at any altitude less than 7000 feet above sea level.

§92.8 Emission standards.

(a) *Exhaust standards.* Exhaust emissions from locomotives and locomotive engines, when measured in accordance with the provisions of Subpart B of this part, shall comply with both the applicable line-haul duty-cycle standards, and the applicable switch duty-cycle standards of paragraph (a)(1) (and/or the standards of paragraphs (a)(3) and (a)(4) of this section, as applicable) of this section, and the smoke standards of paragraph (a)(2) of this section. Emissions that do not exceed the standards comply with the standards.

(1) *Gaseous and particulate standards.* Gaseous and particulate emission standards are expressed as gram per brake horsepower hour (g/bhp-hr). Nonmethane hydrocarbon standards apply to locomotives and locomotive engines

fueled with natural gas, and any combination of natural gas and other fuels where natural gas is the primary fuel; total hydrocarbon equivalent standards apply to locomotives and locomotive engines fueled with an alcohol, and any combination of alcohol and other fuels where alcohol is the primary fuel. Total hydrocarbon standards apply to all other locomotives and locomotive engines; that is, those not fueled by natural gas or alcohol. The line-haul duty-cycle standards and switch duty-cycle standards apply to the respective cycle-weighted emission rates as calculated in subpart B of this part.

(i) *Tier 0.* The following locomotives (and the engines used in the following locomotives) are subject to the Tier 0 emission standards listed in Table A8–1 of this section: Locomotives manufactured on, or after, January 1, 1973, and before January 1, 2002; and upgraded locomotives manufactured prior to January 1, 1973. The standards apply when such a locomotive or locomotive engine is manufactured, remanufactured, or imported on or after January 1, 2002; except where the locomotive was previously certified to one or more FELs under subpart D of this part instead of the applicable standards, in which case, the applicable standards are replaced at each subsequent remanufacture by the FELs specified by the previous certificate. Example: a locomotive that is certified to a NO_X FEL of 8.0 g/bhp-hr must be recertified to a NO_X FEL of 8.0 g/bhp-hr at each subsequent remanufacture, except as allowed by paragraph (a)(4)(iii) of this section.

(ii) *Tier 1.* Locomotives and engines used in locomotives manufactured on, or after, January 1, 2002, and before January 1, 2005 are subject to the Tier 1 standards listed in Table A8–2 of this section. The standards apply when such a locomotive or locomotive engine is manufactured or imported, and each time it is remanufactured; except where the locomotive was previously certified to one or more FELs under subpart D of this part instead of the applicable standard, in which case, the standards are replaced at each subsequent remanufacture by the FELs specified by the previous certificate.

(iii) *Tier 2.* Locomotives and engines used in locomotives manufactured on, or after, January 1, 2005 are subject to the Tier 2 standards listed in Table A8–3 of this section. The standards apply when such a locomotive or locomotive engine is manufactured or imported, and each time it is remanufactured except where the locomotive was previously certified to one or more FELs under subpart D of this part instead of the applicable standard, in which case, the standards are replaced at each subsequent remanufacture by the FELs specified by the previous certificate.

(2) *Smoke standards.* The smoke opacity standards listed in Table A8–4 of this section apply, as specified in the table, to locomotives and locomotive engines subject to the Tier 0, Tier 1, or Tier 2 standards. Smoke emissions, when measured in accordance with the provisions of Subpart B of this part, shall not exceed the standards of Table A8–4 of this section.

(3) *Alternate standards.* In lieu of the CO and PM standards specified in paragraph (a)(1) of this section, manufacturers and remanufacturers may elect to comply with the alternate CO and PM standards listed in Table A8–5 of this section. Manufacturers and remanufacturers electing to comply with these alternate standards must comply with both the CO and PM standards listed in Table A8–5 of this section.

(4) *Averaging, banking and trading.* (i) In lieu of the NO_X and/or PM standards specified in paragraph (a)(1) of this section, manufacturers and remanufacturers may elect to include engine families in the averaging, banking, and trading program, the provisions of which are specified in subpart D of this part. The manufacturer or remanufacturer must set family emission limits (FEL) for the applicable duty-cycle. This FEL serves as the standard for that family.

(ii) When a locomotive is certified to an FEL other than the applicable standard, it must be recertified to that same FEL at all subsequent remanufactures, except as specified otherwise in paragraph (a)(4)(iii) of this section.

(iii) After a locomotive has been certified to any given FEL other than the

applicable standard, it may be recertified to a different FEL at a subsequent remanufacture, as allowed by subpart D of this part. For subsequent remanufactures (i.e. those remanufactures that occur after the recertification to a different FEL), the locomotive must be recertified to the FEL(s) and standards that were applicable to the locomotive during its previous useful life, except where specified otherwise by subpart D of this part.

(5) *Tables.* The tables referenced in paragraphs (a) (1) through (3) of this section follow:

TABLE A8–1—TIER 0 STANDARDS

[g/bhp-hr]

	Line-haul [1] cycle standard	Switch cycle standard
NO_X	9.5	14.0
PM	0.60	0.72
CO	5.0	8.0
THC	1.00	2.10
NMHC	1.00	2.10
THCE	1.00	2.10

[1] Line-haul standards do not apply to Tier 0 switch locomotives.

TABLE A8–2—TIER 1 STANDARDS

[g/bhp-hr]

	Line-haul cycle standard	Switch cycle standard
NO_X	7.4	11.0
PM	0.45	0.54
CO	2.2	2.5
THC	0.55	1.20
NMHC	0.55	1.20
THCE	0.55	1.20

TABLE A8–3—TIER 2 STANDARDS

[g/bhp-hr]

	Line-haul cycle standard	Switch cycle standard
NO_X	5.5	8.1
PM	0.20	0.24
CO	1.5	2.4
THC	0.30	0.60
NMHC	0.30	0.60
THCE	0.30	0.60

TABLE A8–4—SMOKE STANDARDS FOR LOCOMOTIVES

[Percent Opacity]

	Steady-state	30-sec peak	3-sec peak
Tier 0	30	40	50
Tier 1	25	40	50

TABLE A8–4—SMOKE STANDARDS FOR LOCOMOTIVES—Continued

[Percent Opacity]

	Steady-state	30-sec peak	3-sec peak
Tier 2	20	40	50

TABLE A8–5—ALTERNATE CO AND PM STANDARDS

[g/bhp-hr]

	Line-haul cycle		Switch cycle	
	CO	PM	CO	PM
Tier 0	10.0	0.30	12.0	0.36
Tier 1	10.0	0.22	12.0	0.27
Tier 2	10.0	0.10	12.0	0.12

(b) No crankcase emissions shall be discharged directly into the ambient atmosphere from any new locomotive or new locomotive engine. Discharge of crankcase emissions into the engine exhaust complies with this prohibition, provided crankcase emissions are measured and included with exhaust emissions. Compliance with this standard is required throughout the entire service life of the locomotive or locomotive engine.

(c) *Notch standards.* (1) Exhaust emissions from locomotives and locomotive engines shall not exceed the notch standards set forth in paragraph (c)(2) of this section, except as allowed in paragraph (c)(3) of this section, when measured using any test procedures under any test conditions.

(2) Notch standards for each pollutant for each notch are calculated from the certified notch emission rate as follows:

$$\text{Notch standard}=(E_x)\times(1.1+(1-E_{LHx}/\text{std}))$$

Where:

E_x=The deteriorated brake-specific emission rate (for pollutant x) for the notch (i.e., the brake-specific emission rate calculated under subpart B of this part, multplied by the deterioration factor in the application for certification expressed as a multiplicative deterioration factor); where x is NO_X, HC (or NMHC or THCE, as applicable), CO or PM.

E_{LHx}=The deteriorated line-haul duty-cycle weighted brake-specific emission rate for pollutant x, as reported in the application for certification.

std=The applicable line-haul duty-cycle standard, or the certified line-haul duty-cycle FEL for locomotives or locomotive

engines participating in the averaging, banking and trading program for NOx or PM.

(3) Where exhaust emissions exceed the notch standards set forth in paragraph (c)(2) of this section, the locomotive or locomotive engine is considered to be in compliance with such standards only if:

(i) The same emission controls are applied during the test conditions causing the noncompliance as were applied during certification test conditions (and to the same degree); or

(ii) The exceeding emissions result from a design feature that was described (including its effect on emissions) in the approved application for certification, and is necessary for safety or is otherwise allowed by this part.

§ 92.9 Compliance with emission standards.

(a) The general standards in § 92.7 and the emission standards in § 92.8 apply to the emissions from new locomotives and new locomotive engines for their useful life. The useful life is specified as MW-hrs and years, and ends when either of the values (MW-hrs or years) is exceeded.

(1) The minimum useful life in terms of MW-hrs is equal to the product of the rated horsepower multiplied by 7.50. The minimum useful life in terms of years is ten years. For locomotives or locomotive engines originally manufactured before January 1, 2000 and not equipped with MW-hr meters, the minimum useful life is equal to 750,000 miles or ten years, whichever is reached first.

(2) The certifying manufacturer or remanufacturer shall specify a longer useful life if the locomotive or locomotive engine is designed to last longer than the applicable minimum useful life. A manufacturer's or remanufacturer's recommended time to remanufacture which is longer than the minimum useful life is one indicator of a longer design life.

(3) Manufacturers and remanufacturers of non-locomotive-specific engines (as defined in § 92.2) may petition the Administrator prior to certification to allow a shorter useful life for an engine family containing only non-locomotive-specific engines. This petition must include the full rationale behind the request together with any other supporting evidence. Based on this or other information, the Administrator may allow a shorter useful life.

(4) Remanufacturers of locomotive or locomotive engine configurations that have been previously certified under paragraph (a)(3) of this section to a useful life that is shorter than the value specified in paragraph (a)(1) of this section may certify to that same useful life value without request.

(b) *Certification.* Certification is the process by which manufacturers and remanufacturers apply for and obtain certificates of conformity from EPA that allow the manufacturer or remanufacturer to introduce into commerce new locomotives and/or new locomotive engines for sale or use in the U.S.

(1)(i) Compliance with the applicable emission standards by an engine family must be demonstrated by the certifying manufacturer or remanufacturer before a certificate of conformity may be issued under § 92.208.

(A) Manufacturers shall demonstrate compliance using emission data, measured using the procedures specified in subpart B of this part, from a low mileage locomotive, or a development engine (that is equivalent in design to the locomotive engines being certified), or another low hour engine.

(B) Remanufacturers shall demonstrate compliance using emission data, measured using the procedures specified in subpart B of this part, from a low mileage remanufactured locomotive, or a development engine (that is equivalent in design to the locomotive engines being certified), or another low hour remanufactured engine that was remanufactured in the manner specified in the application for certification.

(ii) The emission values to compare with the standards shall be the emission values of a low mileage locomotive, or development engine, or low hour locomotive engine, adjusted by the deterioration factors developed in accordance with the provisions of paragraph (b)(2) of this section. Before any emission value is compared with the

standard, it shall be rounded, in accordance with ASTM E 29–93a (incorporated by reference at §92.5), to the same number of significant figures as contained in the applicable standard.

(2) Exhaust emission deterioration factors shall be determined by the certifying manufacturer or remanufacturer for each engine family. The manufacturer's or remanufacturer's determination is subject to the requirements of paragraph (b)(2)(iv) of this section. The deterioration factor relates emissions from low mileage or low hour data to emissions at the end of useful life. If certification data is obtained from a development engine, and the emissions performance of that engine is significantly different from a typical low hour engine, then the deterioration factors may be adjusted for the purpose of certification.

(i) A separate exhaust emission deterioration factor shall be established, as required, for compliance with applicable emission standards for HC, THCE, NMHC, CO, NO_X, particulate and smoke for each engine family.

(ii)(A) For locomotives or locomotive engines not utilizing aftertreatment technology (e.g., catalyst). For HC, THCE, NMHC, CO, NO_X, and PM, additive deterioration factors shall be used; that is, a deterioration factor that when added to the low mileage emission rate equals the emission rate at the end of useful life. However, if the deterioration factor supplied by the manufacturer or remanufacturer is less than zero, it shall be zero for the purposes of this section.

(B) For locomotives or locomotive engines utilizing aftertreatment technology (e.g., catalyst). For HC, THCE, NMHC, CO, NO_X, and PM, Multiplicative deterioration factors shall be used; that is deterioration factors that when multiplied by the low mileage emission rate equal the emission rate at the end of useful life. However, if the deterioration factor supplied by the manufacturer or remanufacturer is less than one, it shall be one for the purposes of this paragraph (b).

(C) For all locomotives and locomotive engines. For smoke, additive deterioration factors shall be used. However, if the deterioration factor supplied by the manufacturer or remanufacturer is less than zero, it shall be zero for the purposes of this paragraph (b).

(iii) In the case of a multiplicative exhaust emission deterioration factor, the factor shall be rounded to three places to the right of the decimal point in accordance with ASTM E 29–93a (incorporated by reference at §92.5). In the case of an additive exhaust emission deterioration factor, the factor shall be established to a minimum of two places to the right of the decimal in accordance with ASTM E 29–93a (incorporated by reference at §92.5).

(iv) Every deterioration factor must be, in the Administrator's judgement, consistent with emissions increases observed in-use based on emission testing of similar locomotives or locomotive engines. Deterioration factors that predict emission increases over the useful life of a locomotive or locomotive engine that are significantly less than the emission increases over the useful life observed from in-use testing of similar locomotives or locomotive engines shall not be used.

§92.10 Warranty period.

Warranties imposed by §92.1107 shall apply for at least the first third of the full useful life of the locomotive or locomotive engine, or for the same period during which the manufacturer or remanufacturer provides any other mechanical warranty, whichever is longer. A copy of the manufacturer's or remanufacturer's warranty shall be submitted with the application for certification.

§92.11 Compliance with emission standards in extraordinary circumstances.

The provisions of this section are intended to address problems that could occur near the date on which more stringent emission standards become effective, such as the transition from the Tier 1 standards to the Tier 2 standards on January 1, 2005.

(a) In appropriate extreme and unusual circumstances which are clearly outside the control of the manufacturer and which could not have been avoided by the exercise of prudence, diligence, and due care, the Administrator may permit a manufacturer, for

a brief period, to introduce into commerce locomotives which do not comply with the applicable emission standards if:

(1) The locomotives cannot reasonably be manufactured in such a manner that they would be able to comply with the applicable standards;

(2) The manufacture of the locomotives was substantially completed prior to the applicability date of the standards from which the manufacturer seeks relief;

(3) Manufacture of the locomotives was previously scheduled to be completed at such a point in time that locomotives would have been included in the previous model year, such that they would have been subject to less stringent standards, and that such schedule was feasible under normal conditions;

(4) The manufacturer demonstrates that the locomotives comply with the less stringent standards that applied to the previous model year's production described in paragraph (a)(3) of this section, as prescribed by subpart C of this part (i.e., that the locomotives are identical to locomotives certified in the previous model year);

(5) The manufacturer exercised prudent planning and was not able to avoid the violation and has taken all reasonable steps to minimize the extent of the nonconformity; and

(6) The manufacturer receives approval from EPA prior to introducing the locomotives into commerce.

(b) Any manufacturer seeking relief under this section shall notify EPA as soon as it becomes aware of the extreme or unusual circumstances.

(c)(1) Locomotives for which the Administrator grants relief under this section shall be included in the engine family for which they were originally intended to be included.

(2) Where the locomotives are to be included in an engine family that was certified to an FEL above the applicable standard, the manufacturer shall reserve credits to cover the locomotives covered by this section, and shall include the required information for these locomotives in the end-of-year report required by subpart D of this part.

(d) In granting relief under this section, the Administrator may also set other conditions as he/she determines to be appropriate, such as requiring payment of fees to negate an economic gain that such relief would otherwise provide to the manufacturer.

§ 92.12 Interim provisions.

Notwithstanding other provisions of this part, the following provisions apply as specified to locomotives and locomotive engines subject to the provisions of this part:

(a) *Tier 0 standards.* In addition to the requirements of § 92.8(a)(1)(i), the following new locomotives and new locomotive engines are subject to the Tier 0 emission standards of § 92.8. The requirements of this paragraph do not apply to passenger locomotives. The requirements of this paragraph (a) provide manufacturers of freshly manufactured locomotives two options for compliance. The first option is to comply with the requirements of paragraphs (a) (1) and (2) of this section, which has the effect of requiring compliance with Tier 0 standards on average beginning on January 1, 2001 for all freshly manufactured and remanufactured locomotives originally manufactured on or after January 1, 1994. The second option requires compliance with the requirements of paragraph (a)(3) of this section that the manufacturer make a remanufacturing system available at a reasonable cost for its primary model for the 1994 through 1997 production period prior to January 1, 2000, and to apply the same emission controls to its new production of similar locomotives. Manufacturers complying with paragraph (a)(3) of this section would be allowed to manufacture and remanufacture other locomotives without a certificate of conformity, prior to January 1, 2002, except as required by paragraph (a)(2)(ii) of this section. Manufacturers may comply with paragraph (a)(3) of this section through compliance with the provisions of paragraph (a)(5) of this section.

(1) *Freshly manufactured locomotives.* Except as provided in paragraph (a)(3) of this section, all freshly manufactured locomotives manufactured on or after January 1, 2001 must comply with the emission standards listed in Table

A8–1 of §92.8 and all other applicable requirements of this part.

(2) *Remanufactured locomotives*. The following locomotives (and engines used in the following locomotives) must comply with the emission standards listed in Table A8–1 of §92.8 and all other applicable requirements of this part:

(i) Locomotives originally manufactured on or after January 1, 1994, that are remanufactured on or after January 1, 2001; and

(ii) Locomotives originally manufactured on or after January 1, 1990 for which a remanufacturing system has been certified to Tier 0 standards and is available for use at reasonable cost.

(3) *New model exemption*. (i) Freshly manufactured locomotive models not introduced for widespread production prior to January 1, 1998 are exempt from the requirements of paragraph (a)(1) of this section provided the manufacturer of the locomotive:

(A) Has obtained a certificate of conformity and made available for use at reasonable cost before January 1, 2000, a remanufacturing system for its primary locomotive model (including its primary engine model) originally manufactured between January 1, 1994 and January 1, 1998; and

(B) Complies with the emission standards listed in Table A8–1 of §92.8 and all applicable requirements of this part for all freshly manufactured locomotives manufactured on or after January 1, 2000 that are similar to the primary model described in paragraph (a)(3)(i)(A) of this section.

(ii) New locomotives and locomotive engines that are manufactured and remanufactured by a manufacturer that complies with the requirements of paragraphs (a)(3)(i) (A) and (B) of this section, and that are not similar to the locomotive models identified in paragraphs (a)(3)(i) (A) and (B) of this section are exempt from the requirements of paragraphs (a)(1) and (a)(2)(i) of this section.

(4) Make available at a reasonable cost means to make a certified remanufacturing system available for use where:

(i) The total cost to the owner and user of the locomotive (including initial hardware, increased fuel consumption, and increased maintenance costs) during the useful life of the locomotive is less than $220,000; and

(ii) The initial hardware costs are reasonably related to the technology included in the remanufacturing system and are less than $50,000 for 2-stroke locomotives and 4-stroke locomotives equipped with split cooling systems, or $125,000 for 4-stroke locomotives not equipped with split cooling systems; and

(iii) The system will not increase fuel consumption by more than 3 percent; and

(iv) The remanufactured locomotive will have reliability throughout its useful life that is similar to the reliability the locomotive would have had if it had been remanufactured without the certified remanufacture system.

(5)(i) Instead of the provisions of paragraph (a)(3) of this section, a manufacturer may comply with the emissions standards listed in Table A8–1 of §92.8 and all other applicable requirements of this part with respect to any combination of locomotive models that are manufactured or remanufactured on or after January 1, 2000, provided that the manufacturer has demonstrated to the satisfaction of the Administrator that such locomotives will produce greater emissions reductions than would otherwise occur through compliance with paragraph (a)(3) of this section.

(ii) New locomotives and locomotive engines that are manufactured and remanufactured by a manufacturer that complies with the requirements of paragraph (a)(5)(i) of this section, and that are not similar to the locomotive models identified in paragraph (a)(5)(i) of this section, are exempt from the requirements of paragraphs (a)(1) and (a)(2)(i) of this section.

(b) *Production line and in-use testing*. (1) The requirements of subpart F of this part (i.e., production line testing) do not apply prior to January 1, 2002.

(2) The requirements of subpart F of this part (i.e., production line testing) do not apply to small remanufacturers prior to January 1, 2007.

(3) The requirements of subpart G of this part (i.e., in-use testing) only apply for locomotives and locomotive

engines that become new on or after January 1, 2002.

(4) For locomotives and locomotive engines that are covered by a small business certificate of conformity, the requirements of subpart G of this part (i.e., in-use testing) only apply for locomotives and locomotive engines that become new on or after January 1, 2007.

(c) *Small business certificates of conformity*. (1) Prior to January 1, 2007, small remanufacturers (as defined in § 92.2) may use a modified version of the federal test procedures of subpart B of this part to obtain certificates of conformity. Such certificates are valid only for production that occurs prior to January 1, 2007. Specifically, the following modifications are allowed:

(i) Measurement of HC, CO, and PM may be omitted;

(ii) Dynamometers are not required to meet the specifications of subpart B of this part, provided their design and use is consistent with good engineering practice;

(iii) Other modifications that are necessary because of excessive costs or technical infeasibility may be approved by the Administrator prior to the start of testing.

(2)(i) Small remanufacturers may use test procedures other than those specified in subpart B of this part or in paragraph (c)(1) of this section to obtain certificates of conformity, provided that the test procedures are consistent with good engineering practice, and are approved by the Administrator prior to the start of testing. Such certificates are valid only for production that occurs prior to January 1, 2007.

(ii) The total number of locomotives and locomotive engines that may be remanufactured under a certificate of conformity issued based on the testing described in paragraph (c)(2)(i) of this section shall be subject to the following annual limits for each individual remanufacturer: No more than 300 units in 2003, no more than 200 units in 2004, no more than 100 units in 2005, no more than 50 units in 2006. These sales limits apply to the combined number of locomotives and locomotive engines remanufactured within the calendar year that are covered by an individual remanufacturer's certificates issued under paragraph (c)(2)(i) of this section.

(3) Upon request, and prior to January 1, 2007, the Administrator may modify other certification requirements, as appropriate, for small remanufacturers.

(4) Remanufacturers certifying under this paragraph (c) shall provide along with their application for certification a brief engineering analysis describing the emission control technology to be incorporated in the remanufactured locomotive or locomotive engine, and demonstrating that such controls will result in compliance with the applicable standards.

(d) *Early banking of emission credits*. (1) Consistent with the provisions of subpart D of this part, NOx and PM emission credits may be generated from Tier 0 locomotives and locomotive engines prior to the applicable effective compliance date of the Tier 0 standard (i.e., the effective compliance date in § 92.8(a)(1)(i) or the effective compliance dates of paragraph (a) of this section, as applicable), relative to baseline emission rates.

(2)(i) Credits generated under this paragraph (d) that are granted or transferred to the owner or primary operator of the locomotives or locomotive engines generating credits may be used without restriction.

(ii) Credits generated under this paragraph (d) that are not granted or transferred to the owner or primary operator of the locomotives or locomotive engines generating credits may not be used for compliance with the Tier 0 standards for 2002 or later model years.

(3)(i) Prior to January 1, 2000, the provisions of this paragraph (d) apply to all locomotives and locomotive engines.

(ii) During the period January 1, 2000 through December 31, 2001, the provisions of this paragraph (d) apply only to engine families that include only locomotives and/or locomotive engines originally manufactured prior to January 1, 1990.

(iii) The provisions of this paragraph (d) other than the provisions of paragraph (d)(2) of this section do not apply

to any locomotives and locomotive engines manufactured or remanufactured on or after January 1, 2002.

(4)(i) NO_X credits generated under this paragraph (d) shall be calculated as specified in § 92.305, except that the applicable standard shall be replaced by:

(A) 10.5 g/bhp-hr for the line-haul cycle standards, and 14.0 g/bhp-hr for the switch standards; or

(B) For remanufactured locomotives, a measured baseline emission rate for the configuration with the lowest NO_X emission rate in the applicable engine family that is approved in advance by the Administrator.

(ii) PM credits generated under this paragraph (d) shall be calculated as specified in § 92.305, except that the applicable standard shall be replaced by:

(A) 0.20 g/bhp-hr for the line-haul cycle standards, and 0.24 g/bhp-hr for the switch standards; or

(B) For remanufactured locomotives, a measured baseline emission rate for the configuration with the lowest NO_X emission rate in the applicable engine family that is approved in advance by the Administrator.

(iii) The proration factor for all credits generated under this paragraph (d) shall be 0.143.

(5) Locomotives and locomotive engines generating credits under this paragraph (d) must meet all applicable requirements of this part.

(e) *Particulate notch standards.* For model year 2006 and earlier locomotives, the particulate notch standard shall be calculated as:

$$\text{Notch standard} = (E_X) \times (1.2 + (1 - E_{LHx}/\text{std}))$$

(f) *Passenger locomotives.* Passenger locomotives originally manufactured before January 1, 2002 are exempt from the requirements and prohibitions of this part for model years through 2006. New passenger locomotives and locomotive engines produced on or after January 1, 2007 shall comply with all applicable requirements of this part.

Subpart B—Test Procedures

§ 92.101 Applicability.

Provisions of this subpart apply to tests performed by the Administrator, certificate holders, other manufacturers and remanufacturers of locomotives or locomotive engines, railroads (and other owners and operators of locomotives), and their designated testing laboratories. This subpart contains gaseous emission test procedures, particulate emission test procedures, and smoke test procedures for locomotives and locomotive engines.

§ 92.102 Definitions and abbreviations.

The definitions and abbreviations of subpart A of this part apply to this subpart. The following definitions and abbreviations, as well as those found in § 92.132 (Calculations), also apply:

Accuracy means the difference between the measured value and the true value, where the true value is determined from NIST traceable measurements where possible, or otherwise determined by good engineering practice.

Calibration means the act of calibrating an analytical instrument using known standards.

Calibration gas means a gas of known concentration which is used to establish the response curve of an analyzer.

Good engineering practice means those methods and practices which the Administrator determines to be consistent with scientific and engineering principles.

Hang-up refers to the process of hydrocarbon molecules being adsorbed, condensed, or by any other method removed from the sample flow prior to reaching the instrument detector. It also refers to any subsequent desorption of the molecules into the sample flow when they are assumed to be absent.

Parts per million, carbon or *ppmC* means the concentration of an organic compound in a gas expressed as parts per million (by volume or by moles) multiplied by the number of carbon atoms in a molecule of that compound.

Precision means the standard deviation of replicated measurements, or one-half of the readability, whichever is greater; except where explicitly noted otherwise.

Readability means the smallest difference in measured values that can be detected. For example, the readability for a digital display with two decimal places would be 0.01.

Span gas means a gas of known concentration which is used routinely to set the output level of an analyzer.

Standard conditions and *standard temperature and pressure* mean 68 °F (20 °C) and 29.92 in Hg. (101.3 kPa).

§ 92.103 Test procedures; overview.

(a) This subpart contains procedures for exhaust emission tests of locomotives and locomotive engines. The procedures specified here are intended to measure brake-specific mass emissions of organic compounds (hydrocarbons for locomotives using petroleum diesel fuel), oxides of nitrogen, particulates, carbon monoxide, carbon dioxide, and smoke in a manner representative of a typical operating cycle.

(b)(1) The sampling systems specified in this subpart are intended to collect representative samples for analysis, and minimize losses of all analytes.

(i) For gaseous emissions, a sample of the raw exhaust is collected directly from the exhaust stream and analyzed during each throttle setting.

(ii) Particulates are collected on filters following dilution with ambient air of a separate raw exhaust sample.

(2) Analytical equipment is identical for all fuel types, with the exception of the systems used to measure organics (*i.e.*, hydrocarbons, alcohols, and aldehydes); diesel-fueled and biodiesel-fueled locomotives *Parts per million* and locomotive engines require a heated, continuous hydrocarbon detector; natural gas-fueled locomotives and locomotive engines require a continuous hydrocarbon detector and a methane detector; alcohol-fueled locomotives and locomotive engines require a heated hydrocarbon detector, alcohol sampling and detection systems, and aldehyde sampling and detection systems. Necessary equipment and specifications appear in §§ 92.105 through 92.111.

(3) Fuel specifications for emission testing are specified in § 92.113. Analytical gases are specified in § 92.112.

(c) The power produced by the engine is measured at each throttle setting.

(d) The fuel flow rate for each throttle setting is measured in accordance with § 92.107.

(e) Locomotives and locomotive engines are tested using the test sequence as detailed in §§ 92.124 and 92.126.

(f) Alternate sampling and/or analytical systems may be used if shown to yield equivalent results, and if approved in advance by the Administrator. Guidelines for determining equivalency are found in Appendix IV of this part.

(g) At the time of the creation of this part, essentially all locomotives and locomotive engines subject to the standards of this part were designed to use diesel fuel. Therefore, the testing provisions of this subpart focus primarily on that fuel. Some provisions for fuels other than diesel are also included. If a manufacturer or remanufacturer of locomotives or locomotive engines, or a user of locomotives, or other party wishes or intends to use a fuel other than diesel in locomotives or locomotive engines, it shall notify the Administrator, who shall specify those changes to the test procedures that are necessary for the testing to be consistent with good engineering practice. The changes made under this paragraph (g) shall be limited to:

(1) Exhaust gas sampling and analysis;

(2) Test fuels; and

(3) Calculations.

§ 92.104 Locomotive and engine testing; overview.

(a) The test procedures described here include specifications for both locomotive testing and engine testing. Unless specified otherwise in this subpart, all provisions apply to both locomotive and engine testing.

(b)(1) The test procedures for engine testing are intended to produce emission measurements that are essentially identical to emission measurements produced during locomotive testing using the same engine configuration. The following requirements apply for all engine tests:

(i) Engine speed and load for each mode shall be within 2 percent of the speed and load of the engine when it is operated in the locomotive.

(ii) The temperature of the air entering the engine after any charge air cooling shall be within 5 °F of the typical intake air temperature when the

engine is operated in the locomotive under similar ambient conditions. Auxiliary fan(s) may be used to maintain engine cooling during operation on the dynamometer.

(iii) The engine air inlet system used during testing shall have an air inlet restriction within 1 inch of water of the upper limit of a typical engine as installed with clean air filters, as established by the manufacturer or remanufacturer for the engine being tested.

(2) Testers performing engine testing under this subpart shall not use test procedures otherwise allowed by the provisions of this subpart where such procedures are not consistent with good engineering practice and the regulatory goal specified in paragraph (b)(1) of this section.

(c) Provisions that specify different requirements for locomotive and/or engine testing are described in §§ 92.106, 92.108(a) and (b)(1), 92.111(b)(2) and (c), 92.114(a)(2)(ii), (b)(3)(ii), (c)(2)(iii)(A) and (d), 92.115(c), 92.116, 92.123(a)(2) and (b), 92.124(d), 92.125(a) and (b), 92.126(a)(7)(iii)(A).

§ 92.105 General equipment specifications.

(a) *Chart recorders.* (1) The recommended minimum chart speed for gaseous measurements is 1 cm per minute. (Higher chart speeds are required for smoke measurements during the acceleration phases of the test sequence.)

(2) All chart recorders (analyzers, torque, rpm, etc.) shall be provided with automatic markers which indicate ten second intervals. Preprinted chart paper (ten second intervals) may be used in lieu of the automatic markers provided the correct chart speed is used. (Markers which indicate 1 second intervals are required for smoke measurements during the acceleration phases of the test sequence.)

(b) *Automatic data collection.* (1) In lieu of the use of chart recorders, automatic data collection equipment may be used to record all required data. The automatic data collection equipment must be capable of sampling at least two records per second.

(2) Other means may be used provided they produce a permanent visual data record of a quality equal to or better than those required by this subpart (e.g., tabulated data, traces, or plots).

(c) *Temperature measurements.* (1) The following temperature measurements shall be accurate to within 1.0 °F (0.6 °C):

(i) Temperature measurements used in calculating the engine intake humidity;

(ii) The temperature of the fuel, in volume measuring flow rate devices;

(iii) The temperature of the sample within the water trap(s);

(iv) Temperature measurements used to correct gas volumes (e.g., to standard conditions) or to calculate mass or moles of a sample.

(2) All other temperature measurements shall be accurate within 3.0 °F (1.7 °C).

(d) *Electrical measurements.* (1) Voltmeters shall have accuracy and precision of 1 percent of point or better.

(2) Ammeters shall have accuracy and precision of 1 percent of point or better.

(3) Wattmeters shall have accuracy and precision of 1 percent of point or better.

(4) Instruments used in combination to measure engine power output shall comply with the requirements of § 92.106.

(e) *Pressure measurements.* (1) Gauges and transducers used to measure any pressures used to correct gas volumes (e.g., to standard conditions) or to calculate mass or moles of a sample shall have an accuracy and precision of 0.1 percent of absolute pressure at point or better.

(2) Gauges and transducers used to measure any other pressures shall have an accuracy and precision of 1 percent of absolute pressure at point or better.

§ 92.106 Equipment for loading the engine.

For purposes of placing the required load on the engine during an emissions test, either the equipment specified in paragraph (a) of this section, or the equipment specified in paragraph (b) of this section may be used.

(a) *Locomotive testing.* (1) The equipment required for loading the locomotive engine-alternator/generator assembly electrically, and for measurement of the electrical power output from the alternator/generator consists of the following, either in total or in part: electrical resistance load bank; fans or other means for cooling of the load bank; wattmeter, including phase angle compensation; meter(s) for measurement of the current through the load bank (a calibrated electrical shunt and voltmeter is allowed for current measurement); meter(s) to measure the voltage across the load bank; and electrical cable to connect the alternator/generator to the load bank. Many locomotives are equipped with an internal electrical resistance load bank and fans for cooling of the load bank; when so equipped, the locomotive load bank may be used for purposes of loading the engine during emissions tests.

(2) The combination of instruments (meters) used to measure engine or alternator/generator power output (wattmeter, ammeter, voltmeter) shall have accuracy and precision such that the accuracy of the measured alternator/generator power out is better than:

(i) 2 percent of point at all power settings except idle and dynamic brake; and

(ii) Less accuracy and precision is allowed at idle and dynamic brake, consistent with good engineering practice. Equipment with accuracy or precision worse than 20 percent of point is not allowed.

(3) The efficiency curve for the alternator/generator, shall specify the efficiency at each test point. The manufacturer or remanufacturer shall provide EPA with a detailed description of the procedures used to establish the alternator/generator efficiency.

(b) *Engine testing.* (1) For engine testing using a dynamometer, the engine dynamometer system must be capable of controlling engine torque and speed simultaneously under steady speed operation, during accelerations where the rate of change in torque and speed is representative of those changes which occur when the engine is operating in a locomotive. It must also be capable of performing the test sequence described in this subpart. In addition to these general requirements, the engine or dynamometer readout signals for speed and torque shall meet the following accuracy specifications:

(i) Engine speed readout shall be accurate to within ±2 percent of the absolute standard value, as defined in § 92.116 of this part.

(ii) Engine flywheel torque readout shall be accurate to either within ±3 percent of the NIST ''true'' value torque, or the following accuracies, whichever provides the most accurate readout:

(A) ±20 ft.-lbs. of the NIST ''true'' value if the full scale value is 9000 ft.-lbs. or less.

(B) ±30 ft.-lbs., of the NIST ''true'' value if the full scale value is greater than 9000 ft.-lbs.

(C) *Option.* Internal dynamometer signals (i.e., armature current, etc.) may be used for torque measurement provided that it can be shown that the engine flywheel torque during the test sequence conforms to the accuracy specifications in paragraph (b)(1)(ii)(A) or (b)(1)(ii)(B) of this section. Such a measurement system must include compensation for increased or decreased flywheel torque due to the armature inertia during accelerations between throttle notch (test mode) settings in the test.

(2) For engine testing using a locomotive alternator/generator instead of a dynamometer, the equipment used shall comply with the requirements of paragraph (a) of this section.

§ 92.107 Fuel flow measurement.

(a) *Fuel flow measurement for locomotive and engine testing.* The rate of fuel consumption by the engine must be measured with equipment conforming to the following:

(1) The fuel flow rate measurement instrument must have a minimum accuracy of ±2 percent of measurement flow rate for each measurement range used. An exception is allowed at idle where the minimum accuracy is ±10 percent of measured flow rate for each measurement range used. The measurement instrument must be able to comply with this requirement with an averaging time of one minute or less, except for idle, dynamic brake, and

notches 1 and 2 where the instrument must be able to comply with this requirement with an averaging time of three minutes or less.

(2) The controlling parameters are the elapsed time measurement of the event and the weight or volume measurement. Restrictions on these parameters are:

(i) The error in the elapsed time measurement of the event must not be greater than 1 percent of the absolute event time. This includes errors in starting and stopping the clock as well as the period of the clock.

(ii) If the mass of fuel consumed is measured by discrete weights, then the error in the actual weight of the fuel consumed must not be greater than ±1 percent of the measuring weight. An exception is allowed at idle, where the error in the actual weight of the fuel consumed must not be greater than ±2 percent of the measuring weight.

(iii) If the mass of fuel consumed is measured electronically (load cell, load beam, etc.), the error in the actual weight of fuel consumed must not be greater than ±1 percent of the full-scale value of the electronic device.

(iv) If the mass of fuel consumed is measured by volume flow and density, the error in the actual volume consumed must not be greater than ±1 percent of the full-scale value of the volume measuring device.

(3) For devices that have varying mass scales (electronic weight, volume, density, etc.), compliance with the requirements of paragraph (a)(1) of this section may require a separate flow measurement system for low flow rates.

(b) *Calibration*. Fuel flow rate measurement devices shall be calibrated against an independent measurement of the total mass of fuel dispensed during a fixed amount of time in accordance with the following provisions:

(1) Measurement of the total mass shall have an accuracy and precision of 1 percent of point, or better.

(2) Fuel measurements shall be performed for at least 10 flow rates evenly distributed over the entire range of fuel flow rates used during testing.

(3) For each flow rate, either the total mass of fuel dispense must exceed 5.0 kilograms (11.0 pounds), or the length of time during which the fuel is dispensed must exceed 30 minutes. In all cases, the length of time during which fuel is dispensed must be at least 180 seconds.

§ 92.108 Intake and cooling air measurements.

(a) *Intake air flow measurement*. Measurement of the flow rate of intake air into the engine is allowed for engine testing, but not required. When it is measured, the measurement technique shall conform to the following:

(1) The air flow measurement method used must have a range large enough to accurately measure the air flow over the engine operating range during the test. Overall measurement accuracy must be ±2 percent of full-scale value of the measurement device for all modes except idle. For idle, the measurement accuracy shall be ±5 percent or less of the full-scale value. The Administrator must be advised of the method used prior to testing.

(2) Corrections to the measured air mass flowrate shall be made when an engine system incorporates devices that add or subtract air mass (air injection, bleed air, etc.). The method used to determine the air mass from these devices shall be approved by the Administrator.

(3) Measurements made in accordance with SAE recommended practice J244 (incorporated by reference at § 92.5) are allowed.

(b) *Humidity and temperature measurements*. (1) Air that has had its absolute humidity altered is considered humidity-conditioned air. For this type of intake air supply, the humidity measurements must be made within the intake air supply system, and after the humidity conditioning has taken place.

(2) Humidity measurements for nonconditioned intake air supply systems shall be made as closely as possible to the point at which the intake air stream enters the locomotive, or downstream of that point.

(3) Temperature measurements of engine intake air, engine intake air after compression and cooling in the charge air cooler(s) (engine testing only), and air used to cool the charge air after compression, and to cool the engine shall be made as closely as possible to

obtain accurate results based on engineering judgement. Measurement of ambient temperature for locomotive testing shall be made within 48 inches of the locomotive, at a location that minimizes the effect of heat generated by the locomotive on the measured temperature.

(4) Temperature measurements shall comply with the requirements of § 92.105(c).

(5) Humidity measurements shall be accurate within 2 percent of the measured absolute humidity.

§ 92.109 Analyzer specifications.

(a) *General analyzer specifications.*—(1) *Analyzer response time.* Analyzers for THC, CO_2, CO, and NO_X must respond to an instantaneous step change at the entrance to the analyzer with a response equal to 95 percent of that step change in 6.0 seconds or less on all ranges used. The step change shall be at least 60 percent of full-scale chart deflection. For NO_X analyzers using a water trap, the response time increase due to the water trap and associated plumbing need not be included in the analyzer response time.

(2) *Precision.* The precision of the analyzers for THC, CO_2, CO, and NO_X must be no greater than ±1 percent of full-scale concentration for each range used above 155 ppm (or ppmC), or ±2 percent for each range used below 155 ppm (or ppmC). The precision is defined as 2.5 times the standard deviation(s) of 10 repetitive responses to a given calibration or span gas.

(3) *Noise.* The analyzer peak-to-peak response to zero and calibration or span gases over any 10-second period shall not exceed 2 percent of full/scale chart deflection on all ranges used.

(4) *Zero drift.* For THC, CO_2, CO, and NO_X analyzers, the zero-response drift during a 1-hour period shall be less than 2 percent of full-scale chart deflection on the lowest range used. The zero-response is defined as the mean response including noise to a zero-gas during a 30-second time interval.

(5) *Span drift.* For THC, CO_2, CO, and NO_X analyzers, the span drift during a 1-hour period shall be less than 2 percent of full-scale chart deflection on the lowest range used. The analyzer span is defined as the difference between the span-response and the zero-response. The span-response is defined as the mean response including noise to a span gas during a 30-second time interval.

(b) *Carbon monoxide and carbon dioxide analyzer specifications.* (1) Carbon monoxide and carbon dioxide measurements are to be made with nondispersive infrared (NDIR) analyzers.

(2) The use of linearizing circuits is permitted.

(3) The minimum water rejection ratio (maximum CO_2 interference) as measured in § 92.120(a) shall be:

(i) For CO analyzers, 1000:1.

(ii) For CO_2 analyzers, 100:1.

(4) The minimum CO_2 rejection ratio (maximum CO_2 interference) as measured in § 92.120(b) for CO analyzers shall be 5000:1.

(5) *Zero suppression.* Various techniques of zero suppression may be used to increase readability, but only with prior approval by the Administrator.

(6) Option: if the range of CO concentrations encountered during the different test modes is too broad to allow accurate measurement using a single analyzer, then multiple CO analyzers may be used.

(c) *Hydrocarbon analyzer specifications.* (1) Hydrocarbon measurements are to be made with a heated flame ionization detector (HFID) analyzer. An overflow sampling system is recommended but not required. (An overflow system is one in which excess zero gas or span gas spills out of the probe when zero or span checks of the analyzer are made.

(i) *Option.* A non-heated flame ionization detector (FID) that measures hydrocarbon emissions on a dry basis is permitted for petroleum fuels other than diesel and biodiesel; Provided, that equivalency is demonstrated to the Administrator prior to testing. With the exception of temperatures, all specifications contained in Subpart B of this part apply to the optional system.

(ii) The analyzer shall be fitted with a constant temperature oven housing the detector and sample-handling components. It shall maintain temperature with 3.6 °F (2 °C) of the set point. The detector, oven, and sample-handling components within the oven shall be

suitable for continuous operation at temperatures to 395 °F (200 °C).

(iii) Fuel and burner air shall conform to the specifications in § 92.112(e).

(iv) The percent of oxygen interference must be less than 3 percent, as specified in § 92.119(3).

(v) *Premixed burner air*. (A) For diesel and biodiesel fueled engines, premixing a small amount of air with the HFID fuel prior to combustion within the HFID burner is not recommended as a means of improving oxygen interference (%O_2I). However, this procedure may be used if the engine manufacturer demonstrates on each basic combustion system (i.e., four-cycle direct injection, two-cycle direct injection, four-cycle indirect injection, etc.) that an HFID using this procedure produces comparable results to an HFID not using this procedure. These data must be submitted to the Administrator for his/her approval prior to testing.

(B) For engines operating on fuels other than diesel or biodiesel, premixing burner air with the HFID fuel is not allowed.

(2) *Methane analyzer*. The analytical system for methane consists of a gas chromatograph (GC) combined with a flame ionization detector (FID).

(3) *Alcohols and Aldehydes*. The sampling and analysis procedures for alcohols and aldehydes, where applicable, shall be approved by the Administrator prior to the start of testing. Procedures consistent with the general requirements of 40 CFR Part 86 for sampling and analysis of alcohols and aldehydes emitted by on-highway alcohol-fueled engines, and consistent with good engineering practice are allowed.

(4) Other methods of measuring organics that are shown to yield equivalent results can be used upon approval of the Administrator prior to the start of testing.

(d) *Oxides of nitrogen analyzer specifications*. (1) Oxides of nitrogen are to be measured with a chemiluminescence (CL) analyzer.

(i) The NO_X sample must be heated per § 92.114 up to the NO_2 to NO converter.

(ii) For high vacuum CL analyzers with heated capillary modules, supplying a heated sample to the capillary module is sufficient.

(iii) The NO_2 to NO converter efficiency shall be at least 90 percent.

(iv) The CO_2 quench interference must be less than 3.0 percent as measured in § 92.121(a).

§ 92.110 Weighing chamber and microbalance.

(a) *Ambient conditions*—(1) *Temperature*. The temperature of the chamber (or room) in which the particulate filters are conditioned and weighed shall be maintained at a measured temperature between 19 °C and 25 °C during all filter conditioning and weighing.

(2) *Humidity*. The relative humidity of the chamber (or room) in which the particulate filters are conditioned and weighed shall be 45±8 percent during all filter conditioning and weighing. The dew point shall be 6.4 to 12.4 °C.

(b) *Weighing balance specifications*. The microbalance used to determine the weights of all filters shall have a precision (standard deviation) of no more than 20 micrograms and readability down to 10 micrograms or lower.

(c) *Reference filters*. The chamber (or room) environment shall be free of any ambient contaminants (such as dust) that would settle on the particulate filters during their stabilization. It is required that at least two unused reference filters remain in the weighing room at all times in covered (to reduce dust contamination) but unsealed (to permit humidity exchange) petri dishes.

(1) These reference filters shall be placed in the same general area as the sample filters. These reference filters shall be weighed within 4 hours of, but preferably at the same time as, the sample filter weighings.

(2) If the average weight of the reference filters changes between sample filter weighings by ±5.0 percent (±7.5 if the filters are weighed in pairs) or more of the target nominal filter loading (the recommended nominal loading is 0.5 milligrams per 1075 square millimeters of stain area), then all sample filters in the process of stabilization shall be discarded and the emissions tests repeated.

(3) If the average weight of the reference filters decreases between sample

filter weighings by more than 1.0 percent but less than 5.0 percent of the nominal filter loading then the manufacturer or remanufacturer has the option of either repeating the emissions test or adding the average amount of weight loss to the net weight of the sample.

(4) If the average weight of the reference filters increases between sample filter weighing by more than 1.0 percent but less than 5.0 percent of the nominal filter loading, then the manufacturer or remanufacturer has the option of either repeating the emissions test or accepting the measured sample filter weight values.

(5) If the average weight of the reference filters changes between sample filter weighings by not more than ±1.0 percent, then the measured sample filter weights shall be used.

(6) The reference filters shall be changed at least once a month, but never between clean and used weighings of a given sample filter. More than one set of reference filters may be used. The reference filters shall be the same size and material as the sample filters.

§ 92.111 Smoke measurement system.

(a) *Schematic drawing.* Figure B111–1 of this section is a schematic drawing of the optical system of the light extinction meter, as follows:

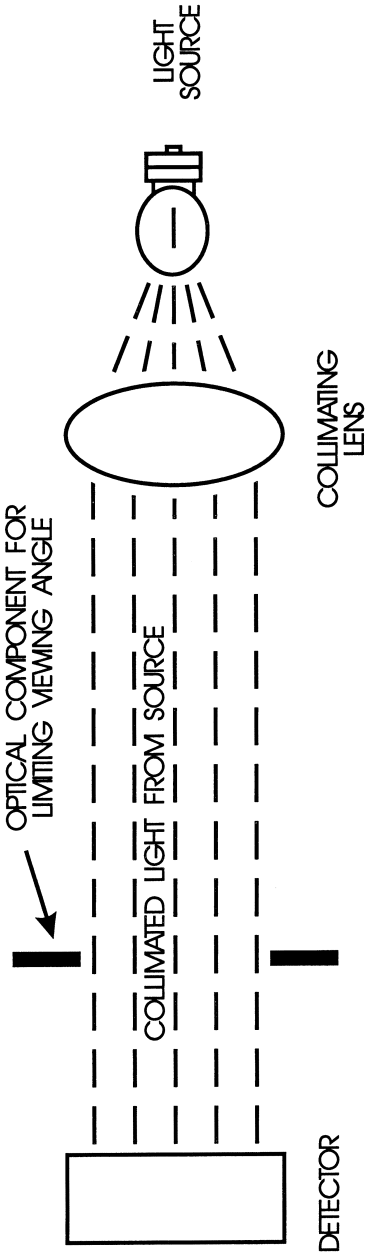

Figure B111-1 SMOKEMETER OPTICAL SYSTEM (SCHEMATIC)

(b) *Equipment*. The following equipment shall be used in the system.

(1) *Adapter*. The smokemeter optical unit may be mounted on a fixed or movable frame. The normal unrestricted shape of the exhaust plume shall not be modified by the adaptor, the meter, or any ventilation system

used to remove the exhaust from the test site. Distortion due to the gaseous or particulate sample probes, or the exhaust duct is allowed subject to the provisions of § 92.114.

(2) *Wind shielding*. Tests shall not be conducted under excessively windy conditions. Winds are excessive if they disturb the size, shape, or location of the exhaust plume in the region where exhaust samples are drawn or where the smoke plume is measured. Tests may be conducted if wind shielding is placed adjacent to the exhaust plume to prevent bending, dispersion, or any other distortion of the exhaust plume as it passes through the optical unit.

(3) *Smokemeter, (light extinction meter)*. A continuously recording, full-flow light obscuration meter shall be used.

(i) It is positioned as specified in paragraph (c) of this section, so that a built-in light beam traverses the exhaust smoke plume which issues from the duct. The light beam shall be at right angles to the axis of the plume, and in those cases were the exhaust is not circular at its discharge, the path of the light beam through the plume shall be along the longest axis of the exhaust stack which is not a diagonal of a rectangular exhaust stack.

(ii) The light source shall be an incandescent lamp with a color temperature range of 2800K to 3250K, or a light source with a spectral peak between 550 and 570 nanometers.

(iii) The light output is collimated to a beam with a nominal diameter of 1.125 inches and an angle of divergence within a 6 degree included angle.

(iv) The light detector shall be a photocell or photodiode. If the light source is an incandescent lamp, the detector shall have a spectral response similar to the photopic curve of the human eye (a maximum response in the range of 550 to 570 nanometers, to less than four percent of that maximum response below 430 nanometers and above 680 nanometers).

(v) A collimating tube with apertures equal to the beam diameter is attached to the detector to restrict the viewing angle of the detector to within a 16 degree included angle.

(vi) An amplified signal corresponding to the amount of light blocked is recorded continuously on a remote recorder.

(vii) An air curtain across the light source and detector window assemblies may be used to minimize deposition of smoke particles on those surfaces provided that it does not measurably affect the opacity of the plume.

(viii) The smokemeter consists of two units; an optical unit and a remote control unit.

(ix) Light extinction meters employing substantially identical measurement principles and producing substantially equivalent results, but which employ other electronic and optical techniques may be used only after having been approved in advance by the Administrator.

(4) *Recorder*. A continuous recorder, with variable chart speed over a minimal range of 1 to 20 cm per minute (or equivalent) and an automatic marker indicating 1-second intervals, continuously records the exhaust gas opacity and throttle position.

(i) The recorder is equipped to indicate each of the throttle notch (test mode) positions.

(ii) The recorder scale for opacity is linear and calibrated to read from 0 to 100 percent opacity full scale.

(iii) The opacity trace has a resolution within one percent opacity.

(iv) The throttle position trace clearly indicates each throttle position.

(5) The recorder used with the smokemeter shall be capable of full-scale deflection in 0.5 second or less. The smokemeter-recorder combination may be damped so that signals with a frequency higher than 10 cycles per second are attenuated. A separate low-pass electronic filter with the following performance characteristics may be installed between the smokemeter and the recorder to achieve the high-frequency attenuation:

(i) Three decibel point: 10 cycles per second.

(ii) Insertion loss: 0 ±0.5 decibel.

(iii) Selectivity: 12 decibels down at 40 cycles per second minimum.

(iv) Attenuation: 27 decibels down at 40 cycles per second minimum.

(6) Automatic data collection equipment may be used, provided it is capable of collecting data equivalent to or

better than the data required by paragraphs (b)(4) and (5) of this section.

(c)(1) *Assembling equipment for locomotive testing*. The optical unit of the smokemeter shall be mounted radially to the exhaust duct so that the measurement will be made at right angles to the axis of the exhaust plume. The distance from the optical centerline to the exhaust outlet shall be minimized; in all cases it shall be less than 10 feet. The maximum allowable distance of unducted space upstream of the optical centerline is 18 inches. The full flow of the exhaust stream shall be centered between the source and detector apertures (or windows and lenses) and on the axis of the light beam.

(2) *Assembling equipment for engine testing*. The optical unit of the smokemeter shall be mounted radially to the exhaust duct so that the measurement will be made at right angles to the axis of the exhaust plume. The distance from the optical centerline to the exhaust outlet shall be less than 25 feet. The maximum allowable distance of unducted space upstream of the optical centerline is 18 inches. In-line smokemeters are allowed. The full flow of the exhaust stream shall be centered between the source and detector apertures (or windows and lenses) and on the axis of the light beam.

(d) *Power supply*. Power shall be supplied to the control unit of the smokemeter in time to allow at least 15 minutes for stabilization prior to testing.

§ 92.112 Analytical gases.

(a) Gases for the CO and CO_2 analyzers shall be single blends of CO and CO_2, respectively, using zero grade nitrogen as the diluent.

(b) Gases for the hydrocarbon analyzer shall be single blends of propane using zero grade air as the diluent.

(c) Gases for the methane analyzer shall be single blends of methane using air as the diluent.

(d) Gases for the NO_X analyzer shall be single blends of NO named as NO_X with a maximum NO_2 concentration of 5 percent of the nominal value using zero grade nitrogen as the diluent.

(e) Fuel for the HFID (or FID, as applicable) and the methane analyzer shall be a blend of 40±2 percent hydrogen with the balance being helium. The mixture shall contain less than 1 ppm equivalent carbon response; 98 to 100 percent hydrogen fuel may be used with advance approval of the Administrator.

(f) *Hydrocarbon analyzer burner air*. The concentration of oxygen must be within 1 mole percent of the oxygen concentration of the burner air used in the latest oxygen interference check ($\%O_2I$). If the difference in oxygen concentration is greater than 1 mole percent, then the oxygen interference must be checked and the analyzer adjusted if necessary, to meet the $\%O_2I$ requirements. The burner air must contain less than 2 ppmC hydrocarbon.

(g) The allowable zero gas (air or nitrogen) impurity concentrations shall not exceed 1 ppm equivalent carbon response, 1 ppm carbon monoxide, 0.04 percent (400 ppm) carbon dioxide and 0.1 ppm nitric oxide.

(h)(1) ''Zero-grade air'' includes artificial ''air'' consisting of a blend of nitrogen and oxygen with oxygen concentrations between 18 and 21 mole percent.

(2) Calibration gases shall be accurate to within ±1 percent of NIST gas standards, or other gas standards which have been approved by the Administrator.

(3) Span gases shall be accurate to within ±2 percent of NIST gas standards, or other gas standards which have been approved by the Administrator.

(i) Oxygen interference check gases shall contain propane at a concentration greater than 50 percent of range. The concentration value shall be determined to calibration gas tolerances by chromatographic analysis of total hydrocarbons plus impurities or by dynamic blending. Nitrogen shall be the predominant diluent with the balance being oxygen. Oxygen concentration in the diluent shall be between 20 and 22 percent.

(j) The use of precision blending devices (gas dividers) to obtain the required calibration gas concentrations is acceptable, provided that the blended gases are accurate to within ±1.5 percent of NIST gas standards, or other gas standards which have been approved by the Administrator. This accuracy implies that primary gases used

for blending must be ''named'' to an accuracy of at least ±1 percent, traceable to NIST or other approved gas standards.

§ 92.113 Fuel specifications.

(a) *Diesel test fuel.* (1) The diesel fuels for testing locomotives or locomotive engines designed to operate on diesel fuel shall be clean and bright, with pour and cloud points adequate for operability. The diesel fuel may contain nonmetallic additives as follows: cetane improver, metal deactivator, antioxidant, dehazer, antirust, pour depressant, dye, dispersant, and biocide. The diesel fuel shall also meet the specifications (as determined using methods incorporated by reference at § 92.5) in Table B113–1 of this section, or substantially equivalent specifications approved by the Administrator, as follows:

TABLE B113–1

Item	ASTM	Type 2–D
Cetane Number	D613	40–48
Cetane Index	D976	40–48
Distillation range:		
IBP,		
°F	D86	340–400
(°C)		(171.1–204.4)
10 pct. point,		
°F	D86	400–460
(°C)		(204.4–237.8)
50 pct. point,		
°F	D86	470–540
(°C)		(243.3–282.2)
90 pct. point,		
°F	D86	560–630
(°C)		(293.3–332.2)
EP,		
°F	D86	610–690
(°C)		(321.1–365.6)
Gravity, °API	D287	32–37
Total sulfur, pct	D2622	0.2–0.4
Hydrocarbon composition, pct:		
Aromatics,	D5186	[1] 27
Paraffins, Naphthenes, Olefins	D1319	([2])
Flashpoint, min.,		
°F	D93	130
°C		(54.4)
Viscosity, centistokes	D445	2.0–3.2

[1] Minimum. [2] Remainder.

(2) Other diesel fuels may be used for testing provided:

(i) They are commercially available; and

(ii) Information, acceptable to the Administrator, is provided to show that only the designated fuel would be used in service; and

(iii) Use of a fuel listed under paragraph (a)(1) of this section would have a detrimental effect on emissions or durability; and

(iv) Written approval from the Administrator of the fuel specifications is provided prior to the start of testing.

(3) The specification of the fuel to be used under paragraphs (a)(1), and (a)(2) of this section shall be reported in accordance with § 92.133.

(b) *Natural gas test fuel (compressed natural gas, liquefied natural gas).* (1) Natural gas-fuel meeting the specifications (as determined using methods incorporated by reference at § 92.5) in Table B113–2 of this section, or substantially similar specifications approved by the Administrator, shall be used in exhaust emissions testing of locomotives or locomotive engines designed to operate on natural gas-fuel, as follows:

TABLE B113–2

Item	Mole pct.	ASTM test method No.	Value
Methane	Min.	D1945	89.0
Ethane	Max.	D1945	4.5

TABLE B113–2—Continued

Item	Mole pct.	ASTM test method No.	Value
C_3 and higher	Max.	D1945	2.3
C_6 and higher	Max.	D1945	0.2
Oxygen	Max.	D1945	0.6
Inert gases: Sum of CO_2 and N_2—Odorant [1].	Max.	D1945	4.0

[1] The natural gas at ambient conditions must have a distinctive odor potent enough for its presence to be detected down to a concentration in air of not over 1/5 (one-fifth) of the lower limit of flammability.

(2) Other natural gas-fuels may be used for testing provided:

(i) They are commercially available; and

(ii) Information, acceptable to the Administrator, is provided to show that only the designated fuel would be used in customer service; and

(iii) Written approval from the Administrator of the fuel specifications is provided prior to the start of testing.

(3) The specification of the fuel to be used under paragraph (b)(1) or (b)(2) of this section shall be reported in accordance with § 92.133.

(c) *Other fuel types.* (1) For locomotives or locomotive engines which are designed to be capable of using a type of fuel (or mixed fuel) other than diesel fuel, or natural gas fuel (e.g., methanol), and which are expected to use that type of fuel (or mixed fuel) in service, a commercially available fuel of that type shall be used for exhaust emission testing. The Administrator shall determine the specifications of the fuel to be used for testing, based on the engine design, the specifications of commercially available fuels, and the recommendation of the manufacturer.

(2) The specification of the fuel to be used under paragraph (c)(1) of this section shall be reported in accordance with § 92.133.

§ 92.114 Exhaust gas and particulate sampling and analytical system.

(a) *General.* (1) During emission testing, the engine exhaust is routed through an exhaust duct connected to, or otherwise adjacent to the outlet of the locomotive exhaust system. Emission samples are collected as specified in paragraphs (b) and (c) of this section. Exhaust duct requirements are specified in paragraph (d) of this section.

(2) The systems described in this section are appropriate for use with locomotives or engines employing a single exhaust.

(i) For testing where the locomotive or engine has multiple exhausts all exhaust streams shall be combined into a single stream prior to sampling, except as allowed by paragraph (a)(2)(ii) of this section.

(ii) For locomotive testing where the locomotive has multiple exhaust stacks, proportional samples may be collected from each exhaust outlet instead of ducting the exhaust stacks together, provided that the CO_2 concentrations in each exhaust stream are shown (either prior to testing or during testing) to be within 5 percent of each other for each test mode.

(3) All vents, including analyzer vents, bypass flow, and pressure relief vents of regulators, should be vented in such a manner to avoid endangering personnel in the immediate area.

(4) Additional components, not specified here, such as instruments, valves, solenoids, pumps, switches, and so forth, may be employed to provide additional information and coordinate the functions of the component systems, provided that their use is consistent with good engineering practice. Any variation from the specifications in this subpart including performance specifications and emission detection methods may be used only with prior approval by the Administrator.

(b) *Raw exhaust sampling for gaseous emissions.* (1)(i) An example of the type of sampling and analytical system which is to be used for gaseous emissions testing under this subpart is shown in Figure B114–1 of this section. All components or parts of components that are wetted by the sample or corrosive calibration gases shall be either chemically cleaned stainless steel or other inert material, for example, polytetrafluoroethylene resin. The use of ''gauge savers'' or ''protectors'' with nonreactive diaphragms to reduce dead volumes is permitted. Additional components such as instruments, valves, solenoids, pumps, switches, etc. may be employed to provide additional information and coordinate the functions of the component systems.

(ii) *System components list.* The following is a list of components shown in Figure B114–1 of this section by numeric identifier.

(A) *Filters.* Glass fiber filter paper is permitted for the fine particulate filters (F1, F2, and F3). Optional filter F4 is a coarse filter for large particulates. Filters F3 and F4 are heated filters

(B) *Flowmeters.* Flowmeters FL1 and FL2 indicate sample flow rates through the CO and CO_2 analyzers. Flowmeters FL3, FL4, FL5, and FL6 indicate bypass flow rates.

(C) *Gauges.* Downstream gauges are required for any system used for testing under this subpart. Upstream gauges may be required under this subpart. Upstream gauges G1 and G2 measure the input to the CO and CO_2 analyzers. Downstream gauges G3 and G4 measure the exit pressure of the CO and CO_2 analyzers. If the normal operating range of the downstream gauges is less than 3 inches of water, then the downstream gauges must be capable of reading both pressure and vacuum. Gauges G3 and G4 are not necessary if the analyzers are vented directly to atmospheric pressure.

(D) *Pressure gauges.* P1 is a bypass pressure gauge; P2, P3, P4, and P5 are for sample or span pressure at inlet to flow control valves.

(E) *Water traps.* Water traps WT1 and WT2 to remove water from the sample. A water trap performing the function of WT1 is required for any system used for testing under this subpart. Chemical dryers are not an acceptable method of removing the water. Water removal by condensation is acceptable. If water is removed by condensation, the sample gas temperature or sample dew point must be monitored either within the water trap or downstream; it may not exceed 45 °F (7 °C). Means other than condensation may be used only with prior approval from the Administrator.

(F) *Regulators.* R1, R3, R4, and R6 are line pressure regulators to control span pressure at inlet to flow control valves; R2 and R5 are back pressure regulators to control sample pressure at inlet to flow control valves.

(G) *Valves.* V1, V7, V8, and V14 are selector valves to select zero or calibration gases; V2 are optional heated selector valves to purge the sample probe, perform leak checks, or to perform hang-up checks; V3 and V5 are selector valves to select sample or span gases; V4, V6, and V15 are flow control valves; V9 and V13—heated selector valve to select sample or span gases; V10 and V12—heated flow control valves; V11—Selector valve to select NO_X or bypass mode in the chemiluminescence analyzer; V16—heated selector valve to perform leak checks.

(H) *Pump.* Sample transfer pump to transport sample to analyzers.

(I) *Temperature sensor.* A temperature sensor (T1) to measure the NO_2 to NO converter temperature is required for any system used for testing under this subpart.

(J) *Dryer.* Dryers D1 and D2 to remove the water from the bypass flows to prevent condensation in flowmeters FL3, FL4, and FL6.

(2) The following requirements must be incorporated in each gaseous sampling system used for testing under this subpart:

(i) The exhaust is analyzed for gaseous emissions using analyzers meeting the specifications of § 92.109, and all analyzers must obtain the sample to be analyzed from the same sample probe, and internally split to the different analyzers.

(ii) Sample transfer lines must be heated as specified in paragraph (b)(4) of this section.

(iii) Carbon monoxide and carbon dioxide measurements must be made on a dry basis. Specific requirements for the means of drying the sample can be found in paragraph (b)(1)(ii)(E) of this section.

(iv) All NDIR analyzers must have a pressure gauge immediately downstream of the analyzer. The gauge tap must be within 2 inches of the analyzer exit port. Gauge specifications can be found in paragraph (b)(1)(ii)(C) of this section.

(v) All bypass and analyzer flows exiting the analysis system must be measured. Capillary flows such as in HFID and CL analyzers are excluded. For each NDIR analyzer with a flow meter located upstream of the analyzer, an upstream pressure gauge must be used. The gauge tap must be

within 2 inches of the analyzer entrance port.

(vi) Calibration or span gases for the NO_X measurement system must pass through the NO_2 to NO converter.

(vii) The temperature of the NO_2 to NO converter must be displayed continuously.

(3) *Gaseous sample probe.* (i) The gaseous emissions sample probe shall be a straight, closed end, stainless steel, multi-hole probe. The inside diameter shall not be greater than the inside diameter of the sample line by more than 0.01 inches (0.03 cm). The wall thickness of the probe shall not be greater than 0.04 inches (0.10 cm). The fitting that attaches the probe to the exhaust duct shall be as small as practical in order to minimize heat loss from the probe.

(ii) The gaseous emissions sample probe shall have a minimum of three holes in each 3 inch segment of length of the probe. The spacing of the radial planes for each hole in the probe must be such that they cover approximately equal cross-sectional areas of the exhaust duct. The angular spacing of the holes must be approximately equal. The angular spacing of any two holes in one plane may not be 180 °±20° (see section view C–C of Figure B114–2 of this section). The holes should be sized such that each has approximately the same flow. If only three holes are used in each 3 inch segment of probe length, they may not all be in the same radial plane.

(iii) The sample probe shall be so located in the center of the exhaust duct to minimize stratification, with respect to both concentration and velocity, present in the exhaust stream. The probe shall be located between two feet and five feet downstream of the locomotive exhaust outlet (or nearest practical equivalent during engine testing), and at least 1 foot upstream of the outlet of the exhaust duct to the atmosphere.

(iv) If the exhaust duct is circular in cross section, the sample probe should extend approximately radially across the exhaust duct, and approximately through the center of the duct. The sample probe must extend across at least 80 percent of the diameter of the duct.

(v) If the exhaust duct is not circular in cross section, the sample probe should extend across the exhaust duct approximately parallel to the longest sides of the duct, or along the longest axis of the duct which is not a diagonal, and through the approximate center of the duct. The sample probe must extend across at least 80 percent of the longest axis of the duct which is not a diagonal, and be approximately parallel to the longest sides of the duct.

(vi) Other sample probe designs and/or locations may be used only if demonstrated (to the Administrator's satisfaction) to provides a more representative sample.

(4) *Sample transfer line(s).* (i) The maximum inside diameter of the gaseous emissions sample line shall not exceed 0.52 inches (1.32 cm).

(ii) If valve V2 is used, the sample probe must connect directly to valve V2. The location of optional valve V2 may not be greater than 4 feet (1.22 m) from the exhaust duct.

(iii) The sample transport system from the engine exhaust duct to the HC analyzer and the NO^X analyzer must be heated as is indicated in Figure B114–1 of this section.

(A) For diesel fueled and biodiesel fueled locomotives and engines, the wall temperature of the HC sample line must be maintained at 375 ± 20 °F (191 ± 11 °C). An exception is made for the first 4 feet (122 cm) of sample line from the exhaust duct. The upper temperature tolerance for this 4 foot section is waived and only the minimum temperature specification applies.

(B) For locomotives and engines using fuels other than diesel or biodiesel, the heated components in the HC sample path shall be maintained at a temperature approved by the Administrator, not exceeding 446 °F (230 °C).

(C) For all fuels, wall temperature of the NO_X sample line must be maintained between 140 °F (60 °C) and 446 °F (230 °C). An exception is made for the first 4 feet (122 cm) of sample line from the exhaust duct. The upper temperature tolerance for this 4 foot section is waived and only the minimum temperature specification applies.

(D) For each component (pump, sample line section, filters, etc.) in the heated portion of the sampling system

that has a separate source of power or heating element, use engineering judgment to locate the coolest portion of that component and monitor the temperature at that location. If several components are within an oven, then only the surface temperature of the component with the largest thermal mass and the oven temperature need be measured.

(c) *Particulate emissions.* (1)(i) Schematic drawing. An example of a sampling system which may be used for particulate emissions testing under this subpart is shown in Figure B114–3 of this section. All components or parts of components that are wetted by the samples gases upstream of the filter shall be either chemically cleaned stainless steel or other inert material, for example, polytetrafluoroethylene resin. The use of ''gauge savers'' or ''protectors'' with nonreactive diaphragms to reduce dead volumes is permitted. Additional components such as instruments, valves, solenoids, pumps, switches, etc. may be employed to provide additional information and coordinate the functions of the component systems.

(ii) The following requirements must be incorporated in each system used for testing under this subpart:

(A) All particulate filters must obtain the sample from the same sample probe located within the exhaust gas extension with internal split to the different filters.

(B) The wall temperature of the sample transport system from the probe to the dilution tunnel (excluding the first 4 feet of the particulate transfer tube) must be maintained at 375 °F to 395 °F (191 °C to 202 °C).

(2) *Particulate raw sample probe.* (i) The sample probe for the raw exhaust shall be a straight, closed end, stainless steel, multi-hole probe of approximately 1.25 inch (3.2 cm) diameter. The inside diameter shall not be greater than the inside diameter of the sample line by more than 0.1 inches (0.3 cm). The wall thickness of the probe shall not be greater than 0.06 inches (0.15 cm). The fitting that attaches the probe to the exhaust duct shall be as small as practical in order to minimize heat loss from the probe.

(ii) All sample collection holes in the probe shall be located so as to face away from the direction of flow of the exhaust stream or at most be tangential to the flow of the exhaust stream past the probe (see Figure B114–4 of this section). Five holes shall be located in each radial plane along the length of the probe in which sample holes are placed. The spacing of the radial planes for each set of holes in the probe must be such that they cover approximately equal cross-sectional areas of the exhaust duct. For rectangular ducts, this means that the sample hole-planes must be equidistant from each other. For circular ducts, this means that the distance between the sample hole-planes must be decreased with increasing distance from the center of the duct (see Figure B114–4 of this section).

(NOTE: Particulate concentrations are expected to vary to some extent as a function of the distance to the duct wall; thus each set of sample holes collects a sample that is representative of a cross-sectional disk at that approximate distance from the wall.)

The spacing between sets of sample holes along the length of the probe shall be no more than 4 inches (10 cm). The holes should be sized such that each has approximately the same flow.

(iii)(A) The particulate sample probe shall be located in the exhaust duct on an axis which is directly downstream of, and parallel to the axis of the gaseous sample probe. The distance between the probes shall be between 3 inches (7.6 cm) and 6 inches (15.2 cm). Greater spacing is allowed for engine testing, where spacing of 3 inches (7.6 cm) to 6 inches (15.2 cm) is not practical.

(B) If the exhaust duct is circular in cross section, the sample probe should extend approximately radially across the exhaust duct, and approximately through the center of the duct. The sample probe must extend across at least 80 percent of the diameter of the duct.

(C) If the exhaust duct is not circular in cross section, the sample probe should extend across the exhaust duct approximately parallel to the longest sides of the duct, or along the longest

axis of the duct which is not a diagonal, and through the approximate center of the duct. The sample probe must extend across at least 80 percent of the longest axis of the duct which is not a diagonal, and be approximately parallel to the longest sides of the duct.

(3) *Particulate sample transfer line.* (i) The maximum inside diameter of the particulate emissions sample line shall be approximately 2.5 inches (6.4 cm).

(ii) The sample transfer line shall be heated to maintain a wall temperature above 375 °F.

(4) *Dilution tunnel.* The flow capacity of the blower moving the mixture of sample and air through the tunnel must be sufficient to maintain the diluted sample stream at a temperature of 125 °F (51.7 °C) or less, at the sampling zone in the dilution tunnel and at the sample filter. A single measurement of diluted exhaust temperature is required. The temperature shall also be maintained as required to prevent condensation at any point in the dilution tunnel. A small negative pressure is to be maintained in the dilution tunnel by throttling at the source of the dilution air, and adjusted as necessary, sufficient to draw sample through the probe and sample transfer line. Direct sampling of the particulate material may take place (Figure B114–3 of this section) at this point.

(i)(A) The dilution tunnel shall be:

(*1*) Small enough in diameter to cause turbulent flow (Reynolds Number greater than 4000) and of sufficient length to cause complete mixing of the exhaust and dilution air;

(*2*) 4 inches (10 cm) minimum inside diameter;

(*3*) Constructed of electrically conductive material which does not react with the exhaust components; and

(*4*) Electrically grounded.

(B) The temperature of the diluted exhaust stream inside of the dilution tunnel shall be sufficient to prevent water condensation.

(C) The engine exhaust shall be directed downstream at the point where it is introduced into the dilution tunnel.

(ii) Dilution air:

(A) Shall be at a temperature of 68 °F (20 °C) or greater.

(B) May be filtered at the dilution air inlet.

(C) May be sampled to determine background particulate levels, which can then be subtracted from the values measured in the exhaust stream.

(D) Shall be sampled to determine the background concentration of CO_2.

(iii) Dilute sample probe and collection system.

(A) The particulate sample probe in the dilution tunnel shall be:

(*1*) Installed facing upstream at a point where the dilution air and exhaust are well mixed (i.e., on the tunnel centerline, approximately 10 tunnel diameters downstream of the point where the exhaust enters the dilution tunnel).

(*2*) Sufficiently distant (radially) from other sampling probes so as to be free from the influence of wakes or eddies produced by the other probes.

(*3*) 0.5 in. (1.3 cm) minimum inside diameter.

(*4*) The distance from the sampling tip to the filter holder shall not be more than 40 inches (102 cm).

(*5*) Designed to minimize the deposition of particulate during transfer (i.e., bends should be as gradual as possible, protrusions (due to sensors, etc.) should be smooth and not sudden, etc.).

(B) The gas meters or flow instrumentation shall be located sufficiently distant from the tunnel so that the inlet gas temperature remains constant (±5 °F (±2.8 °C)). Alternately, the temperature of the sample may be monitored at the gas meter, and the measured volume corrected to standard conditions.

(C) *Particulate sampling filters.* (*1*) Fluorocarbon-coated glass fiber filters or fluorocarbon-based (membrane) filters are required.

(*2*) Particulate filters must have a diameter to maintain the average face velocity of the sample across the filter between 35 and 80 cm/s.

(*3*) The dilute exhaust will be simultaneously sampled by a pair of filters (one primary and one back-up filter) during each phase of the test. The back-up filter shall be located no more than 4 inches (10 cm) downstream of the primary filter. The primary and back-up filters shall not be in contact with each other.

(*4*) The recommended target loading on a primary 70-mm filter (60 mm diameter stain area) is 1.3 milligrams. Equivalent loadings (0.5 mg/1075 mm^2 stain area) shall be used as target loadings when other filter sizes are used.

(D) *Diluted CO_2 sample collection system.* (*1*) The concentrations of CO_2 in the dilution air and diluted exhaust are determined by pumping a sample into a sample bag (made of a nonreactive material) or directly to the analyzer, as shown in Figure B114–3 of this section.

(*2*) The sample probe for the diluted exhaust shall be installed facing upstream at a point where the dilution air and exhaust are well mixed (i.e., on the tunnel centerline, approximately 10 tunnel diameters downstream of the point where the exhaust enters the dilution tunnel). It shall also be sufficiently distant (radially) from other sampling probes so as to be free from the influence of any wakes or eddies produced by the other probes.

(iv) Other sample flow handling and/or measurement systems may be used if shown to yield equivalent results and if approved in advance by the Administrator. (See Appendix IV of this part for guidance.)

(d) *Exhaust system.* The exhaust system shall meet the following requirements:

(1) For locomotive testing, the engine exhaust shall be routed through an exhaust duct with dimensions equal to or slightly larger than the dimensions of the locomotive exhaust outlet. The exhaust duct shall be designed so as to not significantly affect exhaust backpressure.

(2) For engine testing, either a locomotive-type or a facility-type exhaust system (or a combination system) may be used. The exhaust backpressure for engine testing shall be set between 90 and 100 percent of the maximum backpressure that will result with the exhaust systems of the locomotives in which the engine will be used. The facility-type exhaust system shall meet the following requirements:

(i) It must be composed of smooth ducting made of typical in-use steel or stainless steel.

(ii) If an aftertreatment system is employed, the distance from the exhaust manifold flange(s), or turbocharger outlet to any exhaust aftertreatment device shall be the same as in the locomotive configuration unless the manufacturer is able to demonstrate equivalent performance at another location.

(iii) If the exhaust system ducting from the exit of the engine exhaust manifold or turbocharger outlet to smoke meter exceeds 12 feet (3.7 m) in length, then all ducting shall be insulated consistent with good engineering practice.

(iv) For engines designed for more than one exhaust outlet to the atmosphere, a specially fabricated collection duct may be used. The collection duct should be located downstream of the in-locomotive exits to the atmosphere. Any potential increase in backpressure due to the use of a single exhaust instead of multiple exhausts may be compensated for by using larger than standard exhaust system components in the construction of the collection duct.

(e) *Dilute exhaust sampling for gaseous and particulate emissions.* (1) Dilution of the exhaust prior to sampling is allowed for gaseous emissions. The equipment and methods used for dilution, sampling and analysis shall comply with the requirements of subpart N of part 86 of this chapter, with the following exceptions and additional requirements:

(i) Proportional sampling and heat exchangers are not required;

(ii) Larger minimum dimensions for the dilution tunnel(s) shall be specified by the Administrator;

(iii) Other modifications may be made with written approval from the Administrator.

(2) Dilution of only a portion of the exhaust is allowed, provided that:

(i) The fraction of the total exhaust that is diluted is determined for systems that determine mass emission rates (g/hr) from the total volume of the diluted sample; or

(ii) The ratio of raw sample volume to diluted sample volume is determined for systems that determine mass emission rates (g/hr) from measured fuel flow rates.

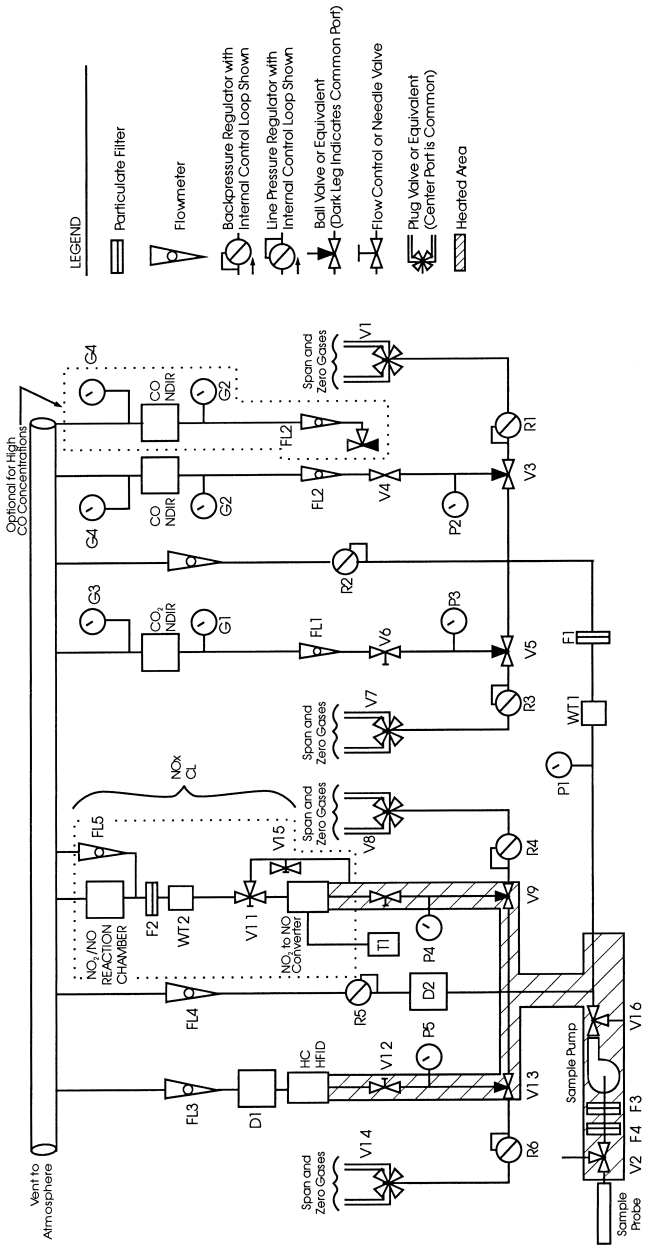

Figure B114-1. -- Exhaust Gas Sampling and Analytical Train

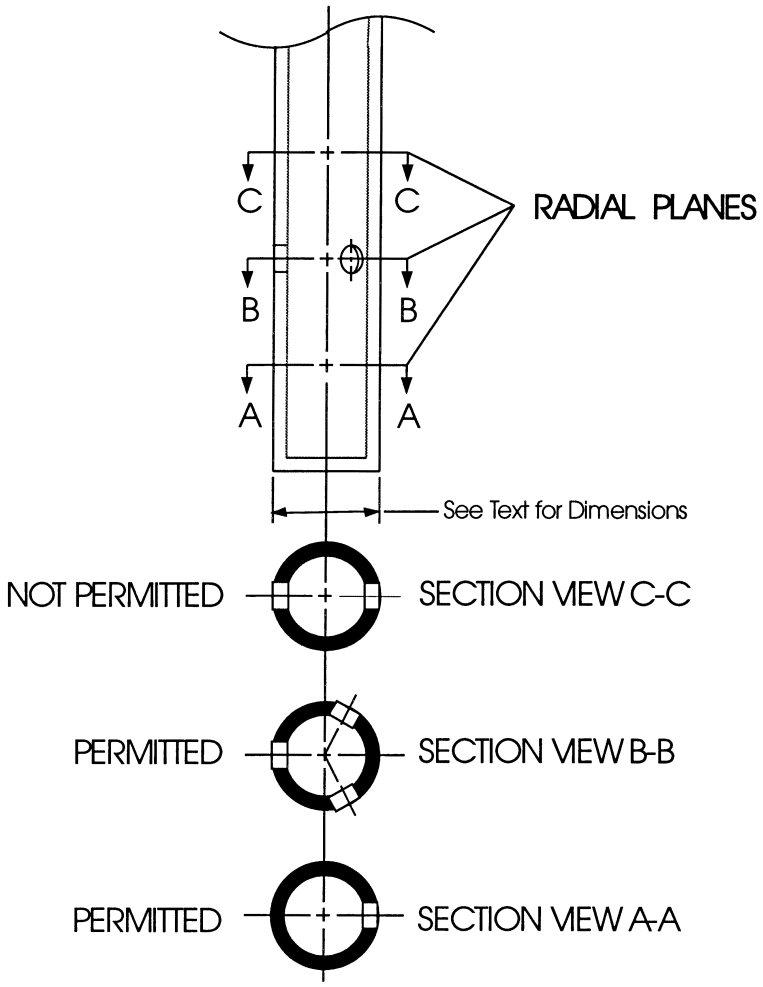

Figure B114-2 SAMPLE PROBE AND TYPICAL HOLE SPACING

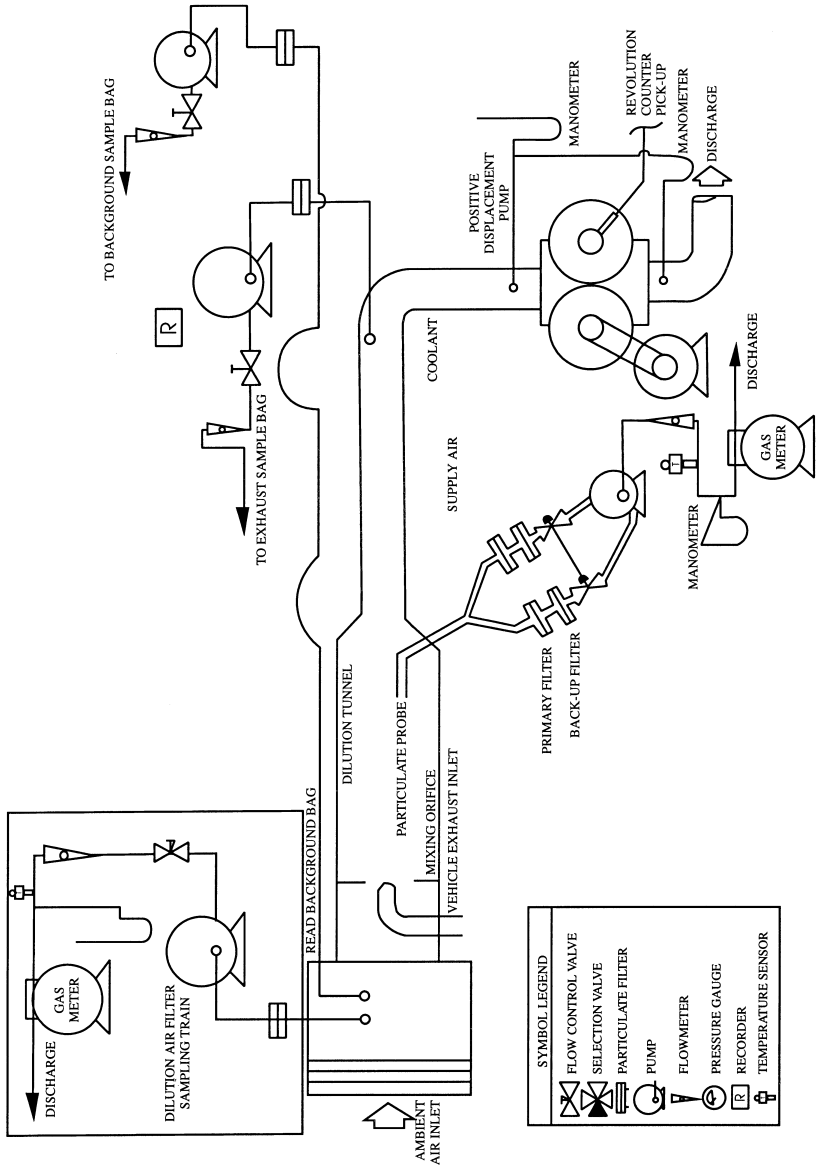

Figure B114-3 PARTICULATE EMISSIONS SAMPLING SYSTEM

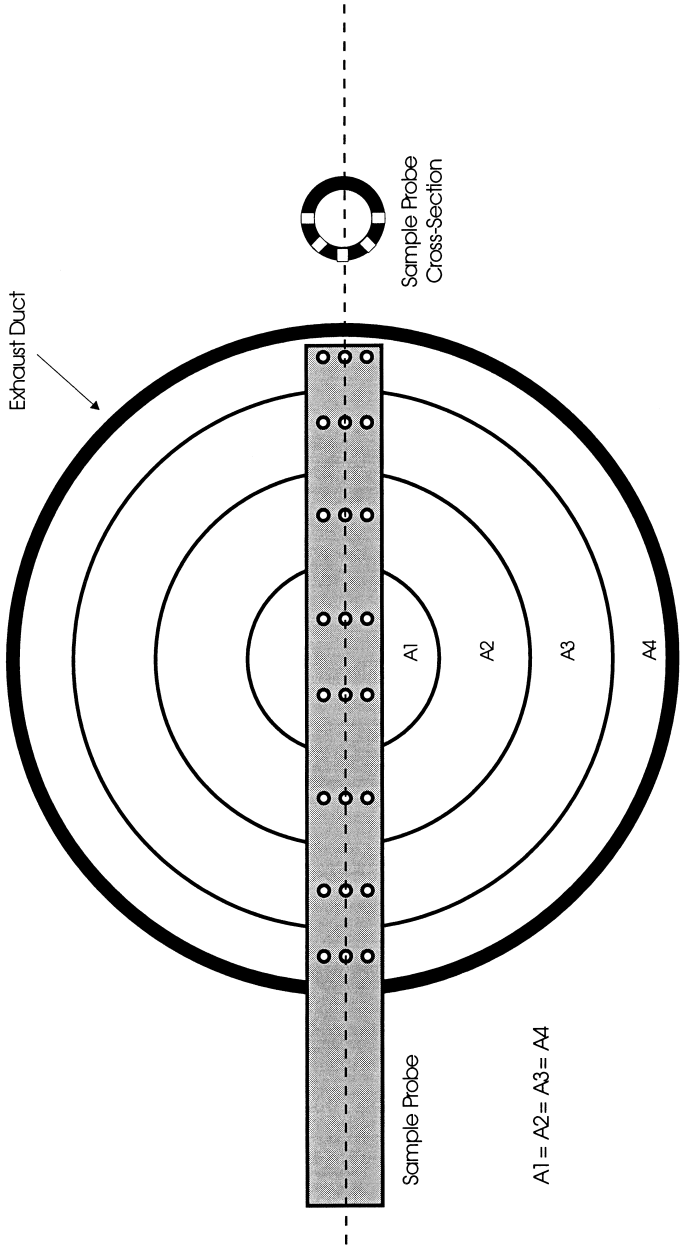

Figure B114-4 Particulate Sample Probe Design

§ 92.115 Calibrations; frequency and overview.

(a) Calibrations shall be performed as specified in §§ 92.116 through 92.122.

(b) At least monthly or after any maintenance which could alter calibration, perform the periodic calibrations required by § 92.118(a)(2) (certain analyzers may require more frequent calibration depending on the equipment and use). Exception: the water rejection ratio and the CO_2 rejection ratio on all NDIR analyzers is only required to be performed quarterly.

(c) At least monthly or after any maintenance which could alter calibration, calibrate the engine dynamometer flywheel torque and speed measurement transducers, as specified in § 92.116.

(d) At least monthly or after any maintenance which could alter calibration, check the oxides of nitrogen converter efficiency, as specified in § 92.121.

(e) At least weekly or after any maintenance which could alter calibration, check the dynamometer (if used) shaft torque feedback signal at steady-state conditions by comparing:

(1) Shaft torque feedback to dynamometer beam load; or

(2) By comparing in-line torque to armature current; or

(3) By checking the in-line torque meter with a dead weight per § 92.116(b)(1).

(f) At least quarterly or after any maintenance which could alter calibration, calibrate the fuel flow measurement system as specified in § 92.107.

(g) At least annually or after any maintenance which could alter calibration, calibrate the electrical output measurement system for the electrical load bank used for locomotive testing.

(h) Sample conditioning columns, if used in the CO analyzer train, should be checked at a frequency consistent with observed column life or when the indicator of the column packing begins to show deterioration.

(i) For equipment not addressed in §§ 92.116 through 92.122 calibrations shall be performed at least as often as required by the equipment manufacturer or as necessary according to good practices. The calibrations shall be performed in accordance with procedures specified by the equipment manufacturer.

(j) Where testing is conducted intermittently, calibrations are not required during period in which no testing is conducted, provided that times between the most recent calibrations and the date of any test does not exceed the calibration period. For example, if it has been more than one month since the analyzers have been calibrated (as specified in paragraph (c) of this section) then they must be calibrated prior to the start of testing.

§ 92.116 Engine output measurement system calibrations.

(a) *General requirements for dynamometer calibration.* (1) The engine flywheel torque and engine speed measurement transducers shall be calibrated with the calibration equipment described in this section.

(2) The engine flywheel torque feedback signals to the cycle verification equipment shall be electronically checked before each test, and adjusted as necessary.

(3) Other engine dynamometer system calibrations shall be performed as dictated by good engineering practice.

(4) When calibrating the engine flywheel torque transducer, any lever arm used to convert a weight or a force through a distance into a torque shall be used in a horizontal position (±5 degrees).

(5) Calibrated resistors may not be used for engine flywheel torque transducer calibration, but may be used to span the transducer prior to engine testing.

(b) *Dynamometer calibration equipment*—(1) *Torque calibration equipment.* Two techniques are allowed for torque calibration. Alternate techniques may be used if shown to yield equivalent accuracies. The NIST ''true'' value torque is defined as the torque calculated by taking the product of an NIST traceable weight or force and a sufficiently accurate horizontal lever arm distance, corrected for the hanging torque of the lever arm.

(i) The lever-arm dead-weight technique involves the placement of known weights at a known horizontal distance from the center of rotation of the

torque measuring device. The equipment required is:

(A) *Calibration weights.* A minimum of six calibration weights for each range of torque measuring device used are required. The weights must be approximately equally spaced and each must be traceable to NIST weights within 0.1 percent. Laboratories located in foreign countries may certify calibration weights to local government bureau standards. Certification of weight by state government Bureau of Weights and Measures is acceptable. Effects of changes in gravitational constant at the test site may be accounted for if desired.

(B) *Lever arm.* A lever arm with a minimum length of 24 inches is required. The horizontal distance from the centerline of the engine torque measurement device to the point of weight application shall be accurate to within ±0.10 inches. The arm must be balanced, or the hanging torque of the arm must be known to within ±0.1 ft-lbs.

(ii) The transfer technique involves the calibration of a master load cell (i.e., dynamometer case load cell). This calibration can be done with known calibration weights at known horizontal distances, or by using a hydraulically actuated precalibrated master load cell. This calibration is then transferred to the flywheel torque measuring device. The technique involves the following steps:

(A) A master load cell shall be either precalibrated or be calibrated per paragraph (b)(1)(i)(A) of this section with known weights traceable to NIST within 0.1 percent, and used with the lever arm(s) specified in this section. The dynamometer should be either running or vibrated during this calibration to minimize static hysteresis.

(B) Transfer of calibration from the case or master load cell to the flywheel torque measuring device shall be performed with the dynamometer operating at a constant speed. The flywheel torque measurement device readout shall be calibrated to the master load cell torque readout at a minimum of six loads approximately equally spaced across the full useful ranges of both measurement devices. (Note that good engineering practice requires that both devices have approximately equal useful ranges of torque measurement.) The transfer calibration shall be performed in a manner such that the accuracy requirements of § 92.106(b)(1)(ii) for the flywheel torque measurement device readout be met or exceeded.

(iii) Other techniques may be used if shown to yield equivalent accuracy.

(2) *Speed calibration equipment.* A 60 (or greater) tooth wheel in combination with a common mode rejection frequency counter is considered an absolute standard for engine or dynamometer speed.

(c) *Dynamometer calibration.* (1) If necessary, follow the manufacturer's instructions for initial start-up and basic operating adjustments.

(2) Check the dynamometer torque measurement for each range used by the following:

(i) Warm up the dynamometer following the equipment manufacturer's specifications.

(ii) Determine the dynamometer calibration moment arm. Equipment manufacturer's data, actual measurement, or the value recorded from the previous calibration used for this subpart may be used.

(iii) Calculate the indicated torque (IT) for each calibration weight to be used by:

IT=calibration weight (lb)×calibration moment arm (ft)

(iv) Attach each calibration weight specified in paragraph (b)(1)(i)(A) of this section to the moment arm at the calibration distance determined in paragraph (b)(2)(ii)(B) of this section. Record the power measurement equipment response (ft-lb) to each weight.

(v) For each calibration weight, compare the torque value measured in paragraph (b)(2)(iv) of this section to the calculated torque determined in paragraph (b)(2)(iii) of this section.

(vi) The measured torque must be within 2 percent of the calculated torque.

(vii) If the measured torque is not within 2 percent of the calculated torque, adjust or repair the system. Repeat the steps in paragraphs (b)(2)(i) through (b)(2)(vi) of this section with the adjusted or repaired system.

(3) *Option*. A master load-cell or transfer standard may be used to verify the in-use torque measurement system.

(i) The master load-cell and read out system must be calibrated with weights at each test weight specified in paragraph (b)(1)(i)(A) of this section. The calibration weights must be traceable to within 0.1 percent of NIST weights.

(ii) Warm up the dynamometer following the equipment manufacturer's specifications.

(iii) Attach the master load-cell and loading system.

(iv) Load the dynamometer to a minimum of 6 equally spaced torque values as indicated by the master load-cell for each in-use range used.

(v) The in-use torque measurement must be within 2 percent of the torque measured by the master system for each load used.

(vi) If the in-use torque is not within 2 percent of the master torque, adjust or repair the system. Repeat steps in paragraphs (b)(3)(ii) through (b)(3)(vi) of this section with the adjusted or repaired system.

(4) The dynamometer calibration must be completed within 2 hours from the completion of the dynamometer warm-up.

(d) *Electrical load banks*. Equipment used to measure the electrical power output dissipated by electrical load banks shall be calibrated as frequently as required by § 92.115, using a calibration procedure that is consistent with good engineering practice and approved by the Administrator.

§ 92.117 Gas meter or flow instrumentation calibration, particulate measurement.

(a) Sampling for particulate emissions requires the use of gas meters or flow instrumentation to determine flow through the particulate filters. These instruments shall receive initial and monthly calibrations as follows:

(1)(i) Install a calibration device in series with the instrument. A critical flow orifice, a bellmouth nozzle, or a laminar flow element or an NIST traceable flow calibration device is required as the standard device.

(ii) The flow system should be checked for leaks between the calibration and sampling meters, including any pumps that may be part of the system, using good engineering practice.

(2) Flow air through the calibration system at the sample flow rate used for particulate testing and at the backpressure which occurs during the sample test.

(3) When the temperature and pressure in the system have stabilized, measure the indicated gas volume over a time period of at least five minutes or until a gas volume of at least ±1 percent accuracy can be determined by the standard device. Record the stabilized air temperature and pressure upstream of the instrument and as required for the standard device.

(4) Calculate air flow at standard conditions as measured by both the standard device and the instrument(s).

(5) Repeat the procedures of paragraphs (a)(2) through (4) of this section using at least two flow rates which bracket the typical operating range.

(6) If the air flow at standard conditions measured by the instrument differs by ±1.0 percent of the maximum operating range or ±2.0 percent of the point (whichever is smaller), then a correction shall be made by either of the following two methods:

(i) Mechanically adjust the instrument so that it agrees with the calibration measurement at the specified flow rates using the criteria of paragraph (a)(6) of this section; or

(ii) Develop a continuous best fit calibration curve for the instrument (as a function of the calibration device flow measurement) from the calibration points to determine corrected flow. The points on the calibration curve relative to the calibration device measurements must be within ±1.0 percent of the maximum operating range of ±2.0 percent of the point through the filter.

(b) *Other systems*. A bell prover may be used to calibrate the instrument if the procedure outlined in ANSI B109.1–1992 (incorporated by reference at § 92.5) is used. Prior approval by the Administrator is not required to use the bell prover.

§ 92.118 Analyzer checks and calibrations.

(a)(1) Prior to initial use and after major repairs, bench check each analyzer for compliance with the specifications of § 92.109.

(2) The periodic calibrations are required:

(i) Leak check of the pressure side of the system (see paragraph (b) of this section). If the option described in paragraph (b)(2) of this section is used, a pressure leak check is not required.

(ii) Calibration of all analyzers (see §§ 92.119 through 92.122).

(iii) Check of the analysis system response time (see paragraph (c) of this section). If the option described in paragraph (c)(2) of this section is used, a response time check is not required.

(b) *Leak checks*—(1) *Vacuum side leak check*. (i) Any location within the analysis system where a vacuum leak could affect the test results must be checked.

(ii) The maximum allowable leakage rate on the vacuum side is 0.5 percent of the in-use flow rate for the portion of the system being checked. the analyzer flows and bypass flows may be used to estimate the in-use flow rates.

(iii) The sample probe and the connection between the sample probe and valve V2 may be excluded from the leak check.

(2) *Pressure side leak check*. (i) The maximum allowable leakage rate on the pressure side in 5 percent of the in-use flow rate.

(ii) Option: If the flow rate for each flow meter is equal to or greater than the flow rate recorded in paragraph (c)(2)(i) of this section, then a pressure side leak check is not required.

(c) *System response time; check procedure*. (1) After any major change in the system, check the system response time by the following procedure:

(i) Stabilize the operating temperature of the sample line, sample pump, and heated filters.

(ii) Introduce an HC span gas into the sampling system at the sample probe or valve V2 at atmospheric pressure. Simultaneously, start the time measurement.

(iii) When the HC instrument response is 95 percent of the span gas concentration used, stop the time measurement.

(iv) If the elapsed time is more than 20.0 seconds, make necessary adjustments.

(v) Repeat with the CO, CO_2, and NO_X instruments and span gases.

(2) *Option*. If the following parameters are determined, the initial system response time may be generally applied to future checks:

(i) *Analyzer and bypass flow rates*. (A) Determine by experimentation the minimum analyzer and bypass flow rates individually and in combination that will produce a response time as close as possible to 20.0 seconds per paragraph (c)(1) of this section.

(B) Record the highest minimum flow rate for each flow meter as determined in paragraph (c)(2)(i)(A) of this section.

(ii) *Capillary flow analyzers*. This procedure is applicable only to analyzers that have sample capillaries such as the HFID and CL analyzers. It is also assumed that the system has sample/span valves that perform the function of valves V9 and V13 in.

(A) Operate the analyzer(s) at the in-use capillary pressure.

(B) Adjust the bypass flow rate to the flow rate recorded in paragraph (c)(2)(i)(B) of this section.

(C) Measure and record the response time from the sample/span valve(s) per paragraph (c)(1) of this section.

(D) The response time required by paragraph (c)(2)(ii)(C) of this section can be determined by switching from the ''sample'' position to the ''span'' position of the sample/span valve and observing the analyzer response on a chart recorder. Normally, the ''sample'' position would select a ''room air'' sample and the ''span'' position would select a span gas.

(E) Adjust the bypass flow rate to the normal in-use value.

(F) Measure and record the response time from the sample/span valve(s) per paragraph (c)(1) of this section.

(G) Determine the slowest response time (step in paragraph (c)(2)(ii)(C) of this section or step in paragraph (c)(2)(ii)(D) of this section) and add 2 seconds to it.

§ 92.119 Hydrocarbon analyzer calibration.

The HFID hydrocarbon analyzer shall receive the following initial and periodic calibration:

(a) *Initial and periodic optimization of detector response.* Prior to introduction into service and at least annually thereafter, the HFID hydrocarbon analyzer shall be adjusted for optimum hydrocarbon response. Alternate methods yielding equivalent results may be used, if approved in advance by the Administrator.

(1) Follow good engineering practices for initial instrument start-up and basic operating adjustment using the appropriate fuel (see § 92.112) and zero-grade air.

(2) Optimize on the most common operating range. Introduce into the analyzer a propane-in-air mixture with a propane concentration equal to approximately 90 percent of the most common operating range.

(3) HFID optimization is performed:

(i) According to the procedures outlined in Society of Automotive Engineers (SAE) paper No. 770141, ''Optimization of Flame Ionization Detector for Determination of Hydrocarbons in Diluted Automobile Exhaust'', author, Glenn D. Reschke (incorporated by reference at § 92.5); or

(ii) According to the following procedures:

(A) If necessary, follow manufacturer's instructions for instrument start-up and basic operating adjustments.

(B) Set the oven temperature 5 °C hotter than the required sample-line temperature. Allow at least one-half hour after the oven has reached temperature for the system to equilibrate.

(C) *Initial fuel flow adjustment.* With the fuel and air-flow rates set at the manufacturer's recommendations, introduce a 350 ppmC ±75 ppmC span gas to the detector. Determine the response at a given fuel flow from the difference between the span-gas response and the zero-gas response. Incrementally adjust the fuel flow above and below the manufacturer's specification. Record the span and zero response at these fuel flows. A plot of the difference between the span and zero response versus fuel flow will be similar to the one shown in Figure B119–1 of this section. Adjust the fuel-flow rate to the rich side of the curve, as shown. This is initial flow-rate setting and may not be the final optimized flow rate.

(D) *Oxygen interference optimization.* Choose a range where the oxygen interference check gases (see § 92.112) will fall in the upper 50 percent. Conduct this test with the oven temperature set as required. Oxygen interference check gas specifications are found in § 92.112.

(*1*) Zero the analyzer.

(*2*) Span the analyzer with the 21-percent oxygen blend.

(*3*) Recheck zero response. If it has changed more than 0.5 percent of full scale repeat paragraphs (a)(3)(ii)(D) (*1*) and (*2*) of this section.

(*4*) Introduce the 5 percent and 10 percent oxygen interference check gases.

(*5*) Recheck the zero response. If it has changed more ±1 percent of full scale, repeat the test.

(*6*) Calculate the percent of oxygen interference (%O_2I) for each mixture in step in paragraph (a)(3)(ii)(D)(*4*) of this section.

Percent O_2I=((B-Analyzer response (ppmC))/B)×(100)

Analyzer response=((A)/(Percent of full-scale analyzer response due to A))×(Percent of full-scale analyzer response due to B)

Where:

A=hydrocarbon concentration (ppmC) of the span gas used in step in paragraph (a)(3)(ii)(D)(*2*) of this section.

B=hydrocarbon concentration (ppmC) of the oxygen interference check gases used in step in paragraph (a)(3)(ii)(D)(*4*) of this section.

(*7*) The percent of oxygen interference (%O_2I) must be less than ±3.0 percent for all required oxygen interference check gases prior to testing.

(*8*) If the oxygen interference is greater than the specifications, incrementally adjust the air flow above and below the manufacturer's specifications, repeating paragraphs (a)(3)(ii)(D) (*1*) through (*7*) of this section for each flow.

(*9*) If the oxygen interference is greater than the specification after adjusting the air flow, vary the fuel flow and thereafter the sample flow, repeating paragraphs (a)(3)(ii)(D) (*1*) through (*7*) of this section for each new setting.

(*10*) If the oxygen interference is still greater than the specifications, repair or replace the analyzer, FID fuel, or burner air prior to testing. Repeat this section with the repaired or replaced equipment or gases.

(E) *Linearity check*. For each range used, check linearity as follows:

(*1*) With the fuel flow, air flow and sample flow adjust to meet the oxygen interference specification, zero the analyzer.

(*2*) Span the analyzer using a calibration gas that will provide a response of approximately 90 percent of full-scale concentration.

(*3*) Recheck the zero response. If it has changed more than 0.5 percent of full scale, repeat steps in paragraphs (a)(3)(ii)(E) (*1*) and (*2*) of this seciton.

(*4*) Record the response of calibration gases having nominal concentrations of 30, 60, and 90 percent of full-scale concentration. It is permitted to use additional concentrations.

(*5*) Perform a linear least square regression on the data generated. Use an equation of the form y = mx, where x is the actual chart deflection and y is the concentration.

(*6*) Use the equation z = y/m to find the linear chart deflection (z) for each calibration gas concentration (y).

(*7*) Determine the linearity (%L) for each calibration gas by:

Percent L=(100)(z − x)/(Full-scale linear chart deflection)

(*8*) The linearity criterion is met if the %L is less than ±2 percent for each data point generated. Below 40 ppmC the linearity criterion may be expanded to ±4 percent. For each emission test, a calibration curve of the form y = mx is to be used. The slope (m) is defined for each range by the spanning process.

(*9*) If the %L for any point exceeds the specifications in step in paragraph (a)(3)(ii)(E)(*8*) of this section, the air fuel, and sample-flow rates may be varied within the boundaries of the oxygen interference specifications.

(*10*) If the %L for any data point still exceeds the specifications, repair or replace the analyzer, FID fuel, burner air, or calibration bottles prior to testing. Repeat the procedures of this section with the repaired or replaced equipment or gases.

(F) *Optimized flow rates*. The fuel-flow rate, air-flow rate and sample-flow rate and sample-flow rate are defined as ''optimized'' at this point.

(iii) Alternative procedures may be used if approved in advance by the Administrator.

(4) After the optimum flow rates have been determined they are recorded for future reference.

(b) *Initial and periodic calibration*. Prior to introduction into service and monthly thereafter, the HFID hydrocarbon analyzer shall be calibrated on all normally used instrument ranges. Use the same flow rate and pressures as when analyzing samples. Calibration gases shall be introduced directly at the analyzer.

(1) Adjust analyzer to optimize performance.

(2) Zero the hydrocarbon analyzer with zero-grade air.

(3) Calibrate on each used operating range with propane-in-air calibration gases having nominal concentrations of 15, 30, 45, 60, 75 and 90 percent of that range. For each range calibrated, if the deviation from a least-squares best-fit straight line is 2 percent or less of the value at each data point, concentration values may be calculated by use of single calibration factor for that range. If the deviation exceeds 2 percent at any point, the best-fit non-linear equation which represents the data to within 2 percent of each test point shall be used to determine concentration.

FIGURE TO §92.119

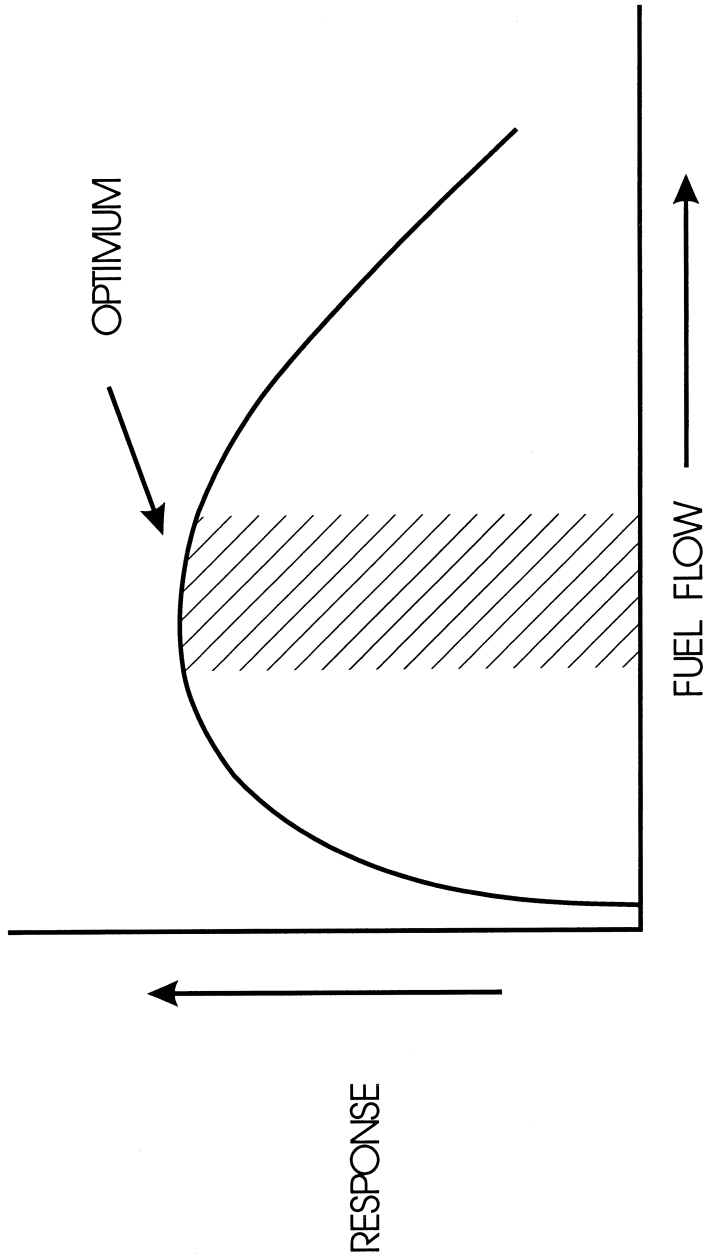

Figure B119-1 RESPONSE VS. FUEL FLOW

§ 92.120 NDIR analyzer calibration and checks.

(a) *NDIR water rejection ratio check.* (1) Zero and span the analyzer on the lowest range that will be used.

(2) Introduce a saturated mixture of water and zero gas at room temperature directly to the analyzer.

(3) Determine and record the analyzer operating pressure (GP) in absolute units in Pascal. Gauges G3 and G4 may be used if the values are converted to the correct units.

(4) Determine and record the temperature of the zero-gas mixture.

(5) Record the analyzers' response (AR) in ppm to the saturated zero-gas mixture.

(6) For the temperature recorded in paragraph (a)(4) of this section, determine the saturation vapor pressure.

(7) Calculate the water concentration (Z) in the mixture from:

$$Z=(PWB/GP)(10^6)$$

(8) Calculate the water rejection ratio (WRR) from:

$$WRR=(Z/AR)$$

(b) *NDIR CO_2 rejection ratio check.* (1) Zero and span the analyzer on the lowest range that will be used.

(2) Introduce a CO_2 calibration gas of at least 10 percent CO_2 or greater to the analyzer.

(3) Record the CO_2 calibration gas concentration in ppm.

(4) Record the analyzers' response (AR) in ppm to the CO_2 calibration gas.

(5) Calculate the CO_2 rejection ratio (CO_2RR) from:

$$CO_2RR=(ppm\ CO_2)/AR$$

(c) *NDIR analyzer calibration.* (1) Detector optimization. If necessary, follow the manufacturer's instructions for initial start-up and basic operating adjustments.

(2) Calibration curve. Develop a calibration curve for each range used as follows:

(i) Zero the analyzer.

(ii) Span the analyzer to give a response of approximately 90 percent of full-scale chart deflection.

(iii) Recheck the zero response. If it has changed more than 0.5 percent of full scale, repeat steps in paragraphs (c)(2)(i) and (c)(2)(ii) of this section.

(iv) Record the response of calibration gases having nominal concentrations of 15, 30, 45, 60, 75, and 90 percent of full-scale concentration.

(v) Generate a calibration curve. The calibration curve shall be of fourth order or less, have five or fewer coefficients, and be of the form of equation (1) or (2). Include zero as a data point. Compensation for known impurities in the zero gas can be made to the zero-data point. The calibration curve must fit the data points within 2 percent of point or 1 percent of full scale, whichever is less. Equations (1) and (2) follow:

$$y = Ax^4+Bx^3+Cx^2+Dx+E \quad (1)$$
$$y = x/(Ax^4+Bx^3+Cx^2+Dx+E) \quad (2)$$

where:

y = concentration.
x = chart deflection.

(vi) Option. A new calibration curve need not be generated if:

(A) A calibration curve conforming to paragraph (c)(2)(v) of this section exists;

(B) The responses generated in paragraph (c)(2)(iv) of this section are within 1 percent of full scale or 2 percent of point, whichever is less, of the responses predicted by the calibration curve for the gases used in paragraph (c)(2)(iv) of this section.

(vii) If multiple range analyzers are used, only the lowest range must meet the curve fit requirements below 15 percent of full scale.

(3) If any range is within 2 percent of being linear a linear calibration may be used. To determine if this criterion is met:

(i) Perform a linear least-square regression on the data generated. Use an equation of the form y=mx, where x is the actual chart deflection and y is the concentration.

(ii) Use the equation z=y/m to find the linear chart deflection (z) for each calibration gas concentration (y).

(iii) Determine the linearity (%L) for each calibration gas by:

$$\text{Percent } L=(100)(z-x)/(\text{Full-scale chart deflection})$$

(iv) The linearity criterion is met if the %L is less than ±2 percent for each data point generated. For each emission test, a calibration curve of the

form y=mx is to be used. The slope (m) is defined for each range by the spanning process.

§ 92.121 Oxides of nitrogen analyzer calibration and check.

(a) *Quench checks; NO_X analyzer.* (1) Perform the reaction chamber quench check for each model of high vacuum reaction chamber analyzer prior to initial use.

(2) Perform the reaction chamber quench check for each new analyzer that has an ambient pressure or ''soft vacuum'' reaction chamber prior to initial use. Additionally, perform this check prior to reusing an analyzer of this type any time any repairs could potentially alter any flow rate into the reaction chamber. This includes, but is not limited to, sample capillary, ozone capillary, and if used, dilution capillary.

(3) Quench check as follows:

(i) Calibrate the NO_X analyzer on the lowest range that will be used for testing.

(ii) Introduce a mixture of CO_2 calibration gas and NO_X calibration gas to the CL analyzer. Dynamic blending may be used to provide this mixture. Dynamic blending may be accomplished by analyzing the CO_2 in the mixture. The change in the CO_2 value due to blending may then be used to determine the true concentration of the NO_X in the mixture. The CO_2 concentration of the mixture shall be approximately equal to the highest concentration experienced during testing. Record the response.

(iii) Recheck the calibration. If it has changed more than ±1 percent of full scale, recalibrate and repeat the quench check.

(iv) Prior to testing, the difference between the calculated NO_X response and the response of NO_X in the presence of CO_2 (step in paragraph (a)(3)(ii) of this section must not be greater than 3.0 percent of full-scale. The calculated NO_X response is based on the calibration performed in step in paragraph (a)(3)(i) this section.

(b) *Oxides of nitrogen analyzer calibration.* (1) Every 30 days, perform a converter-efficiency check (see paragraph (b)(2) of this section) and a linearity check (see paragraph (b)(3) of this section).

(2) Converter-efficiency check. The apparatus described and illustrated in Figure B121–1 of this section is to be used to determine the conversion efficiency of devices that convert NO_2 to NO. The following procedure is to be used in determining the values to be used in the equation below:

(i) Follow the manufacturer's instructions for instrument startup and operation.

(ii) Zero the oxides of nitrogen analyzer.

(iii) Connect the outlet of the NO_X generator to the sample inlet of the oxides of nitrogen analyzer which has been set to the most common operating range.

(iv) Introduce into the NO_X generator-analyzer system a span gas with a NO concentration equal to approximately 80 percent of the most common operating range. The NO_2 content of the gas mixture shall be less than 5 percent of the NO_X concentration.

(v) With the oxides of nitrogen analyzer in the NO Mode, record the concentration of NO indicated by the analyzer.

(vi) Turn on the NO_X generator O_2 (or air) supply and adjust the O_2 (or air) flow rate so that the NO indicated by the analyzer is about 10 percent less than indicated in step in paragraph (b)(2)(v) of this section. Record the concentration of NO in this $NO+O_2$ mixture.

(vii) Switch the NO_X generator to the generation mode and adjust the generation rate so that the NO measured on the analyzer is 20 percent of that measured in step in paragraph (b)(2)(v) of this section. There must be at least 10 percent unreacted NO at this point. Record the concentration of residual NO.

(viii) Switch the oxides of nitrogen analyzer to the NO_X mode and measure total NO_X. Record this value.

(ix) Switch off the NO_X generation, but maintain gas flow through the system. The oxides of nitrogen analyzer will indicate the total NO_X in the $NO+O_2$ mixture. Record this value.

(x) Turn off the NO_X generator O_2 (or air) supply. The analyzer will now indicate the total NO_X in the original NO

in N_2 mixture. This value should be no more than 5 percent above the value indicated in step in paragraph (b)(2)(iv) of this section.

(xi) Calculate the efficiency of the NO_X converter by substituting the concentrations obtained into the following equation:

(A) Percent Efficiency=(1+(a−b)/(c−d))(100)

where:

a=concentration obtained in paragraph (b)(2)(viii) of this section.
b=concentration obtained in paragraph (b)(2)(ix) of this section.
c=concentration obtained in paragraph (b)(2)(vi) of this section.
d=concentration obtained in paragraph (b)(2)(vii) of this section.

(B) The efficiency of the converter shall be greater than 90 percent. Adjustment of the converter temperature may be necessary to maximize the efficiency. If the converter does not meet the conversion-efficiency specifications, repair or replace the unit prior to testing. Repeat the procedures of this section with the repaired or new converter.

(3) Linearity check. For each range used, check linearity as follows:

(i) With the operating parameters adjusted to meet the converter efficiency check and the quench checks, zero the analyzer.

(ii) Span the analyzer using a calibration gas that will give a response of approximately 90 percent of full-scale concentration.

(iii) Recheck the zero response. If it has changed more than 0.5 percent of full scale, repeat steps in paragraphs (b)(3)(i) and (b)(3)(ii) of this section.

(iv) Record the response of calibration gases having nominal concentrations of 30, 60 and 90 percent of full-scale concentration. It is permitted to use additional concentrations.

(v) Perform a linear least-square regression on the data generated. Use an equation of the form y=mx where x is the actual chart deflection and y is the concentration.

(vi) Use the equation z=y/m to find the linear chart deflection (z) for each calibration gas concentration (y).

(vii) Determine the linearity (%L) for each calibration gas by:

Percent L=(100)(z−x)/(Full-scale chart deflection)

(viii) The linearity criterion is met if the %L is less than ±2 percent of each data point generated. For each emission test, a calibration curve of the form y=mx is to be used. The slope (m) is defined for each range by the spanning process.

(ix) If the %L exceeds ±2 percent for any data point generated, repair or replace the analyzer or calibration bottles prior to testing. Repeat the procedures of this section with the repaired or replaced equipment or gases.

(x) Perform a converter-efficiency check (see paragraph (b)(2) of this section).

(xi) The operating parameters are defined as ''optimized'' at this point.

(4) Converter checking gas. If the converter quick-check procedure is to be employed, paragraph (b)(5) of this section, a converter checking gas bottle must be named. The following naming procedure must occur after each converter efficiency check, paragraph (b)(2) of this section.

(i) A gas bottle with an NO_2 concentration equal to approximately 80 percent of the most common operation range shall be designated as the converter checking gas bottle. Its NO concentration shall be less than 25 percent of its NO_2 concentration, on a volume basis.

(ii) On the most common operating range, zero and span the analyzer in the NO_X mode. Use a calibration gas with a concentration equal to approximately 80 percent of the range for spanning.

(iii) Introduce the converter checking gas. Analyze and record concentrations in both the NO_X mode (X) and NO mode (Y).

(iv) Calculate the concentration of the converter checking gas using the results from step in paragraph (b)(4)(iii) of this section and the converter efficiency from paragraph (b)(2) of this section as follows:

Concentration=(((X–Y)(100))/Efficiency)+Y

(5) Converter quick-check.

(i) Span the analyzer in the normal manner (NO_X mode) for the most common operating range.

(ii) Analyze the converter checking gas in the NO_X mode, record the concentration.

(iii) Compare the observed concentration with the concentration assigned under the procedure in paragraph (b)(4) of this section. If the observed concentration is equal to or greater than 90 percent of the assigned concentration, the converter operation is satisfactory.

(c) *Initial and periodic calibration.* Prior to its introduction into service and monthly thereafter, the chemiluminescent oxides of nitrogen analyzer shall be calibrated on all normally used instrument ranges. Use the same flow rate as when analyzing samples. Proceed as follows:

(1) Adjust analyzer to optimize performance.

(2) Zero the oxides of nitrogen analyzer with zero-grade air or zero-grade nitrogen.

(3) Calibrate on each normally used operating range with NO-in-N_2 calibration gases with nominal concentrations of 15, 30, 45, 60, 75 and 90 percent of that range. For each range calibrated, if the deviation from a least-squares best-fit straight line is 2 percent or less of the value at each data point, concentration values may be calculated by use of a single calibration factor for that range. If the deviation exceeds 2 percent at any point, the best-fit non-linear equation which represents the data to within 2 percent of each test point shall be used to determine concentration.

(d) If a stainless steel NO_2 to NO converter is used, condition all new or replacement converters. The conditioning consists of either purging the converter with air for a minimum of 4 hours or until the converter efficiency is greater than 90 percent. The converter must be at operational temperature while purging. Do not use this procedure prior to checking converter efficiency on in-use converters.

FIGURE TO § 92.121

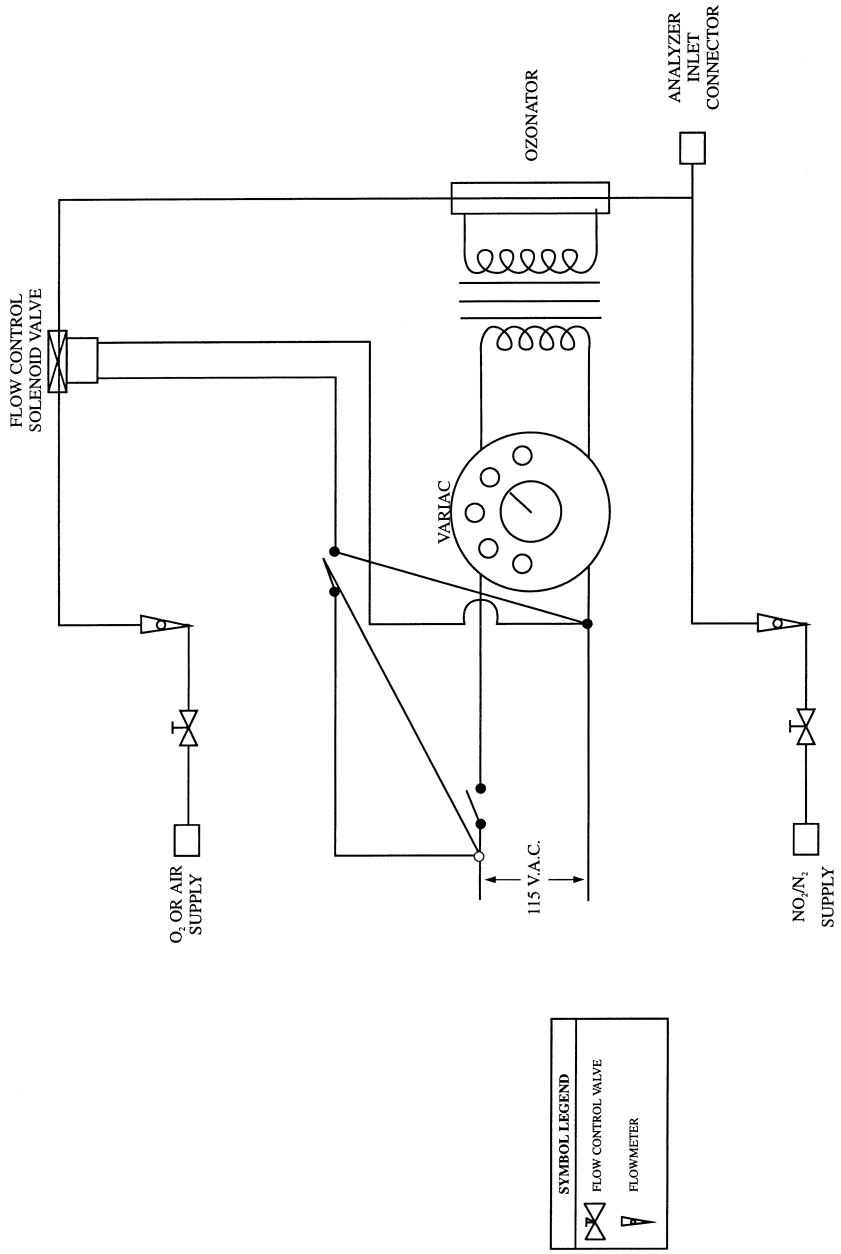

Figure B121-1 NOx CONVERTER EFFICIENCY DETECTOR

§ 92.122 Smoke meter calibration.

The smokemeter shall be checked according to the following procedure prior to each test:

(a) The zero control shall be adjusted under conditions of ''no smoke'' to give a recorder or data collection equipment response of zero;

(b) Calibrated neutral density filters having approximately 10, 20, and 40 percent opacity shall be employed to check the linearity of the instrument. The filter(s) shall be inserted in the light path perpendicular to the axis of the beam and adjacent to the opening from which the beam of light from the light source emanates, and the recorder response shall be noted. Filters with exposed filtering media should be checked for opacity every six months; all other filters shall be checked every year, using NIST or equivalent reference filters. Deviations in excess of 1 percent of the nominal opacity shall be corrected.

§ 92.123 Test procedure; general requirements.

(a) The locomotive/locomotive engine test procedure is designed to determine the brake specific emissions of hydrocarbons (HC, total or non-methane as applicable), total hydrocarbon equivalent (THCE) and aldehydes (as applicable), carbon monoxide (CO), oxides of nitrogen (NO_X), and particulates, and the opacity of smoke emissions. The test procedure consists of measurements of brake specific emissions and smoke opacity at each throttle position and of measurements of smoke opacity during each change in throttle position as engine power is increased. If less than 2 percent of the total exhaust flow is removed for gaseous and particulate sampling in notches 1 through 8, and if less than 4 percent of the total exhaust flow is removed for gaseous and particulate sampling at idle and dynamic brake, all measurements of gaseous, particulate and smoke emissions may be performed during one test sequence. If more than 2 percent, or 4 percent as applicable, of the total exhaust is removed for gaseous and particulate sampling, measurements of gaseous, and particulate emissions are performed during one test sequence, and a second test sequence is performed for the measurement of smoke.

(1) In the raw exhaust sampling procedure, sample is collected directly from the exhaust stream during each throttle setting. Particulates are collected on filters following dilution with ambient air of another raw exhaust sample. The fuel flow rate for each throttle setting is measured.

(2) For locomotives with multiple exhaust stacks, smoke testing is only required for one of the exhaust stacks provided the following conditions are met:

(i) The stack that is not tested is not visibly smokier than the stack that is tested; and

(ii) None of the measured opacity values for the stack tested are not greater than three-quarters of the level allowed by any of the applicable smoke standards.

(b) The test consists of prescribed sequences of engine operating conditions (see §§ 92.124 and 92.126) to be conducted either on a locomotive; or with the engine mounted on an engine dynamometer, or attached to a locomotive alternator/generator.

(1) *Locomotive testing.* (i) The electrical power output produced by the alternator/generator at each throttle setting is recorded as measurements of either the wattmeter or the output voltage, phase angle, and current flow through the electrical resistance bank.

(ii) The locomotive fuel supply system shall be disconnected and a system capable of measuring the net rate at which fuel is supplied to the engine (accounting for fuel recycle) shall be connected.

(2) *Engine testing.* (i) When the test is performed using a dynamometer, engine torque and rpm shall be recorded during each throttle setting.

(ii) The complete engine shall be tested, with all emission control devices, and charge air cooling equipment installed and functioning.

(iii) On air-cooled engines, the engine cooling fan shall be installed.

(iv) Additional accessories (e.g., air compressors) shall be installed or their loading simulated if typical of the in-

use application. In the case of simulated accessory loadings, the manufacturer shall make available to the Administrator documentation which shows that the simulated loading is representative of in-use operation. Power for accessories necessary to operate the engine (such as fuel pumps) shall be treated as parasitic losses and would not be included in the engine power output for purposes of calculating brake specific emissions.

(v) The engine may be equipped with a production type starter.

(vi) Means of engine cooling shall be used which will maintain the engine operating temperatures (e.g., temperatures of intake air downstream of charge air coolers, oil, water, etc.) at approximately the same temperature as would occur in a locomotive at each test point under the equivalent ambient conditions. In the case of engine intake air after compression and cooling in the charge air cooler(s), the temperature of the air entering the engine shall be within ±5 °F, at each test point, of the typical temperatures occurring in locomotive operations under ambient conditions represented by the test. Auxiliary fan(s) may be used to maintain engine cooling during operation on the dynamometer. Rust inhibitors and lubrication additives may be used, up to the levels recommended by the additive manufacturer. If antifreeze is to be used in the locomotive application, antifreeze mixtures and other coolants typical of those approved for use in the locomotive may be used.

(vii) The provisions of paragraph (b)(1)(i) of this section apply to engine testing using a locomotive alternator/generator instead of a dynamometer.

§ 92.124 Test sequence; general requirements.

(a) *Air temperature.* (1) The temperature of dilution air for the particulate sample dilution tunnel shall comply with the requirements of § 92.114 throughout the test sequence.

(2) For the testing of locomotives and engines, the ambient (test cell or out-of-door) air temperature, the temperature of the engine intake air, and the temperature of the air which provides cooling for the engine charge air cooling system shall be between 45 °F (7 °C) and 105 °F (41 °C) throughout the test sequence. Manufacturers and remanufacturers may test at higher temperatures without approval from the Administrator, but no corrections are allowed for the deviations from test conditions.

(b) For the testing of locomotives and engines, the atmospheric pressure shall be between 31.0 inches Hg and 26.0 inches Hg throughout the test sequence. Manufacturers and remanufacturers may test at lower pressures without approval from the Administrator, but no corrections are allowed for the deviations from test conditions.

(c) No control of humidity is required for ambient air, engine intake air or dilution air.

(d) *Flow restrictions*—(1) *Locomotive testing.* Restrictions to the flow of air into the engine and of exhaust out of the engine shall be those inherent to the locomotive. No adjustments or changes shall be made to these parameters. The temperature of the inlet fuel to the engine shall not exceed 125 °F.

(2) *Engine testing.* (i) Air inlet and exhaust restrictions shall be set to represent the average restrictions which would be seen in use in a representative application.

(ii) Inlet depression and exhaust backpressure shall be set with the engine operating at rated speed and maximum power, i.e., throttle notch 8.

(iii) The locations at which the inlet depression and exhaust backpressure are measured shall be specified by the manufacturer or remanufacturer.

(iv) The settings shall be made during the preconditioning.

(e) Pre-test engine measurements (e.g., idle and throttle notch speeds, fuel flows, etc.), pre-test engine performance checks (e.g., verification of engine power, etc.) and pre-test system calibrations (e.g., inlet and exhaust restrictions, etc.) can be done during engine preconditioning, or at the manufacturer's convenience subject to the requirements of good engineering practice.

(f) The required test sequence is described in Table B124–1 of this section, as follows:

TABLE B124–1—TEST SEQUENCE FOR LOCOMOTIVES AND LOCOMOTIVE ENGINES

Mode No.	Notch setting	Time in notch	Emissions measured [2]	Power, and fuel consumption measured
Warmup	Notch 8	5 ± 1 min	None	None.
Warmup	Lowest Idle	15 min maximum	None	None.
1a	Low Idle [1]	6 min minimum	All	Both.
1	Normal Idle	6 min minimum	All	Both.
2	Dynamic Brake [1]	6 min minimum	All	Both.
3	Notch 1	6 min minimum	All	Both.
4	Notch 2	6 min minimum	All	Both.
5	Notch 3	6 min minimum	All	Both.
6	Notch 4	6 min minimum	All	Both.
7	Notch 5	6 min minimum	All	Both.
8	Notch 6	6 min minimum	All	Both.
9	Notch 7	6 min minimum	All	Both.
10	Notch 8	15 min minimum	All	Both.

[1] Omit if not so equipped.
[2] The EPA test sequence for locomotives and locomotive engines may be performed once, with gaseous, particulate and smoke measurements performed simultaneously, or it may be performed twice with gaseous, and particulate measurements performed during one test sequence and smoke measurements performed during the other test sequence.

§ 92.125 Pre-test procedures and preconditioning.

(a) *Locomotive testing*. (1) Determine engine lubricating oil and coolant levels and fill as necessary to manufacturers recommended full levels.

(2) Connect fuel supply system and purge as necessary; determine that the fuel to be used during emission testing is in compliance with the specifications of § 92.113.

(3) Install instrumentation, engine loading equipment and sampling equipment as required.

(4) Operate the engine until it has reached the specified operating temperature.

(b) *Engine testing*. (1) Determine engine lubricating oil level and fill as necessary to manufacturers recommended full level.

(2)(i) Connect fuel supply system and purge as necessary; determine that the fuel to be used during emission testing is in compliance with the specifications of § 92.113.

(ii) Connect engine cooling system.

(3) Install instrumentation, and sampling equipment as required. Couple the engine to the dynamometer or locomotive alternator/generator.

(4) Start cooling system.

(5) Operate the engine until it has reached the specified operating temperature.

(6) Establish that the temperature of intake air entering the engine after compression and cooling in the charge air cooler(s), at each test point, is within ±5 °F of the temperatures which occur in locomotive operations at the ambient temperature represented by the test.

(c) *Both locomotive and engine testing*. (1) Allow a minimum of 30 minutes warm-up in the stand-by or operating mode prior to spanning the analyzers.

(2) Replace or clean filter elements (sampling and analytical systems) as necessary, and then vacuum leak check the system, § 92.118. A pressure leak check is also permitted per § 92.118. Allow the heated sample line, filters, and pumps to reach operating temperature.

(3) Perform the following system checks:

(i) If a stainless steel NO_2 to NO converter is used, purge the converter with air (zero-grade air, room air, or O_2) for a minimum of 30 minutes. The converter must be at operational temperature while purging.

(ii) Check the sample system temperatures (see § 92.114).

(iii) Check the system response time (see § 92.118). System response time may be applied from the most recent check of response time if all of the following are met:

(A) The flow rate for each flow meter is equal to or greater than the flow rate recorded in § 92.118.

(B) For analyzers with capillaries, the response time from the sample/span valve is measured using in-use pressures and bypass flows (see § 92.118).

(C) The response time measured in step in paragraph (c)(3)(iii)(B) of this section is equal to or less than the slowest response time determined for *Capillary flow analyzers* in § 92.118 plus 2 seconds.

(iv) A hang-up check is permitted.

(v) A converter-efficiency check is permitted. The check need not conform to § 92.121. The test procedure may be aborted at this point in the procedure in order to repair the NO_2 to NO converter. If the test is aborted, the converter must pass the efficiency check described in § 92.121 prior to starting the test run.

(4) Introduce the zero-grade gases at the same flow rates and pressures used to calibrate the analyzers and zero the analyzers on the lowest anticipated range that will be used during the test. Immediately prior to each test, obtain a stable zero for each anticipated range that will be used during the test.

(5) Introduce span gases to the instruments under the same flow conditions as were used for the zero gases. Adjust the instrument gains on the lowest range that will be used to give the desired value. Span gases should have a concentration greater than 70 percent of full scale for each range used. Immediately prior to each test, record the response to the span gas and the span-gas concentration for each range that will be used during the test.

(6) Check the zero responses. If they have changed more than 0.5 percent of full scale, repeat paragraphs (c)(4) and (5) of this section.

(7) Check system flow rates and pressures. Note the values of gauges for reference during the test.

§ 92.126 Test run.

(a) The following steps shall be taken for each test:

(1) Prepare the locomotive, engine, dynamometer, (as applicable) and sampling system for the test. Change filters, etc. and leak check as necessary.

(2) Connect sampling equipment as appropriate for the sampling procedure employed; i.e. raw or dilute (evacuated sample collection bags, particulate, and raw exhaust sampling equipment, particulate sample filters, fuel flow measurement equipment, etc.).

(3) Start the particulate dilution tunnel, the sample pumps, the engine cooling fan(s) (engine dynamometer testing) and the data collection and sampling systems (except particulate sample collection). The heated components of any continuous sampling systems(s) (if applicable) shall be preheated to their designated operating temperatures before the test begins.

(4) Adjust the sample flow rates to the desired flow rates and set gas flow measuring devices to zero (particulate dilution tunnel).

(5) Read and record all required general and pre-test data (i.e., all required data other than data that can only be collected during or after the emission test).

(6) Warm-up the locomotive or locomotive engines according to normal warm-up procedures.

(7) Begin the EPA Test Sequence for Locomotives and Locomotive Engines (see § 92.124). Record all required general and test data throughout the duration of the test sequence.

(i) Mark the start of the EPA Test Sequence for Locomotives and Locomotive Engines on all data records.

(ii) Begin emission measurement after completing the warmup phase of the EPA Test Sequence for Locomotives and Locomotive Engines, as specified in paragraph (b) of this section. Mark the start and end of each mode on all data records.

(iii) A mode shall be voided where the requirements of this subpart that apply to that test mode are not met. This includes the following:

(A) The data acquisition is terminated prematurely; or

(B) For engine testing, the engine speed or power output exceeds the tolerance bands established for that mode; or

(C) Measured concentrations exceed the range of the instrument; or

(D) The test equipment malfunctions.

(iv) Modes within the test sequence shall be repeated if it is voided during the performance of the test sequence. A mode can be repeated by:

(A) Repeating the two preceding modes and then continuing with the test sequence, provided that the locomotive or engine is not shut down after the voided test mode; or

(B) Repeating the preceding mode and then continuing with the test sequence from that point, provided that the locomotive or engine is not operated in any mode with lower power than the preceding mode after the voided test mode. For example, if the Notch 2 mode is voided, then the locomotive or engine would be returned to Notch 1 while any repairs are made.

(b) *Sampling and measurement timing.* (1) Gaseous emissions shall be sampled and measured continuously.

(2)(i) Sampling of particulate emissions from the raw exhaust (for dilution) shall be conducted continuously.

(ii) Sampling of particulates from the diluted exhaust shall begin within ten seconds after the beginning of each test mode, and shall end six minutes after the beginning of each test mode.

(iii) Sampling of CO_2 in the dilution air and diluted exhaust does not need to be continuous, but the measurements used for the calculations must be made after the first two minutes of each mode.

(3) Fuel flow rate shall be measured continuously. The value reported for the fuel flow rate shall be a one-minute average of the instantaneous fuel flow measurements taken during the last minute of the minimum sampling period listed in Table B124–1 in § 92.124; except for testing during idle modes, where it shall be a three-minute average of the instantaneous fuel flow measurements taken during the last three minutes of the minimum sampling period listed in Table B124–1 in § 92.124. Sampling periods greater than one minute, but no greater than three minutes are allowed for modes 2, 3, and 4, where required by good engineering practice.

(4) Engine power shall be measured continuously. The value reported for the engine power shall be a one-minute average of the instantaneous power measurements taken during the last minute of the minimum sampling period listed in Table B124–1 in § 92.124.

(c) *Exhaust gas measurements.* (1) Should the analyzer response exceed 100 percent of full scale or respond less than 15 percent of full scale, the next higher or lower analyzer range shall be used.

(2) Each analyzer range that may be used during a test sequence must have the zero and span responses recorded prior to the execution of the test sequence. Only the range(s) used to measure the emissions during a test sequence are required to have their zero and span recorded after the completion of the test sequence.

(3) It is permitted to change filter elements between test modes, provided such changes do not cause a mode to be voided.

(4) A leak check is permitted between test modes, provided such changes do not cause a mode to be voided.

(5) A hang-up check is permitted between test modes, provided such changes do not cause a mode to be voided.

(6) If, during the emission measurement portions of a test, the value of the gauges downstream of the NDIR analyzer(s) differs by more than ±2 inches of water from the pretest value, the test is void.

(7)(i) For bag samples, as soon as possible transfer the exhaust and dilution air bag samples to the analytical system and process the samples.

(ii) A stabilized reading of the exhaust sample bag on all applicable analyzers shall be made within 20 minutes of the end of the sample collection phase of the mode.

§ 92.127 Emission measurement accuracy.

(a) Good engineering practice dictates that exhaust emission sample analyzer readings below 15 percent of full scale chart deflection should generally not be used.

(b) Some high resolution read-out systems such as computers, data loggers, etc., can provide sufficient accuracy and resolution below 15 percent of full scale. Such systems may be used provided that additional calibrations are made to ensure the accuracy of the calibration curves. The following procedure for calibration below 15 percent of full scale may be used:

(1) If a 16-point gas divider is used, 50 percent of the calibration points shall be below 10 percent of full scale. The gas divider shall conform to the accuracy requirements specified in § 92.112.

(2) If a 7- or 9-point gas divider is used, the gas divider shall conform to the accuracy requirements specified in § 92.112, and shall be used according to the following procedure:

(i) Span the full analyzer range using a top range calibration gas meeting the calibration gas accuracy requirements of § 92.112.

(ii) Generate a calibration curve according to, and meeting the applicable requirements of §§ 92.118 through 92.122.

(iii) Select a calibration gas (a span gas may be used for calibrating the CO_2 analyzer) with a concentration between the two lowest non-zero gas divider increments. This gas must be ''named'' to an accuracy of ±1.0 percent (±2.0 percent for CO_2 span gas) of NIST gas standards, or other standards approved by the Administrator.

(iv) Using the calibration curve fitted to the points generated in paragraphs (b)(2)(i) and (ii) of this section, check the concentration of the gas selected in paragraph (b)(2)(iii) of this section. The concentration derived from the curve shall be within ±2.3 percent (±2.8 percent for CO_2 span gas) of the gas' original named concentration.

(v) Provided the requirements of paragraph (b)(2)(iv) of this section are met, use the gas divider with the gas selected in paragraph (b)(2)(iii) of this section and determine the remainder of the calibration points. Fit a calibration curve per §§ 92.118 through 92.122 for the entire analyzer range.

§ 92.128 Particulate handling and weighing.

(a) At least 1 hour before the test, place each filter in a closed (to eliminate dust contamination) but unsealed (to permit humidity exchange) petri dish and place in a weighing chamber meeting the specifications of § 92.110(a) of this section for stabilization.

(b) At the end of the stabilization period, weigh each filter on the microbalance. This reading is the tare weight and must be recorded.

(c) The filter shall then be stored in a covered petri dish or a sealed filter holder until needed for testing. If the filters are transported to a remote test location, the filter pairs, stored in individual petri dishes, should be transported in sealed plastic bags to prevent contamination. At the conclusion of a test run, the filters should be removed from the filter holder, and placed face to face in a covered but unsealed petri dish, with the primary filter placed face up in the dish. The filters shall be weighed as a pair. If the filters need to be transported from a remote test site, back to the weighing chamber, the petri dishes should be placed in a sealed plastic bag to prevent contamination. Care should be taken in transporting the used filters such that they are not exposed to excessive, sustained direct sunlight, or excessive handling.

(d) After the emissions test, and after the sample and back-up filters have been returned to the weighing room after being used, they must be conditioned for at least 1 hour but not more than 80 hours and then weighed. This reading is the gross weight of the filter and must be recorded.

(e) The net weight of each filter is its gross weight minus its tare weight. Should the sample on the filter contact the petri dish or any other surface, the test is void and must be rerun.

(f) The particulate filter weight (Pf) is the sum of the net weight of the primary filter plus the net weight of the backup filter.

(g) The following optional weighting procedure is permitted:

(1) At the end of the stabilization period, weigh both the primary and back-up filters as a pair. This reading is the tare weight and must be recorded.

(2) After the emissions test, in removing the filters from the filter holder, the back-up filter is inverted on top of the primary filter. They must then be conditioned in the weighing chamber for at least 1 hour but not more than 80 hours. The filters are then weighed as a pair. This reading is the gross weight of the filters (Pf) and must be recorded.

(3) Paragraphs (a), (c), and (e) of this section apply to this option, except that the word ''filter'' is replaced by ''filters''.

§ 92.129 Exhaust sample analysis.

(a) The analyzer response may be read by automatic data collection (ADC) equipment such as computers, data loggers, etc. If ADC equipment is used the following is required:

(1) The response complies with § 92.130.

(2) The response required in paragraph (a)(1) of this section may be stored on long-term computer storage devices such as computer tapes, storage discs, or they may be printed in a listing for storage. In either case a chart recorder is not required and records from a chart recorder, if they exist, need not be stored.

(3) If the data from ADC equipment is used as permanent records, the ADC equipment and the analyzer values as interpreted by the ADC equipment are subject to the calibration specifications in §§ 92.118 through 92.122, as if the ADC equipment were part of the analyzer.

(b) Data records from any one or a combination of analyzers may be stored as chart recorder records.

(c) Software zero and span.

(1) The use of ''software'' zero and span is permitted. The process of software zero and span refers to the technique of initially adjusting the analyzer zero and span responses to the calibration curve values, but for subsequent zero and span checks the analyzer response is simply recorded without adjusting the analyzer gain. The observed analyzer response recorded from the subsequent check is mathematically corrected back to the calibration curve values for zero and span. The same mathematical correction is then applied to the analyzer's response to a sample of exhaust gas in order to compute the true sample concentration.

(2) The maximum amount of software zero and span mathematical correction is ±10 percent of full scale chart deflection.

(3) Software zero and span may be used to switch between ranges without adjusting the gain of the analyzer.

(4) The software zero and span technique may not be used to mask analyzer drift. The observed chart deflection before and after a given time period or event shall be used for computing the drift. Software zero and span may be used after the drift has been computed to mathematically adjust any span drift so that the ''after'' span check may be transformed into the ''before'' span check for the next mode.

(d) For sample analysis perform the following sequence:

(1) Warm-up and stabilize the analyzers; clean and/or replace filter elements, conditioning columns (if used), etc., as necessary.

(2) Leak check portions of the sampling system that operate at negative gauge pressures when sampling, and allow heated sample lines, filters, pumps, etc., to stabilize at operating temperature.

(3) Optional: Perform a hang-up check for the HFID sampling system:

(i) Zero the analyzer using zero air introduced at the analyzer port.

(ii) Flow zero air through the overflow sampling system, where an overflow system is used. Check the analyzer response.

(iii) If the overflow zero response exceeds the analyzer zero response by 2 percent or more of the HFID full-scale deflection, hang-up is indicated and corrective action must be taken.

(iv) The complete system hang-up check specified in paragraph (f) of this section is recommended as a periodic check.

(4) Obtain a stable zero reading.

(5) Zero and span each range to be used on each analyzer used prior to the beginning of the test sequence. The span gases shall have a concentration between 75 and 100 percent of full scale chart deflection. The flow rates and system pressures shall be approximately the same as those encountered during sampling. The HFID analyzer shall be zeroed and spanned through the overflow sampling system, where an overflow system is used.

(6) Re-check zero response. If this zero response differs from the zero response recorded in paragraph (d)(5) of this section by more than 1 percent of full scale, then paragraphs (d) (4), (5), and (6) of this section should be repeated.

(7) If a chart recorder is used, identify and record the most recent zero and span response as the pre-analysis values.

(8) If ADC equipment is used, electronically record the most recent zero and span response as the pre-analysis values.

(9) Measure (or collect a sample of) the emissions continuously during each mode of the test cycle. Indicate the start of the test, the range(s) used, and the end of the test on the recording medium (chart paper or ADC equipment). Maintain approximately the same flow rates and system pressures used in paragraph (d)(5) of this section.

(10)(i) Collect background HC, CO, CO_2, and NO_X in a sample bag (optional).

(ii) Measure the concentration of CO_2 in the dilution air and the diluted exhaust for particulate measurements.

(11) Perform a post-analysis zero and span check for each range used at the conditions specified in paragraph (d)(5) of this section. Record these responses as the post-analysis values.

(12) Neither the zero drift nor the span drift between the pre-analysis and post-analysis checks on any range used may exceed 3 percent for HC, or 2 percent for NO_X, CO, and CO_2, of full scale chart deflection, or the test is void. (If the HC drift is greater than 3 percent of full-scale chart deflection, hydrocarbon hang-up is likely.)

(13) Determine HC background levels (if necessary) by introducing the background sample into the overflow sample system.

(14) Determine background levels of NO_X, CO, or CO_2 (if necessary).

(e) HC hang-up. If HC hang-up is indicated, the following sequence may be performed:

(1) Fill a clean sample bag with background air.

(2) Zero and span the HFID at the analyzer ports.

(3) Analyze the background air sample bag through the analyzer ports.

(4) Analyze the background air through the entire sample probe system.

(5) If the difference between the readings obtained is 2 percent or more of the HFID full scale deflection:

(i) Clean the sample probe and the sample line;

(ii) Reassemble the sample system;

(iii) Heat to specified temperature; and

(iv) Repeat the procedure in this paragraph (e).

§ 92.130 Determination of steady-state concentrations.

(a)(1) For HC and NO_X emissions, a steady-state concentration measurement, measured after 300 seconds (or 840 seconds for notch 8) of testing shall be used instead of an integrated concentration for the calculations in § 92.132 if the concentration response meets either of the criteria of paragraph (b) of this section and the criterion of paragraph (c) of this section.

(2) For CO and CO_2 emissions, a steady-state concentration measurement, measured after 300 seconds (or 840 seconds for notch 8) of testing shall be used. The provisions of paragraphs (b) through (f) of this section do not apply for CO and CO_2 emissions.

(b) (1) The steady-state concentration is considered representative of the entire measurement period if the time-weighted concentration is not more than 10 percent higher than the steady-state concentration. The time-weighted concentration is determined by integrating the concentration response (with respect to time in seconds) over the first 360 seconds (or 900 seconds for notch 8) of measurement, and dividing the area by 360 seconds (or 900 seconds for notch 8).

(2) A steady-state concentration is considered representative of the entire measurement period if the estimated peak area is not more than 10 percent of the product of the steady-state concentration and 360 seconds (or 900 seconds for notch 8). The estimated peak area is calculated as follows, and as shown in Figure B130–1 of this section):

(i) Draw the peak baseline as a straight horizontal line intersecting the steady-state response.

(ii) Measure the peak height from the baseline with the same units as the steady-state concentration; this value is h.

(iii) Bisect the peak height by drawing a straight horizontal line halfway between the top of the peak and the baseline.

(iv) Draw a straight line from the top of the peak to the baseline such that it intersects the response curve at the same point at which the line described in paragraph (b)(2)(iii) of this section intersects the response curve.

(v) Determine the time between the point at which the notch was changed and the point at which the line described in paragraph (b)(2)(iv) of this section intersects the baseline; this value is t.

(vi) The estimated peak area is equal to the product of h and t, divided by 2.

(c) In order to be considered to be a steady-state measurement, a measured response may not vary by more than 5 percent after the first 60 seconds of measurement.

(d) For responses meeting either of the criteria of paragraph (b) of this section, but not meeting the criterion of paragraph (c) of this section, one of the following values shall be used instead of a steady-state or integrated concentration:

(1) The highest value of the response that is measured after the first 60 seconds of measurement (excluding peaks lasting less than 5 seconds, caused by such random events as the cycling of an air compressor); or

(2) The highest 60-second, time-weighted, average concentration of the response after the first 60 seconds of measurement.

(e) For responses not meeting the criterion in paragraph (c) of this section, the Administrator may require that the manufacturer or remanufacturer identify the cause of the variation, and demonstrate that it is not caused by a defeat device.

(f) The integrated concentration used for calculations shall be from the highest continuous 120 seconds of measurement.

(g) Compliance with paragraph (b)(2) of this section does not require calculation where good engineering practice allows compliance to be determined visually (i.e., that the area of the peak is much less than the limits set forth in paragraph (b)(2) of this section).

FIGURE TO § 92.130

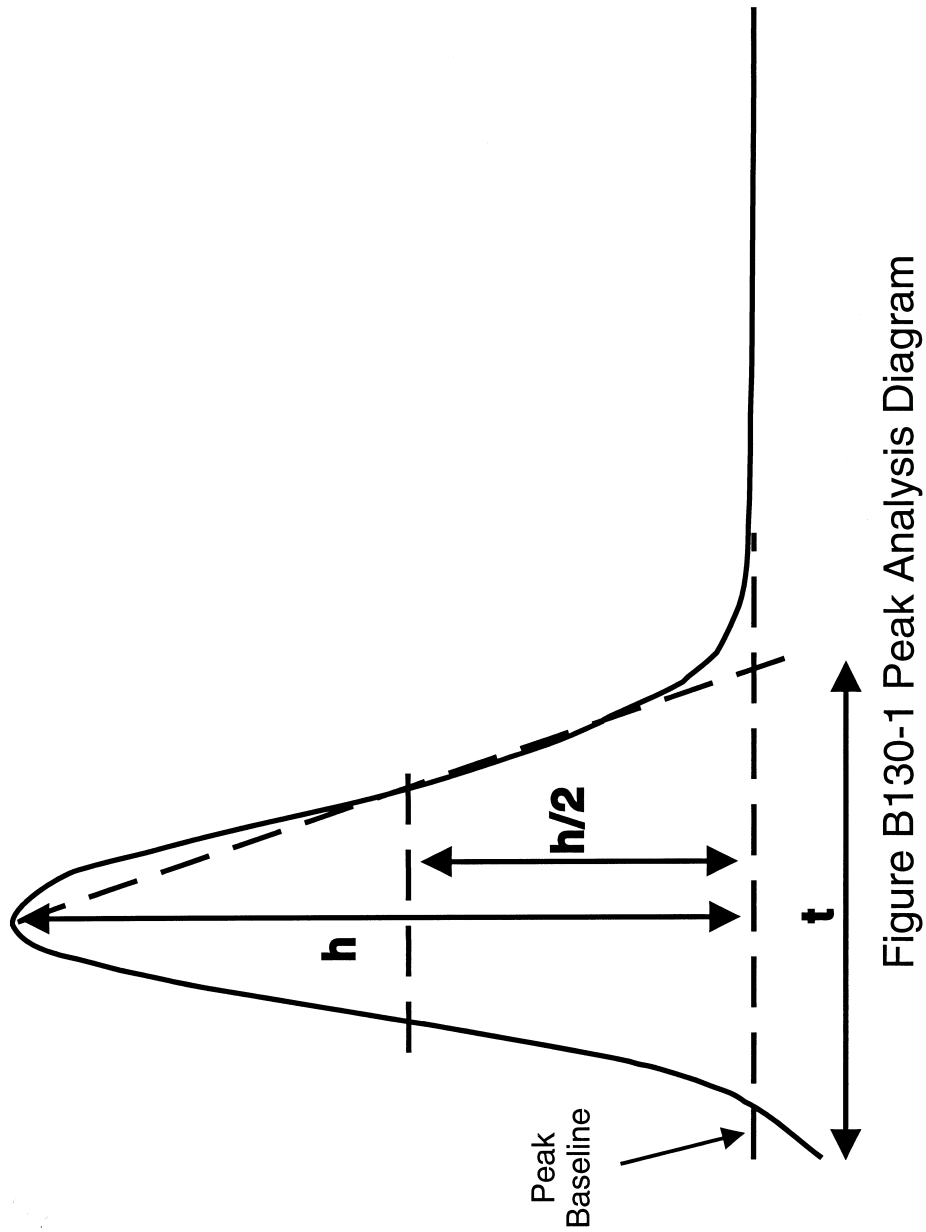

Figure B130-1 Peak Analysis Diagram

§ 92.131 Smoke, data analysis.

The following procedure shall be used to analyze the smoke test data:

(a) Locate each throttle notch test mode, or percent rated power setting test mode. Each test mode starts when

the throttle is placed in the mode and ends when the throttle is moved to the succeeding mode. The start of the first idle mode corresponds to the start of the test sequence.

(b) Analyze the smoke trace by means of the following procedure:

(1) Locate the highest reading, and integrate the highest 3-second average reading around it.

(2) Locate and integrate the highest 30-second average reading.

(3) The highest reading occurring more than two minutes after the notch change (excluding peaks lasting less than 5 seconds, caused by such random events as the cycling of an air compressor) is the ''steady-state'' value.

(c)(1) The values determined in paragraph (b) of this section shall be normalized by the following equation:

$$N_n = 100 \times \left[1 - \left[1 - \frac{N_m}{100} \right]^{1/L} \right]$$

Where:

N_n is the normalized percent opacity, N_m is the average measured percent opacity (peak or steady-state), and L is actual distance in meters from the point at which the light beam enters the exhaust plume to the point at which the light beam leaves the exhaust plume.

(2) The normalized opacity values determined in paragraph (c)(1) of this section are the values that are compared to the standards of subpart A of this part for determination of compliance.

(d) This smoke trace analysis may be performed by direct analysis of the recorder traces, or by computer analysis of data collected by automatic data collection equipment.

§ 92.132 Calculations.

(a) *Duty-cycle emissions.* This section describes the calculation of duty-cycle emissions, in terms of grams per brake horsepower hour (g/bhp-hr). The calculation involves the weighted summing of the product of the throttle notch mass emission rates and dividing by the weighted sum of the brake horsepower. The final reported duty-cycle emission test results are calculated as follows:

(1)(i) $E_{idc}=(\Sigma(M_{ij})(F_j))/(\Sigma(BHP_j)(F_j))$

Where:

E_{idc}=Duty-cycle weighted, brake-specific mass emission rate of pollutant i (i.e., HC, CO, NO_X or PM and, if appropriate, THCE or NMHC) in grams per brake horsepower-hour;

M_{ij}=the mass emission rate pollutant i for mode j;

F_j=the applicable weighting factor listed in Table B132–1 for mode j;

BHP_j=the measured brake horsepower for mode j.

(ii) Table B132–1 follows:

TABLE B132–1—WEIGHTING FACTORS FOR CALCULATING EMISSION RATES

Throttle notch setting	Test mode	Locomotive not equipped with multiple idle notches		Locomotive equipped with multiple idle notches	
		Line-haul	Switch	Line-haul	Switch
Low Idle	1a	NA	NA	0.190	0.299
Normal Idle	1	0.380	0.598	0.190	0.299
Dynamic Brake	2	0.125	0.000	0.125	0.000
Notch 1	3	0.065	0.124	0.065	0.124
Notch 2	4	0.065	0.123	0.065	0.123
Notch 3	5	0.052	0.058	0.052	0.058
Notch 4	6	0.044	0.036	0.044	0.036
Notch 5	7	0.038	0.036	0.038	0.036
Notch 6	8	0.039	0.015	0.039	0.015
Notch 7	9	0.030	0.002	0.030	0.002
Notch 8	10	0.162	0.008	0.162	0.008

(2) Example: For the line-haul cycle, for locomotives equipped with normal and low idle, and with dynamic brake, the brake-specific emission rate for HC would be calculated as:

$$E_{HCdc}=[(M_{HCla})(0.190)+(M_{HC1})(0.190)+(M_{HC2})(0.125)+(M_{HC3})(0.065)+(M_{HC4})(0.065)+(M_{HC5})(0.052)+(M_{HC6})(0.044)+(M_{HC7})(0.038)+(M_{HC8})(0.039)+(M_{HC9})(0.030)+(M_{HC10})(0.162)]/[(BHP_{1a})(0.190)+(BHP_1)(0.190)+(BHP_2)(0.125)+(BHP_3)(0.065)+(BHP_4)(0.065)+(BHP_5)(0.052)+(BHP_6)(0.044)+(BHP_7)(0.038)+(BHP_8)(0.039)+(BHP_9)(0.030)+(BHP_{10})(0.162)]$$

(3) In each mode, brake horsepower output is the power that the engine delivers as output (normally at the flywheel), as defined in § 92.2.

(i) For locomotive testing (or engine testing using a locomotive alternator/generator instead of a dynamometer), brake horsepower is calculated as:

$$BHP=HP_{out}/A_{eff}+HP_{acc}$$

Where:

HP_{out}=Measured horsepower output of the alternator/generator.

A_{eff}=Efficiency of the alternator/generator.

HP_{acc}=Accessory horsepower.

(ii) For engine dynamometer testing, brake horsepower is determined from the engine speed and torque.

(4) For locomotive equipped with features that shut the engine off after prolonged periods of idle, the measured mass emission rate M_{i1} (and M_{i1a} as applicable) shall be multiplied by a factor equal to one minus the estimated fraction reduction in idling time that will result in use from the shutdown feature. Application of this adjustment is subject to the Administrator's approval.

(b) *Throttle notch emissions.* This paragraph (b) describes the calculation of throttle notch emissions for all operating modes, including: idle (normal and low, as applicable); dynamic brake; and traction power points. The throttle notch (operating mode) emission test results, final reported values and values used in paragraph (a)(1) of this section are calculated as follows:

(1) Brake specific emissions (E_{ij}) in grams per brake horsepower-hour of each species i (i.e., HC, CO, NO_X or PM and, if appropriate, THCE or NMHC) for each mode j:

(i) $E_{HC\ mode}$=HC grams/BHP-hr=$M_{HC\ mode}$/Measured BHP in mode.

Where:

$M_{HC\ mode}$=Mass HC emissions (grams per hour) for each test mode.

(ii) $E_{THCE\ mode}$=THCE grams/BHP-hr=$M_{THCE\ mode}$/Measured BHP in mode.

Where:

$M_{THCE\ mode}$ (Total hydrocarbon equivalent mass emissions (grams per hour) for each test mode):

$=M_{HCj}+\Sigma\ (M_{ij})\ (MWC_p)/MWC_i$

M_{ij}=the mass emission rate oxygenated pollutant i for mode j.

MWC_i=the molecular weight of pollutant i divided by the number of carbon atoms per molecule of pollutant i.

MWC_p=the molecular weight of a typical petroleum fuel component divided by the number of carbon atoms per molecule of a typical petroleum fuel component=13.8756.

(iii) $E_{NMHC\ mode}$=NMHC grams/BHP-hr=$M_{NMHC\ mode}$/Measured BHP in mode.

Where:

$M_{NMHC\ mode}$=Mass NMHC emissions (grams per hour) for each test mode.

(iv) $E_{CO\ mode}$=CO grams/BHP-hr=$M_{CO\ mode}$/Measured BHP in mode.

Where:

$M_{CO\ mode}$=Mass CO emissions (grams per hour) for each test mode.

(v) $E_{NOx\ mode}$=NO_X grams/BHP–hr=$M_{NOx\ mode}$/Measured BHP in mode.

Where:

$M_{NOx\ mode}$=Mass NO_X emissions (grams per hour) for each test mode.

(vi) $E_{PM\ mode}$=PM grams/BHP–hr=$M_{PM\ mode}$/Measured BHP in mode.

Where:

$M_{PM\ mode}$=Mass PM emissions (grams per hour) for each test mode.

(vii) $E_{AL\ mode}$=Aldehydes grams/BHP–hr=$M_{AL\ mode}$/Measured BHP in mode.

(vii) $E_{AL\ mode}$=Aldehydes grams/BHP–hr=$M_{AL\ mode}$/Measured BHP in mode.

Where:

$M_{AL\ mode}$=Total aldehyde mass emissions (grams per hour) for each test mode.

(2) Mass Emissions—Raw exhaust measurements. For raw exhaust measurements mass emissions (grams per hour) of each species for each mode:

(i) General equations. (A) The mass emission rate, $M_{X\ mode}$ (g/hr), of each

pollutant (HC, NO_X, CO_2, CO, CH_4 CH_3OH, CH_3CH_2OH, CH_2O, CH_3CH_2O) for each operating mode for raw measurements is determined based on one of the following equations:

$M_{X\ mode}=(DX/10^6)(DVol)(MW_X/V_m)$
$M_{X\ mode}=(WX/10^6)(WVol)(MW_X/V_m)$

Where:

X designates the pollutant (e.g., HC), DX is the concentration of pollutant X (ppm or ppmC) on a dry basis, MW_X is the molecular weight of the pollutant (g/mol), DVol is the total exhaust flow rate (ft^3/hr) on a dry basis, WX is the concentration of pollutant X (ppm or ppmC) on a wet basis, WVol is the total exhaust flow rate (ft^3/hr) on a wet basis, V_m is the volume of one mole of gas at standard temperature and pressure (ft^3/mol).

(B) All measured volumes and volumetric flow rates must be corrected to standard temperature and pressure prior to calculations.

(ii) The following abbreviations and equations apply to this paragraph (b)(2):

α=Atomic hydrogen/carbon ratio of the fuel.
β=Atomic oxygen/carbon ratio of the fuel.
CMW_f=Molecular weight of the fuel per carbon atom, or carbon molecular weight (g/moleC)=$(12.011+1.008\alpha+16.000\beta)$.
DCO=CO concentration in exhaust, ppm (dry).
DCO_2=CO_2 concentration in exhaust, percent (dry).
DHC=HC carbon concentration in exhaust, ppm C (dry).
DNOX=NO_X concentration in exhaust, in ppm (dry).
DVol=Total exhaust flow rate (ft^3/hr) on a dry basis; or
$=(V_m)(W_f)/((CMW_f)\ (DHC/10^6+DCO/10^6+DCO2/100))$.
K=Water gas equilibrium constant=3.5.
K_w=Wet to dry correction factor.
M_F=Mass flow-rate of fuel used in the engine in lb/hr=W_f/453.59.
MW_C=Atomic weight of carbon=12.011.
MW_{CO}=Molecular weight of CO=28.011.
MW_H=Atomic weight of hydrogen=1.008.
MW_{NO2}=Molecular weight of nitrogen dioxide (NO_2)=46.008.
MW_O=Molecular weight of atomic oxygen=16.000.
T=Temperature of inlet air (°F).
V_m=Volume of one mole of gas at standard temperature and pressure (ft^3/mole).
W_f=Mass flow-rate of fuel used in the engine, in grams/hr=(453.59)×(M_f lbs/hr).
WCO_2=CO_2 concentration in exhaust, percent (wet).
WHC=HC concentration in exhaust, ppm C (wet).
WVol=Total exhaust flow rate (ft^3/hr) on a wet basis; or
$=(V_m)(W_f)/((CMW_f)(WHC/10^6+WCO/10^6\ WCO2/100))$.

(iii) Calculation of individual pollutant masses. Calculations for mass emission are shown here in multiple forms. One set of equations is used when sample is analyzed dry (equations where the concentrations are expressed as DX), and the other set is used when the sample is analyzed wet (equations where the concentrations are expressed as WX). When samples are analyzed for some constituents dry and for some constituents wet, the wet concentrations must be converted to dry concentrations, and the equations for dry concentrations used. Also, the equations for HC, NMHC, CO, and NO_X have multiple forms that are algebraically equivalent: An explicit form that requires intermediate calculation of V_m and DVol or WVol; and an implicit form that uses only the concentrations (e.g., DCO) and the mass flow rate of the fuel. For these calculations, either form may be used.

(A) Hydrocarbons and nonmethane hydrocarbons.

(*1*) Hydrocarbons. (*i*) *For petroleum-fueled engines:*

$M_{HC\ mode}$
$=(DHC)CMW_f(DVol)(10^6)/V_m$
$=((DHC/10^6)(W_f)/((DCO/10^6)+(DCO_2/100)+(DHC/10^6)+(\Sigma DX/10^6)))$

$M_{HC\ mode}$
$=(WHC)CMW_f(WVol)(10^6)/V_m$
$=((WHC/10^6)(W_f)/((WCO/10^6)+(WCO_2/100)+(WHC/10^6)+(\Sigma(WX/10^6)))$

(*ii*) *For alcohol-fueled engines:*

$DHC=FID\ HC-\Sigma(r_x)(DX)$
$WHC=FID\ HC-\Sigma(r_x)(WX)$

Where:

FID HC=Concentration of ''hydrocarbon'' plus other organics such as methanol in exhaust as measured by the FID, ppm carbon equivalent.
r_x=FID response to oxygenated species×(methanol, ethanol, or acetaldehyde).
DX=Concentration of oxygenated species×(methanol, ethanol, or acetaldehyde) in exhaust as determined from the dry exhaust sample, ppm carbon (e.g., DCH3OH, 2(DCH3CH2OH)).
WX=Concentration of oxygenated species×(methanol, ethanol, or acetaldehyde) in exhaust as determined from the wet exhaust sample, ppm carbon.

ΣDX=The sum of concentrations DX for all oxygenated species.

ΣWX=The sum of concentrations WX for all oxygenated species.

(*2*) Nonmethane hydrocarbons:

$M_{NMHC\ mode}=(DNMHC)CMW_f(DVol)\ (10^6)/V_m$

$=((DNMHC/10^6)(W_f)/((DCO/10^6)+(DCO_2/100)+(DHC/10^6)))$

$M_{NMHC\ mode}=(WNMHC)CMW_f(WVol)\ (10^6)/V_m$

$=((WNMHC/10^6)(W_f)/((WCO/10^6)+(WCO_2/100)+(WHC/10^6)))$

Where:

DNMHC=FID HC − (r_{CH4})(DCH4)

WNMHC=FID HC − (r_{CH4})(WCH4)

FID HC=Concentration of ''hydrocarbon'' plus other organics such as methane in exhaust as measured by the FID, ppm carbon equivalent.

r_{CH4}=FID response to methane.

DCH4=Concentration of methane in exhaust as determined from the dry exhaust sample, ppm.

WCH4=Concentration of methane in exhaust as determined from the wet exhaust sample, ppm.

(B) Carbon monoxide:

$M_{CO\ mode}=(DCO)MW_{CO}(DVol)/10^6/V_m$

$=((MW_{CO}(DCO/10^6)(W_f)/((CMW_f)(DCO/10^6)+(DCO_2/100)+DHC/10^6)+(\Sigma DX/10^6)))$

$M_{CO\ mode}=(WCO)MW_{CO}(DVol)(10^6)/V_m$

$+((MW_{CO}(WCO/10^6)(W_f)/((CMW_f)(WCO/10^6)+(WCO_2/100)+WHC/10^6)+(\Sigma WX/10^6)))$

(C) Oxides of nitrogen:

$M_{NOx\ mode}=(DNOX)MW_{NO2}(DVol)(10^6)/V_m$

$=((MW_{NO2}(DNOX/10^6)(W_f)/((CMW_f)(DCO/10^6)+(DCO_2/100)+(DHC/10^6)+(\Sigma DX/10^6)))$

$M_{NOx\ mode}=(WNOX)MW_{NO2}(DVol)(10^6)/V_m$

$=((MW_{NO2}(WNOX/10^6)(W_f)/((CMW_f)(WCO/10^6)+(WCO_2/100)+(WHC/10^6)+(\Sigma WX/10^6)))$

(D) Methanol:

$M_{CH3OH\ mode}=(DCH3OH/10^6)32.042(DVol)/V_m$

$M_{CH3OH\ mode}=(WCH3OH/10^6)32.042(WVol)/V_m$

Where:

$DCH3OH=(V_m)(10^6)[(C_1\times AV_1)+(C_2\times AV_2)]/DVol_{MS.}$

$WCH3OH=(V_m)(10^6)[(C_1\times AV_1)+(C_2\times AV_2)]/WVol_{MS.}$

C_i=concentration of methanol in impinger i (1 or 2) in mol/ml.

AV_i=Volume of absorbing reagent in impinger i (1 or 2) in ml.

$DVol_{MS}$=Volume (standard ft^3) of exhaust sample drawn through methanol impingers (dry).

$WVol_{MS}$=Volume (standard ft^3) of exhaust sample drawn through methanol impingers (wet).

(E) Ethanol:

$M_{CH3CH2OH\ mode}=(DCH3CH2OH/10^6)23.035(DVol)/V_m$

$M_{CH3CH2OH\ mode}=(WCH3CH2OH/10^6)23.035(WVol)/V_m$

Where:

$DCH3CH2OH=(V_m)(10^6)[(C_1\times AV_1)+(C_2\times AV_2)]/DVol_{ES.}$

$WCH3CH2OH=(V_m)(10^6)[(C_1\times AV_1)+(C_2\times AV_2)]/WVol_{ES.}$

C_i=concentration of ethanol in impinger i (1 or 2) in mol/ml.

AV_i=Volume of absorbing reagent in impinger i (1 or 2) in ml.

$DVol_{ES}$=Volume (standard ft^3) of exhaust sample drawn through ethanol impingers (dry).

$WVol_{ES}$=Volume (standard ft^3) of exhaust sample drawn through ethanol impingers (wet).

(F) Formaldehyde:

$M_{CH2O\ mode}=(DCH2O/10^6)30.026(DVol)/V_m$

$M_{CH2O\ mode}=(WCH2O/10^6)30.026(WVol)/V_m$

(*1*) If aldehydes are measured using impingers:

$DCH2O=(V_m)(10^6)[(C_1\times AV_1)+(C_2\times AV_2)]/DVol_{FS}$

$WCH2O=(V_m)(10^6)[(C_1\times AV_1)+(C_2\times AV_2)]/WVol_{FS}$

(*2*) If aldehydes are measured using cartridges:

$DCH2O=(V_m)(10^6)(C_R\times AV_R)/DVol_{FS}$

$WCH2O=(V_m)(10^6)(C_R\times AV_R)/WVol_{FS}$

(*3*) The following definitions apply to this paragraph (b)(2)(iii)(F):

AV_i=Volume of absorbing reagent in impinger i (1 or 2) in ml.

AV_R=Volume of absorbing reagent use to rinse the cartridge in ml.

C_i=concentration of formaldehyde in impinger i (1 or 2) in mol/ml.

C_R=concentration of formaldehyde in solvent rinse in mol/ml.

$DVol_{FS}$=Volume (standard ft^3) of exhaust sample drawn through formaldehyde sampling system (dry).

$WVol_{FS}$=Volume (standard ft^3) of exhaust sample drawn through formaldehyde sampling system (wet).

(G) Acetaldehyde:

$M_{CH3CHO\ mode}=(DCH3CHO/10^6)27.027(DVol)/V_m$

$M_{CH3CHO\ mode}=(WCH3CHO/10^6)27.027(WVol)/V_m$

(*1*) If aldehydes are measured using impingers:

$DCH3CHO=(V_m)(10^6)[(C_1 \times AV_1)+(C_2 \times AV_2)]/DVol_{AS}$

$WCH3CHO=(V_m)(10^6)[(C_1 \times AV_1)+C_2 \times AV_2)]/WVol_{AS}$

(*2*) If aldehydes are measured using cartridges:

$DCH3CHO=(V_m)(10^6)(C_R \times AV_R)/DVol_{AS}$

$WCH3CHO=(V_m)(10^6)(C_R \times AV_R)/WVol_{AS}$

(*3*) The following definitions apply to this paragraph (b)(2)(iii)(G):

AV_i=Volume of absorbing reagent in impinger i (1 or 2) in ml.

AV_R=Volume of absorbing reagent use to rinse the cartridge in ml.

C_i=concentration of acetaldehyde in impinger i (1 or 2) in mol/ml.

C_R=concentration of acetaldehyde in solvent rinse in mol/ml.

$DVol_{AS}$=Volume (standard ft^3) of exhaust sample drawn through acetaldehyde sampling system (dry).

$WVol_{AS}$=Volume (standard ft^3) of exhaust sample drawn through acetaldehyde sampling system (wet).

(iv) Conversion of wet concentrations to dry concentrations. Wet concentrations are converted to dry concentrations using the following equation:

$DX=K_W\ WX$

Where:

WX is the concentration of species X on a wet basis.

DX is the concentration of species X on a dry basis.

K_W is a conversion factor=WVol/DVol=1+DH2O.

(A) Iterative calculation of conversion factor. The conversion factor K_W is calculated from the fractional volume of water in the exhaust on a dry basis (DH2O=volume of water in exhaust/dry volume of exhaust). Precise calculation of the conversion factor K_W must be done by iteration, since it requires the dry concentration of HC, but HC emissions are measured wet.

(*1*) The conversion factor is calculated by first assuming DHC=WHC to calculate DVol:

$DVol=(V_m)(W_f)/((CMW_f)(DHC/10^6+DCO/10^6+DCO2/100))$

(*2*) This estimate is then used in the following equations to calculate $DVol_{air}$, then DH2O, then K_W, which allows DHC to be determined more accurately from WHC:

$$DH2O=\left[\frac{\alpha\left(\frac{DCO2}{10^2}+\frac{DCO}{10^6}\right)}{2}+\frac{(Y)(DVol_{air})}{DVol}\right]\left[\frac{1}{1+\frac{DCO}{(DCO2)(K)(10^4)}}\right]$$

Where:

Y=Water volume concentration in intake air, volume fraction (dry).

$DVol_{air}$=Air intake flow rate (ft^3/hr) on a dry basis, measured, or calculated as:

$$DVol_{air}=DVol\left[1-\left(\frac{DCO2}{10^2}\right)\left(\frac{\alpha}{4}\right)-\frac{DCO}{10^6}\left(\frac{\alpha}{4}+0.5\right)\right]$$

(*3*) The calculations are repeated using this estimate of DHC. If the new estimate for K_W is not within one percent of the previous estimate, the iteration is repeated until the difference in K_W between iterations is less than one percent.

(B) Alternate calculation of DH2O (approximation). The following approximation may be used for DH2O instead of the calculation in paragraph (b)(2)(iv)(A) of this section:

$$DH2O = \left[\frac{\alpha\left(\frac{DCO2}{10^2} + \frac{DCO}{10^6}\right)}{2} + (Y)\left(DVol_{Ratio}\right)\right]\left[\frac{1}{1 + \frac{DCO}{(DCO2)(K)(10^4)}}\right]$$

Where:

$$DVol_{ratio} = \frac{DVol_{air}}{DVol} = \left[1 - \left(\frac{DCO2}{10^2}\right)\left(\frac{\alpha}{4}\right) - \frac{DCO}{10^6}\left(\frac{\alpha}{4} + 0.5\right)\right]$$

Y=Water volume concentration in intake air, volume fraction (dry).

(3) *Mass Emissions—Dilute exhaust measurements.* For dilute exhaust measurements mass emissions (grams per hour) of each species for each mode:

(i) *General equations.* The mass emission rate, $M_{x\ mode}$ (g/hr) of each pollutant (HC, NO_X, CO2, CO, CH4 CH3OH, CH3CH2OH, CH2O, CH3CH2O) for each operating mode for bag measurements and diesel continuously heated sampling system measurements is determined from the following equation:

$M_{x\ mode}=(V_{mix})(Density_x)(X_{conc})/(V_f)$

Where:

x designates the pollutant (e.g., HC), V_{mix} is the total diluted exhaust volumetric flow rate (ft^3/hr), $Density_x$ is the specified density of the pollutant in the gas phase (g/ft^3), X_{conc} is the fractional concentration of pollutant x (i.e., ppm/10^6, ppmC/10^6, or %/100), and V_f is the fraction of the raw exhaust that is diluted for analysis.

(ii) The following abbreviations and equations apply to paragraphs (b)(3)(i) through (b)(3)(iii)(J) of this section:

(A) DF=Dilution factor, which is the volumetric ratio of the dilution air to the raw exhaust sample for total dilution, calculated as:

$$DF = \frac{WCO2 - WCO2_d}{WCO2_e - WCO2_d} - 1$$

Where:

WCO2=Carbon dioxide concentration of the raw exhaust sample, in percent (wet).

$WCO2_e$=Carbon dioxide concentration of the dilute exhaust sample, in percent (wet).

$WCO2_d$=Carbon dioxide concentration of the dilution air, in percent (wet).

(B) V_{mix}=Diluted exhaust volumetric flow rate in cubic feet per hour corrected to standard conditions (528°R, and 760 mm Hg).

(C) V_f=Fraction of the total raw exhaust that is diluted for analysis.

$=((CO2_{conc}/10^2)+(CO_{conc}/10^6)+(HC_{conc}/10^6))(V_{mix})(CMW_f)/V_m/M_f$

(iii) Calculation of individual pollutants.

(A) $M_{HC\ mode}$=Hydrocarbon emissions, in grams per hour by mode, are calculated using the following equations:

$M_{HC\ mode}=(V_{mix})(Density_{HC})(HC_{conc}/10^6)/V_f$

$HC_{conc}=HC_e-(HC_d)(1-(1/DF))$

$HC_e=FID\ HC_e-\Xi(r_x)(X_e)$

Where:

$Density_{HC}$=Density of hydrocarbons=16.42 g/ft^3 (0.5800 kg/m_3) for #1 petroleum diesel fuel, 16.27 g/ft^3 (0.5746 kg/m_3) for #2 diesel, and 16.33 g/ft^3 (0.5767 kg/m^3) for other fuels, assuming an average carbon to hydrogen ratio of 1:1.93 for #1 petroleum diesel fuel, 1:1.80 for #2 petroleum diesel fuel, and 1:1.85 for hydrocarbons in other fuels at standard conditions.

HC_{conc}=Hydrocarbon concentration of the dilute exhaust sample corrected for background, in ppm carbon equivalent (i.e., equivalent propane×3).

HC_e=Hydrocarbon concentration of the dilute exhaust bag sample, or for diesel continuous heated sampling systems, average hydrocarbon concentration of the dilute exhaust sample as determined from the integrated HC traces, in ppm carbon equivalent. For petroleum-fueled engines, HC_e is the FID measurement. For methanol-fueled and ethanol-fueled engines:

FID HC_e=Concentration of hydrocarbon plus methanol, ethanol and acetaldehyde in dilute exhaust as measured by the FID, ppm carbon equivalent.

r_x=FID response to oxygenated species x (methanol, ethanol or acetaldehyde).

X_e=Concentration of species x (methanol, ethanol or acetaldehyde) in dilute exhaust as determined from the dilute exhaust sample, ppm carbon.

HC_d=Hydrocarbon concentration of the dilution air as measured, in ppm carbon equivalent.

(B) $M_{NOx\ mode}$ = Oxides of nitrogen emissions, in grams per hour by mode, are calculated using the following equations:

$$M_{NOx\ mode}=(V_{mix})\ (Density_{NO2})\ (NOx_{conc}/10^6)\ /V_f$$

$$NOx_{conc}=(NOx_e-NOx_d(1-(1/DF)))$$

Where:

$Density_{NO2}$=Density of oxides of nitrogen is 54.16 g/ft^3 (1.913 kg/m^3), assuming they are in the form of nitrogen dioxide, at standard conditions.

NOx_{conc}=Oxides of nitrogen concentration of the dilute exhaust sample corrected for background, in ppm.

NOx_e=Oxides of nitrogen concentration of the dilute exhaust bag sample as measured, in ppm.

NOx_d=Oxides of nitrogen concentration of the dilution air as measured, in ppm.

(C) $M_{CO2\ mode}$=Carbon dioxide emissions, in grams per hour by mode, are calculated using the following equations:

$$M_{CO2\ mode}=(V_{mix})\ (Density_{CO2})\ (CO_{2conc}/10^2)\ /V_f$$

$$CO_{2conc}=CO_{2e}-CO_{2d}(1-(1/DF))$$

Where:

Density CO_2=Density of carbon dioxide is 51.81 g/ft^3 (1.830 kg/m^3), at standard conditions.

CO_{2conc}=Carbon dioxide concentration of the dilute exhaust sample corrected for background, in percent.

CO_{2e}=Carbon dioxide concentration of the dilute exhaust bag sample, in percent.

CO_{2d}=Carbon dioxide concentration of the dilution air as measured, in percent.

(D)(*1*) $M_{CO\ mode}$=Carbon monoxide emissions, in grams per hour by mode, are calculated using the following equations:

$$M_{CO\ mode}=(V_{mix})(Density_{CO})(CO_{conc}/10^6)/V_f$$

$$CO_{conc}=CO_e-CO_d(1-(1/DF))$$

$$CO_d=(1-0.000323R)CO_{dm}$$

Where:

$Density_{CO}$=Density of carbon monoxide is 32.97 g/ft^3 (1.164 kg/m^3), at standard conditions.

CO_{conc}=Carbon monoxide concentration of the dilute exhaust sample corrected for background, water vapor, and CO_2 extraction, ppm.

CO_e=Carbon monoxide concentration of the dilute exhaust sample volume corrected for water vapor and carbon dioxide extraction, in ppm.

$CO_e=(1-(0.01+0.005/\alpha)CO_{2e}-0.000323RH)CO_{em}$, where α is the hydrogen to carbon ratio as measured for the fuel used.

CO_{em}=Carbon monoxide concentration of the dilute exhaust sample as measured, in ppm.

RH = Relative humidity of the dilution air, percent.

CO_d=Carbon monoxide concentration of the dilution air corrected for water vapor extraction, in ppm.

CO_{dm}=Carbon monoxide concentration of the dilution air sample as measured, in ppm.

(*2*) If a CO instrument which meets the criteria specified in § 86.1311 of this chapter is used and the conditioning column has been deleted, CO_{em} must be substituted directly for CO_e, and CO_{dm} must be substituted directly for CO_d.

(E) $M_{CH4\ mode}$=Methane emissions corrected for background, in gram per hour by mode, are calculated using the following equations:

$$M_{CH4\ mode}=(V_{mix})\ (Density_{CH4})\ (CH_{4conc}/10^6)\ /V_f$$

$$CH_{4conc}=C_{CH4e}-C_{CH4d}(1-(1/DF))$$

Where:

$Density_{CH4}$=Density of methane is 18.89 g/ft^3 at 68 °F (20 °C) and 760 mm Hg (101.3kPa) pressure.

CH_{4conc}=Methane concentration of the dilute exhaust corrected for background, in ppm.

C_{CH4e}=Methane concentration in the dilute exhaust, in ppm.

C_{CH4d}=Methane concentration in the dilution air, in ppm.

(F) $M_{CH3OH\ mode}$=Methanol emissions corrected for background, in gram per hour by mode, are calculated using the following equations:

$M_{CH3OH\ mode}=(V_{mix})(Density_{CH3OH})(CH_3OH_{conc}/10^6)/V_f$

$CH3OH_{conc}=C_{CH3OHe}-C_{CH3OHd}(1-(1/DF))$

$C_{CH3OHe}=((3.817)(10^{-2})(T_{EM})(((C_{S1})(AV_{S1})+(C_{S2})(AV_{S2})))/((P_B)(V_{EM}))$

$C_{CH3OHd}=((3.817)(10^{-2})(T_{DM})(((C_{D1})(AV_{D1}))+(C_{D2})(AV_{D2})))/((P_B)(V_{DM}))$

Where:

$Density_{CH3OH}$=Density of methanol is 37.71 g/ft³ (1.332 kg/m³), at 68 °F (20 °C) and 760 mm Hg (101.3kPa) pressure.

$CH3OH_{conc}$=Methanol concentration of the dilute exhaust corrected for background, in ppm.

C_{CH3OHe}=Methanol concentration in the dilute exhaust, in ppm.

C^{CH3OHd}=Methanol concentration in the dilution air, in ppm.

T_{EM}=Temperature of methanol sample withdrawn from dilute exhaust, °R.

T_{DM}=Temperature of methanol sample withdrawn from dilution air, °R.

P_B=Barometric pressure during test, mm Hg.

V_{EM}=Volume of methanol sample withdrawn from dilute exhaust, ft³.

V_{DM}=Volume of methanol sample withdrawn from dilution air, ft³.

C_S=GC concentration of aqueous sample drawn from dilute exhaust, µg/ml.

C_D=GC concentration of aqueous sample drawn from dilution air, µg/ml.

A_{VS}=Volume of absorbing reagent (deionized water) in impinger through which methanol sample from dilute exhaust is drawn, ml.

A_{VD}=Volume of absorbing reagent (deionized water) in impinger through which methanol sample from dilution air is drawn, ml.

$_1$=first impinger.

$_2$=second impinger.

(G) $M_{C2H5OH\ mode}$=Ethanol emissions corrected for background, in gram per hour by mode, are calculated using the following equations:

$M_{CH3CH2OH\ mode}=(V_{mix})(Density_{CH3CH2OH})((CH_3CH_2OH_{conc}/10^6))/V_f$

$CH_3CH_2OH_{conc}=C_{CH3CH2OHe}-C_{CH3CH2OHd}(1-(1/DF))$

$C_{CH3CH2OHd}=((2.654)(10^{-2})(T_{DM})(((C_{D1})(AV_{D1}))+(C_{D2})(AV_{D2})))/((P_B)(V_{DM}))$

$C_{CH3CH2OHe}=((2.654)(10^{-2})(T_{EM})(((C_{S1})(AV_{S1}))+(C_{S2})(AV_{S2})))/((P_B)(V_{EM}))$

Where:

$Density_{C2H5OH}$=Density of ethanol is 54.23 g/ft³ (1.915 kg/m³), at 68 °F (20 °C) and 760 mm Hg (101.3kPa) pressure.

$CH_3CH_2OH_{conc}$=Ethanol concentration of the dilute exhaust corrected for background, in ppm.

$C_{CH3CH2OHe}$=Ethanol concentration in the dilute exhaust, in ppm.

$C_{CH3CH2OHd}$=Ethanol concentration in the dilution air, in ppm.

T_{EM}= Temperature of ethanol sample withdrawn from dilute exhaust, °R.

T_{DM}=Temperature of ethanol sample withdrawn from dilution air, °R.

P_B=Barometric pressure during test, mm Hg.

V_{EM}=Volume of ethanol sample withdrawn from dilute exhaust, ft³.

V_{DM}=Volume of ethanol sample withdrawn from dilution air, ft³.

C_S=GC concentration of aqueous sample drawn from dilute exhaust, µg/ml.

C_D=GC concentration of aqueous sample drawn from dilution air, µg/ml.

A_{VS}= Volume of absorbing reagent (deionized water) in impinger through which ethanol sample from dilute exhaust is drawn, ml.

A_{VD}=Volume of absorbing reagent (deionized water) in impinger through which ethanol sample from dilution air is drawn, ml.

$_1$=first impinger.

$_2$=second impinger.

(H) $M_{CH2O\ mode}$=Formaldehyde emissions corrected for background, in gram per hour by mode, are calculated using the following equations:

$M_{CH2O\ mode}=(V_{mix})(Density_{CH2O})((CH_2O_{conc}/10^6)/V_f$

$CH2O_{conc}=C_{CH2Oe}-C_{CH2Od}(1-(1/DF))$

$C_{CH2Oe}=((4.069)(10^{-2})(C_{FDE})(V_{AE})(Q)(T_{EF}))/((V_{SE})(P_B)$

$C_{CH2Od}=((4.069)(10^{-2})(C_{FDA})(V_{AA})(Q)(T_{DF}))/(V_{SA})(P_B)$

Where:

$Density_{CH2O}$=Density of formaldehyde is 35.36 g/ft³ (1.249 kg/m³), at 68 °F (20 °C) and 760 mmHg (101.3 kPa) pressure.

$CH2O_{conc}$=Formaldehyde concentration of the dilute exhaust corrected for background, ppm.

C_{CH2Oe}=Formaldehyde concentration in dilute exhaust, ppm.

C_{CH2Od}=Formaldehyde concentration in dilution air, ppm.

C_{FDE}=Concentration of DNPH derivative of formaldehyde from dilute exhaust sample in sampling solution, µg/ml.

V_{AE}=Volume of sampling solution for dilute exhaust formaldehyde sample, ml.

Q = Ratio of molecular weights of formaldehyde to its DNPH derivative = 0.1429.

T_{EF}=Temperature of formaldehyde sample withdrawn from dilute exhaust, °R.

V_{SE}=Volume of formaldehyde sample withdrawn from dilute exhaust, ft³.

P_B=Barometric pressure during test, mm Hg.

C_{FDA}=Concentration of DNPH derivative of formaldehyde from dilution air sample in sampling solution, μg/ml.

V_{AA}=Volume of sampling solution for dilution air formaldehyde sample, ml.

T_{DF}=Temperature of formaldehyde sample withdrawn from dilution air, °R.

V_{SA}=Volume of formaldehyde sample withdrawn from dilution air, ft^3.

(I) $M_{CH3CHO\ mode}$=Acetaldehyde emissions corrected for background, in grams per hour by mode, are calculated using the following equations:

$$M_{CH3CHO\ mode}=(V_{mix})(Density_{CH3CHO})((CH_3CHO_{conc}/10^6)/V_f$$

$$CH3CHO_{conc}=C_{CH3CHOe}-C_{CH3CHOd}(1—(1/DF))$$

$$C_{CH3CHOe}=((2.774)(10^{-2})(C_{ADE})(V_{AE})(Q)(T_{EF}))/((V_{SE})(P_B)$$

$$C_{CH3CHOd}=((2.774)(10^{-2})(C_{ADA})(V_{AA})(Q)(T_{DF}))/(V_{SA})(P_B)$$

Where:

$Density_{CH3CHO}$=Density of acetaldehyde is 51.88 g/ft^3 (1.833 kg/m^3), at 68 °F (20 °C) and 760 mmHg (101.3 kPa) pressure.

$CH3CHO_{conc}$=Acetaldehyde concentration of the dilute exhaust corrected for background, ppm.

$C_{CH3CHOe}$=Acetaldehyde concentration in dilute exhaust, ppm.

$C_{CH3CHOd}$=Acetaldehyde concentration in dilution air, ppm.

C_{ADE}=Concentration of DNPH derivative of acetaldehyde from dilute exhaust sample in sampling solution, μg/ml.

V_{AE}=Volume of sampling solution for dilute exhaust acetaldehyde sample, ml.

Q=Ratio of molecular weights of acetaldehyde to its DNPH derivative =0.182

T_{EF}=Temperature of acetaldehyde sample withdrawn from dilute exhaust, °R.

V_{SE}=Volume of acetaldehyde sample withdrawn from dilute exhaust, ft^3.

P_B=Barometric pressure during test, mm Hg.

C_{ADA}Concentration of DNPH derivative of acetaldehyde from dilution air sample in sampling solution, μg/ml.

V_{AA}=Volume of sampling solution for dilution air acetaldehyde sample, ml.

T_{DF}=Temperature of acetaldehyde sample withdrawn from dilution air, °R.

V_{SA}=Volume of acetaldehyde sample withdrawn from dilution air, ft^3.

(J) $M_{NMHC\ mode}$=Nonmethane hydrocarbon emissions, in grams per hour by mode.

$$M_{NMHC\ mode}=(V_{mix})(Density_{NMHC})((NMHCE_{conc}/10^6))/V_f$$

$$NMHC_{conc}=NMHC_e—(NMHC_d)(1-(1/DF))$$

$$NMHC_e=FID\ HC_e-(r_m)(C_{CH4e})$$

$$NMHC_d=FID\ HC_d-(r_m)(C_{CH4d})$$

Where:

$Density_{NMHC}$=Density of nonmethane hydrocarbons=16.42 g/ft^3 (0.5800 kg/m^3) for # 1 petroleum diesel fuel, 16.27 g/ft^3 (0.5746 kg/m^3) for #2 diesel, and 16.33 for other fuels, assuming an average carbon to hydrogen ratio of 1:1.93 for #1 petroleum diesel fuel, 1:1.80 for #2 petroleum diesel fuel, and 1:1.85 for nonmethane hydrocarbons in other fuels at standard conditions.

$NMHC_{conc}$=Nonmethane hydrocarbon concentration of the dilute exhaust sample corrected for background, in ppm carbon equivalent (i.e., equivalent propane × 3).

$NMHC_e$=Nonmethane hydrocarbon concentration of the dilute exhaust bag sample:

$FID\ HC_e$=Concentration of hydrocarbons in dilute exhaust as measured by the FID, ppm carbon equivalent.

rm=FID response to methane.

C_{CH4e}=Concentration of methane in dilute exhaust as determined from the dilute exhaust sample.

$NMHC_d$=Nonmethane hydrocarbon concentration of the dilution air:

$FID\ HC_d$=Concentration of hydrocarbons in dilute exhaust as measured by the FID, ppm carbon equivalent.

r_m=FID response to methane.

C_{CH4d}=Concentration of methane in dilute exhaust as determined from the dilute exhaust sample, ppm.

(4) *Particulate exhaust emissions.* The mass of particulate for a test mode determined from the following equations when a heat exchanger is used (i.e., no flow compensation), and when background filters are used to correct for background particulate levels:

$M_{PM\ mode}$=Particulate emissions, grams per hour by mode.

$$M_{PM\ mode}=(WVol)(PM_{conc})(1+DF)=(V_{mix})(PM_{conc})/V_f$$

$$PM_{conc}=PM_e-PM_d(1-(1/DF))$$

$$PM_e=M_{PMe}/V_{sampe}/10^3$$

$$PM_d=M_{PMd}/V_{sampd}/10^3$$

Where:

PM_{conc}=Particulate concentration of the diluted exhaust sample corrected for background, in g/ft^3

M_{PMe}=Measured mass of particulate for the exhaust sample, in mg, which is the difference in filter mass before and after the test.

M_{PMd}=Measured mass of particulate for the dilution air sample, in mg, which is the difference in filter mass before and after the test.

V_{sampe}=Total wet volume of sample removed from the dilution tunnel for the exhaust particulate measurement, cubic feet at standard conditions.

V_{sampd}=Total wet volume of sample removed from the dilution tunnel for the dilution air particulate measurement, cubic feet at standard conditions.

DF=Dilution factor, which is the volumetric ratio of the dilution air to the raw exhaust sample, calculated as:

$$DF = \frac{WCO2 - WCO2_d}{WCO2_e - WCO2_d} - 1$$

(c) *Humidity calculations.* (1) The following abbreviations (and units) apply to paragraph (b) of this section:

BARO=barometric pressure (Pa).

H=specific humidity, (g H_2O/g of dry air).

K_H=conversion factor=0.6220 g H_2O/g dry air.

M_{air}=Molecular weight of air=28.9645.

M_{H2O}=Molecular weight of water=18.01534.

P_{DB}=Saturation vapor pressure of water at the dry bulb temperature (Pa).

P_{DP}=Saturation vapor pressure of water at the dewpoint temperature (Pa).

P_v=Partial pressure of water vapor (Pa).

P_{WB}=Saturation vapor pressure of water at the wet bulb temperature (Pa).

T_{DB}=Dry bulb temperature (Kelvin).

T_{WB}=Wet bulb temperature (Kelvin).

Y=Water-vapor volume concentration.

(2) The specific humidity on a dry basis of the intake air (H) is defined as:

$$H=((K_H)\ (P_v)/(BARO - P_v))$$

(3) The partial pressure of water vapor may be determined using a dew point device. In that case:

$$P_v=P_{DP}$$

(4) The percent of relative humidity (RH) is defined as:

$$RH=(P_v/P_{DB})100$$

(5) The water-vapor volume concentration on a dry basis of the engine intake air (Y) is defined as:

$$Y=((H)(M_{air})/(M_{H2O})=P_v/(BARO - P_v)$$

(d) *NO_X correction factor.* (1) NO_X emission rates ($M_{NOx\ mode}$) shall be adjusted to account for the effects of humidity and temperature by multiplying each emission rate by K_{NOx}, which is calculated from the following equations:

$$K_{NOx}=(K)(1+(0.25(\log K)^2)^{1/2})$$

$$K=(K_H)(K_T)$$

$$K_H=[C_1+C_2(\exp((-0.0143)(10.714))]/[C_1+C_2(\exp((-0.0143)(1000H))]$$

$$C_1=-8.7+164.5\exp(-0.0218(A/F)_{wet})$$

$$C_2=130.7+3941\exp(-0.0248(A/F)_{wet})$$

Where:

$(A/F)_{wet}$=Mass of moist air intake divided by mass of fuel intake.

$K_T=1/[1–0.017(T_{30}-T_A)]$ for tests conducted at ambient temperatures below 30 °C.

K_T=1.00 for tests conducted at ambient temperatures at or above 30 °C.

T_{30}=The measured intake manifold air temperature in the locomotive when operated at 30 °C (or 100 °C, where intake manifold air temperature is not available).

T_A=The measured intake manifold air temperature in the locomotive as tested (or the ambient temperature (°C), where intake manifold air temperature is not available).

(e) *Other calculations.* Calculations other than those specified in this section may be used with the advance approval of the Administrator.

§ 92.133 Required information.

(a) The required test data shall be grouped into the following two general categories:

(1) *Pre-test data.* These data are general test data that must be recorded for each test. The data are of a more descriptive nature such as identification of the test engine, test site number, etc. As such, these data can be recorded at any time within 24 hours of the test.

(2) *Test data.* These data are physical test data that must be recorded at the time of testing.

(b) When requested, data shall be supplied in the format specified by the Administrator.

(c) *Pre-test data.* The following shall be recorded, and reported to the Administrator for each test conducted for compliance with the provisions of this part:

(1) Engine family identification (including subfamily identification, such as for aftertreatment systems).

(2) Locomotive and engine identification, including model, manufacturer and/or remanufacturer, and identification number.

(3) Locomotive and engine parameters, including fuel type, recommended oil type, exhaust configuration and sizes, base injection (ignition) timing, operating temperature, advance/retard injection (ignition) timing controls, recommended start-up and warm-up procedures, alternator generator efficiency curve.

(4) Locomotive or engine and instrument operator(s).

(5) Number of hours of operation accumulated on the locomotive or engine prior to beginning the testing.

(6) Dates of most recent calibrations required by §§ 92.115–92.122.

(7) All pertinent instrument information such as tuning (as applicable), gain, serial numbers, detector number, calibration curve number, etc. As long as this information is traceable, it may be summarized by system or analyzer identification numbers.

(8) A description of the exhaust duct and sample probes, including dimensions and locations.

(d) Test data. The physical parameters necessary to compute the test results and ensure accuracy of the results shall be recorded for each test conducted for compliance with the provisions of this part. Additional test data may be recorded at the discretion of the manufacturer or remanufacturer. Extreme details of the test measurements such as analyzer chart deflections will generally not be required on a routine basis to be reported to the Administrator for each test, unless a dispute about the accuracy of the data arises. The following types of data shall be required to be reported to the Administrator. The applicable Application Format for Certification will specify the exact requirements which may change slightly from year to year with the addition or deletion of certain items.

(1) Date and time of day.

(2) Test number.

(3) Engine intake air and test cell (or ambient, as applicable) temperature.

(4) For each test point, the temperature of air entering the engine after compression and cooling in the charge air cooler(s). If testing is not performed on a locomotive, the corresponding temperatures when the engine is in operation in a locomotive at ambient conditions represented by the test.

(5) Barometric pressure. (A central laboratory barometer may be used: Provided, that individual test cell barometric pressures are shown to be within ±0.1 percent of the barometric pressure at the central barometer location.)

(6) Engine intake and test cell dilution air humidity.

(7) Measured horsepower and engine speed for each test mode.

(8) Identification and specifications of test fuel used.

(9) Measured fuel consumption rate at maximum power.

(10) Temperature set point of the heated continuous analysis system components (if applicable).

(11) All measured flow rates, dilution factor, and fraction of exhaust diluted for diluted exhaust measurements (as applicable) for each test mode.

(12) Temperature of the dilute exhaust mixture at the inlet to the respective gas meter(s) or flow instrumentation used for particulate sampling.

(13) The maximum temperature of the dilute exhaust mixture immediately ahead of the particulate filter.

(14) Sample concentrations (background corrected as applicable) for HC, CO, CO_2, and NO_X (and methane, NMHC, alcohols and aldehydes, as applicable) for each test mode. This includes the continuous trace and the steady-state value (or integrated value where required).

(15) The stabilized pre-test weight and post-test weight of each particulate sample and back-up filter or pair of filters.

(16) Brake specific emissions (g/BHP-hr) for HC, CO, NO_X, particulate and, if applicable, CH3, NMHC, THCE, CH_3OH, CH3CH2OH, CH2O and CH3CHO for each test mode.

(17) The weighted brake specific emissions for HC, CO, NO_X and particulate (g/BHP-hr) for the total test for the duty-cycle(s) applicable to the locomotive.

(18) The smoke opacity for each test mode. This includes the continuous

trace, the peak values and the steady-state value.

EFFECTIVE DATE NOTE: At 63 FR 19044, Apr. 16, 1998, § 92.133 was added. This section contains information collection and recordkeeping requirements and will not become effective until approval has been given by the Office of Management and Budget.

Subpart C—Certification Provisions

§ 92.201 Applicability.

The requirements of this subpart are applicable to manufacturers and remanufacturers of any locomotives and locomotive engines subject to the provisions of subpart A of this part.

§ 92.202 Definitions.

The definitions of subpart A of this part apply to this subpart.

§ 92.203 Application for certification.

(a) For each engine family that complies with all applicable standards and requirements, the manufacturer or remanufacturer must submit to the Administrator a completed application for a certificate of conformity.

(b) The application must be approved and signed by the authorized representative of the manufacturer or remanufacturer.

(c) The application will be updated and corrected by amendment as provided for in § 92.210 to accurately reflect the manufacturer's or remanufacturer's production.

(d) *Required content.* Each application must include the following information:

(1)(i) A description of the basic engine design including, but not limited to, the engine family specifications, the provisions of which are contained in § 92.208;

(ii)(A) For freshly manufactured locomotives, a description of the basic locomotive design;

(B) For freshly manufactured engines for use in remanufactured locomotives, a description of the locomotive designs in which the engines are to be used;

(C) For remanufactured locomotives, a description of the basic locomotive designs to which the remanufacture system will be applied;

(iii) A list of distinguishable configurations to be included in the engine family;

(2) An explanation of how the emission control system operates, including detailed descriptions of:

(i) All emission control system components;

(ii) Injection or ignition timing for each notch (i.e., degrees before or after top-dead-center), and any functional dependence of such timing on other operational parameters (e.g., engine coolant temperature);

(iii) Each auxiliary emission control device (AECD); and

(iv) All fuel system components to be installed on any production or test locomotive(s) or engine(s);

(3) A description of the test locomotive or engine;

(4) Special or alternate test procedures, if applicable;

(5) A description of the operating cycle and the period of operation necessary to accumulate service hours on the test locomotive or engine and stabilize emission levels;

(6) A description of all adjustable operating parameters (including, but not limited to, injection timing and fuel rate), including the following:

(i) The nominal or recommended setting and the associated production tolerances;

(ii) The intended adjustable range, and the physically adjustable range;

(iii) The limits or stops used to limit adjustable ranges;

(iv) Production tolerances of the limits or stops used to establish each physically adjustable range; and

(v) Information relating to why the physical limits or stops used to establish the physically adjustable range of each parameter, or any other means used to inhibit adjustment, are the most effective means possible of preventing adjustment of parameters to settings outside the manufacturer's or remanufacturer's specified adjustable ranges on in-use engines;

(7) For families participating in the averaging, banking, and trading program, the information specified in subpart D of this part;

(8) Projected U.S. production information for each configuration;

(9) A description of the test equipment and fuel proposed to be used;

(10) All test data obtained by the manufacturer or remanufacturer on each test engine or locomotive;

(11) The intended useful life period for the engine family, in accordance with § 92.9(a);

(12) The intended deterioration factors for the engine family, in accordance with § 92.9(b)(2);

(13) An unconditional statement certifying that all locomotives and engines included the engine family comply with all requirements of this part and the Clean Air Act.

(e) At the Administrator's request, the manufacturer or remanufacturer must supply such additional information as may be required to evaluate the application.

(f)(1) If the manufacturer or remanufacturer, submits some or all of the information specified in paragraph (d) of this section in advance of its full application for certification, the Administrator shall review the information and make the determinations required in § 92.208(d) within 90 days of the manufacturer's or remanufacturer's submittal.

(2) The 90-day decision period is exclusive of any elapsed time during which EPA is waiting for additional information requested from a manufacturer or remanufacturer regarding an adjustable parameter (the 90-day period resumes upon receipt of the manufacturer's or remanufacturer's response). For example, if EPA requests additional information 30 days after the manufacturer or remanufacturer submits information under paragraph (f)(1) of this section, then the Administrator would make a determination within 60 days of the receipt of the requested information from the manufacturer or remanufacturer.

(g)(1) The Administrator may modify the information submission requirements of paragraph (d) of this section, provided that all of the information specified therein is maintained by the manufacturer or remanufacturer as required by § 92.215, and amended, updated, or corrected as necessary.

(2) For the purposes of this paragraph (g), § 92.215 includes all information specified in paragraph (d) of this section whether or not such information is actually submitted to the Administrator for any particular model year.

(3) The Administrator may review a manufacturer's or remanufacturer's records at any time. At the Administrator's discretion, this review may take place either at the manufacturer's or remanufacturer's facility or at another facility designated by the Administrator.

§ 92.204 Designation of engine families.

This section specifies the procedure and requirements for grouping of engines into engine families.

(a) Manufacturers and remanufacturers shall divide their locomotives and locomotive engines into groupings of locomotives and locomotive engines which are expected to have similar emission characteristics throughout their useful life. Each group shall be defined as a separate engine family.

(b) For Tier 1 and Tier 2 locomotives and locomotive engines, the following characteristics distinguish engine families:

(1) The combustion cycle (e.g., diesel cycle);

(2) The type of engine cooling employed (air-cooled or water-cooled), and procedure(s) employed to maintain engine temperature within desired limits (thermostat, on-off radiator fan(s), radiator shutters, etc.);

(3) The bore and stroke dimensions;

(4) The approximate intake and exhaust event timing and duration (valve or port);

(5) The location of the intake and exhaust valves (or ports);

(6) The size of the intake and exhaust valves (or ports);

(7) The overall injection, or as appropriate ignition, timing characteristics (i.e., the deviation of the timing curves from the optimal fuel economy timing curve must be similar in degree);

(8) The combustion chamber configuration and the surface-to-volume ratio of the combustion chamber when the piston is at top dead center position, using nominal combustion chamber dimensions;

(9) The location of the piston rings on the piston;

(10) The method of air aspiration (turbocharged, supercharged, naturally aspirated, Roots blown);

(11) The turbocharger or supercharger general performance characteristics (e.g., approximate boost pressure, approximate response time, approximate size relative to engine displacement);

(12) The type of air inlet cooler (air-to-air, air-to-liquid, approximate degree to which inlet air is cooled);

(13) The intake manifold induction port size and configuration;

(14) The type of fuel and fuel system configuration;

(15) The configuration of the fuel injectors and approximate injection pressure;

(16) The type of fuel injection system controls (i.e., mechanical or electronic);

(17) The type of smoke control system;

(18) The exhaust manifold port size and configuration; and

(19) The type of exhaust aftertreatment system (oxidation catalyst, particulate trap), and characteristics of the aftertreatment system (catalyst loading, converter size vs engine size).

(c) For Tier 0 locomotives and locomotive engines, the following characteristics distinguish engine families:

(1) The combustion cycle (e.g., diesel cycle);

(2) The type of engine cooling employed (air-cooled or water-cooled), and procedure(s) employed to maintain engine temperature within desired limits (thermostat, on-off radiator fan(s), radiator shutters, etc.);

(3) The approximate bore and stroke dimensions;

(4) The approximate location of the intake and exhaust valves (or ports);

(5) The combustion chamber general configuration and the approximate surface-to-volume ratio of the combustion chamber when the piston is at top dead center position, using nominal combustion chamber dimensions;

(6) The method of air aspiration (turbocharged, supercharged, naturally aspirated, Roots blown);

(7) The type of air inlet cooler (air-to-air, air-to-liquid, approximate degree to which inlet air is cooled);

(8) The type of fuel and general fuel system configuration;

(9) The general configuration of the fuel injectors and approximate injection pressure; and

(10) The fuel injection system control type (electronic or mechanical).

(d) Upon request by the manufacturer or remanufacturer, locomotives or locomotive engines that are eligible to be included in the same engine family based on the criteria in paragraph (b) or (c) of this section may be divided into different engine families. This request must be accompanied by information the manufacturer or remanufacturer believes supports the addition of these different engine families. For the purposes of determining whether an engine family is a small engine family in § 92.603(a)(2), EPA will consider the number of locomotives or locomotive engines that could have been classed together under paragraph (b) or (c) of this section, instead of the number of locomotives or locomotive engines that are included in a subdivision allowed by this paragraph (d).

(e) Upon request by the manufacturer or remanufacturer, the Administrator may allow locomotives or locomotive engines that would be required to be grouped into separate engine families based on the criteria in paragraph (b) or (c) of this section to be grouped into a single engine family if the manufacturer or remanufacturer demonstrates that similar emission characteristics will occur. This request must be accompanied by emission information supporting the appropriateness of such combined engine families.

§ 92.205 Prohibited controls, adjustable parameters.

(a) Any system installed on, or incorporated in, a new locomotive or new locomotive engine to enable such locomotive or locomotive engine to conform to standards contained in this subpart:

(1) Shall not in its operation or function cause significant (as determined by the Administrator) emission into the ambient air of any noxious or toxic substance that would not be emitted in the operation of such locomotive, or locomotive engine, without such system,

except as specifically permitted by regulation;

(2) Shall not in its operation, function or malfunction result in any unsafe condition endangering the locomotive, its operators, riders or property on a train, or persons or property in close proximity to the locomotive; and

(3) Shall function during all in-use operation except as otherwise allowed by this part.

(b) In specifying the adjustable range of each adjustable parameter on a new locomotive or new locomotive engine, the manufacturer or remanufacturer, shall:

(1) Ensure that safe locomotive operating characteristics are available within that range, as required by section 202(a)(4) of the Clean Air Act, taking into consideration the production tolerances; and

(2) To the maximum extent practicable, limit the physical range of adjustability to that which is necessary for proper operation of the locomotive or locomotive engine.

§ 92.206 Required information.

(a) The manufacturer or remanufacturer shall perform the tests required by the applicable test procedures, and submit to the Administrator the information required by this section: Provided, however, that if requested by the manufacturer or remanufacturer, the Administrator may waive any requirement of this section for testing of locomotives, or locomotive engines, for which the required emission data are otherwise available.

(b) Exhaust emission deterioration factors, with supporting data. The determination of the deterioration factors shall be conducted in accordance with good engineering practice to assure that the locomotives or locomotive engines covered by a certificate issued under § 92.208 will meet the emission standards in § 92.8, in actual use for the useful life of the locomotive or locomotive engine.

(c) Emission data, including exhaust methane data in the case of locomotives or locomotive engines subject to a non-methane hydrocarbon standard, on such locomotives or locomotive engines tested in accordance with applicable test procedures of subpart B of this part. These data shall include zero hour data, if generated. In lieu of providing the emission data required by paragraph (a) of this section, the Administrator may, upon request of the manufacturer or remanufacturer, allow the manufacturer or remanufacturer to demonstrate (on the basis of previous emission tests, development tests, or other testing information) that the engine or locomotive will conform with the applicable emission standards of § 92.8.

(d) A statement that the locomotives and locomotive engines, for which certification is requested conform to the requirements in § 92.7, and that the descriptions of tests performed to ascertain compliance with the general standards in § 92.7, and the data derived from such tests, are available to the Administrator upon request.

(e) A statement that the locomotive, or locomotive engine, with respect to which data are submitted to demonstrate compliance with the applicable standards of this subpart, is in all material respects as described in the manufacturer's or remanufacturer's application for certification; that it has been tested in accordance with the applicable test procedures utilizing the fuels and equipment described in the application for certification; and that on the basis of such tests, the engine family conforms to the requirements of this part. If, on the basis of the data supplied and any additional data as required by the Administrator, the Administrator determines that the test locomotive, or test engine, was not as described in the application for certification or was not tested in accordance with the applicable test procedures utilizing the fuels and equipment as described in the application for certification, the Administrator may make the determination that the locomotive, or engine, does not meet the applicable standards. If the Administrator makes such a determination, he/she may withhold, suspend, or revoke the certificate of conformity under § 92.208(c)(3)(i).

§ 92.207 Special test procedures.

(a) *Establishment of special test procedures by EPA.* The Administrator may, on the basis of written application by a

manufacturer or remanufacturer, establish special test procedures other than those set forth in this part, for any locomotive or locomotive engine that the Administrator determines is not susceptible to satisfactory testing under the specified test procedures set forth in subpart B of this part.

(b) *Use of alternate test procedures by manufacturer or remanufacturer.* (1) A manufacturer or remanufacturer may elect to use an alternate test procedure provided that it is equivalent to the specified procedures with respect to the demonstration of compliance, its use is approved in advance by the Administrator, and the basis for the equivalence with the specified test procedures is fully described in the manufacturer's or remanufacturer's application.

(2) The Administrator may reject data generated under alternate test procedures which do not correlate with data generated under the specified procedures.

§ 92.208 Certification.

(a) Paragraph (a) of this section applies to manufacturers of new locomotives and new locomotive engines. If, after a review of the application for certification, test reports and data acquired from a freshly manufactured locomotive or locomotive engine or from a development data engine, and any other information required or obtained by EPA, the Administrator determines that the application is complete and that the engine family meets the requirements of the Act and this part, he/she will issue a certificate of conformity with respect to such engine family except as provided by paragraph (c)(3) of this section. The certificate of conformity is valid for each engine family from the date of issuance by EPA until 31 December of the model year or calendar year in which it is issued and upon such terms and conditions as the Administrator deems necessary or appropriate to assure that the production locomotives or engines covered by the certificate will meet the requirements of the Act and of this part.

(b) This paragraph (b) applies to remanufacturers of locomotives and locomotive engines. If, after a review of the application for certification, test reports and data acquired from a remanufactured locomotive or locomotive engine or from a development data engine, and any other information required or obtained by EPA, the Administrator determines that the engine family meets the requirements of the Act and of this subpart, he/she will issue a certificate of conformity with respect to such engine family except as provided by paragraph (c)(3) of this section. The certificate of conformity is valid for each engine family from the date of issuance by EPA until 31 December of the model year or calendar year in which it is issued and upon such terms and conditions as the Administrator deems necessary or appropriate to assure that the production locomotives or engines covered by the certificate will meet the requirements of the Act and of this part.

(c) This paragraph (c) applies to manufacturers and remanufacturers of locomotives and locomotive engines.

(1) The manufacturer or remanufacturer shall bear the burden of establishing to the satisfaction of the Administrator that the conditions upon which the certificates were issued were satisfied or excused.

(2) The Administrator will determine whether the test data included in the application represents all locomotives or locomotive engines of the engine family.

(3) Notwithstanding the fact that any locomotive(s) or locomotive engine(s) may comply with other provisions of this subpart, the Administrator may withhold or deny the issuance of any certificate of conformity, or suspend or revoke any such certificate(s) which has (have) been issued with respect to any such locomotive(s) or locomotive engine(s) if:

(i) The manufacturer or remanufacturer submits false or incomplete information in its application for certification thereof;

(ii) The manufacturer or remanufacturer renders inaccurate any test data which it submits pertaining thereto or otherwise circumvents the intent of the Act, or of this part with respect to such locomotive or locomotive engine;

(iii) Any EPA Enforcement Officer is denied access on the terms specified in

§ 92.215 to any facility or portion thereof which contains any of the following:

(A) A locomotive or locomotive engine which is scheduled to undergo emissions testing, or which is undergoing emissions testing, or which has undergone emissions testing; or

(B) Any components used or considered for use in the construction, modification or buildup of any locomotive or locomotive engine which is scheduled to undergo emissions testing, or which is undergoing emissions testing, or which has undergone emissions testing for purposes of emissions certification; or

(C) Any production locomotive or production locomotive engine which is or will be claimed by the manufacturer or remanufacturer to be covered by the certificate; or

(D) Any step in the construction of a locomotive or locomotive engine, where such step may reasonably be expected to have an effect on emissions; or

(E) Any records, documents, reports or histories required by this part to be kept concerning any of the items listed in paragraphs (c)(3)(iii)(A) through (D).

(iv) Any EPA Enforcement Officer is denied ''reasonable assistance'' (as defined in § 92.215).

(4) In any case in which a manufacturer or remanufacturer knowingly submits false or inaccurate information or knowingly renders inaccurate or invalid any test data or commits any other fraudulent acts and such acts contribute substantially to the Administrator's decision to issue a certificate of conformity, the Administrator may deem such certificate void *ab initio*.

(5) In any case in which certification of a locomotive or locomotive engine is to be withheld, denied, revoked or suspended under paragraph (c)(3) of this section, and in which the Administrator has presented to the manufacturer or remanufacturer involved reasonable evidence that a violation of § 92.215 in fact occurred, the manufacturer or remanufacturer, if it wishes to contend that, even though the violation occurred, the locomotive or locomotive engine in question was not involved in the violation to a degree that would warrant withholding, denial, revocation or suspension of certification under paragraph (c)(3) of this section, shall have the burden of establishing that contention to the satisfaction of the Administrator.

(6) Any revocation, suspension, or voiding of certification under paragraph (c)(3) of this section shall:

(i) Be made only after the manufacturer or remanufacturer concerned has been offered an opportunity for a hearing conducted in accordance with § 92.216; and

(ii) Extend no further than to forbid the introduction into commerce of locomotives or locomotive engines previously covered by the certification which are still in the hands of the manufacturer or remanufacturer, except in cases of such fraud or other misconduct that makes the certification invalid *ab initio*.

(7) The manufacturer or remanufacturer may request, within 30 days of receiving notification, that any determination made by the Administrator under paragraph (c)(3) of this section to withhold or deny certification be reviewed in a hearing conducted in accordance with § 92.216. The request shall be in writing, signed by an authorized representative of the manufacturer or remanufacturer as applicable, and shall include a statement specifying the manufacturer's or remanufacturer's objections to the Administrator's determinations, and data in support of such objections. If the Administrator finds, after a review of the request and supporting data, that the request raises a substantial factual issue, he/she will grant the request with respect to such issue.

(d) In approving an application for certification, the Administrator may specify:

(1) A broader range of adjustability than recommended by the manufacturer or remanufacturer for those locomotive or engine parameters which are to be subject to adjustment, if the Administrator determines that it will not be practical to keep the parameter adjusted within the recommended range in use;

(2) A longer useful life period, if the Administrator determines that the useful life of the locomotives and locomotive engines in the engine family, as

defined in § 92.2, is longer than the period specified by the manufacturer or remanufacturer; and/or

(3) Larger deterioration factors, if the Administrator determines that the deterioration factors specified by the manufacturer or remanufacturer do not meet the requirements of § 92.9(b)(2)(iv).

(e) Within 30 days following receipt of notification of the Administrator's determinations made under paragraph (d) of this section, the manufacturer or remanufacturer may request a hearing on the Administrator's determinations. The request shall be in writing, signed by an authorized representative of the manufacturer or remanufacturer as applicable, and shall include a statement specifying the manufacturer's or remanufacturer's objections to the Administrator's determinations, and data in support of such objections. If, after review of the request and supporting data, the Administrator finds that the request raises a substantial factual issue, the manufacturer or remanufacturer shall be provided with a hearing in accordance with § 92.216 with respect to such issue.

§ 92.209 Certification with multiple manufacturers or remanufacturers.

(a) Where there are multiple persons meeting the definition of manufacturer or remanufacturer, each such person must comply with the requirements of this part that apply to manufacturers or remanufacturers. However, if one person complies with a requirement, then all such persons will be deemed to have complied with that specific requirement.

(b) Where more than one entity meets the definition of manufacturer or remanufacturer for a particular locomotive or locomotive engine, and any one of the manufacturers or remanufacturers obtains a certificate of conformity covering such locomotive or locomotive engine, the requirements of subparts C, D, F, and G of this part shall apply to the manufacturer or remanufacturer that obtains the certificate of conformity. Other manufacturers or remanufacturers are required to comply with the requirements of subparts C, D, F, and G of this part only when notified by the Administrator. Such notification by the Administrator shall specify a reasonable time period in which the manufacturer or remanufacturer shall comply with the requirements identified in the notice.

§ 92.210 Amending the application and certificate of conformity.

(a) The manufacturer or remanufacturer of locomotives or locomotive engines must notify the Administrator when changes to information required to be described in the application for certification are to be made to a product line covered by a certificate of conformity. This notification must include a request to amend the application or the existing certificate of conformity. Except as provided in paragraph (e) of this section, no manufacturer or remanufacturer shall make said changes or produce said locomotives or engines prior to receiving approval from EPA.

(b) A manufacturer's or remanufacturer's request to amend the application or the existing certificate of conformity shall include the following information:

(1) A full description of the change to be made in production, or of the locomotive or engine to be added;

(2) Engineering evaluations or data showing that locomotives or engines as modified or added will comply with all applicable emission standards; and

(3) A determination whether the manufacturer's or remanufacturer's original test fleet selection is still appropriate, and if the original test fleet selection is determined not to be appropriate, test fleet selection(s) representing the locomotives or engines changed or added which would have been required if the locomotives or engines had been included in the original application for certification.

(c) The Administrator may require the manufacturer or remanufacturer to perform tests on the locomotive or engine representing the locomotive or engine to be added or changed.

(d) *Decision by Administrator*. (1) Based on the description of the amendment and data derived from such testing as the Administrator may require or conduct, the Administrator will determine whether the change or addition would still be covered by the certificate of conformity then in effect.

(2) If the Administrator determines that the change or new locomotive(s) or engine(s) meets the requirements of this subpart and the Act, the appropriate certificate of conformity shall be amended.

(3) If the Administrator determines that the changed or new locomotive(s) or engine(s) does not meet the requirements of this subpart and the Act, the certificate of conformity will not be amended. The Administrator shall provide a written explanation to the manufacturer or remanufacturer of the decision not to amend the certificate. The manufacturer or remanufacturer may request a hearing on a denial.

(e) A manufacturer or remanufacturer may make changes in or additions to production locomotives or engines concurrently with the notification to the Administrator as required by paragraph (a) of this section, if the manufacturer or remanufacturer complies with the following requirements:

(1) In addition to the information required in paragraph (b) of this section, the manufacturer or remanufacturer must supply supporting documentation, test data, and engineering evaluations as appropriate to demonstrate that all affected locomotives and engines will still meet applicable emission standards.

(2) If, after a review, the Administrator determines additional testing is required, the manufacturer or remanufacturer must provide required test data within 30 days or cease production of the affected locomotives or engines.

(3) If the Administrator determines that the affected locomotives or engines do not meet applicable requirements, the Administrator will notify the manufacturer or remanufacturer to cease production of the affected locomotives or engines and to recall and correct at no expense to the owner all affected locomotives or engines previously produced.

(4) Election to produce locomotives or engines under this paragraph will be deemed to be a consent to recall all locomotives or engines which the Administrator determines do not meet applicable standards and to cause such nonconformity to be remedied at no expense to the owner.

§ 92.211 Emission-related maintenance instructions for purchasers.

(a) The manufacturer or remanufacturer shall furnish or cause to be furnished to the ultimate purchaser or owner of each new locomotive, or new locomotive engine, subject to the standards prescribed in § 92.8, written instructions for the proper maintenance and use of the locomotive, or locomotive engine, as are reasonable and necessary to assure the proper functioning of the emissions control system, consistent with the applicable provisions of paragraph (b) of this section.

(1) The maintenance and use instructions required by this section shall be clear and easily understandable.

(2) The maintenance instructions required by this section shall contain a general description of the documentation which would demonstrate that the ultimate purchaser or any subsequent owner had complied with the instructions.

(b)(1) The manufacturer or remanufacturer must provide in boldface type on the first page of the written maintenance instructions notice that maintenance, replacement, or repair of the emission control devices and systems may be performed by any locomotive or locomotive engine repair establishment or individual.

(2) The instructions under paragraph (b)(1) of this section will not include any condition on the ultimate purchaser's or owner's using, in connection with such locomotive or locomotive engine, any component or service (other than a component or service provided without charge under the terms of the purchase agreement) which is identified by brand, trade, or corporate name. Such instructions also will not directly or indirectly distinguish between service performed by any other service establishments with which such manufacturer or remanufacturer has a commercial relationship and service performed by independent locomotive or locomotive engine repair facilities which such manufacturer or remanufacturer has no commercial relationship.

(3) The prohibition of paragraph (b)(2) of this section may be waived by the Administrator if:

(i) The manufacturer or remanufacturer satisfies the Administrator that the locomotive or locomotive engine will function properly only if the component or service so identified is used in connection with such locomotive or locomotive engine; and

(ii) The Administrator finds that such a waiver is in the public interest.

(c) The manufacturer or remanufacturer shall provide to the Administrator, no later than the time of the submission required by § 92.203, a copy of the emission-related maintenance instructions which the manufacturer or remanufacturer proposes to supply to the ultimate purchaser or owner in accordance with this section. The Administrator will review such instructions to determine whether they are reasonable and necessary to assure the proper functioning of the locomotive's, or locomotive engine's emission control systems. If the Administrator determines that such instructions are not reasonable and necessary to assure the proper functioning of the emission control systems, he/she may disapprove the application for certification, or may require that the manufacturer or remanufacturer modify the instructions.

(d) Any revision to the maintenance instructions which will affect emissions shall be supplied to the Administrator at least 30 days before being supplied to the ultimate purchaser or owner unless the Administrator consents to a lesser period of time, and is subject to the provisions of § 92.210.

§ 92.212 Labeling.

(a) *General requirements.* Each new locomotive and new locomotive engine, subject to the emission standards of this part and covered by a certificate of conformity under § 92.208, shall be labeled by the manufacturer or remanufacturer in the manner described in this section at the time of manufacture or remanufacture.

(b) *Locomotive labels.* (1) Locomotive labels meeting the specifications of paragraph (b)(2) of this section shall be applied by:

(i) The manufacturer at the point of original manufacture; and

(ii) The remanufacturer at the point of original remanufacture; and

(iii) Any remanufacturer certifying a locomotive or locomotive engine to an FEL different from the last FEL or standard to which the locomotive was previously certified.

(2)(i) Locomotive labels shall be permanent and legible and shall be affixed to the locomotive in a position in which it will remain readily visible.

(ii) The label shall be attached to a locomotive part necessary for normal operation and not normally requiring replacement during the service life of the locomotive.

(iii) The label shall be affixed by the manufacturer or remanufacturer, in such manner that it cannot be removed without destroying or defacing the label. The label shall not be affixed to any equipment which is easily detached from such locomotive.

(iv) The label may be made up of more than one piece, provided that all pieces are permanently attached to the same locomotive part.

(v) The label shall contain the following information lettered in the English language in block letters and numerals, which shall be of a color that contrasts with the background of the label:

(A) The label heading: Original Locomotive Emission Control Information.

(B) Full corporate name and trademark of the manufacturer or remanufacturer.

(C) Engine family and configuration identification.

(D) A prominent unconditional statement of compliance with U.S. Environmental Protection Agency regulations which apply to locomotives and locomotive engines, as applicable:

(*1*) This locomotive conforms to U.S. EPA regulations applicable to locomotives originally manufactured prior to January 1, 2002; or

(*2*) This locomotive conforms to U.S. EPA regulations applicable to locomotives originally manufactured on or after January 1, 2002, but before January 1, 2005; or

(*3*) This locomotive conforms to U.S. EPA regulations applicable to locomotives originally manufactured on or after January 1, 2005.

(E) Date of locomotive original manufacture.

(F) The useful life of the locomotive.

(G) The standards and/or FELS to which the locomotive was certified.

(c) *Engine labels.* (1) Engine labels meeting the specifications of paragraph (c)(2) of this section shall be applied by:

(i) Every manufacturer at the point of original manufacture; and

(ii) Every remanufacturer at the point of remanufacture.

(2)(i) Engine labels shall be permanent and legible and shall be affixed to the engine in a position in which it will be readily visible after installation of the engine in the locomotive.

(ii) The label shall be attached to an engine part necessary for normal operation and not normally requiring replacement during the useful life of the locomotive.

(iii) The label shall be affixed by the manufacturer or remanufacturer, in such manner that it cannot be removed without destroying or defacing the label. The label shall not be affixed to any equipment which is easily detached from such engine.

(iv) The label may be made up of more than one piece, provided that all pieces are permanently attached to the same engine part.

(v) The label shall contain the following information lettered in the English language in block letters and numerals, which shall be of a color that contrasts with the background of the label:

(A) The label heading: Locomotive Emission Control Information.

(B) Full corporate name and trademark of the manufacturer or remanufacturer.

(C) Engine family and configuration identification.

(D) A prominent unconditional statement of compliance with U.S. Environmental Protection Agency regulations which apply to locomotives and locomotive engines, as applicable:

(*1*) This locomotive and locomotive engine conform to U.S. EPA regulations applicable to locomotives and locomotive engines originally manufactured prior to January 1, 2002; or

(*2*) This locomotive and locomotive engine conform to U.S. EPA regulations applicable to locomotives and locomotive engines originally manufactured on or after January 1, 2002, and remanufactured after January 1, 2005; or

(*3*) This locomotive and locomotive engine conform to U.S. EPA regulations applicable to locomotives and locomotive engines originally manufactured on or after January 1, 2005.

(E) The useful life of the locomotive or locomotive engine.

(F) The standards and/or FELS to which the locomotive or locomotive engine was certified.

(G) Engine tune-up specifications and adjustments, as recommended by the manufacturer or remanufacturer, in accordance with the applicable emission standards, including but not limited to idle speed(s), injection timing or ignition timing (as applicable), valve lash (as applicable), as well as other parameters deemed necessary by the manufacturer or remanufacturer.

(d) The provisions of this section shall not prevent a manufacturer or remanufacturer from also providing on the label any other information that such manufacturer or remanufacturer deems necessary for, or useful to, the proper operation and satisfactory maintenance of the locomotive or engine.

§ 92.213 Submission of locomotive and engine identification numbers.

(a) Upon request of the Administrator, the manufacturer or remanufacturer of any locomotive or locomotive engine covered by a certificate of conformity shall, within 30 days of receipt of such request, identify by locomotive and/or engine identification number, the locomotives or engines covered by the certificate of conformity.

(b) The manufacturer or remanufacturer of any locomotives or locomotive engines covered by a certificate of conformity shall provide to the Administrator, within 60 days of the issuance of a certificate of conformity, an explanation of the elements in any locomotive or engine identification coding system in sufficient detail to enable the Administrator to identify those locomotives or engines which are covered by a certificate of conformity.

EFFECTIVE DATE NOTE: At 63 FR 19051, Apr. 16, 1998, § 92.213 was added. This section contains information collection and recordkeeping requirements and will not become

effective until approval has been given by the Office of Management and Budget.

§ 92.214 Production locomotives and engines.

Any manufacturer or remanufacturer obtaining certification under this part shall supply to the Administrator, upon his/her request, a reasonable number of production locomotives or locomotive engines, as specified by the Administrator. The maximum number of locomotives or locomotive engines that may be supplied to the Administrator is five per model year. The locomotives or locomotive engines shall be representative of the engines, emission control systems, and fuel systems offered and typical of production locomotives or engines available for sale, or use by railroads, under the certificate. These locomotives or engines shall be supplied for testing at such time and place and for such reasonable periods as the Administrator may require.

§ 92.215 Maintenance of records; submittal of information; right of entry.

(a) Any manufacturer or remanufacturer subject to any of the standards or procedures prescribed in this subpart shall establish, maintain and retain the following adequately organized and indexed records:

(1) *General records.* The records required to be maintained by this paragraph (a) shall consist of:

(i) Identification and description of all certification locomotives or certification locomotive engines for which testing is required under this subpart.

(ii) A description of all emission control systems which are installed on or incorporated in each certification locomotive or certification locomotive engine.

(iii) A description of all procedures used to test each such certification locomotive or certification locomotive engine.

(iv) A copy of all applications for certification, filed with the Administrator.

(2) *Individual records.* (i) A brief history of each locomotive or locomotive engine used for certification under this subpart including:

(A) In the case where a current production engine is modified for use as a certification engine or in a certification locomotive, a description of the process by which the engine was selected and of the modifications made. In the case where the certification locomotive or the engine for a certification locomotive is not derived from a current production engine, a general description of the buildup of the engine (e.g., whether experimental heads were cast and machined according to supplied drawings). In the cases in the previous two sentences, a description of the origin and selection process for fuel system components (carburetor, fuel injection components), ignition system components, intake air pressurization and cooling system components, cylinders, pistons and piston rings, exhaust smoke control system components, and exhaust aftertreatment devices as applicable, shall be included. The required descriptions shall specify the steps taken to assure that the certification locomotive or certification locomotive engine, with respect to its engine, drivetrain, fuel system, emission control system components, exhaust aftertreatment devices, exhaust smoke control system components or any other devices or components as applicable, that can reasonably be expected to influence exhaust emissions will be representative of production locomotives or locomotive engines and that either: All components and/or locomotive or engine, construction processes, component inspection and selection techniques, and assembly techniques employed in constructing such locomotives or engines are reasonably likely to be implemented for production locomotives or engines; or that they are as close as practicable to planned construction and assembly processed.

(B) A complete record of all emission tests performed (except tests performed by EPA directly), including test results, the date and purpose of each test, and the number of miles or megawatt-hours accumulated on the locomotive or the number of megawatt-hours accumulated on the engine.

(C) A record and description of all maintenance and other servicing performed, giving the date of the maintenance or service and the reason for it.

(D) A record and description of each test performed to diagnose engine or emission control system performance, giving the date and time of the test and the reason for it.

(E) A brief description of any significant events affecting the locomotive or engine during the period covered by the history and not described by an entry under one of the previous headings, including such extraordinary events as locomotive accidents or accidents involving the engine or dynamometer runaway.

(ii) Each such history shall be started on the date that the first of any of the selection or buildup activities in paragraph (a)(2)(i)(A) of this section occurred with respect to the certification locomotive or engine and shall be kept in a designated location.

(3) All records, other than routine emission test records, required to be maintained under this subpart shall be retained by the manufacturer or remanufacturer for a period of 8 years after issuance of all certificates of conformity to which they relate. Routine emission test records shall be retained by the manufacturer or remanufacturer for a period of one (1) year after issuance of all certificates of conformity to which they relate. Records may be retained as hard copy or reduced to computer disks, etc., depending on the record retention procedures of the manufacturer or remanufacturer: *Provided*, that in every case all the information contained in the hard copy shall be retained.

(4) Nothing in this section limits the Administrator's discretion in requiring the manufacturer or remanufacturer to retain additional records or submit information not specifically required by this section.

(5) Pursuant to a request made by the Administrator, the manufacturer or remanufacturer shall submit to him/her the information that is required to be retained.

(6) EPA may void a certificate of conformity *ab initio* for a locomotive or engine family for which the manufacturer or remanufacturer fails to retain the records required in this section or to provide such information to the Administrator upon request.

(b) The manufacturer or remanufacturer of any locomotive or locomotive engine subject to any of the standards prescribed in this subpart shall submit to the Administrator, at the time of issuance by the manufacturer or remanufacturer, copies of all instructions or explanations regarding the use, repair, adjustment, maintenance, or testing of such locomotive or engine, relevant to the control of crankcase, or exhaust emissions issued by the manufacturer or remanufacturer, for use by other manufacturers or remanufacturers, assembly plants, distributors, dealers, owners and operators. Any material not translated into the English language need not be submitted unless specifically requested by the Administrator.

(c) Any manufacturer or remanufacturer participating in averaging, banking and trading program of subpart D of this part must comply with the maintenance of records requirements of § 92.308.

(d)(1) Any manufacturer or remanufacturer who has applied for certification of a new locomotive or new locomotive engine subject to certification test under this subpart shall admit or cause to be admitted any EPA Enforcement Officer during operating hours on presentation of credentials to any of the following:

(i) Any facility where any such tests or any procedures or activities connected with such test are or were performed;

(ii) Any facility where any locomotive or locomotive engine which is being tested (or was tested, or is to be tested) is present;

(iii) Any facility where any construction process or assembly process used in the modification or buildup of such a locomotive or engine into a certification locomotive or certification engine is taking place or has taken place; or

(iv) Any facility where any record or other document relating to any of the above is located.

(2) Upon admission to any facility referred to in paragraph (d)(1) of this section, any EPA Enforcement Officer shall be allowed:

(i) To inspect and monitor any part or aspect of such procedures, activities and testing facilities including, but not limited to, monitoring locomotive or engine preconditioning, emissions tests, mileage (or service) accumulation, maintenance, and locomotive or engine storage procedures, and to verify correlation or calibration of test equipment;

(ii) To inspect and make copies of any such records, designs, or other documents, including those records specified in Subpart D of this part; and

(iii) To inspect and/or photograph any part or aspect of any such certification locomotive, or certification locomotive engine and any components to be used in the construction thereof.

(3) In order to allow the Administrator to determine whether or not production locomotives, or production locomotive engines, conform to the conditions upon which a certificate of conformity has been issued, or conform in all material respects to the design specifications applicable to those locomotives, or engines, as described in the application for certification for which a certificate of conformity has been issued, any manufacturer or remanufacturer shall admit any EPA Enforcement Officer on presentation of credentials to:

(i) Any facility where any document, design or procedure relating to the translation of the design and construction of engines and emission related components described in the application for certification or used for certification testing into production locomotives or production engines is located or carried on;

(ii) Any facility where any locomotives or locomotive engines, to be introduced into commerce are manufactured or remanufactured; and

(iii) Any facility where records specified this section are located.

(4) On admission to any such facility referred to in paragraph (d)(3) of this section, any EPA Enforcement Officer shall be allowed:

(i) To inspect and monitor any aspects of such manufacture or remanufacture and other procedures;

(ii) To inspect and make copies of any such records, documents or designs;

(iii) To inspect and photograph any part or aspect of any such locomotive(s) or locomotive engine(s) and any component used in the assembly thereof that are reasonably related to the purpose of his/her entry; and

(iv) To inspect and make copies of any records and documents specified this section.

(5) Any EPA Enforcement Officer shall be furnished by those in charge of a facility being inspected with such reasonable assistance as he/she may request to help him/her discharge any function listed in this part. Each applicant for or recipient of certification is required to cause those in charge of a facility operated for its benefit to furnish such reasonable assistance without charge to EPA whether or not the applicant controls the facility.

(6) The duty to admit or cause to be admitted any EPA Enforcement Officer applies to any facility involved in the manufacturing or assembling of locomotives, remanufacturing systems, or locomotive engines, or the installation of locomotive engines or remanufacturing systems, whether or not the manufacturer or remanufactuer owns or controls the facility in question and applies both to domestic and to foreign manufacturers or remanufacturers and facilities. EPA will not attempt to make any inspections which it has been informed that local law forbids. However, if local law makes it impossible to do what is necessary to insure the accuracy of data generated at a facility, no informed judgment that a locomotive or locomotive engine is certifiable or is covered by a certificate can properly be based on those data. It is the responsibility of the manufacturer or remanufacturer to locate its testing and manufacturing and/or remanufacturing facilities in jurisdictions where this situation will not arise.

(7) For purposes of this section:

(i) ''Presentation of credentials'' shall mean display of the document

designating a person as an EPA Enforcement Officer.

(ii) Where locomotive, component or engine storage areas or facilities are concerned, ''operating hours'' shall mean all times during which personnel other than custodial personnel are at work in the vicinity of the area or facility and have access to it.

(iii) Where facilities or areas other than those covered by paragraph (d)(7)(ii) of this section are concerned, ''operating hours'' shall mean all times during which an assembly line is in operation or all times during which testing, maintenance, mileage (or service) accumulation, production or compilation of records, or any other procedure or activity related to certification testing, to translation of designs from the test stage to the production stage, or to locomotive (or engine) manufacture, remanufacture, or assembly is being carried out in a facility.

(iv) ''Reasonable assistance'' includes, but is not limited to, clerical, copying, interpretation and translation services, the making available on request of personnel of the facility being inspected during their working hours to inform the EPA Enforcement Officer of how the facility operates and to answer his questions, and the performance on request of emissions tests on any locomotive (or engine) which is being, has been, or will be used for certification testing. Such tests shall be nondestructive, but may require appropriate mileage (or service) accumulation. A manufacturer or remanufacturer may be compelled to cause the personal appearance of any employee at such a facility before an EPA Enforcement Officer by written request for his appearance, signed by the Assistant Administrator for Air and Radiation or the Assistant Administrator for Enforcement and Compliance Assurance, served on the manufacturer or remanufacturer. Any such employee who has been instructed by the manufacturer or remanufacturer to appear will be entitled to be accompanied, represented and advised by counsel.

(v) Any entry without 24 hour prior written or oral notification to the affected manufacturer or remanufacturer shall be authorized in writing by the Assistant Administrator for Air and Radiation or the Assistant Administrator for Enforcement and Compliance Assurance.

(8) EPA may void a certificate of conformity ab initio for locomotives or locomotive engines introduced into commerce if the manufacturer or remanufacturer (or contractor for the manufacturer or remanufacturer, if applicable) fails to comply with any provision of this section.

§ 92.216 Hearing procedures.

(a)(1) After granting a request for a hearing under § 92.210 or § 92.208, the Administrator shall designate a Presiding Officer for the hearing.

(2) The General Counsel will represent the Environmental Protection Agency in any hearing under this section.

(3) The hearing shall be held as soon as practicable at a time and place fixed by the Administrator or by the Presiding Officer.

(4) In the case of any hearing requested pursuant to § 92.208, the Administrator may in his/her discretion direct that all argument and presentation of evidence be concluded within such fixed period not less than 30 days as he/she may establish from the date that the first written offer of a hearing is made to the manufacturer. To expedite proceedings, the Administrator may direct that the decision of the Presiding Officer (who may, but need not be, the Administrator) shall be the final EPA decision.

(b)(1) Upon his/her appointment pursuant to paragraph (a) of this section, the Presiding Officer will establish a hearing file. The file shall consist of the notice issued by the Administrator under § 92.210 or § 92.208 together with any accompanying material, the request for a hearing and the supporting data submitted therewith, and all documents relating to the request for certification and all documents submitted therewith, and correspondence and other data material to the hearing.

(2) The hearing file will be available for inspection by the applicant at the office of the Presiding Officer.

(c) An applicant may appear in person, or may be represented by counsel or by any other duly authorized representative.

(d)(1) The Presiding Officer, upon the request of any party, or in his/her discretion, may arrange for a prehearing conference at a time and place specified by him/her to consider the following:

(i) Simplification of the issues;

(ii) Stipulations, admissions of fact, and the introduction of documents;

(iii) Limitation of the number of expert witnesses;

(iv) Possibility of agreement disposing of all or any of the issues in dispute;

(v) Such other matters as may aid in the disposition of the hearing, including such additional tests as may be agreed upon by the parties.

(2) The results of the conference shall be reduced to writing by the Presiding Officer and made part of the record.

(e)(1) Hearings shall be conducted by the Presiding Officer in an informal but orderly and expeditious manner. The parties may offer oral or written evidence, subject to the exclusion by the Presiding Officer of irrelevant, immaterial and repetitious evidence.

(2) Witnesses will not be required to testify under oath. However, the Presiding Officer shall call to the attention of witnesses that their statements may be subject to the provisions of 18 U.S.C. 1001 which imposes penalties for knowingly making false statements or representations, or using false documents in any matter within the jurisdiction of any department or agency of the United States.

(3) Any witness may be examined or cross-examined by the Presiding Officer, the parties, or their representatives.

(4) Hearings shall be reported verbatim. Copies of transcripts of proceedings may be purchased by the applicant from the reporter.

(5) All written statements, charts, tabulations, and similar data offered in evidence at the hearings shall, upon a showing satisfactory to the Presiding Officer of their authenticity, relevancy, and materiality, be received in evidence and shall constitute a part of the record.

(6) Oral argument may be permitted in the discretion of the Presiding Officer and shall be reported as part of the record unless otherwise ordered by him/her.

(f)(1) The Presiding Officer shall make an initial decision which shall include written findings and conclusions and the reasons or basis therefor on all the material issues of fact, law, or discretion presented on the record. The findings, conclusions, and written decision shall be provided to the parties and made a part of the record. The initial decision shall become the decision of the Administrator without further proceedings unless there is an appeal to the Administrator or motion for review by the Administrator within 30 days of the date the initial decision was filed.

(2) On appeal from or review of the initial decision the Administrator shall have all the powers which he/she would have in making the initial decision including the discretion to require or allow briefs, oral argument, the taking of additional evidence or the remanding to the Presiding Officer for additional proceedings. The decision by the Administrator shall include written findings and conclusions and the reasons or basis therefor on all the material issues of fact, law, or discretion presented on the appeal or considered in the review.

EFFECTIVE DATE NOTE: At 63 FR 19053, Apr. 16, 1998, § 92.216 was added. This section contains information collection and recordkeeping requirements and will not become effective until approval has been given by the Office of Management and Budget.

Subpart D—Certification Averaging, Banking, and Trading Provisions

§ 92.301 Applicability.

Locomotive engine families subject to the provisions of subpart A of this part are eligible to participate in the certification averaging, banking, and trading program described in this subpart. The provisions of this subpart apply to manufacturers and remanufacturers of new locomotives and new locomotive engines manufactured or remanufactured in the 1999 model year or later.

§ 92.302 Definitions.

The definitions of subpart A of this part apply to this subpart. The following definitions also apply.

Applicable standard means a standard that would have otherwise been applicable had the locomotive or locomotive engine not been certified under this subpart to an FEL different than that standard.

Broker means any entity that facilitates a trade between a buyer and seller.

Buyer means the entity that receives credits as a result of trade or transfer.

Reserved credits means credits that have been generated but have not yet been reviewed by EPA or used to demonstrate compliance under the averaging provisions of this subpart.

Seller means the entity that provides credits during a trade or transfer.

Transfer means to convey control of credits generated from an individual locomotive to the purchaser, owner or operator of the locomotive at the time of manufacture or remanufacture; or to convey control of previously generated credits from the purchaser, owner or operator of an individual locomotive to the manufacturer or remanufacturer at the time of manufacture or remanufacture.

§ 92.303 General provisions.

(a) Participation in the averaging, banking and trading program is voluntary. A manufacturer or remanufacturer may choose to involve some or all of its families in any or all aspects of the program.

(b) An engine family is eligible to participate in the certification averaging, banking, and trading program for NO_X and PM emissions if it is subject to regulation under this part with certain exceptions specified in paragraph (c) of this section. No averaging, banking and trading program is available for meeting the HC, CO, or smoke emission standards of this part.

(c) Locomotives and locomotive engines may not participate in the certification averaging, banking, and trading program if they are exported. Only locomotive and locomotive engines certified under this part are eligible for inclusion in this certification averaging, banking, and trading program.

(d) Averaging involves the generation of credits by a manufacturer or remanufacturer for use by that same manufacturer or remanufacturer in the same calendar year. A manufacturer or remanufacturer may use averaging during certification to offset an emission exceedance of an engine family caused by an FEL above the applicable emission standard, subject to the provisions of this subpart.

(e) Banking involves the generation of credits by a manufacturer or remanufacturer in a given calendar year for use in a subsequent model year. A manufacturer or remanufacturer may bank actual credits only after the end of the calendar year and after EPA has reviewed the manufacturer's or remanufacturer's end-of-year reports. During the calendar year and before submittal of the end-of-year report, credits originally designated in the certification process for banking will be considered reserved and may be redesignated for trading or averaging in the end-of-year report. Credits declared for banking from the previous calendar year that have not been reviewed by EPA may be used in averaging or trading transactions. However, such credits may be revoked at a later time following EPA review of the end-of-year report or any subsequent audit actions.

(f) Trading involves the sale of banked credits for use in certification of new locomotives and new locomotive engines under this part. Only banked credits may be traded; reserved credits may not be traded.

(g) Credit transfer involves the conveying of control over credits, as defined in § 92.302. Transferred credits can be used in averaging or in subsequent transfers. Transferred credits may also be reserved for later banking. Transferred credits may not be traded unless they have been previously banked.

§ 92.304 Compliance requirements.

(a) Manufacturers or remanufacturers wishing to participate in certification averaging, banking and trading programs shall select a FEL for each engine family they wish to include. The level of the FEL shall be selected

by the manufacturer or remanufacturer, subject to the upper limits described in paragraph (k) of this section. An engine family certified to an FEL is subject to all provisions specified in this part, except that the applicable FEL replaces the applicable NO_X and PM emission standard for the family participating in the averaging, banking, and trading program.

(b) A manufacturer or remanufacturer may certify one or more engine families at FELs above or below the applicable emission standard, provided the summation of the manufacturer's or remanufacturer's projected balance of all credit transactions in a given calendar year is greater than or equal to zero, as calculated for each family under § 92.305 and reported under § 92.309.

(c) Manufacturers and remanufacturers certifying engine families with FELs exceeding the applicable emission standard shall obtain emission credits in amounts sufficient to address the shortfall. Credits may be obtained from averaging, banking, trading or transfer, subject to the restrictions described in this subpart.

(d) Manufacturers and remanufacturers certifying engine families with FELs below the applicable emission standard may generate emission credits to average, bank, trade, or transfer, or a combination thereof.

(e) Credits may only be used for certification; they may not be used to remedy a violation of the FEL determined by production line or in-use testing. Credits may be used to allow subsequent production of engines for an engine family failing production line testing if the manufacturer elects to recertify to a higher FEL

(f) If an FEL is changed after initial certification in any given model year, the manufacturer/remanufacturer must conduct production line testing to verify that the emission levels are achieved.

(g) Manufacturers and remanufacturers participating in the averaging, banking and trading program must demonstrate compliance with the applicable emission standards at the end of the model year. Manufacturers and remanufacturers that have certified engine families to FELs above the applicable emission standards and do not have sufficient emission credits to offset the difference between the emission standard and the FEL for such engine family(ies) will be in violation of the conditions of the certificate of conformity for such engine family(ies). The certificates of conformity may be voided *ab initio* for those engine families.

(h) In the event of a negative credit balance resulting from a credit trade or transfer, both the buyer(s) and the seller(s) are liable, except in cases involving fraud. Certificates of all engine families participating in a negative trade may be voided *ab initio*.

(1) Where a buyer of credits is not responsible for causing the negative credit balance, it is only liable to supply additional credits equivalent to any amount of invalid credits that it used.

(2) Credit holders responsible for the credit shortfall may be subject to the requirements of § 92.309(g)(3).

(i) Averaging sets. This subpart includes separate programs for compliance with each type of cycle-weighted standards in § 92.8 (i.e., line-haul and switch). Credits generated over the line-haul duty-cycle may not be used for compliance with the switch duty-cycle, and credits generated over the switch duty-cycle may not be used for compliance with the line-haul duty-cycle.

(j) Cross tier credit exchanges. Cross tier credit exchanges for NO_X and PM emission credits may be exchanged between and among Tier 0, Tier 1, and Tier 2 engine families with the following exceptions:

(1) For 2005 and 2006 model year freshly manufactured locomotives, manufacturers may use PM credits for all of their freshly manufactured engine families. Manufacturers may use NO_X credits only for engine families that are projected to represent 75 percent or less of their total projected annual production of freshly manufactured locomotives. The remainder must comply with the Tier 2 NO_X emission standards without the use of credits.

(2) For 2007 and later model year freshly manufactured locomotives, manufacturers may use PM credits for all of their freshly manufactured engine families. Manufacturers may use

NO_X credits only for engine families that are projected to represent 50 percent or less of their total projected annual production of freshly manufactured locomotives. The remainder must comply with the Tier 2 NO_X emission standards without the use of credits.

(3) Credits generated from remanufactured locomotives prior to January 1, 2002 and which are banked may only be used for compliance with the Tier 1 or later emission standards.

(k) Upper limits. The FELs for NO_X and PM for new locomotives and new locomotive engines certified to the Tier 1 and Tier 2 standards may not exceed the following values:

(1) Tier 1: the Tier 0 standards.

(2) Tier 2: the Tier 1 standards, except as noted in paragraph (j) of this section.

(l) Credit life shall be unlimited.

(m) Credits may be generated by any certifying manufacturer or remanufacturer and may be held by any of the following entities:

(1) Locomotive or locomotive engine manufacturers;

(2) Locomotive or locomotive engine remanufacturers;

(3) Locomotive or locomotive engine owners;

(4) Locomotive or locomotive engine operators; or

(5) Other entities after notification to EPA.

(n)(1) All locomotives that are certified to an FEL that is different from the emission standard that would otherwise apply to the locomotive or locomotive engine are required to comply with that FEL for the remainder of their service lives, except as allowed by § 92.9(a)(4)(iii) and this subpart.

(2) Manufacturers shall notify the purchaser of any locomotive engine that is certified to an FEL that is different from the emission standard that would otherwise apply that the locomotive or locomotive engine is required to comply with that FEL for the remainder of its service life.

(3) Remanufacturers shall notify the owner of any locomotive or locomotive engine that is certified to an FEL that is different from the emission standard that would otherwise apply that the locomotive (or the locomotive in which the engine is used) is required to comply with that FEL for the remainder of its service life.

§ 92.305 Credit generation and use calculation.

(a) For each participating engine family, NO_X and PM emission credits (positive or negative) are to be calculated according to the following equation and rounded in accordance with ASTM E29–93a, to the nearest Megagram (Mg). Consistent units are to be used throughout the calculation.

(1) When useful life is expressed in terms of megawatt-hrs:

Credits for each engine family are calculated as: Emission credits=(Std − FEL) × (UL) × (Production) × (Fp) × (10^{-3} kW-Mg/MW-g).

(2) Where:

(i) Std=the applicable locomotive and locomotive engine NO_X and/or PM emission standard in grams per kilowatt-hour (exceptions: Std=0.43 g/kW-hr, for Tier 0 and Tier 1 PM line-haul credits; Std=0.59 g/kW-hr, for Tier 0 and Tier 1 PM switch credits; and Std=previous FEL in g/kW-hr, for locomotives that were certified to an FEL other than the standard during the previous useful life).

(ii) FEL=the family emission limit for the engine family in grams per kilowatt-hour. For Tier 1 and Tier 2 engine families, the FEL may not exceed the limit established in § 92.304(k) for each pollutant.

(iii) UL=the sales weighted average useful life in megawatt-hours, based on the sales weighted average horsepower of the engine family (or the subset of the engine family for which credits are being calculated), as specified in the application for certification.

(iv) Production=the number of locomotives or locomotive engines participating in the averaging, banking, and trading program within the given engine family during the calendar year (or the number of locomotives or locomotive engines in the subset of the engine family for which credits are being calculated). Quarterly production projections are used for initial certification. Actual applicable production/sales volumes are used for end-of-year compliance determination.

(v) F_p=the proration factor as determined in paragraph (c) of this section.

(b) When useful life is expressed in terms of miles or years, the useful life in terms of megawatt hours (UL) shall be calculated by dividing the useful life in miles by 100,000, and multiplying by the sales weighted average horsepower of the engine family. Credits are calculated using this UL value in the equations of paragraph (a) of this section.

(c) The proration factor is an estimate of the fraction of a locomotive's service life that remains as a function of age.

(1) The locomotive's age is the length of time in years from the date of original manufacture to the date at which the remanufacture (for which credits are being calculated) is completed, rounded to the next higher year.

(2) The proration factors for ages 1 through 32 are specified in Table D305–1 of this section. For locomotives or locomotive engines more than 32 years old, the proration factor for 32 year old locomotives shall be used.

(3) For replacement or repower engines, the proration factor is based on the age of the locomotive chassis, not the age of the engine.

TABLE TO § 92.305

TABLE D305–1—PRORATION FACTOR

Age	F_p	Age	F_p
1	0.964	17	0.452
2	0.929	18	0.429
3	0.893	19	0.405
4	0.857	20	0.381
5	0.821	21	0.357
6	0.786	22	0.333
7	0.750	23	0.310
8	0.714	24	0.286
9	0.679	25	0.268
10	0.643	26	0.250
11	0.607	27	0.232
12	0.571	28	0.214
13	0.548	29	0.196
14	0.524	30	0.179
15	0.500	31	0.161
16	0.476	32	0.143

§ 92.306 Certification.

(a) In the application for certification a manufacturer or remanufacturer must:

(1) Declare its intent to include specific engine families in the averaging, banking, and/or trading programs. Separate declarations are required for each program (line-haul and switch) and for each pollutant (NO_X and PM).

(2) Declare duty-cycle FELs for each engine family participating in certification averaging, banking, and/or trading.

(i) The FELs must be to the same number of significant digits as the emission standard.

(ii) In no case may the FEL exceed the upper limit prescribed in § 92.304(k).

(3) Conduct and submit detailed calculations of projected emission credits (positive or negative) based on quarterly production projections for each participating family and for each pollutant, using the applicable equation in § 92.305 and the applicable values of the terms in the equation for the specific family.

(i) If the engine family is projected to have negative emission credits, state specifically the source (manufacturer/engine family, remanufacturer/engine family, or transfer) of the credits necessary to offset the credit deficit according to quarterly projected production.

(ii) If the engine family is projected to generate credits, state specifically where the quarterly projected credits will be applied (manufacturer/engine family or remanufacturer/engine family, reserved or transfer).

(4) Submit a statement that the locomotives or locomotive engines for which certification is requested will not, to the best of the manufacturer's or remanufacturer's belief, cause the manufacturer or remanufacturer to have a negative credit balance when all credits are calculated for all the manufacturer's or remanufacturer's engine families participating in the averaging, banking, and trading program.

(b) Based on this information, each manufacturer's certification application must demonstrate:

(1) That at the end of model year production, each engine family has a net emissions balance equal to or greater than zero for any pollutant and program for which participation in certification under averaging, banking, and/or trading is being sought. The equation in section § 92.305 shall be used in this calculation for each engine family.

(2) That the manufacturer or remanufacturer will obtain sufficient credits to be used to comply with the

emission standard for any engine family with an FEL that exceeds the applicable emission standard, or where credits will be applied if the FEL is less than the emission standard. In cases where credits are being obtained, for each engine family involved the manufacturer or remanufacturer must identify specifically the source of the credits being used (manufacturer/engine family, or remanufacturer/engine family, or transfer). All such reports shall include all credits involved in certification averaging, banking, or trading.

(3) In cases where credits are being generated/supplied, each engine family must indicate specifically the designated use of the credits involved (manufacturer/remanufacturer and engine family, reserved or transfer). All such reports shall include all credits involved in certification averaging, banking, or trading.

(c) Manufacturers and remanufacturers must monitor projected versus actual production throughout the model year to ensure that compliance with emission standards is achieved at the end of the model year.

(d) At the end of the model year, the manufacturer or remanufacturer must provide the end-of-year reports required under § 92.309.

(1) Projected credits based on the information supplied in the certification application may be used to obtain a certificate of conformity. However, any such projected credits must be validated based on review of the end of model year reports and may be revoked at a later time based on follow-up audits or any other verification measure deemed appropriate by the Administrator.

(2) Compliance for engine families using averaging, banking, or trading will be determined at the end of the model year. Manufacturers and remanufacturers that have certified engine families with credit balances for NO_X and/or PM that do not equal or exceed zero shall be in violation of the conditions of the certificate of conformity for such engine families. The certificate of conformity may be voided *ab initio* for those engine families.

(e) Other conditions of certification.

(1) All certificates issued are conditional upon compliance by the manufacturer or remanufacturer with the provisions of this subpart both during and after the calendar year of production.

(2) Failure to comply with all provisions of this subpart will be considered to be a failure to satisfy the conditions upon which the certificate was issued, and the certificate may be deemed void *ab initio*.

(3) The manufacturer or remanufacturer (as applicable) bears the burden of establishing to the satisfaction of the Administrator that the conditions upon which the certificate was issued were satisfied or waived.

§ 92.307 Labeling.

For all locomotives and locomotive engines included in the certification averaging, banking, and trading program, the FEL to which the locomotive or locomotive engine is certified must be included on the label required in § 92.212. This label must include the notification specified in § 92.304(n).

§ 92.308 Maintenance of records.

(a) The manufacturer or remanufacturer of any locomotive or locomotive engine that is certified under the averaging, banking, and trading program must establish, maintain, and retain the following adequately organized and indexed records for each such locomotive or locomotive engine produced:

(1) EPA engine family and configuration;

(2) Engine identification number;

(3) Engine calendar year and build date;

(4) Rated horsepower;

(5) Purchaser and destination or owner; and

(6) Assembly plant.

(b) The manufacturer or remanufacturer of any engine family that is certified under the averaging, banking, and trading program must establish, maintain, and retain the following adequately organized and indexed records for each such family:

(1) Model year and EPA engine family;

(2) Family Emission Limit (FEL);

(3) Rated horsepower for each configuration;

(4) Projected applicable production/sales volume for the calendar year;

(5) Actual applicable production/sales volume for the calendar year; and

(6) Useful life.

(c) Any manufacturer or remanufacturer producing an engine family participating in trading or transfer of credits must maintain the following records on a quarterly basis for each engine family in the trading program:

(1) The model year and engine family;

(2) The actual quarterly and cumulative applicable production/sales volume;

(3) The values required to calculate credits as given in § 92.305;

(4) The resulting type and number of credits generated/required;

(5) How and where credit surpluses are dispersed; and

(6) How and through what means credit deficits are met.

(d) The manufacturer or remanufacturer must retain all records required to be maintained under this section for a period of 8 years from the due date for the end-of-calendar year report. Records may be retained as hard copy or reduced to microfilm, ADP diskettes, and so forth, depending on the manufacturer's or remanufacturer's record retention procedure; provided, that in every case all information contained in the hard copy is retained.

(e) Nothing in this section limits the Administrator's discretion in requiring the manufacturer or remanufacturer to retain additional records or submit information not specifically required by this section.

(f) Pursuant to a request made by the Administrator, the manufacturer or remanufacturer must submit to the Administrator the information that the manufacturer or remanufacturer is required to retain.

(g) EPA may void *ab initio* a certificate of conformity for an engine family for which the manufacturer or remanufacturer fails to retain the records required in this section or to provide such information to the Administrator upon request.

EFFECTIVE DATE NOTE: At 63 FR 19056, Apr. 16, 1998, § 92.308 was added. This section contains information collection and recordkeeping requirements and will not become effective until approval has been given by the Office of Management and Budget.

§ 92.309 Reports.

(a) Manufacturer or remanufacturers must submit the certification information as required under § 92.306, and end-of-year reports each year as part of their participation in certification averaging, banking, and trading programs. All entities involved in credit trades or transfers must submit quarterly reports as specified in paragraph (b) of this section.

(b) *Quarterly reports.* (1) Those holding or receiving transferred credits as allowed in § 92.303(m) must submit quarterly reports of their holdings or receipts when credits are gained or lost.

(2) The reports shall include the source or recipient of the credits the amount of credits involved plus remaining balances, details regarding the pollutant, duty-cycle, and model year/Tier as well as the information prescribed in § 92.308(c). Copies of contracts related to credit trading or transfer must be included or supplied by the buyer, seller, and broker, as applicable.

(c) End-of-year reports must include the information prescribed in § 92.308(b). The report shall include a calculation of credit balances for each family to show that the summation of the manufacturer's or remanufacturer's use of credits results in a credit balance equal to or greater than zero. The report shall be consistent in detail with the information submitted under § 92.306 and show how credit surpluses were dispersed and how credit shortfalls were met on a family specific basis. The end-of-year report shall incorporate any information reflected in previous quarterly reports.

(d) The applicable production/sales volume for quarterly and end-of-year reports must be based on the location of either the point of first retail sale by the manufacturer or remanufacturer or the point at which the locomotive is placed into service, whichever occurs first. This is called the final product purchase location.

(e) Each quarterly and end-of-year report submitted shall include a statement certifying to the accuracy and authenticity of the material reported therein.

(f) *Requirements for submission.* (1) Quarterly reports must be submitted within 90 days of the end of the calendar quarter to: Group Manager, Engine Compliance Programs Group, Engine Programs and Compliance Division U.S. Environmental Protection Agency, 6403–J, 1200 Pennsylvania Ave., NW., Washington, DC 20460.

(2) End-of-year reports must be submitted within 120 days of the end of the calendar year to: Group Manager, Engine Compliance Programs Group, Engine Programs and Compliance Division, U.S. Environmental Protection Agency, 6403–J, 1200 Pennsylvania Ave., NW., Washington, DC 20460.

(3) Failure by a manufacturer or a remanufacturer participating in the averaging, banking, or trading program to submit any quarterly or end-of-year reports in the specified time for all engines is a violation of sections 203(a)(1) and 213 of the Clean Air Act for each locomotive or locomotive engine.

(4) A manufacturer or remanufacturer generating credits for banking only who fails to submit end-of-year reports in the applicable specified time period (120 days after the end of the calendar year) may not use or trade the credits until such reports are received and reviewed by EPA. Use of projected credits pending EPA review is not permitted in these circumstances.

(g) *Reporting errors.* (1) Errors discovered by EPA or the manufacturer or the remanufacturer as applicable in the end-of-year report, including errors in credit calculation, may be corrected 180-days subsequent to submission of the end-of-year report. Errors discovered by EPA after 180-days shall be correctable if, as a result of the correction, the manufacturer's or remanufacturer's credits are reduced. Errors in the manufacturer's or remanufacturer's favor are not corrected if discovered after the 180-day correction period allowed.

(2) If EPA or the manufacturer or remanufacturer determines that a reporting error occurred on an end of year report previously submitted to EPA under this section, the manufacturer's or remanufacturer's credits and credit calculations will be recalculated. Erroneous positive credits will be void. Erroneous negative credit balances may be corrected by EPA.

(3) If EPA review of a manufacturer's or remanufacturers end-of-year report indicates a credit shortfall, the manufacturer or remanufacturer will be permitted to purchase the necessary credits to bring the credit balance to zero. These credits must be supplied at the ratio of 1.1 credits for each 1.0 credit needed. If sufficient credits are not available to bring the credit balance to zero for the family(ies) involved, EPA may void the certificate(s) for that family(ies) *ab initio*. In addition, all locomotives and locomotive engines within an engine family for which there are insufficient credits will be considered to have violated the conditions of the certificate of conformity and therefore not covered by that certificate.

(4) If within 180 days of receipt of the manufacturer's or remanufacturer's end-of-year report, EPA review determines a reporting error in the manufacturer's or remanufacturer's favor (that is, resulting in an increased credit balance) or if the manufacturer or remanufacturer discovers such an error within 180 days of EPA receipt of the end-of-year report, the credits are restored for use by the manufacturer or remanufacturer.

EFFECTIVE DATE NOTE: At 63 FR 19057, Apr. 16, 1998, § 92.309 was added. This section contains information collection and recordkeeping requirements and will not become effective until approval has been given by the Office of Management and Budget.

§ 92.310 Notice of opportunity for hearing.

Any voiding of the certificate under this subpart will be made only after the manufacturer or remanufacturer concerned has been offered an opportunity for a hearing conducted in accordance with § 92.216 and, if a manufacturer or remanufacturer requests such a hearing, will be made only after an initial decision by the Presiding Officer.

Subpart E—Emission-Related Defect Reporting Requirements, Voluntary Emission Recall Program

§ 92.401 Applicability.

The requirements of this subpart are applicable to manufacturers and remanufacturers of locomotives and locomotive engines subject to the provisions of subpart A of this part. The requirement to report emission-related defects affecting a given class or category of locomotives or locomotive engines applies for eight years from the end of the year in which such locomotives or locomotive engines were manufactured, or remanufactured, as applicable.

§ 92.402 Definitions.

The definitions of subpart A of this part apply to this subpart.

§ 92.403 Emission defect information report.

(a) A manufacturer or remanufacturer must file a defect information report whenever it determines, in accordance with procedures it established to identify either safety-related or performance defects, (or based on other information) that a specific emission-related defect exists in ten or more locomotives or locomotive engines. No report must be filed under this paragraph for any emission-related defect corrected prior to the sale, or reintroduction into service of a remanufactured locomotive or locomotive engine, of the affected locomotives or locomotive engines to an ultimate purchaser.

(b) Defect information reports required under paragraph (a) of this section must be submitted not more than 15 working days after the same emission-related defect is found to effect 10 or more locomotives or locomotive engines. Information required by paragraph (c) of this section that is either not available within 15 working days or is significantly revised must be submitted as it becomes available.

(c) Except as provided in paragraph (b) of this section, each defect report must contain the following information in substantially the format outlined as follows:

(1) The manufacturer's or remanufacturer's corporate name.

(2) A description of the defect.

(3) A description of each class or category of locomotives or locomotive engines potentially affected by the defect including make, model, calendar year produced, purchaser (or owner) and any other information as may be required to identify the locomotives or locomotive engines affected.

(4) For each class or category of locomotives and locomotive engines described in response to paragraph (c)(3) of this section, the following shall also be provided:

(i) The number of locomotives and/or locomotive engines known or estimated to have the defect and an explanation of the means by which this number was determined.

(ii) The address of the plant(s) at which the potentially defective locomotives or locomotive engines were produced.

(5) An evaluation of the emissions impact of the defect and a description of any operational or performance problems which a defective locomotive or locomotive engine might exhibit.

(6) Available emissions data which relate to the defect.

(7) An indication of any anticipated follow-up by the manufacturer or remanufacturer.

§ 92.404 Voluntary emissions recall reporting.

(a) When any manufacturer or remanufacturer initiates a voluntary emissions recall campaign involving a locomotive or locomotive engine, the manufacturer or remanufacturer shall submit to EPA a report describing the manufacturer's or remanufacturer's voluntary emissions recall plan as prescribed by this section within 15 working days of the date owner notification was begun. The report shall contain the following:

(1) A description of each class or category of locomotives or locomotive engines recalled including the number of locomotives or locomotive engines to be recalled, the calendar year if applicable, the make, the model, and such other information as may be required to identify the locomotives or locomotive engines recalled.

(2) A description of the specific modifications, alterations, repairs, corrections, adjustments, or other changes to be made to correct the locomotives or locomotive engines affected by the emission-related defect.

(3) A description of the method by which the manufacturer or remanufacturer will notify locomotive or locomotive engine owners.

(4) A description of the proper maintenance or use, if any, upon which the manufacturer or remanufacturer conditions eligibility for repair under the remedial plan, an explanation of the manufacturer's or remanufacturer's reasons for imposing any such condition, and a description of the proof to be required of a locomotive or locomotive-engine owner to demonstrate compliance with any such condition.

(5) A description of the procedure to be followed by locomotive or locomotive-engine owners to obtain correction of the nonconformity. This shall include designation of the date on or after which the owner can have the nonconformity remedied, the time reasonably necessary to perform the labor to remedy the defect, and the designation of facilities at which the defect can be remedied.

(6) If some or all the nonconforming locomotives or locomotive engines are to be remedied by persons other than authorized warranty agents of the manufacturer or remanufacturer, a description of the class of persons other than authorized warranty agents of the manufacturer or remanufacturer who will remedy the defect.

(7) A copy of any written notification sent to locomotive or locomotive-engine owners.

(8) A description of the system by which the manufacturer or remanufacturer will assure that an adequate supply of parts will be available to perform the repair under the remedial plan including the date by which an adequate supply of parts will be available to initiate the repair campaign, the percentage of the total parts requirement of each person who is to perform the repair under the remedial plan to be shipped to initiate the campaign, and the method to be used to assure the supply remains both adequate and responsive to owner demand.

(9) Three copies of all necessary instructions to be sent to those persons who are to perform the repair under the remedial plan.

(10) A description of the impact of the changes on fuel consumption, operation or performance, and safety of each class or category of locomotives or locomotive engines to be recalled.

(11) A sample of any label to be applied to locomotives or locomotive engines which participate in the voluntary recall campaign.

(b) Unless otherwise specified by the Administrator, the manufacturer or remanufacturer shall report on the progress of the recall campaign by submitting subsequent reports for six consecutive quarters, or until proven that remedial action has been adequately taken on all affected locomotives or locomotive engines, whichever occurs first, commencing with the quarter after the voluntary emissions recall campaign actually begins. Such reports shall be submitted no later than 25 working days after the close of each calendar quarter. For each class or category of locomotive or locomotive engine subject to the voluntary emissions recall campaign, the quarterly report shall contain the:

(1) Emission recall campaign number, if any, designated by the manufacturer or remanufacturer.

(2) Date owner notification was begun, and date completed.

(3) Number of locomotives or locomotive engines involved in the voluntary emissions recall campaign.

(4) Number of locomotives or locomotive engines known or estimated to be affected by the emission-related defect and an explanation of the means by which this number was determined.

(5) Number of locomotives or locomotive engines inspected pursuant to voluntary emission recall plan.

(6) Number of inspected locomotives or locomotive engines found to be affected by the emissions-related defect.

(7) Number of locomotives or locomotive engines actually receiving repair under the remedial plan.

(8) Number of locomotives or locomotive engines determined to be unavailable for inspection or repair under the remedial plan due to exportation,

scrappage, or for other reasons (specify).

(9) Number of locomotives or locomotive engines determined to be ineligible for remedial action due to a failure to properly maintain or use such locomotives or locomotive engines.

(10) Three copies of any service bulletins which relate to the defect to be corrected and which have not previously been reported.

(11) Three copies of all communications transmitted to locomotive or locomotive-engine owners which relate to the defect to be corrected and which have not previously been submitted.

(c) If the manufacturer or remanufacturer determines that any of the information requested in paragraph (b) of this section has changed or was incorrect, revised information and an explanatory note shall be submitted. Answers to paragraphs (b) (5), (6), (7), (8), and (9) of this section shall be cumulative totals.

(d) The manufacturer or remanufacturer shall maintain in a form suitable for inspection, such as computer information storage devices or card files, the names and addresses of locomotive and locomotive-engine owners:

(1) To whom notification was given;

(2) Who received remedial repair or inspection under the remedial plan; and

(3) Who were determined not to qualify for such remedial action when eligibility is conditioned on proper maintenance or use.

(e) The records described in paragraph (d) of this section shall be made available to the Administrator upon request.

§ 92.405 Alternative report formats.

(a) Any manufacturer or remanufacturer may submit a plan for making either of the reports required by §§ 92.403 and 92.404 on computer diskettes, magnetic tape or other machine readable format. The plan shall be accompanied by sufficient technical detail to allow a determination that data requirements of these sections will be met and that the data in such format will be usable by EPA.

(b) Upon approval by the Administrator of the reporting system, the manufacturer or remanufacturer may use such system until otherwise notified by the Administrator.

§ 92.406 Reports filing: record retention.

(a) The reports required by §§ 92.403 and 92.404 shall be sent to: Group Manager, Engine Compliance Programs Group, Engine Programs and Compliance Division, U.S. Environmental Protection Agency, 6403–J, 1200 Pennsylvania Ave., NW., Washington, DC 20460.

(b) The information gathered by the manufacturer or remanufacturer to compile the reports required by §§ 92.403 and 92.404 shall be retained for not less than 8 years from the date of the manufacture of the locomotives or locomotive engines and shall be made available to duly authorized officials of the EPA upon request.

EFFECTIVE DATE NOTE: At 63 FR 19059, Apr. 16, 1998, § 92.406 was added. This section contains information collection and recordkeeping requirements and will not become effective until approval has been given by the Office of Management and Budget.

§ 92.407 Responsibility under other legal provisions preserved.

The filing of any report under the provisions of this subpart shall not affect a manufacturer's or a remanufacturer's responsibility to file reports or applications, obtain approval, or give notice under any provision of law.

§ 92.408 Disclaimer of production warranty applicability.

(a) The act of filing an Emission Defect Information Report pursuant to § 92.403 is inconclusive as to the existence of a defect subject to the warranty provided by section 207(a) of the Act.

(b) A manufacturer or remanufacturer may include on each page of its Emission Defect Information Report a disclaimer stating that the filing of a Defect Information Report pursuant to these regulations is not conclusive as to the applicability of the Production Warranty provided by section 207(a) of the Act.

Subpart F—Manufacturer and Remanufacturer Production Line Testing and Audit Programs

§ 92.501 Applicability.

The requirements of this subpart are applicable to manufacturers and remanufacturers of locomotives and locomotive engines subject to the provisions of subpart A of this part, except as follows:

(a) The requirements of §§ 92.503, 92.505, 92.506, 92.507, 92.508, and 92.510 only apply to manufacturers of freshly manufactured locomotives or locomotive engines (including those used for repowering). The Administrator may also apply these requirements to remanufacturers of any locomotives or locomotive engines for which there is reason to believe production problems exist that could affect emissions performance. EPA will notify such remanufacturers when it makes a determination that production problems may exist that could affect emissions performance, and the requirements of these sections shall apply as specified in the notice.

(b) The requirements of § 92.511 only apply to remanufacturers of locomotives and locomotive engines.

§ 92.502 Definitions.

The definitions in subpart A of this part apply to this subpart.

§ 92.503 General Requirements.

(a) Manufacturers (and remanufacturers, where applicable) shall test production line locomotives or locomotive engines using the test procedures specified in § 92.506. The Administrator may require manufacturers and remanufacturers to conduct production line testing on locomotives. If the Administrator determines that locomotive testing is required, he/she shall notify the manufacturer or remanufacturer, and shall specify in such notice the time period in which the manufacturer or remanufacturer shall complete such testing.

(b) Remanufacturers of locomotives and locomotive engines shall conduct audits pursuant to the requirements of § 92.511 to ensure that remanufactured locomotives and locomotive engines comply with the requirements of this part.

(c) Upon request, the Administrator may also allow manufacturers (and remanufacturers, where applicable) to conduct alternate production line testing programs, provided the Administrator determines that the alternate production line testing program provides equivalent assurance that the locomotives and locomotive engines that are being produced conform to the provisions of this part. As part of this allowance or for other reasons, the Administrator may waive some or all of the requirements of this subpart.

[63 FR 18998, Apr. 16, 1998, as amended at 65 FR 73331, Dec. 29, 1999]

§ 92.504 Right of entry and access.

(a) To allow the Administrator to determine whether a manufacturer or remanufacturer is complying with the provisions of this part, one or more EPA enforcement officers may enter during operating hours and upon presentation of credentials any of the following places:

(1) Any facility, including ports of entry, where any locomotive or locomotive engine is to be introduced into commerce or any emission-related component is manufactured, remanufactured, assembled, or stored;

(2) Any facility where any test or audit conducted pursuant to a manufacturer's or remanufacturer's production line testing or auditing program or any procedure or activity connected with such test or audit is or was performed;

(3) Any facility where any test locomotive or locomotive engine is present; and

(4) Any facility where any record required under § 92.509 or other document relating to this subpart is located.

(b) Upon admission to any facility referred to in paragraph (a) of this section, EPA enforcement officers are authorized to perform the following inspection-related activities:

(1) To inspect and monitor any aspect of locomotive or locomotive engine manufacture, remanufacture, assembly, storage, testing and other procedures, and to inspect and monitor the facilities in which these procedures are conducted;

(2) To inspect and monitor any aspect of locomotive or locomotive engine test procedures or activities, including test locomotive or engine selection, preparation and service accumulation, emission test cycles, and maintenance and verification of test equipment calibration;

(3) To inspect and make copies of any records or documents related to the assembly, storage, selection, and testing of a locomotive or locomotive engine; and

(4) To inspect and photograph any part or aspect of any locomotive or locomotive engine and any component used in the assembly thereof that is reasonably related to the purpose of the entry.

(c) EPA enforcement officers are authorized to obtain reasonable assistance without cost from those in charge of a facility to help the officers perform any function listed in this subpart and they are authorized to request the manufacturer or remanufacturer to make arrangements with those in charge of a facility operated for the manufacturer or remanufacturer's benefit to furnish reasonable assistance without cost to EPA.

(1) Reasonable assistance includes, but is not limited to, clerical, copying, interpretation and translation services; the making available on an EPA enforcement officer's request of personnel of the facility being inspected during their working hours to inform the EPA enforcement officer of how the facility operates and to answer the officer's questions; and the performance on request of emission tests on any locomotive or engine which is being, has been, or will be used for production line testing or auditing.

(2) By written request, signed by the Assistant Administrator for Air and Radiation or the Assistant Administrator for Enforcement and Compliance Assurance, and served on the manufacturer or remanufacturer, a manufacturer or remanufacturer may be compelled to cause the personal appearance of any employee at such a facility before an EPA enforcement officer. Any such employee who has been instructed by the manufacturer or remanufacturer to appear will be entitled to be accompanied, represented, and advised by counsel.

(d) EPA enforcement officers are authorized to seek a warrant or court order authorizing the EPA enforcement officers to conduct the activities authorized in this section, as appropriate, to execute the functions specified in this section. EPA enforcement officers may proceed ex parte to obtain a warrant or court order whether or not the EPA enforcement officers first attempted to seek permission from the manufacturer or remanufacturer or the party in charge of the facility(ies) in question to conduct the activities authorized in this section.

(e) A manufacturer or remanufacturer is responsible for locating its foreign testing, manufacturing, and remanufacturing facilities in jurisdictions where local law does not prohibit an EPA enforcement officer(s) from conducting the activities specified in this section. EPA will not attempt to make any inspections which it has been informed local foreign law prohibits.

EFFECTIVE DATE NOTE: At 63 FR 19060, Apr. 16, 1998, § 92.504 was added. This section contains information collection and recordkeeping requirements and will not become effective until approval has been given by the Office of Management and Budget.

§ 92.505 Sample selection for testing.

(a) At the start of each model year, the manufacturer or remanufacturer will begin to randomly select locomotives or locomotive engines from each engine family for production line testing at a rate of one percent. Each locomotive or locomotive engine will be selected from the end of the production line. Testing shall be performed throughout the entire model year to the extent possible.

(1) The required sample size for an engine family is the lesser of five tests per model year or one percent of projected annual production, with a minimum sample size for an engine family of one test per model year provided that no engine tested fails to meet applicable emission standards.

(2) Manufacturers and remanufacturers may elect to test additional locomotives or locomotive engines. All additional locomotives or locomotive engines must be tested in accordance with the applicable test procedures of this part.

(b) The manufacturer or remanufacturer must assemble the test locomotives or locomotive engines using the same mass production process that will be used for locomotives or locomotive engines to be introduced into commerce.

(c) No quality control, testing, or assembly procedures will be used on any test locomotive or locomotive engine or any portion thereof, including parts and subassemblies, that have not been or will not be used during the production and assembly of all other locomotives or locomotive engines of that family, except with the approval of the Administrator.

§ 92.506 Test procedures.

(a)(1) For locomotives and locomotive engines subject to the provisions of this subpart, the prescribed test procedures are those procedures described in subpart B of this part, except as provided in this section.

(2) The Administrator may, on the basis of a written application by a manufacturer or remanufacturer, prescribe test procedures other than those specified in paragraph (a)(1) of this section for any locomotive or locomotive engine he/she determines is not susceptible to satisfactory testing using procedures specified in paragraph (a)(1) of this section.

(3) If test procedures other than those in subpart B were used in certification of the engine family being tested under this subpart (other than alternate test procedures necessary for testing of a development engine instead of a low mileage locomotive or a low hour engine under § 92.9), the manufacturer or remanufacturer shall use the test procedures used in certification for production line testing.

(b)(1) The manufacturer or remanufacturer may not adjust, repair, prepare, modify, or perform any emission test on, any test locomotive or locomotive engine unless this adjustment, repair, preparation, modification and/or test is documented in the manufacturer's or remanufacturer's locomotive or engine assembly and inspection procedures and is actually performed by the manufacturer or remanufacturer or unless this adjustment, repair, preparation, modification and/or test is required or permitted under this subpart or is approved in advance by the Administrator.

(2) Any adjustable locomotive or locomotive engine parameter must be set to values or positions that are within the range recommended to the ultimate purchaser.

(3) The Administrator may adjust or require to be adjusted any engine parameter which the Administrator has determined to be subject to adjustment for certification and production line testing, to any setting within the specified adjustable range of that parameter, as determined by the Administrator, prior to the performance of any test.

(c) *Service Accumulation/Green Engine factor*. The manufacturer or remanufacturer shall accumulate service on the locomotives and locomotive engines to be tested up to 300 hours of operation. In lieu of conducting such service accumulation, the manufacturer or remanufacturer may establish a Green Engine factor for each regulated pollutant for each engine family to be used in calculating emissions test results. The manufacturer or remanufacturer shall obtain the approval of the Administrator prior to using a Green Engine factor.

(d) The manufacturer or remanufacturer may not perform any maintenance on test locomotives or locomotive engines after selection for testing.

(e) If a locomotive or locomotive engine is shipped to a facility other than the production facility for production line testing, and an adjustment or repair is necessary because of such shipment, the locomotive or locomotive engine manufacturer or remanufacturer must perform the necessary adjustment or repair only after the initial test of the locomotive or locomotive engine, except where the Administrator has determined that the test would be impossible to perform or

would permanently damage the locomotive engine.

(f) If a locomotive or locomotive engine cannot complete the service accumulation, if applicable, or an emission test, because of a malfunction, the manufacturer or remanufacturer may request that the Administrator authorize either the repair of that locomotive or locomotive engine or its deletion from the test sequence.

(g) Retesting. (1) If a locomotive or locomotive engine manufacturer or remanufacturer determines that any production line emission test of a locomotive or locomotive engine is invalid, the locomotive or locomotive engine must be retested in accordance with the requirements of this subpart. Emission results from all tests must be reported to EPA, including test results the manufacturer or remanufacturer determines are invalid. The locomotive or locomotive engine manufacturer or remanufacturer must also include a detailed explanation of the reasons for invalidating any test in the quarterly report required in § 92.508(e). In the event a retest is performed, a request may be made to the Administrator, within ten days of the end of the production quarter, for permission to substitute the after-repair test results for the original test results. The Administrator will either affirm or deny the request by the locomotive or locomotive engine manufacturer or remanufacturer within ten working days from receipt of the request.

[63 FR 18998, Apr. 16, 1998, as amended at 65 FR 73331, Dec. 29, 1999]

§ 92.507 Sequence of testing.

If one or more locomotives or locomotive engines fail a production line test, then the manufacturer or remanufacturer must test two additional locomotives or locomotive engines from the next fifteen produced in that engine family, for each locomotive or locomotive engine that fails.

§ 92.508 Calculation and reporting of test results.

(a) Manufacturers and remanufacturers shall calculate initial test results using the applicable test procedure specified in § 92.506(a). These results must also include the green engine factor, if applicable. The manufacturer or remanufacturer shall round these results, in accordance with ASTM E29–93a (incorporated by reference at § 92.5), to the number of decimal places contained in the applicable emission standard expressed to one additional significant figure.

(b) Final test results shall be calculated by summing the initial test results derived in paragraph (a) of this section for each test locomotive or locomotive engine, dividing by the number of tests conducted on the locomotive or locomotive engine, and rounding in accordance with ASTM E29–93a (incorporated by reference at § 92.5) to the same number of decimal places contained in the applicable standard expressed to one additional significant figure.

(c) Manufacturers and remanufacturers shall calculate the final test results for each test locomotive or locomotive engine by applying the appropriate deterioration factors, derived in the certification process for the engine family, to the final test results, and rounding in accordance with ASTM E 29–93a (incorporated by reference at § 92.5) to the same number of decimal places contained in the applicable standard expressed to one additional significant figure.

(d) If, subsequent to an initial failure of a production line test, the average of the test results for the failed locomotive or locomotive engine and the two additional locomotives or locomotive engines tested, is greater than any applicable emission standard or FEL, the engine family is deemed to be in non-compliance with applicable emission standards, and the manufacturer or remanufacturer must notify EPA within 2 working days of such noncompliance.

(e) Within 30 calendar days of the end of each quarter, each manufacturer or remanufacturer must submit to the Administrator a report which includes the following information:

(1) The location and description of the manufacturer's or remanufacturer's emission test facilities which were utilized to conduct testing reported pursuant to this section;

(2) Total production and sample size for each engine family;

(3) The applicable standards and/or FELs against which each engine family was tested;

(4) A description of the test locomotives or locomotive engines;

(5) For each test conducted:

(i) A description of the test locomotive or locomotive engine, including:

(A) Configuration and engine family identification;

(B) Year, make, and build date;

(C) Engine identification number;

(D) Number of megawatt-hours (or miles if applicable) of service accumulated on locomotive or locomotive engine prior to testing; and

(E) Description of green engine factor; how it is determined and how it is applied;

(ii) Location(s) where service accumulation was conducted and description of accumulation procedure and schedule, if applicable;

(iii) Test number, date, test procedure used, initial test results before and after rounding, and final test results for all production line emission tests conducted, whether valid or invalid, and the reason for invalidation of any test results, if applicable;

(iv) A complete description of any adjustment, modification, repair, preparation, maintenance, and testing which was performed on the test locomotive or locomotive engine, has not been reported pursuant to any other paragraph of this subpart, and will not be performed on other production locomotive or locomotive engines;

(v) Any other information the Administrator may request relevant to the determination whether the new locomotives or locomotive engines being manufactured or remanufactured by the manufacturer or remanufacturer do in fact conform with the regulations with respect to which the certificate of conformity was issued;

(6) For each failed locomotive or locomotive engine as defined in § 92.510(a), a description of the remedy and test results for all retests as required by § 92.512(g);

(7) The date of the end of the locomotive or locomotive engine manufacturer's model year production for each engine family tested; and

(8) The following signed statement and endorsement by an authorized representative of the manufacturer or remanufacturer:

This report is submitted pursuant to Sections 213 and 208 of the Clean Air Act. This production line testing program was conducted in complete conformance with all applicable regulations under 40 CFR part 92. No emission-related changes to production processes or quality control procedures for the engine family tested have been made during this production line testing program that affect locomotives or locomotive engines from the production line. All data and information reported herein is, to the best of (Company Name) knowledge, true and accurate. I am aware of the penalties associated with violations of the Clean Air Act and the regulations thereunder. (Authorized Company Representative.)

§ 92.509 Maintenance of records; submittal of information.

(a) The manufacturer or remanufacturer for any new locomotive or locomotive engine subject to any of the provisions of this subpart must establish, maintain, and retain the following adequately organized and indexed records:

(1) *General records.* A description of all equipment used to test engines in accordance with § 92.503. The equipment requirements in subpart B of this part apply to tests performed under this subpart.

(2) Individual records. These records pertain to each production line test or audit conducted pursuant to this subpart and include:

(i) The date, time, and location of each test or audit;

(ii) The method by which the green engine factor was calculated or the number of hours of service accumulated on the test locomotive or locomotive engine when the test began and ended;

(iii) The names of all supervisory personnel involved in the conduct of the production line test or audit;

(iv) A record and description of any adjustment, repair, preparation or modification performed on test locomotives or locomotive engines, giving the date, associated time, justification, name(s) of the authorizing personnel, and names of all supervisory personnel responsible for the conduct of the action;

(v) If applicable, the date the locomotive or locomotive engine was shipped from the assembly plant, associated storage facility or port facility, and the date the locomotive or locomotive engine was received at the testing facility;

(vi) A complete record of all emission tests or audits performed pursuant to this subpart (except tests performed directly by EPA), including all individual worksheets and/or other documentation relating to each test, or exact copies thereof, in accordance with the record requirements specified in subpart B of this part;

(vii) A brief description of any significant events during testing not otherwise described under this paragraph (a)(2) of this section , commencing with the test locomotive or locomotive engine selection process and including such extraordinary events as engine damage during shipment.

(3) The manufacturer or remanufacturer must establish, maintain and retain general records, pursuant to paragraph (a)(1) of this section, for each test cell that can be used to perform emission testing under this subpart.

(b) The manufacturer or remanufacturer must retain all records required to be maintained under this subpart for a period of eight (8) years after completion of all testing. Records may be retained as hard copy (i.e., on paper) or reduced to microfilm, floppy disk, or some other method of data storage, depending upon the manufacturer's or remanufacturer's record retention procedure; provided, that in every case, all the information contained in the hard copy is retained.

(c) The manufacturer or remanufacturer must, upon request by the Administrator, submit the following information with regard to locomotive or locomotive engine production:

(1) Projected production for each configuration within each engine family for which certification has been requested and/or approved.

(2) Number of locomotives or engines, by configuration and assembly plant, scheduled for production.

(d) Nothing in this section limits the Administrator's discretion to require a manufacturer or remanufacturer to establish, maintain, retain or submit to EPA information not specified by this section.

(e) All reports, submissions, notifications, and requests for approval made under this subpart must be addressed to: Group Manager, Engine Compliance Programs Group, Engine Programs and Compliance Division 6403-J, U.S. Environmental Protection Agency, 1200 Pennsylvania Ave, NW., Washington, DC 20460.

(f) The manufacturer or remanufacturer must electronically submit the results of its production line testing or auditing using an EPA information format.

§ 92.510 Compliance with criteria for production line testing.

(a) A failed locomotive or locomotive engine is one whose final test results pursuant to § 92.508(c), for one or more of the applicable pollutants, exceed the applicable emission standard or FEL.

(b) An engine family is deemed to be in noncompliance, for purposes of this subpart, if at any time throughout the model year, the average of an initial failed locomotive or locomotive engine and the two additional locomotives or locomotive engines tested, is greater than any applicable emission standard or FEL.

§ 92.511 Remanufactured locomotives: installation audit requirements.

(a) Remanufacturers of locomotives or locomotive engines shall audit the remanufacture of locomotives covered by its certificate(s) of conformity for proper components, component settings and component installations on randomly chosen locomotives in an engine family. Such audits shall be conducted in compliance with the requirements of this section.

(1) The remanufacturer must ensure that all emission related components are properly installed on the locomotive or locomotive engine.

(2) The remanufacturer must ensure that all emission related components are set to the proper specification as indicated in the remanufacture instructions.

(3) Remanufacturers are allowed to submit audits performed by the owners

or operators of the locomotives, provided the audits are performed in accordance with the provisions of this section.

(b)(1) The required initial sample size (i.e., the sample size if no failures occur) for each remanufacturer is five percent of the remanufacturer's annual sales per model year per installer, with a maximum number of ten per engine family per installer.

(2) The locomotives audited shall be randomly selected after the remanufacture is complete. The Administrator may allow the locomotives to be selected prior to the completion of the remanufacture, where such preselection would not have the potential to affect the manner in which the locomotive was remanufactured (e.g., where the installer is not aware of the selection prior to the completion of the remanufacture).

(c) The remanufactured locomotive or locomotive engine may accumulate no more than 10,000 miles prior to an audit.

(d) A failed remanufactured locomotive or locomotive engine is one on which any remanufacture components are found to be improperly installed, improperly adjusted or incorrectly used.

(e) If a remanufactured locomotive or locomotive engine fails an audit, then the remanufacturer must audit two additional locomotives or locomotive engines from the next ten remanufactured in that engine family by that installer.

(f) An engine family is determined to have failed an audit, if at any time during the model year, the remanufacturer determines that the three locomotives audited are found to have had any improperly installed, improperly adjusted or incorrectly used components. The remanufacturer must notify EPA within 2 working days of a determination of an engine family audit failure.

(g) Within 30 calendar days of the end of each quarter, each remanufacturer must submit to the Administrator a report which includes the following information:

(1) The location and description of the remanufacturer's audit facilities which were utilized to conduct auditing reported pursuant to this section;

(2) Total production and sample size for each engine family;

(3) The applicable standards and/or FELs against which each engine family was audited;

(4) For each audit conducted:

(i) A description of the audit locomotive or locomotive engine, including:

(A) Configuration and engine family identification;

(B) Year, make, build date, and remanufacturer date; and

(C) Engine identification number;

(ii) Any other information the Administrator may request relevant to the determination whether the new locomotives or locomotive engines being manufactured or remanufactured by the remanufacturer do in fact conform with the regulations in this part with respect to which the certificate of conformity was issued;

(5) For each failed locomotive or locomotive engine as defined in paragraph (d) of this section, a description of the remedy as required by § 92.512(g);

(6) The following signed statement and endorsement by an authorized representative of the remanufacturer:

This report is submitted pursuant to Sections 213 and 208 of the Clean Air Act. This production line auditing program was conducted in complete conformance with all applicable regulations under 40 CFR part 92. No emission-related changes to production processes or quality control procedures for the engine family audited have been made during this production line auditing program that affect locomotives or locomotive engines from the production line. All data and information reported herein is, to the best of (Company Name) knowledge, true and accurate. I am aware of the penalties associated with violations of the Clean Air Act and the regulations thereunder. (Authorized Company Representative.)

§ 92.512 Suspension and revocation of certificates of conformity.

(a)(1) The certificate of conformity is suspended with respect to any locomotive or locomotive engine that fails a production line test pursuant to § 92.510(a), effective from the time the testing of that locomotive or locomotive engine is completed.

(2) The certificate of conformity is suspended with respect to any locomotive or locomotive engine that fails

an audit pursuant to § 92.511(d), effective from the time that auditing of that locomotive or locomotive engine is completed.

(b)(1) The Administrator may suspend the certificate of conformity for an engine family which is in noncompliance pursuant to § 92.510(b), thirty days after the engine family is deemed to be in noncompliance.

(2) The Administrator may suspend the certificate of conformity for an engine family which is determined to have failed an audit pursuant to § 92.511(f). This suspension will not occur before thirty days after the engine family is deemed to be in noncompliance.

(c) If the results of testing or auditing pursuant to these regulations indicate that locomotives or engines of a particular family produced at one plant of a manufacturer or remanufacturer do not conform to the regulations with respect to which the certificate of conformity was issued, the Administrator may suspend the certificate of conformity with respect to that family for locomotives or locomotive engines manufactured or remanufactured by the manufacturer or remanufacturer at all other plants.

(d) The Administrator may suspend a certificate of conformity for any locomotive or locomotive engine family in whole or in part if:

(1) The manufacturer or remanufacturer fails to comply with any of the requirements of this subpart.

(2) The manufacturer or remanufacturer submits false or incomplete information in any report or information provided to the Administrator under this subpart.

(3) The manufacturer or remanufacturer renders inaccurate any test data submitted under this subpart.

(4) An EPA enforcement officer is denied the opportunity to conduct activities authorized in this subpart.

(5) An EPA enforcement officer is unable to conduct activities authorized in § 92.504 for any reason.

(e) The Administrator shall notify the manufacturer or remanufacturer in writing of any suspension or revocation of a certificate of conformity in whole or in part; a suspension or revocation is effective upon receipt of such notification or thirty days from the time an engine family is deemed to be in noncompliance under §§ 92.508(d), 92.510(a), 92.510(b) or 92.511(f) is made, whichever is earlier, except that the certificate is immediately suspended with respect to any failed locomotives or locomotive engines as provided for in paragraph (a) of this section.

(f) The Administrator may revoke a certificate of conformity for an engine family when the certificate has been suspended pursuant to paragraph (b) or (c) of this section if the remedy is one requiring a design change or changes to the locomotive, engine and/or emission control system as described in the application for certification of the affected engine family.

(g) Once a certificate has been suspended for a failed locomotive or locomotive engine, as provided for in paragraph (a) of this section, the manufacturer or remanufacturer must take the following actions before the certificate is reinstated for that failed locomotive or locomotive engine:

(1) Remedy the nonconformity;

(2) Demonstrate that the locomotive or locomotive engine conforms to applicable standards or family emission limits by retesting, or reauditing if applicable, the locomotive or locomotive engine in accordance with this part; and

(3) Submit a written report to the Administrator, after successful completion of testing, or auditing if applicable, on the failed locomotive or locomotive engine, which contains a description of the remedy and test (or audit) results for each locomotive or engine in addition to other information that may be required by this part.

(h) Once a certificate for a failed engine family has been suspended pursuant to paragraph (b) or (c) of this section, the manufacturer or remanufacturer must take the following actions before the Administrator will consider reinstating the certificate:

(1) Submit a written report to the Administrator which identifies the reason for the noncompliance of the locomotives or locomotive engines, describes the remedy, including a description of any quality control and/or quality assurance measures to be taken

by the manufacturer or remanufacturer to prevent future occurrences of the problem, and states the date on which the remedies will be implemented.

(2) Demonstrate that the engine family for which the certificate of conformity has been suspended does in fact comply with the regulations of this part by testing, or auditing if applicable, locomotives or engines selected from normal production runs of that engine family. Such testing (or auditing) must comply with the provisions of this subpart. If the manufacturer or remanufacturer elects to continue testing, or auditing if applicable, individual locomotives or engines after suspension of a certificate, the certificate is reinstated for any locomotive or engine actually determined to be in conformance with the applicable standards or family emission limits through testing, or auditing if applicable, in accordance with the applicable test procedures, provided that the Administrator has not revoked the certificate pursuant to paragraph (f) of this section.

(i) Once the certificate has been revoked for an engine family, if the manufacturer or remanufacturer desires to continue introduction into commerce of a modified version of that family, the following actions must be taken before the Administrator may issue a certificate for that modified family:

(1) If the Administrator determines that the change(s) in locomotive or engine design may have an effect on emission performance deterioration, the Administrator shall notify the manufacturer or remanufacturer, within five working days after receipt of the report in paragraph (g) of this section, whether subsequent testing or auditing if applicable, under this subpart will be sufficient to evaluate the change or changes or whether additional testing or auditing will be required; and

(2) After implementing the change or changes intended to remedy the nonconformity, the manufacturer or remanufacturer must demonstrate that the modified engine family does in fact conform with the regulations of this part by testing, or auditing if applicable, locomotives or engines selected from normal production runs of that engine family. When both of these requirements are met, the Administrator shall reissue the certificate or issue a new certificate, as the case may be, to include that family. If this subsequent testing, or auditing if applicable, reveals failing data the revocation remains in effect.

(j) At any time subsequent to an initial suspension of a certificate of conformity for a test or audit locomotive or engine pursuant to paragraph (a) of this section, but not later than 30 days (or such other period as may be allowed by the Administrator) after notification of the Administrator's decision to suspend or revoke a certificate of conformity in whole or in part pursuant to paragraphs (b), (c), or (f) of this section, a manufacturer or remanufacturer may request a hearing as to whether the tests or audits have been properly conducted or any sampling methods have been properly applied.

(k) Any suspension of a certificate of conformity under paragraphs (a), (b), (c) and (d) of this section:

(1) Shall be made only after the manufacturer or remanufacturer concerned has been offered an opportunity for a hearing conducted in accordance with §§92.513, 92.514, and 92.515 and

(2) Need not apply to locomotives or engines no longer in the possession of the manufacturer or remanufacturer.

(l) After the Administrator suspends or revokes a certificate of conformity pursuant to this section or voids a certificate of conformity under §92.215, and prior to the commencement of a hearing under §92.513, if the manufacturer or remanufacturer demonstrates to the Administrator's satisfaction that the decision to suspend, revoke, or void the certificate was based on erroneous information, the Administrator shall reinstate the certificate.

(m) To permit a manufacturer or remanufacturer to avoid storing non-test locomotives or locomotive engines while conducting subsequent testing or auditing of the noncomplying family, a manufacturer or remanufacturer may request that the Administrator conditionally reinstate the certificate for that family. The Administrator may reinstate the certificate subject to the following condition: the manufacturer

or remanufacturer must commit to recall all locomotives or locomotive engines of that family produced from the time the certificate is conditionally reinstated if the family fails subsequent testing, or auditing if applicable, and must commit to remedy any nonconformity at no expense to the owner.

§ 92.513 Request for public hearing.

(a) If the manufacturer or remanufacturer disagrees with the Administrator's decision to suspend or revoke a certificate or disputes the basis for an automatic suspension pursuant to § 92.512(a), the manufacturer or remanufacturer may request a public hearing.

(b) The manufacturer's or remanufacturer's request shall be filed with the Administrator not later than 30 days after the Administrator's notification of his or her decision to suspend or revoke, unless otherwise specified by the Administrator. The manufacturer or remanufacturer shall simultaneously serve two copies of this request upon the Director of the Engine Programs and Compliance Division, Office of Mobile Sources and file two copies with the Hearing Clerk of the Agency. Failure of the manufacturer or remanufacturer to request a hearing within the time provided constitutes a waiver of the right to a hearing. Subsequent to the expiration of the period for requesting a hearing as of right, the Administrator may, in his or her discretion and for good cause shown, grant the manufacturer or remanufacturer a hearing to contest the suspension or revocation.

(c) A manufacturer or remanufacturer shall include in the request for a public hearing:

(1) A statement as to which configuration(s) within a family is to be the subject of the hearing;

(2) A concise statement of the issues to be raised by the manufacturer or remanufacturer at the hearing, except that in the case of the hearing requested under § 92.512(j), the hearing is restricted to the following issues:

(i) Whether tests or audits have been properly conducted (specifically, whether the tests were conducted in accordance with applicable regulations under this part and whether test equipment was properly calibrated and functioning);

(ii) Whether there exists a basis for distinguishing locomotives or locomotive engines produced at plants other than the one from which locomotives or locomotive engines were selected for testing or auditing which would invalidate the Administrator's decision under § 92.512(c));

(3) A statement specifying reasons why the manufacturer or remanufacturer believes it will prevail on the merits of each of the issues raised; and

(4) A summary of the evidence which supports the manufacturer's or remanufacturer's position on each of the issues raised.

(d) A copy of all requests for public hearings will be kept on file in the Office of the Hearing Clerk and will be made available to the public during Agency business hours.

§ 92.514 Administrative procedures for public hearing.

(a) The Presiding Officer shall be an Administrative Law Judge appointed pursuant to 5 U.S.C. 3105 (see also 5 CFR part 930).

(b) The Judicial Officer shall be an officer or employee of the Agency appointed as a Judicial Officer by the Administrator, pursuant to this section, who shall meet the qualifications and perform functions as follows:

(1) *Qualifications.* A Judicial Officer may be a permanent or temporary employee of the Agency who performs other duties for the Agency. The Judicial Officer shall not be employed by the Office of Enforcement or have any connection with the preparation or presentation of evidence for a hearing held pursuant to this subpart. The Judicial Officer shall be a graduate of an accredited law school and a member in good standing of a recognized Bar Association of any state or the District of Columbia.

(2) *Functions.* The Administrator may consult with the Judicial Officer or delegate all or part of the Administrator's authority to act in a given case under this section to a Judicial Officer, provided that this delegation does not preclude the Judicial Officer from referring any motion or case to the Administrator when the Judicial Officer

determines such referral to be appropriate.

(c) For the purposes of this section, one or more Judicial Officers may be designated by the Administrator. As work requires, a Judicial Officer may be designated to act for the purposes of a particular case.

(d) *Summary decision.* (1) In the case of a hearing requested under § 92.512(j), when it clearly appears from the data and other information contained in the request for a hearing that no genuine and substantial question of fact or law exists with respect to the issues specified in § 92.513(c)(2), the Administrator may enter an order denying the request for a hearing and reaffirming the original decision to suspend or revoke a certificate of conformity.

(2) In the case of a hearing requested under § 92.513 to challenge a suspension of a certificate of conformity for the reason(s) specified in § 92.512(d), when it clearly appears from the data and other information contained in the request for the hearing that no genuine and substantial question of fact or law exists with respect to the issue of whether the refusal to comply with this subpart was caused by conditions and circumstances outside the control of the manufacturer or remanufacturer, the Administrator may enter an order denying the request for a hearing and suspending the certificate of conformity.

(3) Any order issued under paragraph (d)(1) or (d)(2) of this section has the force and effect of a final decision of the Administrator, as issued pursuant to § 92.516.

(4) If the Administrator determines that a genuine and substantial question of fact or law does exist with respect to any of the issues referred to in paragraphs (d)(1) and (d)(2) of this section, the Administrator shall grant the request for a hearing and publish a notice of public hearing in the FEDERAL REGISTER or by such other means as the Administrator finds appropriate to provide notice to the public.

(e) *Filing and service.* (1) An original and two copies of all documents or papers required or permitted to be filed pursuant to this section and § 92.513(c) must be filed with the Hearing Clerk of the Agency. Filing is considered timely if mailed, as determined by the postmark, to the Hearing Clerk within the time allowed by this section and § 92.513(b). If filing is to be accomplished by mailing, the documents must be sent to the address set forth in the notice of public hearing referred to in paragraph (d)(4) of this section.

(2) To the maximum extent possible, testimony will be presented in written form. Copies of written testimony will be served upon all parties as soon as practicable prior to the start of the hearing. A certificate of service will be provided on or accompany each document or paper filed with the Hearing Clerk. Documents to be served upon the Director of the Engine Programs and Compliance Division must be sent by registered mail to: Director, Engine Programs and Compliance Division 6403–J, U.S. Environmental Protection Agency, 1200 Pennsylvania Ave., NW., Washington, DC 20460. Service by registered mail is complete upon mailing.

(f) *Computation of time.* (1) In computing any period of time prescribed or allowed by this section, except as otherwise provided, the day of the act or event from which the designated period of time begins to run is not included. Saturdays, Sundays, and federal legal holidays are included in computing the period allowed for the filing of any document or paper, except that when the period expires on a Saturday, Sunday, or federal legal holiday, the period is extended to include the next following business day.

(2) A prescribed period of time within which a party is required or permitted to do an act is computed from the time of service, except that when service is accomplished by mail, three days will be added to the prescribed period.

(g) *Consolidation.* The Administrator or the Presiding Officer in his or her discretion may consolidate two or more proceedings to be held under this section for the purpose of resolving one or more issues whenever it appears that consolidation will expedite or simplify consideration of these issues. Consolidation does not affect the right of any party to raise issues that could have been raised if consolidation had not occurred.

(h) *Hearing date.* To the extent possible hearings under § 92.513 will be

scheduled to commence within 14 days of receipt of the request for a hearing.

§ 92.515 Hearing procedures.

The procedures provided in § 86.1014–84(i) through (s) of this chapter apply for hearings requested pursuant to § 92.513 regarding suspension, revocation, or voiding of a certificate of conformity.

§ 92.516 Appeal of hearing decision.

The procedures provided in § 86.1014–84(t) through (aa) of this chapter apply for appeals filed with respect to hearings held pursuant to § 92.515.

§ 92.517 Treatment of confidential information.

Except for information required by § 92.508(e)(2) and quarterly emission test results described in § 92.508(e), information submitted pursuant to this subpart shall be made available to the public by EPA notwithstanding any claim of confidentiality made by the submitter. The provisions for treatment of confidential information described in § 92.4 apply to the information required by § 92.508(e)(2) and all other information submitted pursuant to this subpart.

Subpart G—In-Use Testing Program

§ 92.601 Applicability.

The requirements of this subpart are applicable to all manufacturers and remanufacturers of locomotives subject to the provisions of subpart A of this part, including all locomotives powered by any locomotive engines subject to the provisions of subpart A of this part.

§ 92.602 Definitions.

Except as otherwise provided, the definitions in subpart A of this part apply to this subpart.

§ 92.603 General provisions.

(a) EPA shall annually identify engine families and configurations within families on which the manufacturer or remanufacturer must conduct in-use emissions testing pursuant to the requirements of this section.

(1) Manufacturers and remanufacturers shall test one locomotive engine family each year for which it has received a certificate of conformity from EPA. Where a manufacturer holds certificates of conformity for both freshly manufactured and remanufactured locomotive engine families, the Administrator may require the manufacturer to test one freshly manufactured engine family and one remanufactured engine family. The Administrator may require a manufacturer or remanufacturer to test additional engine families if he/she has reason to believe that locomotives in an engine family do not comply with emission standards in use.

(2) For engine families of less than 10 locomotives per year, no in-use testing will be required, unless the Administrator has reason to believe that those engine families are not complying with the applicable emission standards in use.

(b) Locomotive manufacturers or remanufacturers shall perform emission testing of a sample of in-use locomotives from an engine family, as specified in § 92.605. Manufacturers or remanufacturers shall submit data from this in-use testing to EPA. EPA will use these data, and any other data available to EPA, to determine the compliance status of classes of locomotives, including for purposes of subpart H of this part, and whether remedial action is appropriate.

§ 92.604 In-use test procedure.

(a) Testing conducted under this subpart shall be conducted on locomotives; testing under this subpart shall not be conducted using an engine that is not installed in a locomotive at the time of testing.

(b) Locomotives tested under this subpart shall be tested using the locomotive test procedures outlined in subpart B of this part, except as provided in this section.

(c) The test procedures used for in-use testing shall be consistent with the test procedures used for certification, except for cases in which certification testing was not conducted with locomotive, but with a development engine, or other engine. In such cases, the Administrator shall require deviations from the certification test procedures

as appropriate, including requiring that the test be conducted on a locomotive. The Administrator may allow or require other alternate procedures, with advance approval. For all testing conducted under this subpart, emission rates shall be calculated in accordance with the provisions of subpart B of this part that apply to locomotive testing.

(d) Any adjustable locomotive or locomotive engine parameter must be set to values or positions that are within the range specified in the certificate of conformity. If so directed by the Administrator, the manufacturer or remanufacturer will set these parameters to values specified by the Administrator.

(e) The Administrator may waive portions or requirements of the applicable test procedure, if any, that are not necessary to determine in-use compliance.

§ 92.605 General testing requirements.

(a) *Number of locomotives to be tested.* The manufacturer or remanufacturer shall test in-use locomotives, from an engine family selected by EPA, which have accumulated between one-half and three-quarters of the engine family's useful life. The number of locomotives to be tested by a manufacturer or remanufacturer will be determined by the following method:

(1) A minimum of 2 locomotives per engine family per year for each engine family that reaches the minimum age specified above provided that no locomotive tested fails to meet any applicable standard. For each failing locomotive, two more locomotives shall be tested until the total number of locomotives tested equals 10, except as provided in paragraph (a)(2) of this section.

(2) If an engine family has not changed from one year to the next and has certified using carry over emission data and has been previously tested under paragraph (a)(1) of this section (and EPA has not ordered or begun to negotiate remedial action of that family), then only one locomotive per engine family per year must be tested. If such locomotive fails to meet applicable standards for any pollutant, testing for that engine family must be conducted as outlined under paragraph (a)(1) of this section.

(b) At the discretion of the Administrator, a locomotive or locomotive engine manufacturer or remanufacturer may test more locomotives than the minima described above or may concede failure before locomotive number 10.

(c) The Administrator will consider failure rates, average emission levels and the existence of any defects among other factors in determining whether to pursue remedial action. The Administrator may order a recall pursuant to subpart H of this part before testing reaches the tenth locomotive.

(d) *Collection of in-use locomotives.* The locomotive manufacturer or remanufacturer shall procure in-use locomotives which have been operated for between one-half and three-quarters of the locomotive's useful life for testing under this subpart. The manufacturer or remanufacturer shall complete testing required by this section for any engine family before useful life of the locomotives in the engine family passes.

§ 92.606 Maintenance, procurement and testing of in-use locomotives.

(a) A test locomotive must have a maintenance history that is representative of actual in-use conditions, and identical or equivalent to the manufacturer's or remanufacturer's recommended emission-related maintenance requirements.

(1) In procuring in-use locomotives for in-use testing, a manufacturer or remanufacturer shall question the end users regarding the accumulated usage, maintenance, operating conditions, and storage of the test locomotives.

(2) The selection of test locomotives is made by the manufacturer or remanufacturer, and is subject to EPA approval. Information used by the manufacturer or remanufacturer to procure locomotives for in-use testing shall be maintained as required in § 92.215.

(b) The manufacturer or remanufacturer may perform minimal set-to-spec maintenance on a test locomotive prior to conducting in-use testing. Maintenance may include only that which is listed in the owner's instructions for locomotives with the amount of service

and age of the acquired test locomotive. Documentation of all maintenance and adjustments shall be maintained and retained.

(c) Results of one valid emission test using the test procedure outlined in subpart B of this part is required for each in-use locomotive.

(d) If in-use testing results show that an in-use locomotive fails to comply with any applicable emission standards, the manufacturer or remanufacturer shall determine the reason for noncompliance. The manufacturer or remanufacturer must report all determinations for noncompliance in its quarterly in-use test result report pursuant to § 92.607(a)(11).

EFFECTIVE DATE NOTE: At 63 FR 19066, Apr. 16, 1998, § 92.606 was added. This section contains information collection and recordkeeping requirements and will not become effective until approval has been given by the Office of Management and Budget.

§ 92.607 In-use test program reporting requirements.

(a) The manufacturer or remanufacturer shall submit to the Administrator within three (3) months of completion of testing all emission testing results generated from the in-use testing program. The following information must be reported for each locomotive tested:

(1) Engine family, and configuration;

(2) Locomotive and engine models;

(3) Locomotive and engine serial numbers;

(4) Date of manufacture and/or remanufacture(s), as applicable;

(5) Megawatt-hours of use (or miles, as applicable);

(6) Date and time of each test attempt;

(7) Results (if any) of each test attempt;

(8) Results of all emission testing;

(9) Summary of all maintenance and/or adjustments performed;

(10) Summary of all modifications and/or repairs;

(11) Determinations of noncompliance; and

(12) The following signed statement and endorsement by an authorized representative of the manufacturer or remanufacturer:

This report is submitted pursuant to Sections 213 and 208 of the Clean Air Act. This in-use testing program was conducted in complete conformance with all applicable regulations under 40 CFR part 92. All data and information reported herein is, to the best of (Company Name) knowledge, true and accurate. I am aware of the penalties associated with violations of the Clean Air Act and the regulations thereunder. (Authorized Company Representative.)

(b) The manufacturer or remanufacturer shall report to the Administrator within three (3) months of completion of testing the following information for each engine family tested:

(1) The serial numbers of all locomotive that were excluded from the test sample because they did not meet the maintenance requirements of § 92.606;

(2) The owner of each locomotive identified in paragraph (b)(1) of this section (or other entity responsible for the maintenance of the locomotive); and

(3) The specific reasons why the locomotives were excluded from the test sample.

(c) The manufacturer or remanufacturer must submit, via floppy disk, the information outlined in paragraphs (a) and (b) of this section using a pre-approved information heading. The Administrator may exempt manufacturers or remanufacturers from this requirement upon written request with supporting justification.

(d) All testing reports and requests for approvals made under this subpart shall be addressed to: Group Manager, Engine Compliance Programs Group, Engine Programs and Compliance Division, U.S. Environmental Protection Agency, 6403–J, 1200 Pennsylvania Ave., NW., Washington, DC 20460.

Subpart H—Recall Regulations

§ 92.701 Applicability.

The requirements of subpart H of this part are applicable to all manufacturers and remanufacturers of locomotives and locomotive engines subject to the provisions of subpart A of this part.

§ 92.702 Definitions.

The definitions of subpart A of this part apply to this subpart.

§ 92.703 Voluntary emissions recall.

(a) Prior to an EPA ordered recall, a manufacturer or remanufacturer may perform (without petition) a voluntary emissions recall pursuant to regulations in subpart E of this part. Such manufacturer or remanufacturer is subject to the reporting requirements in subpart E of this part.

(b) If a determination of nonconformity with the requirements of section 213 of the Act is made (i.e. if EPA orders a recall under the provisions of section 207(c)), the manufacturer(s) or remanufacturer(s) will not have the option of an alternate remedial action and an actual recall would be required.

§ 92.704 Notice to manufacturer or remanufacturer of nonconformity; submission of remedial plan.

(a) The manufacturer or remanufacturer will be notified whenever the Administrator has determined that a substantial number of a class or category of locomotives or locomotive engines produced by that manufacturer or remanufacturer, although properly maintained and used, do not conform to the regulations prescribed under the Act in effect during, and applicable to the model year of such locomotives or locomotive engines. The notification will include a description of each class or category of locomotives or locomotive engines encompassed by the determination of nonconformity, will give the factual basis for the determination of nonconformity (except information previously provided the manufacturer or remanufacturer by the Agency), and will designate a date, no sooner than 45 days from the date of receipt of such notification, by which the manufacturer or remanufacturer shall have submitted a plan to remedy the nonconformity.

(b) Unless a hearing is requested pursuant to § 92.709, the remedial plan shall be submitted to the Administrator within the time limit specified in the Administrator's notification, provided that the Administrator may grant a manufacturer or remanufacturer an extension upon good cause shown.

(c) If a manufacturer or remanufacturer requests a public hearing pursuant to § 92.709, unless as a result of such hearing the Administrator withdraws his determination of nonconformity, the manufacturer or remanufacturer shall submit the remedial plan within 30 days of the end of such hearing.

§ 92.705 Remedial plan.

(a) When any manufacturer or remanufacturer is notified by the Administrator that a substantial number of any class or category of locomotives or locomotive engines, although properly maintained and used, do not conform to the applicable regulations of this part (including emission standards or family emission limits), the manufacturer or remanufacturer shall submit a plan to the Administrator to remedy such nonconformity. The plan shall contain the following:

(1) A description of each class or category of locomotive or locomotive engine to be recalled including the year(s) of manufacture or remanufacture, the make, the model, the calendar year and such other information as may be required to identify the locomotives or locomotive engines to be recalled.

(2) A description of the specific modifications, alterations, repairs, corrections, adjustments or other changes to be made to bring the locomotives or locomotive engines into conformity, including a brief summary of the data and technical studies which support the manufacturer's or remanufacturer's decision as to the particular remedial changes to be used in correcting the nonconformity.

(3) A description of the method by which the manufacturer or remanufacturer will determine the names and addresses of locomotive or locomotive engine owners.

(4) A description of the proper maintenance or use, if any, upon which the manufacturer or remanufacturer conditions eligibility for repair under the remedial plan, an explanation of the manufacturer's or remanufacturer's reasons for imposing any such condition, and a description of the proof to be required of a locomotive or locomotive engine owner to demonstrate compliance with any such condition. Eligibility may not be denied solely on the basis that the locomotive or locomotive engine owner used parts not

manufactured or remanufactured by the original locomotive or locomotive engine manufacturer or remanufacturer, or had repairs not performed by such manufacturer or remanufacturer. No maintenance or use condition may be imposed unless it is, in the judgement of the Administrator, demonstrably related to preventing the nonconformity.

(5) A description of the procedure to be followed by locomotive or locomotive engine owners to obtain correction of the nonconformity. This shall include designation of the date on or after which the owner can have the nonconformity remedied, the time reasonably necessary to perform the labor required to correct the nonconformity, and the designation of facilities at which the nonconformity can be remedied: *Provided,* That repair shall be completed within a reasonable time designated by the Administrator from the date the owner first tenders his locomotive or locomotive engine after the date designated by the manufacturer or remanufacturer as the date on or after which the owner can have the nonconformity remedied.

(6) If some or all of the nonconforming locomotives or locomotive engines are to be remedied by persons other than authorized warranty agents of the manufacturer or remanufacturer, a description of the class of persons other than authorized warranty agents of the manufacturer or remanufacturer who will remedy the nonconformity, and a statement indicating that the participating members of the class will be properly equipped to perform such remedial action.

(7) Three copies of the letters of notification to be sent to locomotive or locomotive engine owners.

(8) A description of the system by which the manufacturer or remanufacturer will assure that an adequate supply of parts will be available to perform the repair under the remedial plan including the date by which an adequate supply of parts will be available to initiate the repair campaign, the percentage of the total parts requirement of each person who is to perform the repair under the remedial plan to be shipped to initiate the campaign, and the method to be used to assure the supply remains both adequate and responsive to owner demand.

(9) Three copies of all necessary instructions to be sent to those persons who are to perform the repair under the remedial plan.

(10) A description of the impact of the changes on fuel consumption, operability, and safety of each class or category of locomotives or locomotive engines to be recalled and a brief summary of the data, technical studies, or engineering evaluations which support these conclusions.

(11) Any other information, reports or data which the Administrator may reasonably determine is necessary to evaluate the remedial plan.

(b)(1) Notification to locomotive or locomotive engine owners shall be made by first class mail or by such means as approved by the Administrator.

(2) The manufacturer or remanufacturer shall use all reasonable means necessary to locate locomotive or locomotive engine owners.

(3) The Administrator reserves the right to require the manufacturer or remanufacturer to send by certified mail or other reasonable means subsequent notification to locomotive or locomotive engine owners.

(c)(1) The manufacturer or remanufacturer shall require those who perform the repair under the remedial plan to affix a label to each locomotive or locomotive engine repaired or, when required, inspected under the remedial plan.

(2) The label shall be placed in such location as approved by the Administrator consistent with Federal Railroad Administration regulations and shall be fabricated of a material suitable for the location in which it is installed and which is not readily removable intact.

(3) The label shall contain:

(i) The recall campaign number; and

(ii) A code designating the campaign facility at which the repair, or inspection for repair was performed.

(4) The Administrator reserves the right to waive any or all of the requirements of this paragraph (c) if he/she determines that they constitute an unwarranted burden to the manufacturer or remanufacturer.

(d) The Administrator may require the manufacturer or remanufacturer to conduct tests on components and locomotives or locomotive engines incorporating a change, repair, or modification reasonably designed and necessary to demonstrate the effectiveness of the change, repair, or modification.

NOTE TO § 92.705: An interpretive ruling regarding § 92.705 is published in Appendix II to this part.

§ 92.706 Approval of plan: Implementation.

(a) If the Administrator finds that the remedial plan is designed and effective to correct the nonconformity, he/she will so notify the manufacturer or remanufacturer in writing. If the remedial plan is not approved, the Administrator will provide the manufacturer or remanufacturer notice of the disapproval and the reasons for the disapproval in writing.

(b) Upon receipt of notice from the Administrator that the remedial plan has been approved, the manufacturer or remanufacturer shall commence implementation of the approved plan. Notification of locomotive or locomotive engine owners shall be in accordance with requirements of this subpart and shall proceed as follows:

(1) When no public hearing as described in § 92.709 is requested by the manufacturer or remanufacturer, notification of locomotive or locomotive engine owners shall commence within 15 working days of the receipt by the manufacturer or remanufacturer of the Administrator's approval unless otherwise specified by the Administrator.

(2) When a public hearing as described in § 92.709 is held, unless as a result of such hearing the Administrator withdraws the determination of nonconformity, the Administrator shall, within 60 days after the completion of such hearing, order the manufacturer or remanufacturer to provide prompt notification of such nonconformity.

§ 92.707 Notification to locomotive or locomotive engine owners.

(a) The notification of locomotive or locomotive engine owners shall contain the following:

(1) The statement: ''The Administrator of the U.S. Environmental Protection Agency has determined that your locomotive or locomotive engine may be emitting pollutants in excess of the federal emission standards or family emission limits, as defined in 40 CFR part 92. These standards or family emission limits, as defined in 40 CFR part 92 were established to protect the public health or welfare from the dangers of air pollution.''

(2) A statement that the nonconformity of any such locomotives or locomotive engines which have been, if required by the remedial plan, properly maintained and used, will be remedied at the expense of the manufacturer or remanufacturer.

(3) A description of the proper maintenance or use, if any, upon which the manufacturer or remanufacturer conditions eligibility for repair under the remedial plan and a description of the proof to be required of a locomotive or locomotive engine owner to demonstrate compliance with such condition. Eligibility may not be denied solely on the basis that the locomotive or locomotive engine owner used parts not manufactured or remanufactured by the manufacturer or remanufacturer, or had repairs not performed by the manufacturer or remanufacturer.

(4) A clear description of the components which will be affected by the remedy and a general statement of the measures to be taken to correct the nonconformity.

(5) A description of the adverse effects, if any, that an uncorrected nonconformity would have on the performance or operability of the locomotive or locomotive engine.

(6) A description of the adverse effects, if any, that such nonconformity would have on the performance or operability of the locomotive or locomotive engine.

(7) A description of the average effects, if any, that such nonconformity would have on the functions of other locomotive or locomotive engine components.

(8) A description of the procedure which the locomotive or locomotive engine owner should follow to obtain correction of the nonconformity. This shall include designation of the date on or after which the owner can have the

nonconformity remedied, the time reasonably necessary to perform the labor required to correct the nonconformity, and the designation of facilities at which the nonconformity can be remedied.

(9) A telephone number provided by the manufacturer or remanufacturer, which may be used to report difficulty in obtaining recall repairs.

(10) The statement: ''In order to ensure your full protection under the emission warranty made applicable to your (locomotive or locomotive engine) by federal law, and your right to participate in future recalls, it is recommended that you have (locomotive or locomotive engine) serviced as soon as possible. Failure to do so could legally be determined to be a lack of proper maintenance of your (locomotive or locomotive engine).''

(b) No notice sent pursuant to paragraph (a) of this section nor any other contemporaneous communication sent to locomotive or locomotive engine owners or dealers shall contain any statement or implication that the nonconformity does not exist or that the nonconformity will not degrade air quality.

(c) The manufacturer or remanufacturer shall be informed of any other requirements pertaining to the notification under this section which the Administrator has determined are reasonable and necessary to ensure the effectiveness of the recall campaign.

§ 92.708 Records and reports.

(a) The manufacturer or remanufacturer shall provide to the Administrator a copy of all communications which relate to the remedial plan directed to persons who are to perform the repair under the remedial plan. Such copies shall be mailed to the Administrator contemporaneously with their transmission to persons who are to perform the repair under the remedial plan.

(b) The manufacturer or remanufacturer shall provide for the establishment and maintenance of records to enable the Administrator to conduct a continuing analysis of the adequacy of the recall campaign. The records shall include, for each class or category of locomotive or locomotive engine, but need not be limited to, the following:

(1) Recall campaign number as designated by the manufacturer or remanufacturer.

(2) Date owner notification was begun, and date completed.

(3) Number of locomotives or locomotive engines involved in the recall campaign.

(4) Number of locomotives or locomotive engines known or estimated to be affected by the nonconformity.

(5) Number of locomotives or locomotive engines inspected pursuant to the remedial plan.

(6) Number of inspected locomotives or locomotive engines found to be affected by the nonconformity.

(7) Number of locomotives or locomotive engines actually receiving repair under the remedial plan.

(8) Number of locomotives or locomotive engines determined to be unavailable for inspection or repair under the remedial plan due to exportation, scrapping or for other reasons (specify).

(9) Number of locomotives or locomotive engines determined to be ineligible for remedial action due to a failure to properly maintain or use such locomotives or locomotive engines.

(c) If the manufacturer or remanufacturer determines that the original answers for paragraphs (b)(3) and (b)(4) of this section are incorrect, revised figures and an explanatory note shall be submitted. Answers to paragraphs (b)(5), (b)(6), (b)(7), (b)(8), and (b)(9) of this section shall be cumulative totals.

(d) Unless otherwise directed by the Administrator, the information specified in paragraph (b) of this section shall be included in quarterly reports, with respect to each recall campaign, for six consecutive quarters beginning with the quarter in which the notification of owners was initiated, or until all nonconforming locomotives or locomotive engines involved in the campaign have been remedied, whichever occurs sooner. Such reports shall be submitted no later than 25 working days after the close of each calendar quarter.

(e) The manufacturer or remanufacturer shall maintain in a form suitable for inspection, such as computer information storage devices or card files,

lists of the names and addresses of locomotive or locomotive engine owners:

(1) To whom notification was given;

(2) Who received remedial repair or inspection under the remedial plan; and

(3) When eligibility for repair is conditioned on proper maintenance or use, that were determined not to qualify for such remedial action.

(f) The records described in paragraph (e) of this section shall be made available to the Administrator upon request.

(g) The records and reports required by this section shall be retained for not less than eight (8) years.

EFFECTIVE DATE NOTE: At 63 FR 19069, Apr. 16, 1998, § 92.708 was added. This section contains information collection and recordkeeping requirements and will not become effective until approval has been given by the Office of Management and Budget.

§ 92.709 Public hearings.

(a) *Definitions.* The following definitions shall be applicable to this section:

(1) *Hearing Clerk* shall mean the Hearing Clerk of the Environmental Protection Agency.

(2) *Intervenor* shall mean a person who files a petition to be made an intervenor pursuant to paragraph (g) of this section and whose petition is approved.

(3) *Manufacturer or remanufacturer* refers to a manufacturer or remanufacturer contesting a recall order directed at that manufacturer or remanufacturer.

(4) *Party* shall include the Environmental Protection Agency, the manufacturer or remanufacturer, and any intervenors.

(5) *Presiding Officer* shall mean an Administrative Law Judge appointed pursuant to 5 U.S.C. 3105 (see also 5 CFR part 930).

(6) *Environmental Appeals Board* shall mean the Board within the Agency described in § 1.25 of this chapter. The Administrator delegates authority to the Environmental Appeals Board to issue final decisions in appeals filed under this subpart. Appeals directed to the Administrator, rather than to the Environmental Appeals Board, will not be considered. This delegation of authority to the Environmental Appeals Board does not preclude the Environmental Appeals Board from referring an appeal or a motion filed under this subpart to the Administrator for decision when the Environmental Appeals Board, in its discretion, deems it appropriate to do so. When an appeal or motion is referred to the Administrator, all parties shall be so notified and the rules in this part referring to the Environmental Appeals Board shall be interpreted as referring to the Administrator.

(b) *Request for public hearing.* (1)(i) If the manufacturer or remanufacturer disagrees with the Administrator's finding of nonconformity he may request a public hearing as described in this section. Requests for such a hearing shall be filed with the Administrator not later than 45 days after the receipt of the Administrator's notification of nonconformity unless otherwise specified by the Administrator. Two copies of such request shall simultaneously be served upon the Director of the Engine Programs and Compliance Division and two copies filed with the Hearing Clerk. Failure of the manufacturer or remanufacturer to request a hearing within the time provided shall constitute a waiver of his right to such a hearing. In such a case, the manufacturer or remanufacturer shall carry out the recall order as required by § 92.705.

(ii) Subsequent to the expiration of the period for requesting a hearing as of right, the Administrator may, in his discretion and for good cause shown, grant the manufacturer or remanufacturer a hearing to contest the nonconformity.

(2) The request for a public hearing shall contain:

(i) A statement as to which classes or categories of locomotives or locomotive engines are to be the subject of the hearing;

(ii) A concise statement of the issues to be raised by the manufacturer or remanufacturer at the hearing for each class or category of locomotive or locomotive engine for which the manufacturer or remanufacturer has requested the hearing; and

(iii) A statement as to reasons the manufacturer or remanufacturer believes it will prevail on the merits on each of the issues so raised.

(3) A copy of all requests for public hearings shall be kept on file in the Office of the Hearing Clerk and shall be made available to the public during Agency business hours.

(c) *Filing and service.* (1) An original and two copies of all documents or papers required or permitted to be filed pursuant to this section shall be filed with the Hearing Clerk. Filing shall be deemed timely if mailed, as determined by the postmark, to the Hearing Clerk within the time allowed by this section. If filing is to be accomplished by mailing, the documents shall be sent to the address set forth in the notice of public hearing as described in paragraph (f) of this section.

(2) Except for requests to commence a hearing, at the same time a party files with the Hearing Clerk any additional issues for consideration at the hearing or any written testimony, documents, papers, exhibits, or materials, to be introduced into evidence or papers filed in connection with any appeal, it shall serve upon all other parties copies thereof. A certificate of service shall be provided on or accompany each document or paper filed with the Hearing Clerk. Documents to be served upon the Director of the Engine Programs and Compliance Division shall be mailed to: Director, Engine Programs and Compliance Division 6403–J, U.S. Environmental Protection Agency, 1200 Pennsylvania Ave., NW., Washington, DC 20460. Service by mail is complete upon mailing.

(d) *Time.* (1) In computing any period of time prescribed or allowed by this section, except as otherwise provided, the day of the act or event from which the designated period of time begins to run shall not be included. Saturdays, Sundays, and Federal legal holidays shall be included in computing any such period allowed for the filing of any document or paper, except that when such period expires on a Saturday, Sunday, or Federal legal holiday, such period shall be extended to include the next following business day.

(2) A prescribed period of time within which a party is required or permitted to do an act shall be computed from the time of service, except that when service is accomplished by mail, three days shall be added to the prescribed period.

(e) *Consolidation.* The Administrator or the Presiding Officer in his discretion may consolidate two or more proceedings to be held under this section for the purpose of resolving one or more issues whenever it appears that such consolidation will expedite or simplify consideration of such issues. Consolidation shall not affect the right of any party to raise issues that could have been raised if consolidation had not occurred.

(f) *Notice of public hearings.* (1) Notice of a public hearing under this section shall be given by publication in the FEDERAL REGISTER. Notice will be given at least 30 days prior to the commencement of such hearings.

(2) The notice of a public hearing shall include the following information:

(i) The purpose of the hearing and the legal authority under which the hearing is to be held;

(ii) A brief summary of the Administrator's determination of nonconformity;

(iii) A brief summary of the manufacturer's or remanufacturer's basis for contesting the Administrator's determination of nonconformity;

(iv) Information regarding the time and location of the hearing and the address to which all documents required or permitted to be filed should be sent;

(v) The address of the Hearing Clerk to whom all inquiries should be directed and with whom documents are required to be filed;

(vi) A statement that all petitions to be made an intervenor must be filed with the Hearing Clerk within 25 days from the date of the notice of public hearing and must conform to the requirements of paragraph (g) of this section.

(3) The notice of public hearing shall be issued by the General Counsel.

(g) *Intervenors.* (1) Any person desiring to intervene in a hearing to be held under section 207(c)(1) of the Act shall file a petition setting forth the facts and reasons why he/she thinks he/she should be permitted to intervene.

(2) In passing upon a petition to intervene, the following factors, among other things, shall be considered by the Presiding Officer:

(i) The nature of the petitioner's interest including the nature and the extent of the property, financial, environmental protection, or other interest of the petitioner;

(ii) The effect of the order which may be entered in the proceeding on petitioner's interest;

(iii) The extent to which the petitioner's interest will be represented by existing parties or may be protected by other means;

(iv) The extent to which petitioner's participation may reasonably be expected to assist materially in the development of a complete record;

(v) The effect of the intervention on the Agency's statutory mandate.

(3) A petition to intervene must be filed within 25 days following the notice of public hearing under section 207(c)(1) of the Act and shall be served on all parties. Any opposition to such petition must be filed within five days of such service.

(4) All petitions to be made an intervenor shall be reviewed by the Presiding Officer using the criteria set forth in paragraph (g)(2) of this section and considering any oppositions to such petition. Where the petition demonstrates that the petitioner's interest is limited to particular issues, the Presiding Officer may, in granting such petition, limit petitioner's participation to those particular issues only.

(5) If the Presiding Officer grants the petition with respect to any or all issues, he/she shall so notify, or direct the Hearing Clerk to notify, the petitioner and all parties. If the Presiding Officer denies the petition he/she shall so notify, or direct the Hearing Clerk to notify, the petitioner and all parties and shall briefly state the reasons why the petition was denied.

(6) All petitions to be made an intervenor shall include an agreement by the petitioner, and any person represented by the petitioner, to be subject to examination and cross-examination and to make any supporting and relevant records available at its own expense upon the request of the Presiding Officer, on his/her own motion or the motion of any party or other intervenor. If the intervenor fails to comply with any such request, the Presiding Officer may in his/her discretion, terminate his/her status as an intervenor.

(h) *Intervention by motion*. Following the expiration of the time prescribed in paragraph (g) of this section for the submission of petitions to intervene in a hearing, any person may file a motion with the Presiding Officer to intervene in a hearing. Such a motion must contain the information and commitments required by paragraphs (g)(2) and (g)(6) of this section, and, in addition, must show that there is good cause for granting the motion and must contain a statement that the intervenor shall be bound by agreements, arrangements, and other determinations which may have been made in the proceeding.

(i) *Amicus Curiae*. Persons not parties to the proceedings wishing to file briefs may do so by leave of the Presiding Officer granted on motion. A motion for leave shall identify the interest of the applicant and shall state the reasons why the amicus brief is desirable.

(j) *Presiding Officer*. The Presiding Officer shall have the duty to conduct a fair and impartial hearing in accordance with 5 U.S.C. 554, 556 and 557, to take all necessary action to avoid delay in the disposition of the proceedings and to maintain order. He/she shall have all power consistent with Agency rule and with the Administrative Procedure Act (5 U.S.C. 551 *et seq.*) necessary to this end, including the following:

(1) To administer oaths and affirmations;

(2) To rule upon offers of proof and receive relevant evidence;

(3) To regulate the course of the hearings and the conduct of the parties and their counsel therein;

(4) To hold conferences for simplification of the issues or any other proper purpose;

(5) To consider and rule upon all procedural and other motions appropriate in such proceedings;

(6) To require the submission of direct testimony in written form with or without affidavit whenever, in the opinion of the Presiding Officer, oral testimony is not necessary for full and

true disclosure of the facts. Testimony concerning the conduct and results of tests and inspections may be submitted in written form;

(7) To enforce agreements and orders requiring access as authorized by law;

(8) To require the filing of briefs on any matter on which he/she is required to rule;

(9) To require any party or any witness, during the course of the hearing, to state his/her position on any issue;

(10) To take or cause depositions to be taken whenever the ends of justice would be served thereby;

(11) To make decisions or recommend decisions to resolve the disputed issues of the record of the hearing;

(12) To issue, upon good cause shown, protective orders as described in paragraph (n) of this section.

(k) *Conferences.* (1) At the discretion of the Presiding Officer, conferences may be held prior to or during any hearing. The Presiding Officer shall direct the Hearing Clerk to notify all parties and intervenors of the time and location of any such conference. At the discretion of the Presiding Officer, persons other than parties may attend. At a conference the Presiding Officer may:

(i) Obtain stipulations and admissions, receive requests and order depositions to be taken, identify disputed issues of fact and law, and require or allow the submission of written testimony from any witness or party;

(ii) Set a hearing schedule for as many of the following as are deemed necessary by the Presiding Officer:

(A) Oral and written statements;

(B) Submission of written direct testimony as required or authorized by the Presiding Officer;

(C) Oral direct and cross-examination of a witness where necessary as prescribed in paragraph (p) of this section;

(D) Oral argument, if appropriate;

(iii) Identify matters of which official notice may be taken;

(iv) Consider limitation of the number of expert and other witnesses;

(v) Consider the procedure to be followed at the hearing; and

(vi) Consider any other matter that may expedite the hearing or aid in the disposition of the issue.

(2) The results of any conference including all stipulations shall, if not transcribed, be summarized in writing by the Presiding Officer and made part of the record.

(l) *Primary discovery (exchange of witness lists and documents).* (1) At a prehearing conference or within some reasonable time set by the Presiding Officer prior to the hearing, each party shall make available to the other parties the names of the expert and other witnesses the party expects to call, together with a brief summary of their expected testimony and a list of all documents and exhibits which the party expects to introduce into evidence. Thereafter, witnesses, documents, or exhibits may be added and summaries of expected testimony amended upon motion by a party.

(2)(i) The Presiding Officer, may, upon motion by a party or other person, and for good cause shown, by order:

(A) Restrict or defer disclosure by a party of the name of a witness or a narrative summary of the expected testimony of a witness; and

(B) Prescribe other appropriate measures to protect a witness.

(ii) Any party affected by any such action shall have an adequate opportunity, once he learns the name of a witness and obtains the narrative summary of his expected testimony, to prepare for the presentation of his case.

(m) *Other discovery.* (1) Except as so provided by paragraph (l) of this section, further discovery, under this paragraph (m), shall be permitted only upon determination by the Presiding Officer:

(i) That such discovery will not in any way unreasonably delay the proceeding;

(ii) That the information to be obtained is not obtainable voluntarily; and

(iii) That such information has significant probative value. The Presiding Officer shall be guided by the procedures set forth in the Federal Rules of Civil Procedure (28 U.S.C.), where practicable, and the precedents thereunder, except that no discovery shall be undertaken except upon order of the Presiding Officer or upon agreement of the parties.

(2) The Presiding Officer shall order depositions upon oral questions only

upon a showing of good cause and upon a finding that:

(i) The information sought cannot be obtained by alternative methods; or

(ii) There is a substantial reason to believe that relevant and probative evidence may otherwise not be preserved for presentation by a witness at the hearing.

(3) Any party to the proceeding desiring an order of discovery shall make a motion or motions therefor. Such a motion shall set forth:

(i) The circumstances warranting the taking of the discovery;

(ii) The nature of the information expected to be discovered; and

(iii) The time and place where it will be taken. If the Presiding Officer determines the motion should be granted, he shall issue an order for the taking of such discovery together with the conditions and terms thereof.

(4) Failure to comply with an order issued pursuant to this paragraph (m) may lead to the inference that the information to be discovered would be adverse to the person or party from whom the information was sought.

(n) *Protective orders: in camera proceedings.* (1) Upon motion by a party or by the person from whom discovery is sought, and upon a showing by the movant that the disclosure of the information to be discovered, or a particular part thereof, (other than emission data) would result in methods or processes entitled to protection as trade secrets of such person being divulged, the Presiding Officer may enter a protective order with respect to such material. Any protective order shall contain such terms governing the treatment of the information as may be appropriate under the circumstances to prevent disclosure outside the hearing: *Provided,* That the order shall state that the material shall be filed separately from other evidence and exhibits in the hearing. Disclosure shall be limited to parties to the hearing, their counsel and relevant technical consultants, and authorized representatives of the United States concerned with carrying out the Act. Except in the case of the government, disclosure may be limited to counsel to parties who shall not disclose such information to the parties themselves. Except in the case of the government, disclosure to a party or his counsel shall be conditioned on execution of a sworn statement that no disclosure of the information will be made to persons not entitled to receive it under the terms of the protective order. (No such provision is necessary where government employees are concerned because disclosure by them is subject to the terms of 18 U.S.C. 1905.)

(2)(i) A party or person seeking a protective order may be permitted to make all or part of the required showing in camera. A record shall be made of such in camera proceedings. If the Presiding Officer enters a protective order following a showing in camera, the record of such showing shall be sealed and preserved and made available to the Agency or court in the event of appeal.

(ii) Attendance at any in camera proceeding may be limited to the Presiding Officer, the Agency, and the person or party seeking the protective order.

(3) Any party, subject to the terms and conditions of any protective order issued pursuant to paragraph (n)(1) of this section, desiring for the presentation of his/her case to make use of any in camera documents or testimony shall make application to the Presiding Officer by motion setting forth the justification therefor. The Presiding Officer, in granting any such motion, shall enter an order protecting the rights of the affected persons and parties and preventing unnecessary disclosure of such information, including the presentation of such information and oral testimony and cross-examination concerning it in executive session, as in his/her discretion is necessary and practicable.

(4) In the submittal of findings, briefs, or other papers, counsel for all parties shall make a good faith attempt to refrain from disclosing the specific details of in camera documents and testimony. This shall not preclude references in such findings, briefs, or other papers to such documents or testimony including generalized statements based on their contents. To the extent that counsel consider it necessary to include specific details in their presentations, such data shall be

incorporated in separate findings, briefs, or other papers marked ''confidential'', which shall become part of the in camera record.

(o) *Motions.* (1) All motions, except those made orally during the course of the hearing, shall be in writing and shall state with particularity the grounds therefor, shall set forth the relief or order sought, and shall be filed with the Hearing Clerk and served upon all parties.

(2) Within ten days after service of any motion filed pursuant to this section, or within such other time as may be fixed by the Environmental Appeals Board or the Presiding Officer, as appropriate, any party may serve and file an answer to the motion. The movant shall, if requested by the Environmental Appeals Board or the Presiding Officer, as appropriate, serve and file reply papers within the time set by the request.

(3) The Presiding Officer shall rule upon all motions filed or made prior to the filing of his decision or accelerated decision, as appropriate. The Environmental Appeals Board shall rule upon all motions filed prior to the appointment of a Presiding Officer and all motions filed after the filing of the decision of the Presiding Officer or accelerated decision. Oral argument of motions will be permitted only if the Presiding Officer or the Environmental Appeals Board, as appropriate, deems it necessary.

(p) *Evidence.* (1) The official transcripts and exhibits, together with all papers and requests filed in the proceeding, shall constitute the record. Immaterial or irrelevant parts of an admissible document shall be segregated and excluded so far as practicable. Documents or parts thereof subject to a protective order under paragraph (n) of this section shall be segregated. Evidence may be received at the hearing even though inadmissible under the rules of evidence applicable to judicial proceedings. The weight to be given evidence shall be determined by its reliability and probative value.

(2) The Presiding Officer shall allow the parties to examine and to cross-examine a witness to the extent that such examination and cross-examination is necessary for a full and true disclosure of the facts.

(3) Rulings of the Presiding Officer on the admissibility of evidence, the propriety of examination and cross-examination and other procedural matters shall appear in the record.

(4) Parties shall automatically be presumed to have taken exception to an adverse ruling.

(q) *Interlocutory appeal.* (1) An interlocutory appeal may be taken to the Environmental Appeals Board either:

(i) With the consent of the Presiding Officer and where he certifies on the record or in writing that the allowance of an interlocutory appeal is clearly necessary to prevent exceptional delay, expense or prejudice to any party or substantial detriment to the public interest; or

(ii) Absent the consent of the Presiding Officer, by permission of the Environmental Appeals Board.

(2) Applications for interlocutory appeal of any ruling or order of the Presiding Officer may be filed with the Presiding Officer within 5 days of the issuance of the ruling or order being appealed. Answers thereto by other parties may be filed within 5 days of the service of such applications.

(3) The Presiding Officer shall rule on such applications within 5 days of the filing of such application or answers thereto.

(4) Applications to file such appeals absent consent of the Presiding Officer shall be filed with the Environmental Appeals Board within 5 days of the denial of any appeal by the Presiding Officer.

(5) The Environmental Appeals Board will consider the merits of the appeal on the application and any answers thereto. No oral argument will be heard nor other briefs filed unless the Environmental Appeals Board directs otherwise.

(6) Except under extraordinary circumstances as determined by the Presiding Officer, the taking of an interlocutory appeal will not stay the hearing.

(r) *Record.* (1) Hearings shall be stenographically reported and transcribed, and the original transcript shall be part of the record and the sole official transcript. Copies of the record shall be

filed with the Hearing Clerk and made available during Agency business hours for public inspection. Any person desiring a copy of the record of the hearing or any part thereof shall be entitled to the same upon payment of the cost thereof.

(2) The official transcripts and exhibits, together with all papers and requests filed in the proceeding, shall constitute the record.

(s) *Findings, conclusions.* (1) Within 20 days of the close of the reception of evidence, or within such longer time as may be fixed by the Presiding Officer, any party may submit for the consideration of the Presiding Officer findings of fact, conclusions of law, and a rule or order, together with reasons therefor and briefs in support thereof. Such proposals shall be in writing, shall be served upon all parties, and shall contain adequate references to the record and authorities relied on.

(2) The record shall show the Presiding Officer's ruling on the findings and conclusions except when his/her order disposing of the proceeding otherwise informs the parties of the action taken by him/her thereon.

(t) *Decision of the Presiding Officer.* (1) Unless extended by the Environmental Appeals Board, the Presiding Officer shall issue and file with the Hearing Clerk his decision within 30 days after the period for filing findings as provided for in paragraph (s) of this section has expired.

(2) The Presiding Officer's decision shall become the opinion of the Environmental Appeals Board:

(i) When no notice of intention to appeal as described in paragraph (u) of this section is filed, 30 days after the issuance thereof, unless in the interim the Environmental Appeals Board shall have taken action to review or stay the effective date of the decision; or

(ii) When a notice of intention to appeal is filed but the appeal is not perfected as required by paragraph (u) of this section, 5 days after the period allowed for perfection of an appeal has expired unless within that 5 day period, the Environmental Appeals Board shall have taken action to review or stay the effective date of the decision.

(3) The Presiding Officer's decision shall include a statement of findings and conclusions, as well as the reasons or basis therefor, upon all the material issues of fact or law presented on the record and an appropriate rule or order. Such decision shall be supported by substantial evidence and based upon a consideration of the whole record.

(4) At any time prior to the issuance of his decision, the Presiding Officer may reopen the proceeding for the reception of further evidence. Except for the correction of clerical errors, the jurisdiction of the Presiding Officer is terminated upon the issuance of his/her decision.

(u) *Appeal from the decision of the Presiding Officer.* (1) Any party to a proceeding may appeal the Presiding Officer's decision to the Environmental Appeals Board, Provided, That within 10 days after issuance of the Presiding Officer's decision such party files a notice of intention to appeal and an appeal brief within 30 days of such decision.

(2) When an appeal is taken from the decision of the Presiding Officer, any party may file a brief with respect to such appeal. The brief shall be filed within 20 days of the date of the filing of the appellant's brief.

(3) Any brief filed pursuant to this paragraph (u) shall contain in the order indicated, the following:

(i) A subject index of the matter in the brief, with page references, and a table of cases (alphabetically arranged), textbooks, statutes, and other material cited, with page references thereto;

(ii) A specification of the issues intended to be urged;

(iii) The argument presenting clearly the points of fact and law relied upon in support of the position taken on each issue, with specific page references to the record and the legal or other material relied upon; and

(iv) A form of rule or order for the Environmental Appeals Board's consideration if different from the rule or order contained in the Presiding Officer's decision.

(4) No brief in excess of 40 pages shall be filed without leave of the Environmental Appeals Board.

(5) Oral argument will be allowed in the discretion of the Environmental Appeals Board.

(v) *Review of the Presiding Officer's decision in absence of appeal.* (1) If, after the expiration of the period for taking an appeal as provided for by paragraph (u) of this section, no notice of intention to appeal the decision of the Presiding Officer has been filed, or if filed, not perfected, the Hearing Clerk shall so notify the Environmental Appeals Board.

(2) The Environmental Appeals Board, upon receipt of notice from the Hearing Clerk that no notice of intention to appeal has been filed, or if filed, not perfected pursuant to paragraph (u) of this section, may, on its own motion, within the time limits specified in paragraph (t)(2) of this section, review the decision of the Presiding Officer. Notice of the intention of the Environmental Appeals Board to review the decision of the Presiding Officer shall be given to all parties and shall set forth the scope of such review and the issue which shall be considered and shall make provision for filing of briefs.

(w) *Decision on appeal or review.* (1) Upon appeal from or review of the Presiding Officer's decision, the Environmental Appeals Board shall consider such parts of the record as are cited or as may be necessary to resolve the issues presented and, in addition shall to the extent necessary or desirable exercise all the powers which it could have exercised if it had presided at the hearing.

(2) In rendering its decision, the Environmental Appeals Board shall adopt, modify, or set aside the findings, conclusions, and rule or order contained in the decision of the Presiding Officer and shall set forth in its decision a statement of the reasons or bases for its action.

(3) In those cases where the Environmental Appeals Board determines that it should have further information or additional views of the parties as to the form and content of the rule or order to be issued, the Environmental Appeals Board, in its discretion, may withhold final action pending the receipt of such additional information or views, or may remand the case to the Presiding Officer.

(x) *Reconsideration.* Within twenty (20) days after issuance of the Environmental Appeals Board's decision, any party may file with the Environmental Appeals Board a petition for reconsideration of such decision, setting forth the relief desired and the grounds in support thereof. Any petition filed under this paragraph (x) must be confined to new questions raised by the decision or the final order and upon which the petitioner had no opportunity to argue before the Presiding Officer or the Environmental Appeals Board. Any party desiring to oppose such a petition shall file and answer thereto within ten (10) days after the filing of the petition. The filing of a petition for reconsideration shall not operate to stay the effective date of the decision or order or to toll the running of any statutory time period affecting such decision or order unless specifically so ordered by the Environmental Appeals Board.

(y) *Accelerated decision: Dismissal.* (1) The Presiding Officer, upon motion of any party or sua sponte, may at any time render an accelerated decision in favor of the Agency or the manufacturer or remanufacturer as to all or any part of the proceeding, without further hearing or upon such limited additional evidence such as affidavits as he/she may require, or dismiss any party with prejudice, under any of the following conditions:

(i) Failure to state a claim upon which relief can be granted, or direct or collateral estoppel;

(ii) There is no genuine issue of material fact and a party is entitled to judgment as a matter of law; or

(iii) Such other and further reasons as are just, including specifically failure to obey a procedural order of the Presiding Officer.

(2) If under this paragraph (y) an accelerated decision is issued as to all the issues and claims joined in the proceeding, the decision shall be treated for the purposes of these procedures as the decision of the Presiding Officer as provided in paragraph (p) of this section.

(3) If under this paragraph (y), judgment is rendered on less than all issues or claims in the proceeding, the Presiding Officer shall determine what material facts exist without substantial controversy and what material

facts are actually and in good faith controverted. He/she shall thereupon issue an order specifying the facts which appear without substantial controversy, and the issues and claims upon which the hearing will proceed.

(z) *Conclusion of hearing.* (1) If, after the expiration of the period for taking an appeal as provided for by paragraph (u) of this section, no appeal has been taken from the Presiding Officer's decision, and, after the expiration of the period for review by the Environmental Appeals Board on its own motion as provided for by paragraph (v) of this section, the Environmental Appeals Board does not move to review such decision, the hearing will be deemed to have ended at the expiration of all periods allowed for such appeal and review.

(2) If an appeal of the Presiding Officer's decision is taken pursuant to paragraph (u) of this section, or if, in the absence of such appeal, the Environmental Appeals Board moves to review the decision of the Presiding Officer pursuant to paragraph (v) of this section, the hearing will be deemed to have ended upon the rendering of a final decision by the Environmental Appeals Board.

(aa) *Judicial review.* (1) The Administrator hereby designates the Deputy General Counsel, Environmental Protection Agency as the officer upon whom copy of any petition for judicial review shall be served. Such officer shall be responsible for filing in the court the record on which the order of the Environmental Appeals Board is based.

(2) Before forwarding the record to the court, the Agency shall advise the petitioner of costs of preparing it and as soon as payment to cover fees is made shall forward the record to the court.

Subpart I—Importation of Nonconforming Locomotives and Locomotive Engines

§ 92.801 Applicability.

(a) Except where otherwise indicated, this subpart is applicable to importers of locomotives or locomotive engines for which the Administrator has promulgated regulations under this part prescribing emission standards, that are offered for importation or imported into the United States, but which locomotives or locomotive engines, at the time of importation or being offered for importation, are not covered by certificates of conformity issued under section 213 and section 206(a) of the Clean Air Act (that is, which are nonconforming locomotives or locomotive engines as defined in § 92.2), and this part. Compliance with regulations under this subpart does not relieve any person or entity from compliance with other applicable provisions of the Clean Air Act.

(b) Regulations prescribing further procedures for the importation of locomotives and locomotive engines into the Customs territory of the United States, as defined in 19 U.S.C. 1202, are set forth in U.S. Customs Service regulations (19 CFR chapter I).

§ 92.802 Definitions.

The definitions of subpart A of this part apply to this subpart.

§ 92.803 Admission.

A nonconforming locomotive or locomotive engine offered for importation may be admitted into the United States pursuant to the provisions of this subpart. In order to obtain admission the importer must submit to the Administrator a written request for approval containing the following:

(a) Identification of the importer of the locomotive or locomotive engine and the importer's address, telephone number, and taxpayer identification number;

(b) Identification of the locomotive's or locomotive engine's owner, the owner's address, telephone number, and taxpayer identification number;

(c) Identification of the locomotive and/or locomotive engine including make, model, identification number, and original production year;

(d) Information indicating the provision in this subpart under which the locomotive or locomotive engine is to be imported;

(e) Identification of the place(s) where the locomotive or locomotive engine is to be stored until EPA approval of the importer's application to the Administrator for final admission;

(f) Authorization for EPA enforcement officers to conduct inspections or testing otherwise permitted by the Act or regulations thereunder; and

(g) Such other information as is deemed necessary by the Administrator.

§ 92.804 Exemptions.

(a) Unless otherwise specified, any person may apply for the exemptions allowed by this section.

(b) Notwithstanding other requirements of this subpart, a nonconforming locomotive or locomotive engine that qualifies for a temporary exemption under this paragraph may be conditionally admitted into the United States if prior written approval for the conditional admission is obtained from the Administrator. Conditional admission is to be under bond. The Administrator may request that the U.S. Customs Service require a specific bond amount to ensure compliance with the requirements of the Act and this subpart. A written request for a temporary exemption from the Administrator shall contain the identification required in § 92.803 and information that demonstrates that the locomotives and or locomotive engines qualify for an exemption. Noncompliance with provisions of this section may result in the forfeiture of the total amount of the bond and/or exportation of the locomotive or locomotive engine. The following temporary exemptions are permitted by this paragraph (b):

(1) *Exemption for repairs or alterations.* Upon written approval by EPA, a person may conditionally import under bond a nonconforming locomotive or locomotive engine solely for purpose of repair(s) or alteration(s). The locomotive or locomotive engine may not be operated in the United States other than for the sole purpose of repair or alteration or shipment to the point of repair or alteration and to the port of export. It may not be sold or leased in the United States and is to be exported upon completion of the repair(s) or alteration(s).

(2) *Testing exemption.* A nonconforming test locomotive or locomotive engine may be conditionally imported by a person subject to the requirements of § 92.905. A test locomotive or locomotive engine may be operated in the United States provided that the operation is an integral part of the test. This exemption is limited to a period not exceeding one year from the date of importation unless a request is made by the appropriate importer, and subsequently granted by EPA, concerning the locomotive or locomotive engine in accordance with § 92.905 for a subsequent one-year period.

(3) *Display exemptions.* (i) A nonconforming locomotive or locomotive engine intended solely for display may be conditionally imported under bond subject to the requirements of § 92.906(b).

(ii) A display locomotive or locomotive engine may be imported by any person for purposes related to a business or the public interest. Such purposes do not include collections normally inaccessible or unavailable to the public on a daily basis, display of a locomotive or locomotive engine at a dealership, private use, or other purpose that the Administrator determines is not appropriate for display exemptions. A display locomotive or locomotive engine may not be sold or leased in the United States and may not be operated in the United States except for the operation incident and necessary to the display purpose.

(iii) A display exemption is granted for 12 months or for the duration of the display purpose, whichever is shorter. Extensions of up to 12 months each are available upon approval by the Administrator. In no circumstances, however, may the total period of exemption exceed 36 months.

(c) National security exemption. Notwithstanding any other requirement of this subpart, a locomotive or locomotive engine may be permanently imported into the United States under the national security exemption found at § 92.908, if prior written approval for such permanent importation is obtained from the Administrator. A request for approval is to contain the identification information required in § 92.803 and information that demonstrates that the importer is entitled to the exemption.

(d) An application for exemption provided for in paragraphs (b) and (c) of this section shall be mailed to: Group Manager, Engine Compliance Programs

Group, Engine Programs and Compliance Division U.S. Environmental Protection Agency, 6403–J, 1200 Pennsylvania Ave., NW., Washington, DC 20460, Attention: Imports.

(e) Incidental use exemption. Locomotives that are operated primarily outside of the United States, and that enter the United States temporarily from Canada or Mexico are exempt from the requirements and prohibitions of this part without application, provided that the operation within the United States is not extensive and is incidental to their primary operation.

§ 92.805 Prohibited acts; penalties.

(a) The importation of a locomotive or locomotive engine which is not covered by a certificate of conformity other than in accordance with this subpart and the entry regulations of the U.S. Customs Service is prohibited. Failure to comply with this section is a violation of section 213(d) and section 203 of the Act.

(b) Unless otherwise permitted by this subpart, during a period of conditional admission, the importer of a locomotive or locomotive engine may not:

(1) Operate the locomotive or locomotive engine in the United States;

(2) Sell or lease or offer the locomotive or locomotive engine for sale or lease.

(c) A locomotive or locomotive engine conditionally admitted pursuant to § 92.804 and not otherwise permanently exempted or excluded by the end of the period of conditional admission, or within such additional time as the Administrator and the U.S. Customs Service may allow, is deemed to be unlawfully imported into the United States in violation of section 213(d) and section 203 of the Act, unless the locomotive or locomotive engine has been delivered to the U.S. Customs Service for export or other disposition under applicable Customs laws and regulations by the end of the period of conditional admission. A locomotive or locomotive engine not so delivered is subject to seizure by the U.S. Customs Service.

(d) An importer who violates section 213(d) and section 203 of the Act is subject to a civil penalty under section 205 of the Act and § 92.1106. In addition to the penalty provided in the Act and § 92.1106, where applicable, a person or entity who imports an engine under the exemption provisions of § 92.804 and, who fails to deliver the locomotive or locomotive engine to the U.S. Customs Service by the end of the period of conditional admission is liable for liquidated damages in the amount of the bond required by applicable Customs laws and regulations.

Subpart J—Exclusion and Exemption Provisions

§ 92.901 Purpose and applicability.

The provisions of this subpart identify excluded locomotives (i.e., locomotives not covered by the Act) and allow for the exemption of locomotives and locomotive engines from certain provisions of this part. The applicability of the exclusions is described in § 92.903, and the applicability of the exemption allowances is described in §§ 92.904 through 92.909.

§ 92.902 Definitions.

The definitions of subpart A of this part apply to this subpart.

§ 92.903 Exclusions.

(a) Upon written request with supporting documentation, EPA will make written determinations as to whether certain locomotives are excluded from applicability of this part. Any locomotives that are determined to be excluded are not subject to the regulations under this part. Requests to determine whether certain locomotives are excluded should be sent to: Group Manager, Engine Compliance Programs Group, Engine Programs and Compliance Division U.S. Environmental Protection Agency, 6403–J, 1200 Pennsylvania Ave., NW., Washington, DC 20460.

(b) EPA will maintain a list of models of locomotives that have been determined to be excluded from coverage under this part. This list will be available to the public and may be obtained by writing to the address in paragraph (a) of this section.

(c) In addition to the locomotives excluded in paragraph (a) of this section, certain vehicles are not subject to the requirements and prohibitions of this

part because they are excluded from the definitions of ''locomotive'' and/or ''new locomotive'' in § 92.2.

§ 92.904 Exemptions.

(a) Except as specified otherwise in this subpart, the provisions of §§ 92.904 through 92.911 exempt certain new locomotives and new locomotive engines from the standards, other requirements, and prohibitions of this part, except for the requirements of this subpart and the requirements of § 92.1104.

(b)(1) Any person may request a testing exemption subject to the provisions of § 92.905.

(2) Any locomotive or locomotive engine manufacturer or remanufacturer may request a national security exemption subject to the provisions of § 92.908.

(3) Locomotive or locomotive engines manufactured or remanufactured for export purposes are exempt without application, subject to the provisions of § 92.909, except as otherwise specified by § 92.909.

(4) Manufacturer-owned and remanufacturer-owned locomotive or locomotive engines are exempt without application, subject to the provisions of § 92.906(a).

(5) Display locomotive or locomotive engines are exempt without application, subject to the provisions of § 92.906(b).

(6) Locomotive propulsion engines that are identical to engines that are covered by a certificate of conformity issued under 40 CFR part 89, and the locomotives in which they are used, are exempt, subject to the provisions of § 92.907.

§ 92.905 Testing exemption.

(a)(1) The Administrator may exempt from the standards and/or other requirements and prohibitions of this part new locomotives or new locomotive engines that are being used solely for the purpose of conducting a test program. Any person requesting an exemption for the purpose of conducting a test program must demonstrate the following:

(i) That the test program has a purpose which constitutes an appropriate basis for an exemption in accordance this section;

(ii) That the proposed test program necessitates the granting of an exemption;

(iii) That the proposed test program exhibits reasonableness in scope; and

(iv) That the proposed test program exhibits a degree of oversight and control consonant with the purpose of the test program and EPA's monitoring requirements.

(2) Paragraphs (b), (c), (d), and (e) of this section describe what constitutes a sufficient demonstration for each of the four elements identified in paragraphs (a)(1)(i) through (iv) of this section.

(b) With respect to the purpose of the proposed test program, an appropriate purpose would be research, investigations, studies, demonstrations, technology development, or training, but not national security. A concise statement of purpose is a required item of information.

(c) With respect to the necessity that an exemption be granted, necessity arises from an inability to achieve the stated purpose in a practicable manner without performing or causing to be performed one or more of the prohibited acts under § 92.1103. In appropriate circumstances, time constraints may be a sufficient basis for necessity, but the cost of certification alone, in the absence of extraordinary circumstances, is not a basis for necessity.

(d) With respect to reasonableness, a test program must exhibit a duration of reasonable length and affect a reasonable number of engines. In this regard, required items of information include:

(1) An estimate of the program's duration; and

(2) The maximum number of locomotives or locomotive engines involved.

(e) With respect to control, the test program must incorporate procedures consistent with the purpose of the test and be capable of affording EPA monitoring capability. As a minimum, required items of information include:

(1) The technical nature of the testing;

(2) The location(s) of the testing;

(3) The time, work, or mileage duration of the testing;

(4) The ownership arrangement with regard to the locomotives and engines involved in the testing;

(5) The intended final disposition of the locomotives and engines;

(6) The manner in which the locomotive or engine identification numbers will be identified, recorded, and made available; and

(7) The means or procedure whereby test results will be recorded.

(f) A manufacturer or remanufacturer of new locomotives or locomotive engines may request a testing exemption to cover locomotives or locomotive engines intended for use in test programs planned or anticipated over the course of a subsequent two-year period. Unless otherwise required by the Director, Engine Programs and Compliance Division, a manufacturer or remanufacturer requesting such an exemption need only furnish the information required by paragraphs (a)(1) and (d)(2) of this section along with a description of the recordkeeping and control procedures that will be employed to assure that the locomotives or locomotive engines are used for purposes consistent with paragraph (a) of this section.

(g) For locomotives being used for the purpose of developing a fundamentally new emission control technology related either to an alternative fuel or an aftertreatment device, the Administrator may exempt the locomotive from some or all of the applicable standards of this part for the full useful life of the locomotive, subject to the provisions of paragraphs (a) through (f) of this section.

§ 92.906 Manufacturer-owned, remanufacturer-owned exemption and display exemption.

(a) Any manufacturer-owned or remanufacturer-owned locomotive or locomotive engine, as defined by § 92.2, is exempt from § 92.1103, without application, if the manufacturer complies with the following terms and conditions:

(1) The manufacturer or remanufacturer must establish, maintain, and retain the following adequately organized and indexed information on each exempted locomotive or locomotive engine:

(i) Locomotive or engine identification number;

(ii) Use of the locomotive or engine on exempt status; and

(iii) Final disposition of any locomotive or engine removed from exempt status.

(2) The manufacturer or remanufacturer must provide right of entry and access to these records to EPA Enforcement Officers as outlined in § 92.208.

(3) The manufacturer or remanufacturer must permanently affix a label to each locomotive or locomotive engine on exempt status, unless the requirement is waived or an alternate procedure is approved by the Director, Engine Programs and Compliance Division. This label should:

(i) Be affixed in a readily visible portion of the locomotive or locomotive engine;

(ii) Be attached in such a manner that cannot be removed without destruction or defacement;

(iii) State in the English language and in block letters and numerals of a color that contrasts with the background of the label, the following information:

(A) The label heading ''Emission Control Information'';

(B) Full corporate name and trademark of manufacturer or remanufacturer;

(C) Engine displacement, engine family identification, and model year of engine; or person of office to be contacted for further information about the engine;

(D) The statement ''This locomotive or locomotive engine is exempt from the prohibitions of 40 CFR 92.1103.''

(4) No provision of paragraph (a)(3) of this section prevents a manufacturer or remanufacturer from including any other information it desires on the label.

(5) The locomotive or locomotive engine is not used in revenue-generating service, or sold.

(b) Display exemption. An uncertified locomotive or locomotive engine that is to be used solely for display purposes, and that will only be operated incident and necessary to the display purpose, and will not be sold unless an applicable certificate of conformity has

been obtained for the locomotive or engine, is exempt without request from the standards of this part.

§ 92.907 Non-locomotive-specific engine exemption.

(a) For manufacturers selling non-locomotive-specific engines to be used as propulsion engines in remanufactured locomotives, such locomotives and engines are exempt, provided:

(1) The engines are covered by a certificate of conformity issued under 40 CFR part 89;

(2) More engines are reasonably projected to be sold and used under the certificate for non-locomotive use than for use in locomotives;

(3) The number of such engines exempted under this paragraph (a) does not exceed 25 per manufacturer in any calendar year;

(4) The Administrator has approved the exemption as specified in paragraph (e) of this section.

(b) For manufacturers of freshly manufactured switch locomotives powered by non-locomotive-specific engines, such freshly manufactured switch locomotives are exempt, provided:

(1) The engines are covered by a certificate of conformity issued under 40 CFR part 89;

(2) More engines are reasonably projected to be sold and used under the certificate for non-locomotive use than for use in locomotives;

(3) The number of such locomotives sold within any three-year period by the manufacturer, and exempted under this paragraph (b) does not exceed 15; and

(4) The Administrator has approved the exemption as specified in paragraph (e) of this section.

(c)(1) The remanufacture of locomotive engines that have been exempted under this section is exempt without request provided that the remanufacturer remanufactures them to a previously-certified configuration, or to be equivalent to engines that have been previously certified under this part or 40 CFR part 89.

(2) The remanufacture of non-locomotive-specific engines that were used in locomotives prior to January 1, 2000 is exempt from the requirements of this part provided: The remanufacturer remanufactures them to be equivalent to engines that have been previously certified under this part or 40 CFR part 89, or demonstrates that the NO_X emissions from the remanufactured locomotive engine are at least 40 percent less than its emissions prior to certification; and the Administrator has approved the exemption as specified in paragraph (e) of this section.

(d) Manufacturers and remanufacturers of engines and/or locomotives exempted under this section shall:

(1) Report annually to EPA the number of engines exempted under paragraph (a) of this section;

(2) Report annually to EPA the number of locomotives exempted under paragraph (b) of this section; and

(3) Upon the Administrator's request, provide test data showing the emissions of the engine or locomotive when it is operated at the actual in-use locomotive power points.

(e)(1) Manufacturers and remanufacturers seeking an exemption under this section shall notify the Administrator of such intent at least 90 days prior to selling or placing into service the locomotives or locomotive engines.

(2) The Administrator shall deny a non-locomotive-specific exemption in any case where he/she has evidence that approving such an exemption would be inappropriate because of adverse environmental or economic impacts.

(3) When denying an exemption, the Administrator shall notify the manufacturer or remanufacturer of EPA's decision to deny or consider denying the exemption within 60 days of the manufacturer's or remanufacturer's notification in paragraph (e)(1) of this section.

(4) Unless the Administrator notifies the manufacturer or remanufacturer of EPA's decision to deny or consider denying the exemption within 60 days of the manufacturer's or remanufacturer's notification in paragraph (e)(1) of this section, the exemption shall be considered approved 90 days of the manufacturer's or remanufacturer's notification.

§92.908 National security exemption.

A manufacturer or remanufacturer requesting a national security exemption must state the purpose for which the exemption is required and the request must be endorsed by an agency of the federal government charged with responsibility for national defense.

§92.909 Export exemptions.

(a) A new locomotive or locomotive engine intended solely for export, and so labeled or tagged on the outside of any container, the locomotive and on the engine itself, is subject to the provisions of §92.1103, unless the importing country has new locomotive or new locomotive engine emission standards which differ from EPA standards.

(b) For the purpose of paragraph (a) of this section, a country having no standards whatsoever is deemed to be a country having emission standards which differ from EPA standards.

(c) It is a condition of any exemption for the purpose of export under paragraph (a) of this section, that such exemption is void *ab initio* with respect to a new locomotive or locomotive engine intended solely for export, where such locomotive or locomotive engine is sold, or offered for sale, to an ultimate purchaser or otherwise distributed or introduced into commerce in the United States for purposes other than export.

§92.910 Granting of exemptions.

(a) If upon completion of the review of an exemption request made pursuant to §92.905 or §92.908, EPA determines it is appropriate to grant such an exemption, a memorandum of exemption is to be prepared and submitted to the person requesting the exemption. The memorandum is to set forth the basis for the exemption, its scope, and such terms and conditions as are deemed necessary. Such terms and conditions generally include, but are not limited to, agreements by the applicant to conduct the exempt activity in the manner described to EPA, create and maintain adequate records accessible to EPA at reasonable times, employ labels for the exempt locomotives or engines setting forth the nature of the exemption, take appropriate measures to assure that the terms of the exemption are met, and advise EPA of the termination of the activity and the ultimate disposition of the locomotives or engines.

(b) Any exemption granted pursuant to paragraph (a) of this section is deemed to cover any subject locomotive or engine only to the extent that the specified terms and conditions are complied with. A breach of any term or condition causes the exemption to be void ab initio with respect to any locomotive or engine. Consequently, the causing or the performing of an act prohibited under §92.1103(a)(1) or (a)(3), other than in strict conformity with all terms and conditions of this exemption, renders the person to whom the exemption is granted, and any other person to whom the provisions of §92.1103(a) are applicable, liable to suit under sections 204 and 205 of the Act.

EFFECTIVE DATE NOTE: At 63 FR 19077, Apr. 16, 1998, §92.910 was added. This section contains information collection and recordkeeping requirements and will not become effective until approval has been given by the Office of Management and Budget.

§92.911 Submission of exemption requests.

Requests for exemption or further information concerning exemptions and/or the exemption request review procedure should be addressed to: Group Manager, Engine Compliance Programs Group, Engine Programs and Compliance Division U.S. Environmental Protection Agency, 6403-J, 1200 Pennsylvania Ave., NW., Washington, DC 20460.

Subpart K—Requirements Applicable to Owners and Operators of Locomotives and Locomotive Engines

§92.1001 Applicability.

The requirements of this subpart are applicable to railroads and all other owners and operators of locomotives and locomotive engines subject to the provisions of subpart A of this part, except as otherwise specified.

§92.1002 Definitions.

The definitions of subpart A of this part apply to this subpart.

§ 92.1003 In-use testing program.

(a) *Applicability*. This section applies to all Class I freight railroads, beginning on January 1, 2005.

(b) *Testing requirements*. Each railroad subject to the provisions of this section shall annually test a sample of locomotives in its fleet. For the purpose of this section, a railroad's fleet includes both the locomotives that it owns and the locomotives that it is leasing.

(1)(i) Except as specified in paragraphs (b)(1) (ii) and (iii) of this section, the number of locomotives to be tested shall be at least 0.15 percent of the average number of locomotives in the railroad's fleet during the previous calendar year (i.e., the number tested shall be 0.0015 multiplied by the number of locomotives in the fleet, rounded up to the next whole number).

(ii) After December 31, 2015, the number of locomotives to be tested by railroads with 500 or more locomotives shall be at least 0.10 percent of the average number of locomotives in the railroad's fleet during the previous calendar year (i.e., the number tested shall be 0.0010 multiplied by the number of locomotives in the fleet, rounded up to the next whole number). After December 31, 2015, the number of locomotives to be tested by railroads with fewer than 500 locomotives shall be zero. The provisions of this paragraph (b)(1)(ii) apply only when:

(A) No new locomotive emission standards have taken effect during the previous 5 years;

(B) Locomotive emission controls have not changed fundamentally, during the previous 5 years, in any manner that could reasonably be expected to have the potential to significantly affect emissions durability; and

(C) Testing during the previous 5 years has shown, to the satisfaction of the Administrator, that the degree of noncompliance for tested locomotives is low enough that the higher rate of testing specified in paragraph (b)(1)(i) of this section is not needed.

(iii) The Administrator may allow a railroad to perform a smaller number of tests than specified in paragraphs (b)(1) (i) or (ii) of this section, where he/she determines that the number of tests specified in paragraphs (b)(1)(i) or (ii) of this section is not necessary.

(2) Testing shall be performed according to the test procedures in subpart B of this part, unless otherwise approved by the Administrator.

(c) *Test locomotive selection*. (1)(i) A representative sample of locomotives shall be randomly selected for testing.

(ii) Unless otherwise specified by the Administrator, the selection shall be made by the railroad.

(iii) The railroad shall select locomotives from each manufacturer and remanufacturer, and from each tier level (e.g., Tier 0, Tier 1 and Tier 2) in proportion to their numbers in the railroad's fleet, except where specified or allowed otherwise by the Administrator.

(iv) Locomotives tested during the previous year shall be excluded from the sample.

(v) Locomotives may not be excluded from the sample because of visible smoke, a history of durability problems, or other evidence of malmaintenance.

(2)(i) Locomotives selected for testing according to the provisions of this section shall have been certified in compliance with requirements in subpart A of this part, and shall have been operated for at least 100 percent of their useful lives.

(ii) Where the number of locomotives that have been operated for at least 100 percent of their useful lives is not large enough to fulfill the testing requirement, locomotives still within their useful lives shall be tested. In this case, the locomotives must have been operated longer than at least 80 percent of the locomotives in the railroad's fleet.

(3) Where specified by the Administrator, the railroad shall test specified locomotives in its fleet, including locomotives that do not meet the criteria specified in paragraph (c)(2) of this section.

(d) *Reporting requirements*. All testing done in compliance with the provisions of this section shall be reported to EPA within thirty calendar days of the end of each year. At a minimum, each report shall contain the following:

(1) Full corporate name and address of the railroad providing the report.

(2) For each locomotive tested, the following:

(i) Corporate name of the manufacturer and last remanufacturer(s) (including both certificate holder and installer, where different) of the locomotive, and the corporate name of the manufacturer or last remanufacturer(s) of the engine if different than that of the manufacturer or remanufacturer(s) of the locomotive;

(ii) Year, and if known month of original manufacture of the locomotive and the engine, and the manufacturer's model designation of the locomotive and manufacturer's model designation of the engine, and the locomotive identification number;

(iii) Year, and if known month that the engine last underwent remanufacture, and the engine remanufacturer's designation which either reflects, or most closely reflects, the engine after the last remanufacture, and the engine family identification;

(iv) The number of MW-hrs and miles (where available) the locomotive has been operated since its last remanufacture; and

(v) The emission test results for all measured pollutants.

(e) Any railroad that performed no emission testing during a given year is exempt from the reporting requirements described in paragraph (d) of this section for that year.

(f) In lieu of some or all of the test data required by this section, railroads may submit equivalent emission data collected for other purposes. The Administrator may also allow emission data collected using other testing or sampling procedures to be submitted in lieu of some or part of the data required by this section with advance approval.

(g) All reports submitted to EPA in compliance with the provisions of this subpart must be addressed to: Group Manager, Engine Compliance Programs Group, Engine Programs and Compliance Division 6403–J, Environmental Protection Agency, 1200 Pennsylvania Ave., NW., Washington, DC 20460.

§ 92.1004 Maintenance and repair.

(a) Unless otherwise approved by the Administrator, all owners of locomotives subject to the provisions of this part shall ensure that all emission-related maintenance is performed on the locomotives, as specified in the maintenance instructions provided by the certifying manufacturer or remanufacturer in compliance with § 92.211 (or maintenance that is equivalent to the maintenance specified by the certifying manufacturer or remanufacturer in terms of maintaining emissions performance).

(b) Unless otherwise approved by the Administrator, all maintenance and repair of locomotives and locomotive engines subject to the provisions of this part performed by any owner, operator or other maintenance provider, including maintenance that is not covered by paragraph (a) of this section, shall be performed, using good engineering judgement, in such a manner that the locomotive or locomotive engine continues (after the maintenance or repair) to the meet the emission standards or family emission limits (as applicable) it was certified as meeting prior to the need for maintenance or repair.

(c) The owner of the locomotive shall maintain records of all maintenance and repair that could reasonably affect the emission performance of any locomotive or locomotive engine subject to the provision of this part.

§ 92.1005 In-use locomotives.

(a)(1) Any Class I railroad subject to the provisions of this subpart shall supply to the Administrator, upon request, in-use locomotives, selected by the Administrator. The number of locomotives which the Administrator requests under this paragraph (a)(1) shall not exceed five locomotives per railroad per calendar year. These locomotives or engines shall be supplied for testing at such reasonable time and place and for such reasonable periods as the Administrator may require. The Administrator shall make reasonable allowances to the railroad to schedule the supply of locomotives for testing in such a manner that it minimizes disruption of its operational schedule.

(2) Any non-Class I railroad or other entity subject to the provisions of this subpart shall supply to the Administrator, upon request, in-use locomotives, selected by the Administrator. The number of locomotives which the Administrator requests

under this paragraph (a)(2) shall not exceed two locomotives per railroad (or other entity) per calendar year. These locomotives or engines shall be supplied for testing at such reasonable time and place and for such reasonable periods as the Administrator may require. The Administrator shall make reasonable allowances to the railroad or other entity to schedule the supply of locomotives for testing in such a manner that it minimizes disruption of its operational schedule. The Administrator shall request locomotives under this paragraph (a)(2) only for purposes which cannot be accomplished using locomotives supplied under paragraph (a)(1) of this section.

(b) Any railroad or other entity subject to the provisions of this subpart shall make reasonable efforts to supply manufacturers and remanufacturers of locomotives and locomotive engines with the test locomotives and locomotive engines needed to fulfill the in-use testing requirements contained in subpart G of this part.

§ 92.1006 Refueling requirements.

(a) Refueling equipment used by a locomotive operator for locomotives fueled with a volatile fuel shall be designed in such a manner so as not to render inoperative or reduce the effectiveness of the controls on the locomotive that are intended to minimize the escape of fuel vapors.

(b) Hoses used to refuel gaseous-fueled locomotives shall not be designed to be bled or vented to the atmosphere under normal operating conditions.

Subpart L—General Enforcement Provisions and Prohibited Acts

§ 92.1101 Applicability.

The requirements of this subpart are applicable to all manufacturers, remanufacturers, owners and operators of locomotives and locomotive engines subject to the provisions of subpart A of this part.

§ 92.1102 Definitions.

The definitions of subpart A of this part apply to this subpart.

§ 92.1103 Prohibited acts.

(a) The following acts and the causing thereof are prohibited:

(1)(i)(A) In the case of a manufacturer or remanufacturer of new locomotives or new locomotive engines, the sale, the offering for sale, the introduction into commerce, the delivery for introduction into commerce, or the distribution in commerce of any new locomotive or new locomotive engine manufactured or remanufactured after the effective date of applicable emission standards under this part, unless such locomotive or locomotive engine is covered by a certificate of conformity issued (and in effect) under regulations found in this part. (Introduction into commerce includes placement of a new locomotive or new locomotive engine back into service following remanufacturing.)

(B) The manufacture or remanufacture of a locomotive or locomotive engine for the purpose of an act listed in paragraph (a)(1)(i)(A) of this section unless such locomotive or locomotive engine is covered by a certificate of conformity issued (and in effect) under regulations found in this part prior to its introduction into commerce.

(ii) In the case of any person, except as provided in Subpart I of this part, the importation into the United States of any locomotive or locomotive engine manufactured or remanufactured after June 15, 1998, unless such locomotive or locomotive engine is covered by a certificate of conformity issued (and in effect) under regulations found in this part.

(2)(i) For a person to fail or refuse to permit access to or copying of records or to fail to make reports or provide information required under this part.

(ii) For a person to fail or refuse to permit entry, testing, or inspection authorized under this part.

(iii) For a person to fail or refuse to perform tests, or to have tests performed as required by this part.

(iv) For a person to fail to establish or maintain records as required under this part.

(3)(i) For a person to remove or render inoperative a device or element of design installed on or in a locomotive or locomotive engine in compliance with regulations under this part,

or to set any adjustable parameter to a setting outside of the range specified by the manufacturer or remanufacturer, as approved in the application for certification by the Administrator.

(ii) For a person to manufacture, remanufacture, sell or offer to sell, or install, a part or component intended for use with, or as part of, a locomotive or locomotive engine, where a principal effect of the part or component is to bypass, defeat, or render inoperative a device or element of design installed on or in a locomotive or locomotive engine in compliance with regulations issued under this part, and where the person knows or should know that the part or component is being offered for sale or installed for this use or put to such use.

(iii) For a locomotive owner or operator to fail to comply with the maintenance and repair requirements of §92.1004.

(4) For a manufacturer or a remanufacturer of a new locomotive or locomotive engine subject to standards prescribed under this part:

(i) To sell, offer for sale, or introduce or deliver for introduction into commerce, a new locomotive or new locomotive engine unless the manufacturer or remanufacturer has complied with the requirements of §92.1107.

(ii) To sell, offer for sale, or introduce or deliver for introduction into commerce, a new locomotive or new locomotive engine unless all required labels and tags are affixed to the engine in accordance with §92.212.

(iii) To fail or refuse to comply with the requirements of §92.1108.

(iv) Except as provided in §92.211, to provide directly or indirectly in any communication to the ultimate purchaser or a subsequent purchaser that the coverage of a warranty under the Act is conditioned upon use of a part, component, or system manufactured by the manufacturer or remanufacturer or a person acting for the manufacturer or remanufacturer or under its control, or conditioned upon service performed by such persons.

(v) To fail or refuse to comply with the terms and conditions of the warranty under §92.1107.

(5) For a manufacturer or remanufacturer of locomotives to distribute in commerce, sell, offer for sale, or deliver for introduction into commerce new locomotives (including all locomotives which contain a new engine) not covered by a certificate of conformity.

(b) For the purposes of enforcement of this part, the following apply:

(1) Nothing in paragraph (a)(3) of this section is to be construed to require the use of any manufacturer's or remanufacturer's parts in maintaining or repairing a locomotive or locomotive engine.

(2) Actions for the purpose of repair or replacement of a device or element of design or any other item are not considered prohibited acts under paragraph (a)(3)(i) of this section if the action is a necessary and temporary procedure, the device or element is replaced upon completion of the procedure, and the action results in the proper functioning of the device or element of design.

(3) Actions for the purpose of remanufacturing a locomotive are not considered prohibited acts under paragraph (a)(3)(i) of this section if the new remanufactured locomotive is covered by a certificate of conformity and complies with all applicable requirements of this part.

§92.1104 General enforcement provisions.

(a) *Information collection provisions.* (1)(i) Every manufacturer or remanufacturer of new locomotives and/or new locomotive engines and other persons subject to the requirements of this part must establish and maintain records, perform tests, make reports and provide information the Administrator may reasonably require to determine whether the manufacturer or remanufacturer or other person has acted or is acting in compliance with this part or to otherwise carry out the provisions of this part, and must, upon request of an officer or employee duly designated by the Administrator, permit the officer or employee at reasonable times to have access to and copy such records. The manufacturer or remanufacturer shall comply in all respects with the requirements of subpart E of this part.

(ii) Every manufacturer, remanufacturer, owner, or operator of locomotives or locomotive engines exempted from the standards or requirements of this part must establish and maintain records, perform tests, make reports and provide information the Administrator may reasonably require regarding the emissions of such locomotives or locomotive engines.

(2) For purposes of enforcement of this part, an officer or employee duly designated by the Administrator, upon presenting appropriate credentials, is authorized:

(i) To enter, at reasonable times, any establishment of the manufacturer or remanufacturer, or of any person whom the manufacturer or remanufacturer engaged to perform any activity required under paragraph (a)(1) of this section, for the purposes of inspecting or observing any activity conducted pursuant to paragraph (a)(1) of this section; and

(ii) To inspect records, files, papers, processes, controls, and facilities used in performing an activity required by paragraph (a)(1) of this section, by the manufacturer or remanufacturer or by a person whom the manufacturer or remanufacturer engaged to perform the activity.

(b) *Exemption provision*. The Administrator may exempt a new locomotive or new locomotive engine from § 92.1103 upon such terms and conditions as the Administrator may find necessary for the purpose of export, research, investigations, studies, demonstrations, or training, or for reasons of national security, or for other purposes allowed by subpart J of this part.

(c) *Importation provision*. (1) A new locomotive or locomotive engine, offered for importation or imported by a person in violation of § 92.1103 is to be refused admission into the United States, but the Secretary of the Treasury and the Administrator may, by joint regulation, provide for deferring a final determination as to admission and authorizing the delivery of such a locomotive or locomotive engine offered for import to the owner or consignee thereof upon such terms and conditions (including the furnishing of a bond) as may appear to them appropriate to insure that the locomotive or locomotive engine will be brought into conformity with the standards, requirements, and limitations applicable to it under this part.

(2) If a locomotive or locomotive engine is finally refused admission under this paragraph (c), the Secretary of the Treasury shall cause disposition thereof in accordance with the customs laws unless it is exported, under regulations prescribed by the Secretary, within 90 days of the date of notice of the refusal or additional time as may be permitted pursuant to the regulations.

(3) Disposition in accordance with the customs laws may not be made in such manner as may result, directly or indirectly, in the sale, to the ultimate consumer, of a new locomotive or locomotive engine that fails to comply with applicable standards of the Administrator under this part.

(d) *Export provision*. A new locomotive or locomotive engine intended solely for export, and so labeled or tagged on the outside of the container if used and on the engine, shall be subject to the provisions of § 92.1103, except that if the country that is to receive the locomotive or locomotive engine has emission standards that differ from the standards prescribed under subpart A of this part, then the locomotive or locomotive engine must comply with the standards of the country that is to receive the locomotive or locomotive engine.

(e) *Recordkeeping*. Except where specified otherwise, records required by this part must be kept for eight (8) years.

§ 92.1105 Injunction proceedings for prohibited acts.

(a) The district courts of the United States have jurisdiction to restrain violations of § 92.1103(a).

(b) Actions to restrain violations of § 92.1103(a) must be brought by and in the name of the United States. In an action, subpoenas for witnesses who are required to attend a district court in any district may run into any other district.

§ 92.1106 Penalties.

(a) *Violations*. A violation of the requirements of this subpart is a violation of the applicable provisions of the Act, including sections 213(d) and 203,

and is subject to the penalty provisions thereunder.

(1) A person who violates §92.1103 (a)(1), (a)(4), or (a)(5), or a manufacturer, remanufacturer, dealer or railroad who violates §92.1103(a)(3)(i) or (iii) is subject to a civil penalty of not more than $25,000 for each violation unless modified by the Debt Collection Improvement Act (31 U.S.C. 3701 *et seq.*) and/or regulations issued thereunder.

(2) A person other than a manufacturer, remanufacturer, dealer, or railroad who violates §92.1103(a)(3)(i) or any person who violates §92.1103(a)(3)(ii) is subject to a civil penalty of not more than $2,500 for each violation unless modified by the Debt Collection Improvement Act and/or regulations issued thereunder.

(3) A violation with respect to §92.1103(a)(1), (a)(3)(i), (a)(3)(iii), (a)(4), or (a)(5) constitutes a separate offense with respect to each locomotive or locomotive engine.

(4) A violation with respect to §92.1103(a)(3)(ii) constitutes a separate offense with respect to each part or component. Each day of a violation with respect to §92.1103(a)(5) constitutes a separate offense.

(5) A person who violates §92.1103(a)(2) or (a)(5) is subject to a civil penalty of not more than $25,000 per day of violation unless modified by the Debt Collection Improvement Act and/or regulations issued thereunder.

(b) *Civil actions.* The Administrator may commence a civil action to assess and recover any civil penalty under paragraph (a) of this section.

(1) An action under this paragraph (b) may be brought in the district court of the United States for the district in which the defendant resides or has the Administrator's principal place of business, and the court has jurisdiction to assess a civil penalty.

(2) In determining the amount of a civil penalty to be assessed under this paragraph (b), the court is to take into account the gravity of the violation, the economic benefit or savings (if any) resulting from the violation, the size of the violator's business, the violator's history of compliance with Title II of the Act, action taken to remedy the violation, the effect of the penalty on the violator's ability to continue in business, and such other matters as justice may require.

(3) In any such action, subpoenas for witnesses who are required to attend a district court in any district may run into any other district.

(c) *Administrative assessment of certain penalties.* (1) *Administrative penalty authority.* In lieu of commencing a civil action under paragraph (b) of this section, the Administrator may assess any civil penalty prescribed in paragraph (a) of this section, except that the maximum amount of penalty sought against each violator in a penalty assessment proceeding shall not exceed $200,000, unless the Administrator and the Attorney General jointly determine that a matter involving a larger penalty amount is appropriate for administrative penalty assessment. Any such determination by the Administrator and the Attorney General is not subject to judicial review. Assessment of a civil penalty shall be by an order made on the record after opportunity for a hearing held in accordance with the procedures found at part 22 of this chapter. The Administrator may compromise, or remit, with or without conditions, any administrative penalty which may be imposed under this section.

(2) *Determining amount.* In determining the amount of any civil penalty assessed under this paragraph (c), the Administrator shall take into account the gravity of the violation, the economic benefit or savings (if any) resulting from the violation, the size of the violator's business, the violator's history of compliance with Title II of the Act, action taken to remedy the violation, the effect of the penalty on the violator's ability to continue in business, and such other matters as justice may require.

(3) *Effect of administrator's action.* (i) Action by the Administrator under this paragraph (c) does not affect or limit the Administrator's authority to enforce any provisions of the Act; except that any violation with respect to which the Administrator has commenced and is diligently prosecuting an action under this paragraph (c), or for which the Administrator has issued a final order not subject to further judicial review and for which the violator

has paid a penalty assessment under this paragraph shall not be the subject of a civil penalty action under paragraph (b) of this section.

(ii) No action by the Administrator under this paragraph (c) shall affect a person's obligation to comply with a section of this part.

(4) *Finality of order*. An order issued under this paragraph (c) is to become final 30 days after its issuance unless a petition for judicial review is filed under paragraph (c)(5) of this section.

(5) *Judicial review*. A person against whom a civil penalty is assessed in accordance with this paragraph (c) may seek review of the assessment in the United States District Court for the District of Columbia or for the district in which the violation is alleged to have occurred, in which such person resides, or where the person's principal place of business is located, within the 30-day period beginning on the date a civil penalty order is issued. The person shall simultaneously send a copy of the filing by certified mail to the Administrator and the Attorney General. The Administrator shall file in the court within 30 days a certified copy, or certified index, as appropriate, of the record on which the order was issued. The court is not to set aside or remand any order issued in accordance with the requirements of this paragraph (c) unless substantial evidence does not exist in the record, taken as a whole, to support the finding of a violation or unless the Administrator's assessment of the penalty constitutes an abuse of discretion, and the court is not to impose additional civil penalties unless the Administrator's assessment of the penalty constitutes an abuse of discretion. In any proceedings, the United States may seek to recover civil penalties assessed under this section.

(6) *Collection*. (i) If any person fails to pay an assessment of a civil penalty imposed by the Administrator as provided in this part after the order making the assessment has become final or after a court in an action brought under paragraph (c)(5) of this section has entered a final judgment in favor of the Administrator, the Administrator shall request that the Attorney General bring a civil action in an appropriate district court to recover the amount assessed (plus interest at rates established pursuant to section 6621(a)(2) of the Internal Revenue Code of 1986 (26 U.S.C. 6621(a)(2)) from the date of the final order or the date of final judgment, as the case may be). In such an action, the validity, amount, and appropriateness of the penalty is not subject to review.

(ii) A person who fails to pay on a timely basis the amount of an assessment of a civil penalty as described in paragraph (c)(6)(i) of this section shall be required to pay, in addition to that amount and interest, the United States' enforcement expenses, including attorney's fees and costs for collection proceedings, and a quarterly nonpayment penalty for each quarter during which the failure to pay persists. The nonpayment penalty is an amount equal to ten percent of the aggregate amount of that person's penalties and nonpayment penalties which are unpaid as of the beginning of such quarter.

§ 92.1107 Warranty provisions.

(a) The manufacturer or remanufacturer of each locomotive or locomotive engine must warrant to the ultimate purchaser and each subsequent purchaser or owner that the locomotive or locomotive engine is designed, built, and equipped so as to conform at the time of sale or time of return to service following remanufacture with applicable regulations under section 213 of the Act, and is free from defects in materials and workmanship which cause such locomotive or locomotive engine to fail to conform with applicable regulations for its warranty period (as determined under § 92.10).

(b) For the purposes of this section, the owner of any locomotive or locomotive engine warranted under this part is responsible for the proper maintenance of the locomotive and the locomotive engine. Proper maintenance includes replacement and/or service, as needed, at the owner's expense at a service establishment or facility of the owner's choosing, of all parts, items, or devices which were in general use with locomotives or locomotive engines prior to 1999. For diesel engines, this would generally include replacement or

cleaning of the fuel delivery and injection system.

§92.1108 In-use compliance provisions.

(a) Effective with respect to locomotives and locomotive engines subject to the requirements of this part:

(1) If the Administrator determines that a substantial number of any class or category of locomotives or locomotive engines, although properly maintained and used, do not conform to the regulations prescribed under section 213 of the Act when in actual use throughout their useful life period (as defined under §92.2), the Administrator shall immediately notify the manufacturer or remanufacturer of such nonconformity and require the manufacturer or remanufacturer to submit a plan for remedying the nonconformity of the locomotives or locomotive engines with respect to which such notification is given.

(i) The manufacturer's or remanufacturer's plan shall provide that the nonconformity of any such locomotives or locomotive engines which are properly used and maintained will be remedied at the expense of the manufacturer or remanufacturer.

(ii) If the manufacturer or remanufacturer disagrees with such determination of nonconformity and so advises the Administrator, the Administrator shall afford the manufacturer or remanufacturer and other interested persons an opportunity to present their views and evidence in support thereof at a public hearing. Unless, as a result of such hearing, the Administrator withdraws such determination of nonconformity, the Administrator shall, within 60 days after the completion of such hearing, order the manufacturer or remanufacturer to provide prompt notification of such nonconformity in accordance with paragraph (a)(2) of this section. The manufacturer or remanufacturer shall comply in all respects with the requirements of subpart G of this part.

(2) Any notification required to be given by the manufacturer or remanufacturer under paragraph (a)(1) of this section with respect to any class or category of locomotives or locomotive engines shall be given to ultimate purchasers, subsequent purchasers (if known), and dealers (as applicable) in such manner and containing such information as required in Subparts E and H of this part.

(3)(i) The certifying manufacturer or remanufacturer shall furnish with each new locomotive or locomotive engine written instructions for the proper maintenance and use of the engine by the ultimate purchaser as required under §92.211.

(ii) The instruction under paragraph (a)(3)(i) of this section must not include any condition on the ultimate purchaser's using, in connection with such locomotive or locomotive engine, any component or service (other than a component or service provided without charge under the terms of the purchase agreement) which is identified by brand, trade, or corporate name. Such instructions also must not directly or indirectly distinguish between service performed by the franchised dealers of such manufacturer or remanufacturer, or any other service establishments with which such manufacturer or remanufacturer has a commercial relationship, and service performed by independent locomotive or locomotive engine repair facilities with which such manufacturer or remanufacturer has no commercial relationship.

(iii) The prohibition of paragraph (a)(3)(ii) of this section may be waived by the Administrator if:

(A) The manufacturer or remanufacturer satisfies the Administrator that the locomotive or locomotive engine will function properly only if the component or service so identified is used in connection with such engine; and

(B) The Administrator finds that such a waiver is in the public interest.

(iv) In addition, the manufacturer or remanufacturer shall indicate by means of a label or tag permanently affixed to the locomotive and to the engine that the locomotive and/or the locomotive engine is covered by a certificate of conformity issued for the purpose of assuring achievement of emission standards prescribed under section 213 of the Act. This label or tag shall also contain information relating to control of emissions as prescribed under §92.212.

(b) The manufacturer or remanufacturer bears all cost obligation any

dealer incurs as a result of a requirement imposed by paragraph (a) of this section. The transfer of any such cost obligation from a manufacturer or remanufacturer to a dealer through franchise or other agreement is prohibited.

(c) If a manufacturer or remanufacturer includes in an advertisement a statement respecting the cost or value of emission control devices or systems, the manufacturer or remanufacturer shall set forth in the statement the cost or value attributed to these devices or systems by the Secretary of Labor (through the Bureau of Labor Statistics). The Secretary of Labor, and his or her representatives, has the same access for this purpose to the books, documents, papers, and records of a manufacturer or remanufacturer as the Comptroller General has to those of a recipient of assistance for purposes of section 311 of the Act.

APPENDIX I TO PART 92—EMISSION RELATED LOCOMOTIVE AND ENGINE PARAMETERS AND SPECIFICATIONS

I. Basic Engine Parameters—Reciprocating Engines.
  1. Compression ratio.
  2. Type of air aspiration (natural, Roots blown, supercharged, turbocharged).
  3. Valves (intake and exhaust).
    a. Head diameter dimension.
    b. Valve lifter or actuator type and valve lash dimension.
  4. Camshaft timing.
    a. Valve opening—intake exhaust (degrees from TDC or BDC).
    b. Valve closing—intake exhaust (degrees from TDC or BDC).
    c. Valve overlap (degrees).
  5. Ports—two stroke engines (intake and/or exhaust).
    a. Flow area.
    b. Opening timing (degrees from TDC or BDC).
    c. Closing timing (degrees from TDC or BDC).
II. Intake Air System.
  1. Roots blower/supercharger/turbocharger calibration.
  2. Charge air cooling.
    a. Type (air-to-air; air-to-liquid).
    b. Type of liquid cooling (engine coolant, dedicated cooling system).
    c. Performance (charge air delivery temperature (°F) at rated power and one other power level under ambient conditions of 80 °F and 110 °F, and 3 minutes and 15 minutes after selecting rated power, and 3 minutes and 5 minutes after selecting other power level).
  3. Temperature control system calibration.
  4. Maximum allowable inlet air restriction.
III. Fuel System.
  1. General.
    a. Engine idle speed.
  2. Carburetion.
    a. Air-fuel flow calibration.
    b. Idle mixture.
    c. Transient enrichment system calibration.
    d. Starting enrichment system calibration.
    e. Altitude compensation system calibration.
    f. Hot idle compensation system calibration.
  3. Fuel injection—non-compression ignition engines.
    a. Control parameters and calibrations.
    b. Idle mixture.
    c. Fuel shutoff system calibration.
    d. Starting enrichment system calibration.
    e. Transient enrichment system calibration.
    f. Air-fuel flow calibration.
    g. Altitude compensation system calibration.
    h. Operating pressure(s).
    i. Injector timing calibration.
  4. Fuel injection—compression ignition engines.
    a. Control parameters and calibrations.
    b. Transient enrichment system calibration.
    c. Air-fuel flow calibration.
    d. Altitude compensation system calibration.
    e. Operating pressure(s).
    f. Injector timing calibration.
IV. Ignition System—non-compression ignition engines.
  1. Control parameters and calibration.
  2. Initial timing setting.
  3. Dwell setting.
  4. Altitude compensation system calibration.
  5. Spark plug voltage.
V. Engine Cooling System.
  1. Thermostat calibration.
VI. Exhaust System.
  1. Maximum allowable back pressure.
VII. Exhaust Emission Control System.
  1. Air injection system.
    a. Control parameters and calibrations.
    b. Pump flow rate.
  2. EGR system.
    a. Control parameters and calibrations.
    b. EGR valve flow calibration.
  3. Catalytic converter system.
    a. Active surface area.
    b. Volume of catalyst.
    c. Conversion efficiency.
  4. Backpressure.
VIII. Crankcase Emission Control System.
  1. Control parameters and calibrations.
  2. Valve calibrations.

IX. Auxiliary Emission Control Devices (AECD).
1. Control parameters and calibrations.
2. Component calibration(s).
X. Evaporative Emission Control System.
1. Control parameters and calibrations.
2. Fuel tank.
a. Volume.
b. Pressure and vacuum relief settings.

APPENDIX II TO PART 92—INTERPRETIVE RULING FOR § 92.705—REMEDIAL PLANS

The following is an interpretive ruling set forth previously by EPA for on-highway vehicles. EPA expects to apply the same principles to locomotives.

(1) The purpose of this ruling is to set forth EPA's interpretation regarding one aspect of a motor vehicle or motor vehicle engine manufacturer's recall liability under section 207(c)(1) of the Clean Air Act, 42 U.S.C. 7641(c)(1). This ruling will provide guidance to vehicle and engine manufacturers to better enable them to submit acceptable remedial plans.

(2) Section 207(c)(1) requires the Administrator to base a recall order on a determination that a substantial number of in-use vehicles or engines within a given class or category of vehicles or engines, although properly maintained and used, fail to conform to the regulations prescribed under section 202 when in actual use throughout their useful lives. After making such a determination, he shall require the manufacturer to submit a plan to remedy the nonconformity of any such vehicles or engines. The plan shall provide that the manufacturer will remedy, at the manufacturer's expense, all properly maintained and used vehicles which experienced the nonconformity during their useful lives regardless of their age or mileage at the time of repair.

APPENDIX III TO PART 92—SMOKE STANDARDS FOR NON-NORMALIZED MEASUREMENTS

TABLE III–1—EQUIVALENT SMOKE STANDARDS FOR NON-NORMALIZED MEASUREMENTS

Path length		Standards				
If the path length is:		Then the opacity may not exceed:				
cm	inches	Peak		Steady-State		
		3-sec	30-sec	Tier 0	Tier 1	Tier 2
10.0–19.9	3.94–7.86	7	5	4	3	2
20.0–29.9	7.87–11.80	13	10	7	6	4
30.0–39.9	11.81–15.74	19	14	10	8	6
40.0–49.9	15.75–19.68	24	18	13	11	9
50.0–59.9	19.69–23.61	29	23	16	13	11
60.0–69.9	23.62–27.55	34	26	19	16	13
70.0–79.9	27.56–31.49	38	30	22	18	14
80.0–89.9	31.50–35.42	43	34	25	21	16
90.0–99.9	35.43–39.36	46	37	27	23	18
100.0–109.9	39.37–43.30	50	40	30	25	20
110.0–119.9	43.31–47.23	53	43	32	27	22
120.0–129.9	47.24–51.17	56	46	35	29	23
130.0–139.9	51.18–55.11	59	49	37	31	25
140.0–149.9	55.12–59.05	62	51	39	33	27
150.0–159.9	59.06–62.98	65	54	41	35	28
160.0–169.9	62.99–66.92	67	56	43	37	30
170.0–179.9	66.93–70.86	69	58	45	39	32
180.0–189.9	70.87–74.79	71	60	47	40	33
190.0–199.9	74.80–78.73	73	62	49	42	35
≥200	≥78.74	75	64	51	44	36

APPENDIX IV TO PART 92—GUIDELINES FOR DETERMINING EQUIVALENCY BETWEEN EMISSION MEASUREMENT SYSTEMS

This appendix describes a series of correlation criteria that EPA considers to be reasonable for the purpose of demonstrating equivalency between two test systems designed to measure the same emissions during FTP locomotive testing. These criteria are presented here only as guidelines. When requested to make a finding of equivalency, EPA could base its decision on criteria other than those listed here, where EPA has reason to believe that these criteria are not appropriate.

(a) *General approach.* (1) Multiple tests should be conducted in pairs on the same locomotive or engine using each of the measurement systems.

(2) Variations for other parameters, such as test fuel, should be minimized to the maximum extent possible.

(3) Locomotive and/or locomotive engine tests conducted in accordance with the provisions of Subpart B of this part are preferred. Where appropriate, engine tests conducted in accordance with 40 CFR part 89 may also be used.

(4) Equivalency of the systems should be determined by comparing individual modal data, individual cycle-weighted data, and the average cycle-weighted results from each system.

(b) *Correlation criteria for particulate measurements.* (1) The correlation coefficient (R^2) for individual modal data should be 0.90, or higher.

(2) The maximum deviation between any pair of cycle-weighted data should be 15 percent, or less.

(3) The ratio of average cycle-weighted results using the alternate system to the average cycle-weighted results using the specified Part 92 system (i.e., avg_{alt}/avg_{spc}) should be between 0.97 and 1.05.

(c) *Correlation criteria for other measurements.* Correlation parameters for gaseous pollutants should be better than those specified in paragraph (b) of this appendix for particulate measurements.

(d) *Minimum number of tests.* The recommended minimum number of tests with each system necessary to determine equivalency is:

(1) Four 13-mode locomotive or locomotive engine tests, conducted in accordance with the provisions of subpart B of this part; or

(2) Seven 8-mode nonroad engine tests, conducted in accordance with the provisions of 40 CFR part 89.

(e) *Statistical outliers.* Statistical outliers may be excluded consistent with good engineering judgement. Outliers should be replaced by rerunning each excluded test point. Where more than one outlier is excluded, is recommended to perform one additional pair of tests (in addition to the minimum number specified in paragraph (d) of this appendix) for each two outliers excluded.

PART 93—DETERMINING CONFORMITY OF FEDERAL ACTIONS TO STATE OR FEDERAL IMPLEMENTATION PLANS

Subpart A—Conformity to State or Federal Implementation Plans of Transportation Plans, Programs, and Projects Developed, Funded or Approved Under Title 23 U.S.C. or the Federal Transit Laws

Sec.
93.100 Purpose.
93.101 Definitions.
93.102 Applicability.
93.103 Priority.
93.104 Frequency of conformity determinations.
93.105 Consultation.
93.106 Content of transportation plans.
93.107 Relationship of transportation plan and TIP conformity with the NEPA process.
93.108 Fiscal constraints for transportation plans and TIPs.
93.109 Criteria and procedures for determining conformity of transportation plans, programs, and projects: General.
93.110 Criteria and procedures: Latest planning assumptions.
93.111 Criteria and procedures: Latest emissions model.
93.112 Criteria and procedures: Consultation.
93.113 Criteria and procedures: Timely implementation of TCMs.
93.114 Criteria and procedures: Currently conforming transportation plan and TIP.
93.115 Criteria and procedures: Projects from a plan and TIP.
93.116 Criteria and procedures: Localized CO and PM_{10} violations (hot spots).
93.117 Criteria and procedures: Compliance with PM_{10} control measures.
93.118 Criteria and procedures: Motor vehicle emissions budget.
93.119 Criteria and procedures: Emission reductions in areas without motor vehicle emissions budgets.
93.120 Consequences of control strategy implementation plan failures.
93.121 Requirements for adoption or approval of projects by other recipients of funds designated under title 23 U.S.C. or the Federal Transit Laws.
93.122 Procedures for determining regional transportation-related emissions.
93.123 Procedures for determining localized CO and PM_{10} concentrations (hot-spot analysis).
93.124 Using the motor vehicle emissions budget in the applicable implementation plan (or implementation plan submission).
93.125 Enforceability of design concept and scope and project-level mitigation and control measures.
93.126 Exempt projects.
93.127 Projects exempt from regional emissions analyses.
93.128 Traffic signal synchronization projects.
93.129 Special exemptions from conformity requirements for pilot program areas.

Subpart B—Determining Conformity of General Federal Actions to State or Federal Implementation Plans

93.150 Prohibition.
93.151 State implementation plan (SIP) revision.
93.152 Definitions.

93.153 Applicability.
93.154 Conformity analysis.
93.155 Reporting requirements.
93.156 Public participation.
93.157 Frequency of conformity determinations.
93.158 Criteria for determining conformity of general Federal actions.
93.159 Procedures for conformity determinations of general Federal actions.
93.160 Mitigation of air quality impacts.

AUTHORITY: 42 U.S.C. 7401–7671q.

SOURCE: 58 FR 62235, Nov. 24, 1993, unless otherwise noted.

Subpart A—Conformity to State or Federal Implementation Plans of Transportation Plans, Programs, and Projects Developed, Funded or Approved Under Title 23 U.S.C. or the Federal Transit Laws

SOURCE: 62 FR 43801, Aug. 15, 1997, unless otherwise noted.

§ 93.100 Purpose.

The purpose of this subpart is to implement section 176(c) of the Clean Air Act (CAA), as amended (42 U.S.C. 7401 *et seq.*), and the related requirements of 23 U.S.C. 109(j), with respect to the conformity of transportation plans, programs, and projects which are developed, funded, or approved by the United States Department of Transportation (DOT), and by metropolitan planning organizations (MPOs) or other recipients of funds under title 23 U.S.C. or the Federal Transit Laws (49 U.S.C. Chapter 53). This subpart sets forth policy, criteria, and procedures for demonstrating and assuring conformity of such activities to an applicable implementation plan developed pursuant to section 110 and Part D of the CAA.

§ 93.101 Definitions.

Terms used but not defined in this subpart shall have the meaning given them by the CAA, titles 23 and 49 U.S.C., other Environmental Protection Agency (EPA) regulations, or other DOT regulations, in that order of priority.

Applicable implementation plan is defined in section 302(q) of the CAA and means the portion (or portions) of the implementation plan, or most recent revision thereof, which has been approved under section 110, or promulgated under section 110(c), or promulgated or approved pursuant to regulations promulgated under section 301(d) and which implements the relevant requirements of the CAA.

CAA means the Clean Air Act, as amended (42 U.S.C. 7401 *et seq.*).

Cause or contribute to a new violation for a project means:

(1) To cause or contribute to a new violation of a standard in the area substantially affected by the project or over a region which would otherwise not be in violation of the standard during the future period in question, if the project were not implemented; or

(2) To contribute to a new violation in a manner that would increase the frequency or severity of a new violation of a standard in such area.

Clean data means air quality monitoring data determined by EPA to meet the requirements of 40 CFR part 58 that indicate attainment of the national ambient air quality standard.

Control strategy implementation plan revision is the implementation plan which contains specific strategies for controlling the emissions of and reducing ambient levels of pollutants in order to satisfy CAA requirements for demonstrations of reasonable further progress and attainment (CAA sections 182(b)(1), 182(c)(2)(A), 182(c)(2)(B), 187(a)(7), 189(a)(1)(B), and 189(b)(1)(A); and sections 192(a) and 192(b), for nitrogen dioxide).

Design concept means the type of facility identified by the project, e.g., freeway, expressway, arterial highway, grade-separated highway, reserved right-of-way rail transit, mixed-traffic rail transit, exclusive busway, etc.

Design scope means the design aspects which will affect the proposed facility's impact on regional emissions, usually as they relate to vehicle or person carrying capacity and control, e.g., number of lanes or tracks to be constructed or added, length of project, signalization, access control including approximate number and location of interchanges, preferential treatment for high-occupancy vehicles, etc.

DOT means the United States Department of Transportation.

EPA means the Environmental Protection Agency.

FHWA means the Federal Highway Administration of DOT.

FHWA/FTA project, for the purpose of this subpart, is any highway or transit project which is proposed to receive funding assistance and approval through the Federal-Aid Highway program or the Federal mass transit program, or requires Federal Highway Administration (FHWA) or Federal Transit Administration (FTA) approval for some aspect of the project, such as connection to an interstate highway or deviation from applicable design standards on the interstate system.

Forecast period with respect to a transportation plan is the period covered by the transportation plan pursuant to 23 CFR part 450.

FTA means the Federal Transit Administration of DOT.

Highway project is an undertaking to implement or modify a highway facility or highway-related program. Such an undertaking consists of all required phases necessary for implementation. For analytical purposes, it must be defined sufficiently to:

(1) Connect logical termini and be of sufficient length to address environmental matters on a broad scope;

(2) Have independent utility or significance, i.e., be usable and be a reasonable expenditure even if no additional transportation improvements in the area are made; and

(3) Not restrict consideration of alternatives for other reasonably foreseeable transportation improvements.

Horizon year is a year for which the transportation plan describes the envisioned transportation system according to § 93.106.

Hot-spot analysis is an estimation of likely future localized CO and PM_{10} pollutant concentrations and a comparison of those concentrations to the national ambient air quality standards. Hot-spot analysis assesses impacts on a scale smaller than the entire nonattainment or maintenance area, including, for example, congested roadway intersections and highways or transit terminals, and uses an air quality dispersion model to determine the effects of emissions on air quality.

Increase the frequency or severity means to cause a location or region to exceed a standard more often or to cause a violation at a greater concentration than previously existed and/or would otherwise exist during the future period in question, if the project were not implemented.

Lapse means that the conformity determination for a transportation plan or TIP has expired, and thus there is no currently conforming transportation plan and TIP.

Maintenance area means any geographic region of the United States previously designated nonattainment pursuant to the CAA Amendments of 1990 and subsequently redesignated to attainment subject to the requirement to develop a maintenance plan under section 175A of the CAA, as amended.

Maintenance plan means an implementation plan under section 175A of the CAA, as amended.

Metropolitan planning organization (MPO) is that organization designated as being responsible, together with the State, for conducting the continuing, cooperative, and comprehensive planning process under 23 U.S.C. 134 and 49 U.S.C. 5303. It is the forum for cooperative transportation decision-making.

Milestone has the meaning given in sections 182(g)(1) and 189(c) of the CAA. A milestone consists of an emissions level and the date on which it is required to be achieved.

Motor vehicle emissions budget is that portion of the total allowable emissions defined in the submitted or approved control strategy implementation plan revision or maintenance plan for a certain date for the purpose of meeting reasonable further progress milestones or demonstrating attainment or maintenance of the NAAQS, for any criteria pollutant or its precursors, allocated to highway and transit vehicle use and emissions.

National ambient air quality standards (NAAQS) are those standards established pursuant to section 109 of the CAA.

NEPA means the National Environmental Policy Act of 1969, as amended (42 U.S.C. 4321 *et seq.*).

NEPA process completion, for the purposes of this subpart, with respect to FHWA or FTA, means the point at

which there is a specific action to make a determination that a project is categorically excluded, to make a Finding of No Significant Impact, or to issue a record of decision on a Final Environmental Impact Statement under NEPA.

Nonattainment area means any geographic region of the United States which has been designated as nonattainment under section 107 of the CAA for any pollutant for which a national ambient air quality standard exists.

Project means a highway project or transit project.

Protective finding means a determination by EPA that a submitted control strategy implementation plan revision contains adopted control measures or written commitments to adopt enforceable control measures that fully satisfy the emissions reductions requirements relevant to the statutory provision for which the implementation plan revision was submitted, such as reasonable further progress or attainment.

Recipient of funds designated under title 23 U.S.C. or the Federal Transit Laws means any agency at any level of State, county, city, or regional government that routinely receives title 23 U.S.C. or Federal Transit Laws funds to construct FHWA/FTA projects, operate FHWA/FTA projects or equipment, purchase equipment, or undertake other services or operations via contracts or agreements. This definition does not include private landowners or developers, or contractors or entities that are only paid for services or products created by their own employees.

Regionally significant project means a transportation project (other than an exempt project) that is on a facility which serves regional transportation needs (such as access to and from the area outside of the region, major activity centers in the region, major planned developments such as new retail malls, sports complexes, etc., or transportation terminals as well as most terminals themselves) and would normally be included in the modeling of a metropolitan area's transportation network, including at a minimum all principal arterial highways and all fixed guideway transit facilities that offer an alternative to regional highway travel.

Safety margin means the amount by which the total projected emissions from all sources of a given pollutant are less than the total emissions that would satisfy the applicable requirement for reasonable further progress, attainment, or maintenance.

Standard means a national ambient air quality standard.

Transit is mass transportation by bus, rail, or other conveyance which provides general or special service to the public on a regular and continuing basis. It does not include school buses or charter or sightseeing services.

Transit project is an undertaking to implement or modify a transit facility or transit-related program; purchase transit vehicles or equipment; or provide financial assistance for transit operations. It does not include actions that are solely within the jurisdiction of local transit agencies, such as changes in routes, schedules, or fares. It may consist of several phases. For analytical purposes, it must be defined inclusively enough to:

(1) Connect logical termini and be of sufficient length to address environmental matters on a broad scope;

(2) Have independent utility or independent significance, i.e., be a reasonable expenditure even if no additional transportation improvements in the area are made; and

(3) Not restrict consideration of alternatives for other reasonably foreseeable transportation improvements.

Transportation control measure (TCM) is any measure that is specifically identified and committed to in the applicable implementation plan that is either one of the types listed in section 108 of the CAA, or any other measure for the purpose of reducing emissions or concentrations of air pollutants from transportation sources by reducing vehicle use or changing traffic flow or congestion conditions. Notwithstanding the first sentence of this definition, vehicle technology-based, fuel-based, and maintenance-based measures which control the emissions from vehicles under fixed traffic conditions are not TCMs for the purposes of this subpart.

Transportation improvement program (TIP) means a staged, multiyear, intermodal program of transportation projects covering a metropolitan planning area which is consistent with the metropolitan transportation plan, and developed pursuant to 23 CFR part 450.

Transportation plan means the official intermodal metropolitan transportation plan that is developed through the metropolitan planning process for the metropolitan planning area, developed pursuant to 23 CFR part 450.

Transportation project is a highway project or a transit project.

Written commitment for the purposes of this subpart means a written commitment that includes a description of the action to be taken; a schedule for the completion of the action; a demonstration that funding necessary to implement the action has been authorized by the appropriating or authorizing body; and an acknowledgment that the commitment is an enforceable obligation under the applicable implementation plan.

§ 93.102 Applicability.

(a) *Action applicability*.

(1) Except as provided for in paragraph (c) of this section or § 93.126, conformity determinations are required for:

(i) The adoption, acceptance, approval or support of transportation plans and transportation plan amendments developed pursuant to 23 CFR part 450 or 49 CFR part 613 by an MPO or DOT;

(ii) The adoption, acceptance, approval or support of TIPs and TIP amendments developed pursuant to 23 CFR part 450 or 49 CFR part 613 by an MPO or DOT; and

(iii) The approval, funding, or implementation of FHWA/FTA projects.

(2) Conformity determinations are not required under this subpart for individual projects which are not FHWA/FTA projects. However, § 93.121 applies to such projects if they are regionally significant.

(b) *Geographic applicability*. The provisions of this subpart shall apply in all nonattainment and maintenance areas for transportation-related criteria pollutants for which the area is designated nonattainment or has a maintenance plan.

(1) The provisions of this subpart apply with respect to emissions of the following criteria pollutants: ozone, carbon monoxide (CO), nitrogen dioxide (NO_2), and particles with an aerodynamic diameter less than or equal to a nominal 10 micrometers (PM_{10}).

(2) The provisions of this subpart apply with respect to emissions of the following precursor pollutants:

(i) Volatile organic compounds (VOC) and nitrogen oxides (NO_X) in ozone areas;

(ii) NO_X in NO_2 areas; and

(iii) VOC, NO_X, and PM_{10} in PM_{10} areas if the EPA Regional Administrator or the director of the State air agency has made a finding that transportation-related precursor emissions within the nonattainment area are a significant contributor to the PM_{10} nonattainment problem and has so notified the MPO and DOT, or if the applicable implementation plan (or implementation plan submission) establishes a budget for such emissions as part of the reasonable further progress, attainment or maintenance strategy.

(3) The provisions of this subpart apply to maintenance areas for 20 years from the date EPA approves the area's request under section 107(d) of the CAA for redesignation to attainment, unless the applicable implementation plan specifies that the provisions of this subpart shall apply for more than 20 years.

(c) *Limitations*. (1) Projects subject to this subpart for which the NEPA process and a conformity determination have been completed by DOT may proceed toward implementation without further conformity determinations unless more than three years have elapsed since the most recent major step (NEPA process completion; start of final design; acquisition of a significant portion of the right-of-way; or approval of the plans, specifications and estimates) occurred. All phases of such projects which were considered in the conformity determination are also included, if those phases were for the purpose of funding final design, right-of-way acquisition, construction, or any combination of these phases.

(2) A new conformity determination for the project will be required if there is a significant change in project design concept and scope, if a supplemental environmental document for air quality purposes is initiated, or if three years have elapsed since the most recent major step to advance the project occurred.

[62 FR 43801, Aug. 15, 1997, as amended at 65 FR 18918, Apr. 10, 2000]

§ 93.103 Priority.

When assisting or approving any action with air quality-related consequences, FHWA and FTA shall give priority to the implementation of those transportation portions of an applicable implementation plan prepared to attain and maintain the NAAQS. This priority shall be consistent with statutory requirements for allocation of funds among States or other jurisdictions.

§ 93.104 Frequency of conformity determinations.

(a) Conformity determinations and conformity redeterminations for transportation plans, TIPs, and FHWA/FTA projects must be made according to the requirements of this section and the applicable implementation plan.

(b) *Frequency of conformity determinations for transportation plans.* (1) Each new transportation plan must be demonstrated to conform before the transportation plan is approved by the MPO or accepted by DOT.

(2) All transportation plan revisions must be found to conform before the transportation plan revisions are approved by the MPO or accepted by DOT, unless the revision merely adds or deletes exempt projects listed in § 93.126 or § 93.127. The conformity determination must be based on the transportation plan and the revision taken as a whole.

(3) The MPO and DOT must determine the conformity of the transportation plan no less frequently than every three years. If more than three years elapse after DOT's conformity determination without the MPO and DOT determining conformity of the transportation plan, the existing conformity determination will lapse.

(c) *Frequency of conformity determinations for transportation improvement programs.* (1) A new TIP must be demonstrated to conform before the TIP is approved by the MPO or accepted by DOT.

(2) A TIP amendment requires a new conformity determination for the entire TIP before the amendment is approved by the MPO or accepted by DOT, unless the amendment merely adds or deletes exempt projects listed in § 93.126 or § 93.127.

(3) The MPO and DOT must determine the conformity of the TIP no less frequently than every three years. If more than three years elapse after DOT's conformity determination without the MPO and DOT determining conformity of the TIP, the existing conformity determination will lapse.

(4) After an MPO adopts a new or revised transportation plan, conformity of the TIP must be redetermined by the MPO and DOT within six months from the date of DOT's conformity determination for the transportation plan, unless the new or revised plan merely adds or deletes exempt projects listed in §§ 93.126 and 93.127. Otherwise, the existing conformity determination for the TIP will lapse.

(d) *Projects.* FHWA/FTA projects must be found to conform before they are adopted, accepted, approved, or funded. Conformity must be redetermined for any FHWA/FTA project if three years have elapsed since the most recent major step to advance the project (NEPA process completion; start of final design; acquisition of a significant portion of the right-of-way; or approval of the plans, specifications and estimates) occurred.

(e) *Triggers for transportation plan and TIP conformity determinations.* Conformity of existing transportation plans and TIPs must be redetermined within 18 months of the following, or the existing conformity determination will lapse, and no new project-level conformity determinations may be made until conformity of the transportation plan and TIP has been determined by the MPO and DOT:

(1) November 24, 1993;

(2) The date of the State's initial submission to EPA of each control strategy implementation plan or maintenance plan establishing a motor vehicle emissions budget;

(3) EPA approval of a control strategy implementation plan revision or maintenance plan which establishes or revises a motor vehicle emissions budget;

(4) EPA approval of an implementation plan revision that adds, deletes, or changes TCMs; and

(5) EPA promulgation of an implementation plan which establishes or revises a motor vehicle emissions budget or adds, deletes, or changes TCMs.

§ 93.105 Consultation.

(a) *General.* The implementation plan revision required under § 51.390 of this chapter shall include procedures for interagency consultation (Federal, State, and local), resolution of conflicts, and public consultation as described in paragraphs (a) through (e) of this section. Public consultation procedures will be developed in accordance with the requirements for public involvement in 23 CFR part 450.

(1) The implementation plan revision shall include procedures to be undertaken by MPOs, State departments of transportation, and DOT with State and local air quality agencies and EPA before making conformity determinations, and by State and local air agencies and EPA with MPOs, State departments of transportation, and DOT in developing applicable implementation plans.

(2) Before EPA approves the conformity implementation plan revision required by § 51.390 of this chapter, MPOs and State departments of transportation must provide reasonable opportunity for consultation with State air agencies, local air quality and transportation agencies, DOT, and EPA, including consultation on the issues described in paragraph (c)(1) of this section, before making conformity determinations.

(b) *Interagency consultation procedures: General factors.* (1) States shall provide well-defined consultation procedures in the implementation plan whereby representatives of the MPOs, State and local air quality planning agencies, State and local transportation agencies, and other organizations with responsibilities for developing, submitting, or implementing provisions of an implementation plan required by the CAA must consult with each other and with local or regional offices of EPA, FHWA, and FTA on the development of the implementation plan, the transportation plan, the TIP, and associated conformity determinations.

(2) Interagency consultation procedures shall include at a minimum the following general factors and the specific processes in paragraph (c) of this section:

(i) The roles and responsibilities assigned to each agency at each stage in the implementation plan development process and the transportation planning process, including technical meetings;

(ii) The organizational level of regular consultation;

(iii) A process for circulating (or providing ready access to) draft documents and supporting materials for comment before formal adoption or publication;

(iv) The frequency of, or process for convening, consultation meetings and responsibilities for establishing meeting agendas;

(v) A process for responding to the significant comments of involved agencies; and

(vi) A process for the development of a list of the TCMs which are in the applicable implementation plan.

(c) *Interagency consultation procedures: Specific processes.* Interagency consultation procedures shall also include the following specific processes:

(1) A process involving the MPO, State and local air quality planning agencies, State and local transportation agencies, EPA, and DOT for the following:

(i) Evaluating and choosing a model (or models) and associated methods and assumptions to be used in hot-spot analyses and regional emissions analyses;

(ii) Determining which minor arterials and other transportation projects should be considered ''regionally significant'' for the purposes of regional emissions analysis (in addition to those

functionally classified as principal arterial or higher or fixed guideway systems or extensions that offer an alternative to regional highway travel), and which projects should be considered to have a significant change in design concept and scope from the transportation plan or TIP;

(iii) Evaluating whether projects otherwise exempted from meeting the requirements of this subpart (see §§ 93.126 and 93.127) should be treated as non-exempt in cases where potential adverse emissions impacts may exist for any reason;

(iv) Making a determination, as required by § 93.113(c)(1), whether past obstacles to implementation of TCMs which are behind the schedule established in the applicable implementation plan have been identified and are being overcome, and whether State and local agencies with influence over approvals or funding for TCMs are giving maximum priority to approval or funding for TCMs. This process shall also consider whether delays in TCM implementation necessitate revisions to the applicable implementation plan to remove TCMs or substitute TCMs or other emission reduction measures;

(v) Identifying, as required by § 93.123(b), projects located at sites in PM_{10} nonattainment areas which have vehicle and roadway emission and dispersion characteristics which are essentially identical to those at sites which have violations verified by monitoring, and therefore require quantitative PM_{10} hot-spot analysis;

(vi) Notification of transportation plan or TIP revisions or amendments which merely add or delete exempt projects listed in § 93.126 or § 93.127; and

(vii) Choosing conformity tests and methodologies for isolated rural nonattainment and maintenance areas, as required by § 93.109(g)(2)(iii).

(2) A process involving the MPO and State and local air quality planning agencies and transportation agencies for the following:

(i) Evaluating events which will trigger new conformity determinations in addition to those triggering events established in § 93.104; and

(ii) Consulting on emissions analysis for transportation activities which cross the borders of MPOs or nonattainment areas or air basins.

(3) Where the metropolitan planning area does not include the entire nonattainment or maintenance area, a process involving the MPO and the State department of transportation for cooperative planning and analysis for purposes of determining conformity of all projects outside the metropolitan area and within the nonattainment or maintenance area.

(4) A process to ensure that plans for construction of regionally significant projects which are not FHWA/FTA projects (including projects for which alternative locations, design concept and scope, or the no-build option are still being considered), including those by recipients of funds designated under title 23 U.S.C. or the Federal Transit Laws, are disclosed to the MPO on a regular basis, and to ensure that any changes to those plans are immediately disclosed.

(5) A process involving the MPO and other recipients of funds designated under title 23 U.S.C. or the Federal Transit Laws for assuming the location and design concept and scope of projects which are disclosed to the MPO as required by paragraph (c)(4) of this section but whose sponsors have not yet decided these features, in sufficient detail to perform the regional emissions analysis according to the requirements of § 93.122.

(6) A process for consulting on the design, schedule, and funding of research and data collection efforts and regional transportation model development by the MPO (e.g., household/ travel transportation surveys).

(7) A process for providing final documents (including applicable implementation plans and implementation plan revisions) and supporting information to each agency after approval or adoption. This process is applicable to all agencies described in paragraph (a)(1) of this section, including Federal agencies.

(d) *Resolving conflicts.* Conflicts among State agencies or between State agencies and an MPO shall be escalated to the Governor if they cannot be resolved by the heads of the involved agencies. The State air agency has 14

calendar days to appeal to the Governor after the State DOT or MPO has notified the State air agency head of the resolution of his or her comments. The implementation plan revision required by § 51.390 of this chapter shall define the procedures for starting the 14-day clock. If the State air agency appeals to the Governor, the final conformity determination must have the concurrence of the Governor. If the State air agency does not appeal to the Governor within 14 days, the MPO or State department of transportation may proceed with the final conformity determination. The Governor may delegate his or her role in this process, but not to the head or staff of the State or local air agency, State department of transportation, State transportation commission or board, or an MPO.

(e) *Public consultation procedures.* Affected agencies making conformity determinations on transportation plans, programs, and projects shall establish a proactive public involvement process which provides opportunity for public review and comment by, at a minimum, providing reasonable public access to technical and policy information considered by the agency at the beginning of the public comment period and prior to taking formal action on a conformity determination for all transportation plans and TIPs, consistent with these requirements and those of 23 CFR 450.316(b). Any charges imposed for public inspection and copying should be consistent with the fee schedule contained in 49 CFR 7.95. In addition, these agencies must specifically address in writing all public comments that known plans for a regionally significant project which is not receiving FHWA or FTA funding or approval have not been properly reflected in the emissions analysis supporting a proposed conformity finding for a transportation plan or TIP. These agencies shall also provide opportunity for public involvement in conformity determinations for projects where otherwise required by law.

§ 93.106 Content of transportation plans.

(a) *Transportation plans adopted after January 1, 1997 in serious, severe, or extreme ozone nonattainment areas and in serious CO nonattainment areas.* If the metropolitan planning area contains an urbanized area population greater than 200,000, the transportation plan must specifically describe the transportation system envisioned for certain future years which shall be called horizon years.

(1) The agency or organization developing the transportation plan may choose any years to be horizon years, subject to the following restrictions:

(i) Horizon years may be no more than 10 years apart;

(ii) The first horizon year may be no more than 10 years from the base year used to validate the transportation demand planning model;

(iii) If the attainment year is in the time span of the transportation plan, the attainment year must be a horizon year; and

(iv) The last horizon year must be the last year of the transportation plan's forecast period.

(2) For these horizon years:

(i) The transportation plan shall quantify and document the demographic and employment factors influencing expected transportation demand, including land use forecasts, in accordance with implementation plan provisions and the consultation requirements specified by § 93.105;

(ii) The highway and transit system shall be described in terms of the regionally significant additions or modifications to the existing transportation network which the transportation plan envisions to be operational in the horizon years. Additions and modifications to the highway network shall be sufficiently identified to indicate intersections with existing regionally significant facilities, and to determine their effect on route options between transportation analysis zones. Each added or modified highway segment shall also be sufficiently identified in terms of its design concept and design scope to allow modeling of travel times under various traffic volumes, consistent with the modeling methods for areawide transportation analysis in use by the MPO. Transit facilities, equipment, and services envisioned for the future shall be identified in terms of design concept, design scope, and operating

policies that are sufficient for modeling of their transit ridership. Additions and modifications to the transportation network shall be described sufficiently to show that there is a reasonable relationship between expected land use and the envisioned transportation system; and

(iii) Other future transportation policies, requirements, services, and activities, including intermodal activities, shall be described.

(b) *Moderate areas reclassified to serious*. Ozone or CO nonattainment areas which are reclassified from moderate to serious and have an urbanized population greater than 200,000 must meet the requirements of paragraph (a) of this section within two years from the date of reclassification.

(c) *Transportation plans for other areas*. Transportation plans for other areas must meet the requirements of paragraph (a) of this section at least to the extent it has been the previous practice of the MPO to prepare plans which meet those requirements. Otherwise, the transportation system envisioned for the future must be sufficiently described within the transportation plans so that a conformity determination can be made according to the criteria and procedures of §§ 93.109 through 93.119.

(d) *Savings*. The requirements of this section supplement other requirements of applicable law or regulation governing the format or content of transportation plans.

§ 93.107 Relationship of transportation plan and TIP conformity with the NEPA process.

The degree of specificity required in the transportation plan and the specific travel network assumed for air quality modeling do not preclude the consideration of alternatives in the NEPA process or other project development studies. Should the NEPA process result in a project with design concept and scope significantly different from that in the transportation plan or TIP, the project must meet the criteria in §§ 93.109 through 93.119 for projects not from a TIP before NEPA process completion.

§ 93.108 Fiscal constraints for transportation plans and TIPs.

Transportation plans and TIPs must be fiscally constrained consistent with DOT's metropolitan planning regulations at 23 CFR part 450 in order to be found in conformity.

§ 93.109 Criteria and procedures for determining conformity of transportation plans, programs, and projects: General.

(a) In order for each transportation plan, program, and FHWA/FTA project to be found to conform, the MPO and DOT must demonstrate that the applicable criteria and procedures in this subpart are satisfied, and the MPO and DOT must comply with all applicable conformity requirements of implementation plans and of court orders for the area which pertain specifically to conformity. The criteria for making conformity determinations differ based on the action under review (transportation plans, TIPs, and FHWA/FTA projects), the relevant pollutant(s), and the status of the implementation plan.

(b) Table 1 in this paragraph indicates the criteria and procedures in §§ 93.110 through 93.119 which apply for transportation plans, TIPs, and FHWA/FTA projects. Paragraphs (c) through (f) of this section explain when the budget, emission reduction, and hot spot tests are required for each pollutant. Paragraph (g) of this section addresses isolated rural nonattainment and maintenance areas. Table 1 follows:

TABLE 1—CONFORMITY CRITERIA

All Actions at all times:	
§ 93.110	Latest planning assumptions
§ 93.111	Latest emissions model
§ 93.112	Consultation
Transportation Plan:	
§ 93.113(b)	TCMs
§ 93.118 or § 93.119	Emissions budget or Emission reduction
TIP:	
§ 93.113(c)	TCMs
§ 93.118 or § 93.119	Emissions budget or Emission reduction
Project (From a Conforming Plan and TIP):	
§ 93.114	Currently conforming plan and TIP
§ 93.115	Project from a conforming plan and TIP
§ 93.116	CO and PM_{10} hot spots
§ 93.117	PM_{10} control measures

TABLE 1—CONFORMITY CRITERIA—Continued

Project (Not From a Conforming Plan and TIP):	
§ 93.113(d)	TCMs
§ 93.114	Currently conforming plan and TIP
§ 93.116	CO and PM_{10} hot spots
§ 93.117	PM_{10} control measures
§ 93.118 or § 93.119	Emissions budget or Emission reduction

(c) *Ozone nonattainment and maintenance areas.* In addition to the criteria listed in Table 1 in paragraph (b) of this section that are required to be satisfied at all times, in ozone nonattainment and maintenance areas conformity determinations must include a demonstration that the budget and/or emission reduction tests are satisfied as described in the following:

(1) In ozone nonattainment and maintenance areas the budget test must be satisfied as required by § 93.118 for conformity determinations made:

(i) 45 days after a control strategy implementation plan revision or maintenance plan has been submitted to EPA, unless EPA has declared the motor vehicle emissions budget inadequate for transportation conformity purposes; or

(ii) After EPA has declared that the motor vehicle emissions budget in a submitted control strategy implementation plan revision or maintenance plan is adequate for transportation conformity purposes.

(2) In ozone nonattainment areas that are required to submit a control strategy implementation plan revision (usually moderate and above areas), the emission reduction tests must be satisfied as required by § 93.119 for conformity determinations made:

(i) During the first 45 days after a control strategy implementation plan revision or maintenance plan has been submitted to EPA, unless EPA has declared a motor vehicle emissions budget adequate for transportation conformity purposes; or

(ii) If EPA has declared the motor vehicle emissions budget in a submitted control strategy implementation plan revision or maintenance plan inadequate for transportation conformity purposes, and there is no previously established motor vehicle emissions budget in the approved implementation plan or a previously submitted control strategy implementation plan revision or maintenance plan.

(3) An ozone nonattainment area must satisfy the emission reduction test for NO_X, as required by § 93.119, if the implementation plan or plan submission that is applicable for the purposes of conformity determinations is a 15% plan or Phase I attainment demonstration that does not include a motor vehicle emissions budget for NO_X. The implementation plan will be considered to establish a motor vehicle emissions budget for NO_X if the implementation plan or plan submission contains an explicit NO_X motor vehicle emissions budget that is intended to act as a ceiling on future NO_X emissions, and the NO_X motor vehicle emissions budget is a net reduction from NO_X emissions levels in 1990.

(4) Ozone nonattainment areas that have not submitted a maintenance plan and that are not required to submit a control strategy implementation plan revision (usually marginal and below areas) must satisfy one of the following requirements:

(i) The emission reduction tests required by § 93.119; or

(ii) The State shall submit to EPA an implementation plan revision that contains motor vehicle emissions budget(s) and an attainment demonstration, and the budget test required by § 93.118 must be satisfied using the submitted motor vehicle emissions budget(s) (as described in paragraph (c)(1) of this section).

(5) Notwithstanding paragraphs (c)(1) and (c)(2) of this section, moderate and above ozone nonattainment areas with three years of clean data that have not submitted a maintenance plan and that EPA has determined are not subject to the Clean Air Act reasonable further progress and attainment demonstration requirements must satisfy one of the following requirements:

(i) The emission reduction tests as required by § 93.119;

(ii) The budget test as required by § 93.118, using the motor vehicle emissions budgets in the submitted control strategy implementation plan (subject to the timing requirements of paragraph (c)(1) of this section); or

(iii) The budget test as required by § 93.118, using the motor vehicle emissions of ozone precursors in the most recent year of clean data as motor vehicle emissions budgets, if such budgets are established by the EPA rulemaking that determines that the area has clean data.

(d) *CO nonattainment and maintenance areas.* In addition to the criteria listed in Table 1 in paragraph (b) of this section that are required to be satisfied at all times, in CO nonattainment and maintenance areas conformity determinations must include a demonstration that the hot spot, budget and/or emission reduction tests are satisfied as described in the following:

(1) FHWA/FTA projects in CO nonattainment or maintenance areas must satisfy the hot spot test required by § 93.116(a) at all times. Until a CO attainment demonstration or maintenance plan is approved by EPA, FHWA/FTA projects must also satisfy the hot spot test required by § 93.116(b).

(2) In CO nonattainment and maintenance areas the budget test must be satisfied as required by § 93.118 for conformity determinations made:

(i) 45 days after a control strategy implementation plan revision or maintenance plan has been submitted to EPA, unless EPA has declared the motor vehicle emissions budget inadequate for transportation conformity purposes; or

(ii) After EPA has declared that the motor vehicle emissions budget in a submitted control strategy implementation plan revision or maintenance plan is adequate for transportation conformity purposes.

(3) Except as provided in paragraph (d)(4) of this section, in CO nonattainment areas the emission reduction tests must be satisfied as required by § 93.119 for conformity determinations made:

(i) During the first 45 days after a control strategy implementation plan revision or maintenance plan has been submitted to EPA, unless EPA has declared a motor vehicle emissions budget adequate for transportation conformity purposes; or

(ii) If EPA has declared the motor vehicle emissions budget in a submitted control strategy implementation plan revision or maintenance plan inadequate for transportation conformity purposes, and there is no previously established motor vehicle emissions budget in the approved implementation plan or a previously submitted control strategy implementation plan revision or maintenance plan.

(4) CO nonattainment areas that have not submitted a maintenance plan and that are not required to submit an attainment demonstration (e.g., moderate CO areas with a design value of 12.7 ppm or less or not classified CO areas) must satisfy one of the following requirements:

(i) The emission reduction tests required by § 93.119; or

(ii) The State shall submit to EPA an implementation plan revision that contains motor vehicle emissions budget(s) and an attainment demonstration, and the budget test required by § 93.118 must be satisfied using the submitted motor vehicle emissions budget(s) (as described in paragraph (d)(2) of this section).

(e) *PM_{10} nonattainment and maintenance areas.* In addition to the criteria listed in Table 1 in paragraph (b) of this section that are required to be satisfied at all times, in PM_{10} nonattainment and maintenance areas conformity determinations must include a demonstration that the hot spot, budget and/or emission reduction tests are satisfied as described in the following:

(1) FHWA/FTA projects in PM_{10} nonattainment or maintenance areas must satisfy the hot spot test required by § 93.116(a).

(2) In PM_{10} nonattainment and maintenance areas the budget test must be satisfied as required by § 93.118 for conformity determinations made:

(i) 45 days after a control strategy implementation plan revision or maintenance plan has been submitted to EPA, unless EPA has declared the motor vehicle emissions budget inadequate for transportation conformity purposes; or

(ii) After EPA has declared that the motor vehicle emissions budget in a submitted control strategy implementation plan revision or maintenance plan is adequate for transportation conformity purposes.

(3) In PM_{10} nonattainment areas the emission reduction tests must be satisfied as required by § 93.119 for conformity determinations made:

(i) During the first 45 days after a control strategy implementation plan revision or maintenance plan has been submitted to EPA, unless EPA has declared a motor vehicle emissions budget adequate for transportation conformity purposes;

(ii) If EPA has declared the motor vehicle emissions budget in a submitted control strategy implementation plan revision or maintenance plan inadequate for transportation conformity purposes, and there is no previously established motor vehicle emissions budget in the approved implementation plan or a previously submitted control strategy implementation plan revision or maintenance plan; or

(iii) If the submitted implementation plan revision is a demonstration of impracticability under CAA section 189(a)(1)(B)(ii) and does not demonstrate attainment.

(f) *NO_2 nonattainment and maintenance areas.* In addition to the criteria listed in Table 1 in paragraph (b) of this section that are required to be satisfied at all times, in NO_2 nonattainment and maintenance areas conformity determinations must include a demonstration that the budget and/or emission reduction tests are satisfied as described in the following:

(1) In NO_2 nonattainment and maintenance areas the budget test must be satisfied as required by § 93.118 for conformity determinations made:

(i) 45 days after a control strategy implementation plan revision or maintenance plan has been submitted to EPA, unless EPA has declared the motor vehicle emissions budget inadequate for transportation conformity purposes; or

(ii) After EPA has declared that the motor vehicle emissions budget in a submitted control strategy implementation plan revision or maintenance plan is adequate for transportation conformity purposes.

(2) In NO_2 nonattainment areas the emission reduction tests must be satisfied as required by § 93.119 for conformity determinations made:

(i) During the first 45 days after a control strategy implementation plan revision or maintenance plan has been submitted to EPA, unless EPA has declared a motor vehicle emissions budget adequate for transportation conformity purposes; or

(ii) If EPA has declared the motor vehicle emissions budget in a submitted control strategy implementation plan revision or maintenance plan inadequate for transportation conformity purposes, and there is no previously established motor vehicle emissions budget in the approved implementation plan or a previously submitted control strategy implementation plan revision or maintenance plan.

(g) *Isolated rural nonattainment and maintenance areas.* This paragraph applies to any nonattainment or maintenance area (or portion thereof) which does not have a metropolitan transportation plan or TIP and whose projects are not part of the emissions analysis of any MPO's metropolitan transportation plan or TIP. This paragraph does not apply to ''donut'' areas which are outside the metropolitan planning boundary and inside the nonattainment/maintenance area boundary.

(1) FHWA/FTA projects in all isolated rural nonattainment and maintenance areas must satisfy the requirements of §§ 93.110, 93.111, 93.112, 93.113(d), 93.116, and 93.117. Until EPA approves the control strategy implementation plan or maintenance plan for a rural CO nonattainment or maintenance area, FHWA/FTA projects must also satisfy the requirements of § 93.116(b) (''Localized CO and PM_{10} violations (hot spots)'').

(2) Isolated rural nonattainment and maintenance areas are subject to the budget and/or emission reduction tests as described in paragraphs (c) through (f) of this section, with the following modifications:

(i) When the requirements of §§ 93.118 and 93.119 apply to isolated rural nonattainment and maintenance areas, references to ''transportation plan'' or ''TIP'' should be taken to mean those projects in the statewide transportation plan or statewide TIP which are in the rural nonattainment or maintenance area.

(ii) In isolated rural nonattainment and maintenance areas that are subject to §93.118, FHWA/FTA projects must be consistent with motor vehicle emissions budget(s) for the years in the timeframe of the attainment demonstration or maintenance plan. For years after the attainment year (if a maintenance plan has not been submitted) or after the last year of the maintenance plan, FHWA/FTA projects must satisfy one of the following requirements:

(A) §93.118;

(B) §93.119 (including regional emissions analysis for NO_X in all ozone nonattainment and maintenance areas, notwithstanding §93.119(d)(2)); or

(C) As demonstrated by the air quality dispersion model or other air quality modeling technique used in the attainment demonstration or maintenance plan, the FHWA/FTA project, in combination with all other regionally significant projects expected in the area in the timeframe of the statewide transportation plan, must not cause or contribute to any new violation of any standard in any areas; increase the frequency or severity of any existing violation of any standard in any area; or delay timely attainment of any standard or any required interim emission reductions or other milestones in any area. Control measures assumed in the analysis must be enforceable.

(iii) The choice of requirements in paragraph (g)(2)(ii) of this section and the methodology used to meet the requirements of paragraph (g)(2)(ii)(C) of this section must be determined through the interagency consultation process required in §93.105(c)(1)(vii) through which the relevant recipients of title 23 U.S.C. or Federal Transit Laws funds, the local air quality agency, the State air quality agency, and the State department of transportation should reach consensus about the option and methodology selected. EPA and DOT must be consulted through this process as well. In the event of unresolved disputes, conflicts may be escalated to the Governor consistent with the procedure in §93.105(d), which applies for any State air agency comments on a conformity determination.

§93.110 Criteria and procedures: Latest planning assumptions.

(a) The conformity determination, with respect to all other applicable criteria in §§93.111 through 93.119, must be based upon the most recent planning assumptions in force at the time of the conformity determination. The conformity determination must satisfy the requirements of paragraphs (b) through (f) of this section.

(b) Assumptions must be derived from the estimates of current and future population, employment, travel, and congestion most recently developed by the MPO or other agency authorized to make such estimates and approved by the MPO. The conformity determination must also be based on the latest assumptions about current and future background concentrations.

(c) The conformity determination for each transportation plan and TIP must discuss how transit operating policies (including fares and service levels) and assumed transit ridership have changed since the previous conformity determination.

(d) The conformity determination must include reasonable assumptions about transit service and increases in transit fares and road and bridge tolls over time.

(e) The conformity determination must use the latest existing information regarding the effectiveness of the TCMs and other implementation plan measures which have already been implemented.

(f) Key assumptions shall be specified and included in the draft documents and supporting materials used for the interagency and public consultation required by §93.105.

§93.111 Criteria and procedures: Latest emissions model.

(a) The conformity determination must be based on the latest emission estimation model available. This criterion is satisfied if the most current version of the motor vehicle emissions model specified by EPA for use in the preparation or revision of implementation plans in that State or area is used for the conformity analysis. Where EMFAC is the motor vehicle emissions model used in preparing or revising the applicable implementation plan, new

versions must be approved by EPA before they are used in the conformity analysis.

(b) EPA will consult with DOT to establish a grace period following the specification of any new model.

(1) The grace period will be no less than three months and no more than 24 months after notice of availability is published in the FEDERAL REGISTER.

(2) The length of the grace period will depend on the degree of change in the model and the scope of re-planning likely to be necessary by MPOs in order to assure conformity. If the grace period will be longer than three months, EPA will announce the appropriate grace period in the FEDERAL REGISTER.

(c) Transportation plan and TIP conformity analyses for which the emissions analysis was begun during the grace period or before the FEDERAL REGISTER notice of availability of the latest emission model may continue to use the previous version of the model. Conformity determinations for projects may also be based on the previous model if the analysis was begun during the grace period or before the FEDERAL REGISTER notice of availability, and if the final environmental document for the project is issued no more than three years after the issuance of the draft environmental document.

§ 93.112 Criteria and procedures: Consultation.

Conformity must be determined according to the consultation procedures in this subpart and in the applicable implementation plan, and according to the public involvement procedures established in compliance with 23 CFR part 450. Until the implementation plan revision required by § 51.390 of this chapter is fully approved by EPA, the conformity determination must be made according to § 93.105 (a)(2) and (e) and the requirements of 23 CFR part 450.

§ 93.113 Criteria and procedures: Timely implementation of TCMs.

(a) The transportation plan, TIP, or any FHWA/FTA project which is not from a conforming plan and TIP must provide for the timely implementation of TCMs from the applicable implementation plan.

(b) For transportation plans, this criterion is satisfied if the following two conditions are met:

(1) The transportation plan, in describing the envisioned future transportation system, provides for the timely completion or implementation of all TCMs in the applicable implementation plan which are eligible for funding under title 23 U.S.C. or the Federal Transit Laws, consistent with schedules included in the applicable implementation plan.

(2) Nothing in the transportation plan interferes with the implementation of any TCM in the applicable implementation plan.

(c) For TIPs, this criterion is satisfied if the following conditions are met:

(1) An examination of the specific steps and funding source(s) needed to fully implement each TCM indicates that TCMs which are eligible for funding under title 23 U.S.C. or the Federal Transit Laws are on or ahead of the schedule established in the applicable implementation plan, or, if such TCMs are behind the schedule established in the applicable implementation plan, the MPO and DOT have determined that past obstacles to implementation of the TCMs have been identified and have been or are being overcome, and that all State and local agencies with influence over approvals or funding for TCMs are giving maximum priority to approval or funding of TCMs over other projects within their control, including projects in locations outside the nonattainment or maintenance area.

(2) If TCMs in the applicable implementation plan have previously been programmed for Federal funding but the funds have not been obligated and the TCMs are behind the schedule in the implementation plan, then the TIP cannot be found to conform if the funds intended for those TCMs are reallocated to projects in the TIP other than TCMs, or if there are no other TCMs in the TIP, if the funds are reallocated to projects in the TIP other than projects which are eligible for Federal funding intended for air quality improvement

projects, e.g., the Congestion Mitigation and Air Quality Improvement Program.

(3) Nothing in the TIP may interfere with the implementation of any TCM in the applicable implementation plan.

(d) For FHWA/FTA projects which are not from a conforming transportation plan and TIP, this criterion is satisfied if the project does not interfere with the implementation of any TCM in the applicable implementation plan.

§93.114 Criteria and procedures: Currently conforming transportation plan and TIP.

There must be a currently conforming transportation plan and currently conforming TIP at the time of project approval.

(a) Only one conforming transportation plan or TIP may exist in an area at any time; conformity determinations of a previous transportation plan or TIP expire once the current plan or TIP is found to conform by DOT. The conformity determination on a transportation plan or TIP will also lapse if conformity is not determined according to the frequency requirements specified in §93.104.

(b) This criterion is not required to be satisfied at the time of project approval for a TCM specifically included in the applicable implementation plan, provided that all other relevant criteria of this subpart are satisfied.

§93.115 Criteria and procedures: Projects from a plan and TIP.

(a) The project must come from a conforming plan and program. If this criterion is not satisfied, the project must satisfy all criteria in Table 1 of §93.109(b) for a project not from a conforming transportation plan and TIP. A project is considered to be from a conforming transportation plan if it meets the requirements of paragraph (b) of this section and from a conforming program if it meets the requirements of paragraph (c) of this section. Special provisions for TCMs in an applicable implementation plan are provided in paragraph (d) of this section.

(b) A project is considered to be from a conforming transportation plan if one of the following conditions applies:

(1) For projects which are required to be identified in the transportation plan in order to satisfy §93.106 (''Content of transportation plans''), the project is specifically included in the conforming transportation plan and the project's design concept and scope have not changed significantly from those which were described in the transportation plan, or in a manner which would significantly impact use of the facility; or

(2) For projects which are not required to be specifically identified in the transportation plan, the project is identified in the conforming transportation plan, or is consistent with the policies and purpose of the transportation plan and will not interfere with other projects specifically included in the transportation plan.

(c) A project is considered to be from a conforming program if the following conditions are met:

(1) The project is included in the conforming TIP and the design concept and scope of the project were adequate at the time of the TIP conformity determination to determine its contribution to the TIP's regional emissions, and the project design concept and scope have not changed significantly from those which were described in the TIP; and

(2) If the TIP describes a project design concept and scope which includes project-level emissions mitigation or control measures, written commitments to implement such measures must be obtained from the project sponsor and/or operator as required by §93.125(a) in order for the project to be considered from a conforming program. Any change in these mitigation or control measures that would significantly reduce their effectiveness constitutes a change in the design concept and scope of the project.

(d) *TCMs.* This criterion is not required to be satisfied for TCMs specifically included in an applicable implementation plan.

§ 93.116 Criteria and procedures: Localized CO and PM_{10} violations (hot spots).

(a) This paragraph applies at all times. The FHWA/FTA project must not cause or contribute to any new localized CO or PM_{10} violations or increase the frequency or severity of any existing CO or PM_{10} violations in CO and PM_{10} nonattainment and maintenance areas. This criterion is satisfied if it is demonstrated that no new local violations will be created and the severity or number of existing violations will not be increased as a result of the project. The demonstration must be performed according to the consultation requirements of § 93.105(c)(1)(i) and the methodology requirements of § 93.123.

(b) This paragraph applies for CO nonattainment areas as described in § 93.109(d)(1). Each FHWA/FTA project must eliminate or reduce the severity and number of localized CO violations in the area substantially affected by the project (in CO nonattainment areas). This criterion is satisfied with respect to existing localized CO violations if it is demonstrated that existing localized CO violations will be eliminated or reduced in severity and number as a result of the project. The demonstration must be performed according to the consultation requirements of § 93.105(c)(1)(i) and the methodology requirements of § 93.123.

§ 93.117 Criteria and procedures: Compliance with PM_{10} control measures.

The FHWA/FTA project must comply with PM_{10} control measures in the applicable implementation plan. This criterion is satisfied if the project-level conformity determination contains a written commitment from the project sponsor to include in the final plans, specifications, and estimates for the project those control measures (for the purpose of limiting PM_{10} emissions from the construction activities and/or normal use and operation associated with the project) that are contained in the applicable implementation plan.

§ 93.118 Criteria and procedures: Motor vehicle emissions budget.

(a) The transportation plan, TIP, and project not from a conforming transportation plan and TIP must be consistent with the motor vehicle emissions budget(s) in the applicable implementation plan (or implementation plan submission). This criterion applies as described in § 93.109 (c) through (g). This criterion is satisfied if it is demonstrated that emissions of the pollutants or pollutant precursors described in paragraph (c) of this section are less than or equal to the motor vehicle emissions budget(s) established in the applicable implementation plan or implementation plan submission.

(b) Consistency with the motor vehicle emissions budget(s) must be demonstrated for each year for which the applicable (and/or submitted) implementation plan specifically establishes motor vehicle emissions budget(s), for the last year of the transportation plan's forecast period, and for any intermediate years as necessary so that the years for which consistency is demonstrated are no more than ten years apart, as follows:

(1) Until a maintenance plan is submitted:

(i) Emissions in each year (such as milestone years and the attainment year) for which the control strategy implementation plan revision establishes motor vehicle emissions budget(s) must be less than or equal to that year's motor vehicle emissions budget(s); and

(ii) Emissions in years for which no motor vehicle emissions budget(s) are specifically established must be less than or equal to the motor vehicle emissions budget(s) established for the most recent prior year. For example, emissions in years after the attainment year for which the implementation plan does not establish a budget must be less than or equal to the motor vehicle emissions budget(s) for the attainment year.

(2) When a maintenance plan has been submitted:

(i) Emissions must be less than or equal to the motor vehicle emissions budget(s) established for the last year of the maintenance plan, and for any other years for which the maintenance plan establishes motor vehicle emissions budgets. If the maintenance plan does not establish motor vehicle emissions budgets for any years other than

the last year of the maintenance plan, the demonstration of consistency with the motor vehicle emissions budget(s) must be accompanied by a qualitative finding that there are no factors which would cause or contribute to a new violation or exacerbate an existing violation in the years before the last year of the maintenance plan. The interagency consultation process required by §93.105 shall determine what must be considered in order to make such a finding;

(ii) For years after the last year of the maintenance plan, emissions must be less than or equal to the maintenance plan's motor vehicle emissions budget(s) for the last year of the maintenance plan; and

(iii) If an approved control strategy implementation plan has established motor vehicle emissions budgets for years in the timeframe of the transportation plan, emissions in these years must be less than or equal to the control strategy implementation plan's motor vehicle emissions budget(s) for these years.

(c) Consistency with the motor vehicle emissions budget(s) must be demonstrated for each pollutant or pollutant precursor in §93.102(b) for which the area is in nonattainment or maintenance and for which the applicable implementation plan (or implementation plan submission) establishes a motor vehicle emissions budget.

(d) Consistency with the motor vehicle emissions budget(s) must be demonstrated by including emissions from the entire transportation system, including all regionally significant projects contained in the transportation plan and all other regionally significant highway and transit projects expected in the nonattainment or maintenance area in the timeframe of the transportation plan.

(1) Consistency with the motor vehicle emissions budget(s) must be demonstrated with a regional emissions analysis that meets the requirements of §§93.122 and 93.105(c)(1)(i).

(2) The regional emissions analysis may be performed for any years in the timeframe of the transportation plan provided they are not more than ten years apart and provided the analysis is performed for the attainment year (if it is in the timeframe of the transportation plan) and the last year of the plan's forecast period. Emissions in years for which consistency with motor vehicle emissions budgets must be demonstrated, as required in paragraph (b) of this section, may be determined by interpolating between the years for which the regional emissions analysis is performed.

(e) *Motor vehicle emissions budgets in submitted control strategy implementation plan revisions and submitted maintenance plans.* (1) Consistency with the motor vehicle emissions budgets in submitted control strategy implementation plan revisions or maintenance plans must be demonstrated if EPA has declared the motor vehicle emissions budget(s) adequate for transportation conformity purposes, or beginning 45 days after the control strategy implementation plan revision or maintenance plan has been submitted (unless EPA has declared the motor vehicle emissions budget(s) inadequate for transportation conformity purposes). However, submitted implementation plans do not supersede the motor vehicle emissions budgets in approved implementation plans for the period of years addressed by the approved implementation plan.

(2) If EPA has declared an implementation plan submission's motor vehicle emissions budget(s) inadequate for transportation conformity purposes, the inadequate budget(s) shall not be used to satisfy the requirements of this section. Consistency with the previously established motor vehicle emissions budget(s) must be demonstrated. If there are no previous approved implementation plans or implementation plan submissions with motor vehicle emissions budgets, the emission reduction tests required by §93.119 must be satisfied.

(3) If EPA declares an implementation plan submission's motor vehicle emissions budget(s) inadequate for transportation conformity purposes more than 45 days after its submission to EPA, and conformity of a transportation plan or TIP has already been determined by DOT using the budget(s), the conformity determination will remain valid. Projects included in that transportation plan or TIP could still

satisfy §§ 93.114 and 93.115, which require a currently conforming transportation plan and TIP to be in place at the time of a project's conformity determination and that projects come from a conforming transportation plan and TIP.

(4) EPA will not find a motor vehicle emissions budget in a submitted control strategy implementation plan revision or maintenance plan to be adequate for transportation conformity purposes unless the following minimum criteria are satisfied:

(i) The submitted control strategy implementation plan revision or maintenance plan was endorsed by the Governor (or his or her designee) and was subject to a State public hearing;

(ii) Before the control strategy implementation plan or maintenance plan was submitted to EPA, consultation among federal, State, and local agencies occurred; full implementation plan documentation was provided to EPA; and EPA's stated concerns, if any, were addressed;

(iii) The motor vehicle emissions budget(s) is clearly identified and precisely quantified;

(iv) The motor vehicle emissions budget(s), when considered together with all other emissions sources, is consistent with applicable requirements for reasonable further progress, attainment, or maintenance (whichever is relevant to the given implementation plan submission);

(v) The motor vehicle emissions budget(s) is consistent with and clearly related to the emissions inventory and the control measures in the submitted control strategy implementation plan revision or maintenance plan; and

(vi) Revisions to previously submitted control strategy implementation plans or maintenance plans explain and document any changes to previously submitted budgets and control measures; impacts on point and area source emissions; any changes to established safety margins (see § 93.101 for definition); and reasons for the changes (including the basis for any changes related to emission factors or estimates of vehicle miles traveled).

(5) Before determining the adequacy of a submitted motor vehicle emissions budget, EPA will review the State's compilation of public comments and response to comments that are required to be submitted with any implementation plan. EPA will document its consideration of such comments and responses in a letter to the State indicating the adequacy of the submitted motor vehicle emissions budget.

(6) When the motor vehicle emissions budget(s) used to satisfy the requirements of this section are established by an implementation plan submittal that has not yet been approved or disapproved by EPA, the MPO and DOT's conformity determinations will be deemed to be a statement that the MPO and DOT are not aware of any information that would indicate that emissions consistent with the motor vehicle emissions budget will cause or contribute to any new violation of any standard; increase the frequency or severity of any existing violation of any standard; or delay timely attainment of any standard or any required interim emission reductions or other milestones.

§ 93.119 Criteria and procedures: Emission reductions in areas without motor vehicle emissions budgets.

(a) The transportation plan, TIP, and project not from a conforming transportation plan and TIP must contribute to emissions reductions. This criterion applies as described in § 93.109(c) through (g). It applies to the net effect of the action (transportation plan, TIP, or project not from a conforming transportation plan and TIP) on motor vehicle emissions from the entire transportation system.

(b) This criterion may be met in moderate and above ozone nonattainment areas that are subject to the reasonable further progress requirements of CAA section 182(b)(1) and in moderate with design value greater than 12.7 ppm and serious CO nonattainment areas if a regional emissions analysis that satisfies the requirements of § 93.122 and paragraphs (e) through (h) of this section demonstrates that for each analysis year and for each of the pollutants described in paragraph (d) of this section:

(1) The emissions predicted in the ''Action'' scenario are less than the

emissions predicted in the ''Baseline'' scenario, and this can be reasonably expected to be true in the periods between the analysis years; and

(2) The emissions predicted in the ''Action'' scenario are lower than 1990 emissions by any nonzero amount.

(c) This criterion may be met in PM_{10} and NO_2 nonattainment areas; marginal and below ozone nonattainment areas and other ozone nonattainment areas that are not subject to the reasonable further progress requirements of CAA section 182(b)(1); and moderate with design value less than 12.7 ppm and below CO nonattainment areas if a regional emissions analysis that satisfies the requirements of §93.122 and paragraphs (e) through (h) of this section demonstrates that for each analysis year and for each of the pollutants described in paragraph (d) of this section, one of the following requirements is met:

(1) The emissions predicted in the ''Action'' scenario are less than the emissions predicted in the ''Baseline'' scenario, and this can be reasonably expected to be true in the periods between the analysis years; or

(2) The emissions predicted in the ''Action'' scenario are not greater than baseline emissions. Baseline emissions are those estimated to have occurred during calendar year 1990, unless the conformity implementation plan revision required by §51.390 of this chapter defines the baseline emissions for a PM_{10} area to be those occurring in a different calendar year for which a baseline emissions inventory was developed for the purpose of developing a control strategy implementation plan.

(d) *Pollutants*. The regional emissions analysis must be performed for the following pollutants:

(1) VOC in ozone areas;

(2) NO_X in ozone areas, unless the EPA Administrator determines that additional reductions of NO_X would not contribute to attainment;

(3) CO in CO areas;

(4) PM_{10} in PM_{10} areas;

(5) Transportation-related precursors of PM_{10} in PM_{10} nonattainment and maintenance areas if the EPA Regional Administrator or the director of the State air agency has made a finding that such precursor emissions from within the area are a significant contributor to the PM_{10} nonattainment problem and has so notified the MPO and DOT; and

(6) NO_X in NO_2 areas.

(e) *Analysis years*. The regional emissions analysis must be performed for analysis years that are no more than ten years apart. The first analysis year must be no more than five years beyond the year in which the conformity determination is being made. The last year of transportation plan's forecast period must also be an analysis year.

(f) *''Baseline'' scenario*. The regional emissions analysis required by paragraphs (b) and (c) of this section must estimate the emissions that would result from the ''Baseline'' scenario in each analysis year. The ''Baseline'' scenario must be defined for each of the analysis years. The ''Baseline'' scenario is the future transportation system that will result from current programs, including the following (except that exempt projects listed in §93.126 and projects exempt from regional emissions analysis as listed in §93.127 need not be explicitly considered):

(1) All in-place regionally significant highway and transit facilities, services and activities;

(2) All ongoing travel demand management or transportation system management activities; and

(3) Completion of all regionally significant projects, regardless of funding source, which are currently under construction or are undergoing right-of-way acquisition (except for hardship acquisition and protective buying); come from the first year of the previously conforming transportation plan and/or TIP; or have completed the NEPA process.

(g) *''Action'' scenario*. The regional emissions analysis required by paragraphs (b) and (c) of this section must estimate the emissions that would result from the ''Action'' scenario in each analysis year. The ''Action'' scenario must be defined for each of the analysis years. The ''Action'' scenario is the transportation system that would result from the implementation of the proposed action (transportation plan, TIP, or project not from a conforming transportation plan and TIP)

and all other expected regionally significant projects in the nonattainment area. The ''Action'' scenario must include the following (except that exempt projects listed in § 93.126 and projects exempt from regional emissions analysis as listed in § 93.127 need not be explicitly considered):

(1) All facilities, services, and activities in the ''Baseline'' scenario;

(2) Completion of all TCMs and regionally significant projects (including facilities, services, and activities) specifically identified in the proposed transportation plan which will be operational or in effect in the analysis year, except that regulatory TCMs may not be assumed to begin at a future time unless the regulation is already adopted by the enforcing jurisdiction or the TCM is identified in the applicable implementation plan;

(3) All travel demand management programs and transportation system management activities known to the MPO, but not included in the applicable implementation plan or utilizing any Federal funding or approval, which have been fully adopted and/or funded by the enforcing jurisdiction or sponsoring agency since the last conformity determination;

(4) The incremental effects of any travel demand management programs and transportation system management activities known to the MPO, but not included in the applicable implementation plan or utilizing any Federal funding or approval, which were adopted and/or funded prior to the date of the last conformity determination, but which have been modified since then to be more stringent or effective;

(5) Completion of all expected regionally significant highway and transit projects which are not from a conforming transportation plan and TIP; and

(6) Completion of all expected regionally significant non-FHWA/FTA highway and transit projects that have clear funding sources and commitments leading toward their implementation and completion by the analysis year.

(h) *Projects not from a conforming transportation plan and TIP.* For the regional emissions analysis required by paragraphs (b) and (c) of this section, if the project which is not from a conforming transportation plan and TIP is a modification of a project currently in the plan or TIP, the 'Baseline' scenario must include the project with its original design concept and scope, and the 'Action' scenario must include the project with its new design concept and scope.

§ 93.120 Consequences of control strategy implementation plan failures.

(a) *Disapprovals.* (1) If EPA disapproves any submitted control strategy implementation plan revision (with or without a protective finding), the conformity status of the transportation plan and TIP shall lapse on the date that highway sanctions as a result of the disapproval are imposed on the nonattainment area under section 179(b)(1) of the CAA. No new transportation plan, TIP, or project may be found to conform until another control strategy implementation plan revision fulfilling the same CAA requirements is submitted and conformity to this submission is determined.

(2) If EPA disapproves a submitted control strategy implementation plan revision without making a protective finding, then beginning 120 days after such disapproval, only projects in the first three years of the currently conforming transportation plan and TIP may be found to conform. This means that beginning 120 days after disapproval without a protective finding, no transportation plan, TIP, or project not in the first three years of the currently conforming plan and TIP may be found to conform until another control strategy implementation plan revision fulfilling the same CAA requirements is submitted and conformity to this submission is determined. During the first 120 days following EPA's disapproval without a protective finding, transportation plan, TIP, and project conformity determinations shall be made using the motor vehicle emissions budget(s) in the disapproved control strategy implementation plan, unless another control strategy implementation plan revision has been submitted and its motor vehicle emissions budget(s) applies for transportation conformity purposes, pursuant to § 93.109.

(3) In disapproving a control strategy implementation plan revision, EPA would give a protective finding where a submitted plan contains adopted control measures or written commitments to adopt enforceable control measures that fully satisfy the emissions reductions requirements relevant to the statutory provision for which the implementation plan revision was submitted, such as reasonable further progress or attainment.

(b) *Failure to submit and incompleteness.* In areas where EPA notifies the State, MPO, and DOT of the State's failure to submit a control strategy implementation plan or submission of an incomplete control strategy implementation plan revision (either of which initiates the sanction process under CAA sections 179 or 110(m)), the conformity status of the transportation plan and TIP shall lapse on the date that highway sanctions are imposed on the nonattainment area for such failure under section 179(b)(1) of the CAA, unless the failure has been remedied and acknowledged by a letter from the EPA Regional Administrator.

(c) *Federal implementation plans.* If EPA promulgates a Federal implementation plan that contains motor vehicle emissions budget(s) as a result of a State failure, the conformity lapse imposed by this section because of that State failure is removed.

§ 93.121 Requirements for adoption or approval of projects by other recipients of funds designated under title 23 U.S.C. or the Federal Transit Laws.

(a) Except as provided in paragraph (b) of this section, no recipient of Federal funds designated under title 23 U.S.C. or the Federal Transit Laws shall adopt or approve a regionally significant highway or transit project, regardless of funding source, unless the recipient finds that the requirements of one of the following are met:

(1) The project was included in the first three years of the most recently conforming transportation plan and TIP (or the conformity determination's regional emissions analyses), even if conformity status is currently lapsed; and the project's design concept and scope has not changed significantly from those analyses; or

(2) There is a currently conforming transportation plan and TIP, and a new regional emissions analysis including the project and the currently conforming transportation plan and TIP demonstrates that the transportation plan and TIP would still conform if the project were implemented (consistent with the requirements of §§ 93.118 and/or 93.119 for a project not from a conforming transportation plan and TIP).

(b) In isolated rural nonattainment and maintenance areas subject to § 93.109(g), no recipient of Federal funds designated under title 23 U.S.C. or the Federal Transit Laws shall adopt or approve a regionally significant highway or transit project, regardless of funding source, unless the recipient finds that the requirements of one of the following are met:

(1) The project was included in the regional emissions analysis supporting the most recent conformity determination for the portion of the statewide transportation plan and TIP which are in the nonattainment or maintenance area, and the project's design concept and scope has not changed significantly; or

(2) A new regional emissions analysis including the project and all other regionally significant projects expected in the nonattainment or maintenance area demonstrates that those projects in the statewide transportation plan and statewide TIP which are in the nonattainment or maintenance area would still conform if the project were implemented (consistent with the requirements of §§ 93.118 and/or 93.119 for projects not from a conforming transportation plan and TIP).

§ 93.122 Procedures for determining regional transportation-related emissions.

(a) *General requirements.* (1) The regional emissions analysis required by §§ 93.118 and 93.119 for the transportation plan, TIP, or project not from a conforming plan and TIP must include all regionally significant projects expected in the nonattainment or maintenance area. The analysis shall include FHWA/FTA projects proposed in the transportation plan and TIP and all other regionally significant projects

which are disclosed to the MPO as required by § 93.105. Projects which are not regionally significant are not required to be explicitly modeled, but vehicle miles traveled (VMT) from such projects must be estimated in accordance with reasonable professional practice. The effects of TCMs and similar projects that are not regionally significant may also be estimated in accordance with reasonable professional practice.

(2) The emissions analysis may not include for emissions reduction credit any TCMs or other measures in the applicable implementation plan which have been delayed beyond the scheduled date(s) until such time as their implementation has been assured. If the measure has been partially implemented and it can be demonstrated that it is providing quantifiable emission reduction benefits, the emissions analysis may include that emissions reduction credit.

(3) Emissions reduction credit from projects, programs, or activities which require a regulatory action in order to be implemented may not be included in the emissions analysis unless:

(i) The regulatory action is already adopted by the enforcing jurisdiction;

(ii) The project, program, or activity is included in the applicable implementation plan;

(iii) The control strategy implementation plan submission or maintenance plan submission that establishes the motor vehicle emissions budget(s) for the purposes of § 93.118 contains a written commitment to the project, program, or activity by the agency with authority to implement it; or

(iv) EPA has approved an opt-in to a Federally enforced program, EPA has promulgated the program (if the control program is a Federal responsibility, such as vehicle tailpipe standards), or the Clean Air Act requires the program without need for individual State action and without any discretionary authority for EPA to set its stringency, delay its effective date, or not implement the program.

(4) Emissions reduction credit from control measures that are not included in the transportation plan and TIP and that do not require a regulatory action in order to be implemented may not be included in the emissions analysis unless the conformity determination includes written commitments to implementation from the appropriate entities.

(i) Persons or entities voluntarily committing to control measures must comply with the obligations of such commitments.

(ii) The conformity implementation plan revision required in § 51.390 of this chapter must provide that written commitments to control measures that are not included in the transportation plan and TIP must be obtained prior to a conformity determination and that such commitments must be fulfilled.

(5) A regional emissions analysis for the purpose of satisfying the requirements of § 93.119 must make the same assumptions in both the ''Baseline'' and ''Action'' scenarios regarding control measures that are external to the transportation system itself, such as vehicle tailpipe or evaporative emission standards, limits on gasoline volatility, vehicle inspection and maintenance programs, and oxygenated or reformulated gasoline or diesel fuel.

(6) The ambient temperatures used for the regional emissions analysis shall be consistent with those used to establish the emissions budget in the applicable implementation plan. All other factors, for example the fraction of travel in a hot stabilized engine mode, must be consistent with the applicable implementation plan, unless modified after interagency consultation according to § 93.105(c)(1)(i) to incorporate additional or more geographically specific information or represent a logically estimated trend in such factors beyond the period considered in the applicable implementation plan.

(7) Reasonable methods shall be used to estimate nonattainment or maintenance area VMT on off-network roadways within the urban transportation planning area, and on roadways outside the urban transportation planning area.

(b) Regional emissions analysis in serious, severe, and extreme ozone nonattainment areas and serious CO nonattainment areas must meet the requirements of paragraphs (b) (1)

through (3) of this section if their metropolitan planning area contains an urbanized area population over 200,000.

(1) By January 1, 1997, estimates of regional transportation-related emissions used to support conformity determinations must be made at a minimum using network-based travel models according to procedures and methods that are available and in practice and supported by current and available documentation. These procedures, methods, and practices are available from DOT and will be updated periodically. Agencies must discuss these modeling procedures and practices through the interagency consultation process, as required by §93.105(c)(1)(i). Network-based travel models must at a minimum satisfy the following requirements:

(i) Network-based travel models must be validated against observed counts (peak and off-peak, if possible) for a base year that is not more than 10 years prior to the date of the conformity determination. Model forecasts must be analyzed for reasonableness and compared to historical trends and other factors, and the results must be documented;

(ii) Land use, population, employment, and other network-based travel model assumptions must be documented and based on the best available information;

(iii) Scenarios of land development and use must be consistent with the future transportation system alternatives for which emissions are being estimated. The distribution of employment and residences for different transportation options must be reasonable;

(iv) A capacity-sensitive assignment methodology must be used, and emissions estimates must be based on a methodology which differentiates between peak and off-peak link volumes and speeds and uses speeds based on final assigned volumes;

(v) Zone-to-zone travel impedances used to distribute trips between origin and destination pairs must be in reasonable agreement with the travel times that are estimated from final assigned traffic volumes. Where use of transit currently is anticipated to be a significant factor in satisfying transportation demand, these times should also be used for modeling mode splits; and

(vi) Network-based travel models must be reasonably sensitive to changes in the time(s), cost(s), and other factors affecting travel choices.

(2) Reasonable methods in accordance with good practice must be used to estimate traffic speeds and delays in a manner that is sensitive to the estimated volume of travel on each roadway segment represented in the network-based travel model.

(3) Highway Performance Monitoring System (HPMS) estimates of vehicle miles traveled (VMT) shall be considered the primary measure of VMT within the portion of the nonattainment or maintenance area and for the functional classes of roadways included in HPMS, for urban areas which are sampled on a separate urban area basis. For areas with network-based travel models, a factor (or factors) may be developed to reconcile and calibrate the network-based travel model estimates of VMT in the base year of its validation to the HPMS estimates for the same period. These factors may then be applied to model estimates of future VMT. In this factoring process, consideration will be given to differences between HPMS and network-based travel models, such as differences in the facility coverage of the HPMS and the modeled network description. Locally developed count- based programs and other departures from these procedures are permitted subject to the interagency consultation procedures of §93.105(c)(1)(i).

(c) In all areas not otherwise subject to paragraph (b) of this section, regional emissions analyses must use those procedures described in paragraph (b) of this section if the use of those procedures has been the previous practice of the MPO. Otherwise, areas not subject to paragraph (b) of this section may estimate regional emissions using any appropriate methods that account for VMT growth by, for example, extrapolating historical VMT or projecting future VMT by considering growth in population and historical growth trends for VMT per person.

These methods must also consider future economic activity, transit alternatives, and transportation system policies.

(d) *PM_{10} from construction-related fugitive dust.* (1) For areas in which the implementation plan does not identify construction-related fugitive PM_{10} as a contributor to the nonattainment problem, the fugitive PM_{10} emissions associated with highway and transit project construction are not required to be considered in the regional emissions analysis.

(2) In PM_{10} nonattainment and maintenance areas with implementation plans which identify construction-related fugitive PM_{10} as a contributor to the nonattainment problem, the regional PM_{10} emissions analysis shall consider construction-related fugitive PM_{10} and shall account for the level of construction activity, the fugitive PM_{10} control measures in the applicable implementation plan, and the dust-producing capacity of the proposed activities.

(e) *Reliance on previous regional emissions analysis.* (1) The TIP may be demonstrated to satisfy the requirements of §§ 93.118 (''Motor vehicle emissions budget'') or 93.119 (''Emission reductions in areas without motor vehicle emissions budgets'') without new regional emissions analysis if the regional emissions analysis already performed for the plan also applies to the TIP. This requires a demonstration that:

(i) The TIP contains all projects which must be started in the TIP's timeframe in order to achieve the highway and transit system envisioned by the transportation plan;

(ii) All TIP projects which are regionally significant are included in the transportation plan with design concept and scope adequate to determine their contribution to the transportation plan's regional emissions at the time of the transportation plan's conformity determination; and

(iii) The design concept and scope of each regionally significant project in the TIP is not significantly different from that described in the transportation plan.

(2) A project which is not from a conforming transportation plan and a conforming TIP may be demonstrated to satisfy the requirements of § 93.118 or § 93.119 without additional regional emissions analysis if allocating funds to the project will not delay the implementation of projects in the transportation plan or TIP which are necessary to achieve the highway and transit system envisioned by the transportation plan, and if the project is either:

(i) Not regionally significant; or

(ii) Included in the conforming transportation plan (even if it is not specifically included in the latest conforming TIP) with design concept and scope adequate to determine its contribution to the transportation plan's regional emissions at the time of the transportation plan's conformity determination, and the design concept and scope of the project is not significantly different from that described in the transportation plan.

§ 93.123 Procedures for determining localized CO and PM_{10} concentrations (hot-spot analysis).

(a) *CO hot-spot analysis.* (1) The demonstrations required by § 93.116 (''Localized CO and PM_{10} violations'') must be based on quantitative analysis using the applicable air quality models, data bases, and other requirements specified in 40 CFR part 51, Appendix W (Guideline on Air Quality Models). These procedures shall be used in the following cases, unless different procedures developed through the interagency consultation process required in § 93.105 and approved by the EPA Regional Administrator are used:

(i) For projects in or affecting locations, areas, or categories of sites which are identified in the applicable implementation plan as sites of violation or possible violation;

(ii) For projects affecting intersections that are at Level-of-Service D, E, or F, or those that will change to Level-of-Service D, E, or F because of increased traffic volumes related to the project;

(iii) For any project affecting one or more of the top three intersections in the nonattainment or maintenance area with highest traffic volumes, as identified in the applicable implementation plan; and

(iv) For any project affecting one or more of the top three intersections in the nonattainment or maintenance area with the worst level of service, as identified in the applicable implementation plan.

(2) In cases other than those described in paragraph (a)(1) of this section, the demonstrations required by § 93.116 may be based on either:

(i) Quantitative methods that represent reasonable and common professional practice; or

(ii) A qualitative consideration of local factors, if this can provide a clear demonstration that the requirements of § 93.116 are met.

(b) *PM_{10} hot-spot analysis.* (1) The hot-spot demonstration required by § 93.116 must be based on quantitative analysis methods for the following types of projects:

(i) Projects which are located at sites at which violations have been verified by monitoring;

(ii) Projects which are located at sites which have vehicle and roadway emission and dispersion characteristics that are essentially identical to those of sites with verified violations (including sites near one at which a violation has been monitored); and

(iii) New or expanded bus and rail terminals and transfer points which increase the number of diesel vehicles congregating at a single location.

(2) Where quantitative analysis methods are not required, the demonstration required by § 93.116 may be based on a qualitative consideration of local factors.

(3) The identification of the sites described in paragraph (b)(1) (i) and (ii) of this section, and other cases where quantitative methods are appropriate, shall be determined through the interagency consultation process required in § 93.105. DOT may choose to make a categorical conformity determination on bus and rail terminals or transfer points based on appropriate modeling of various terminal sizes, configurations, and activity levels.

(4) The requirements for quantitative analysis contained in this paragraph (b) will not take effect until EPA releases modeling guidance on this subject and announces in the FEDERAL REGISTER that these requirements are in effect.

(c) *General requirements.* (1) Estimated pollutant concentrations must be based on the total emissions burden which may result from the implementation of the project, summed together with future background concentrations. The total concentration must be estimated and analyzed at appropriate receptor locations in the area substantially affected by the project.

(2) Hot-spot analyses must include the entire project, and may be performed only after the major design features which will significantly impact concentrations have been identified. The future background concentration should be estimated by multiplying current background by the ratio of future to current traffic and the ratio of future to current emission factors.

(3) Hot-spot analysis assumptions must be consistent with those in the regional emissions analysis for those inputs which are required for both analyses.

(4) PM_{10} or CO mitigation or control measures shall be assumed in the hot-spot analysis only where there are written commitments from the project sponsor and/or operator to implement such measures, as required by § 93.125(a).

(5) CO and PM_{10} hot-spot analyses are not required to consider construction-related activities which cause temporary increases in emissions. Each site which is affected by construction-related activities shall be considered separately, using established ''Guideline'' methods. Temporary increases are defined as those which occur only during the construction phase and last five years or less at any individual site.

§ 93.124 Using the motor vehicle emissions budget in the applicable implementation plan (or implementation plan submission).

(a) In interpreting an applicable implementation plan (or implementation plan submission) with respect to its motor vehicle emissions budget(s), the MPO and DOT may not infer additions to the budget(s) that are not explicitly intended by the implementation plan (or submission). Unless the implementation plan explicitly quantifies the

amount by which motor vehicle emissions could be higher while still allowing a demonstration of compliance with the milestone, attainment, or maintenance requirement and explicitly states an intent that some or all of this additional amount should be available to the MPO and DOT in the emissions budget for conformity purposes, the MPO may not interpret the budget to be higher than the implementation plan's estimate of future emissions. This applies in particular to applicable implementation plans (or submissions) which demonstrate that after implementation of control measures in the implementation plan:

(1) Emissions from all sources will be less than the total emissions that would be consistent with a required demonstration of an emissions reduction milestone;

(2) Emissions from all sources will result in achieving attainment prior to the attainment deadline and/or ambient concentrations in the attainment deadline year will be lower than needed to demonstrate attainment; or

(3) Emissions will be lower than needed to provide for continued maintenance.

(b) If an applicable implementation plan submitted before November 24, 1993, demonstrates that emissions from all sources will be less than the total emissions that would be consistent with attainment and quantifies that ''safety margin,'' the State may submit an implementation plan revision which assigns some or all of this safety margin to highway and transit mobile sources for the purposes of conformity. Such an implementation plan revision, once it is endorsed by the Governor and has been subject to a public hearing, may be used for the purposes of transportation conformity before it is approved by EPA.

(c) A conformity demonstration shall not trade emissions among budgets which the applicable implementation plan (or implementation plan submission) allocates for different pollutants or precursors, or among budgets allocated to motor vehicles and other sources, unless the implementation plan establishes appropriate mechanisms for such trades.

(d) If the applicable implementation plan (or implementation plan submission) estimates future emissions by geographic subarea of the nonattainment area, the MPO and DOT are not required to consider this to establish subarea budgets, unless the applicable implementation plan (or implementation plan submission) explicitly indicates an intent to create such subarea budgets for the purposes of conformity.

(e) If a nonattainment area includes more than one MPO, the implementation plan may establish motor vehicle emissions budgets for each MPO, or else the MPOs must collectively make a conformity determination for the entire nonattainment area.

§ 93.125 Enforceability of design concept and scope and project-level mitigation and control measures.

(a) Prior to determining that a transportation project is in conformity, the MPO, other recipient of funds designated under title 23 U.S.C. or the Federal Transit Laws, FHWA, or FTA must obtain from the project sponsor and/or operator written commitments to implement in the construction of the project and operation of the resulting facility or service any project-level mitigation or control measures which are identified as conditions for NEPA process completion with respect to local PM_{10} or CO impacts. Before a conformity determination is made, written commitments must also be obtained for project-level mitigation or control measures which are conditions for making conformity determinations for a transportation plan or TIP and are included in the project design concept and scope which is used in the regional emissions analysis required by §§ 93.118 (''Motor vehicle emissions budget'') and 93.119 (''Emission reductions in areas without motor vehicle emissions budgets'') or used in the project-level hot-spot analysis required by § 93.116.

(b) Project sponsors voluntarily committing to mitigation measures to facilitate positive conformity determinations must comply with the obligations of such commitments.

(c) The implementation plan revision required in § 51.390 of this chapter shall provide that written commitments to mitigation measures must be obtained

prior to a positive conformity determination, and that project sponsors must comply with such commitments.

(d) If the MPO or project sponsor believes the mitigation or control measure is no longer necessary for conformity, the project sponsor or operator may be relieved of its obligation to implement the mitigation or control measure if it can demonstrate that the applicable hot-spot requirements of § 93.116, emission budget requirements of § 93.118, and emission reduction requirements of § 93.119 are satisfied without the mitigation or control measure, and so notifies the agencies involved in the interagency consultation process required under § 93.105. The MPO and DOT must find that the transportation plan and TIP still satisfy the applicable requirements of §§ 93.118 and/or 93.119 and that the project still satisfies the requirements of § 93.116, and therefore that the conformity determinations for the transportation plan, TIP, and project are still valid. This finding is subject to the applicable public consultation requirements in § 93.105(e) for conformity determinations for projects.

§ 93.126 Exempt projects.

Notwithstanding the other requirements of this subpart, highway and transit projects of the types listed in Table 2 of this section are exempt from the requirement to determine conformity. Such projects may proceed toward implementation even in the absence of a conforming transportation plan and TIP. A particular action of the type listed in Table 2 of this section is not exempt if the MPO in consultation with other agencies (see § 93.105(c)(1)(iii)), the EPA, and the FHWA (in the case of a highway project) or the FTA (in the case of a transit project) concur that it has potentially adverse emissions impacts for any reason. States and MPOs must ensure that exempt projects do not interfere with TCM implementation. Table 2 follows:

TABLE 2—EXEMPT PROJECTS

Safety

Railroad/highway crossing.
Hazard elimination program.
Safer non-Federal-aid system roads.
Shoulder improvements.
Increasing sight distance.
Safety improvement program.
Traffic control devices and operating assistance other than signalization projects.
Railroad/highway crossing warning devices.
Guardrails, median barriers, crash cushions.
Pavement resurfacing and/or rehabilitation.
Pavement marking demonstration.
Emergency relief (23 U.S.C. 125).
Fencing.
Skid treatments.
Safety roadside rest areas.
Adding medians.
Truck climbing lanes outside the urbanized area.
Lighting improvements.
Widening narrow pavements or reconstructing bridges (no additional travel lanes).
Emergency truck pullovers.

Mass Transit

Operating assistance to transit agencies.
Purchase of support vehicles.
Rehabilitation of transit vehicles[1].
Purchase of office, shop, and operating equipment for existing facilities.
Purchase of operating equipment for vehicles (e.g., radios, fareboxes, lifts, etc.).
Construction or renovation of power, signal, and communications systems.
Construction of small passenger shelters and information kiosks.
Reconstruction or renovation of transit buildings and structures (e.g., rail or bus buildings, storage and maintenance facilities, stations, terminals, and ancillary structures).
Rehabilitation or reconstruction of track structures, track, and trackbed in existing rights-of-way.
Purchase of new buses and rail cars to replace existing vehicles or for minor expansions of the fleet[1].
Construction of new bus or rail storage/maintenance facilities categorically excluded in 23 CFR part 771.

Air Quality

Continuation of ride-sharing and van-pooling promotion activities at current levels.
Bicycle and pedestrian facilities.

Other

Specific activities which do not involve or lead directly to construction, such as:
- Planning and technical studies.
- Grants for training and research programs.
- Planning activities conducted pursuant to titles 23 and 49 U.S.C.
- Federal-aid systems revisions.

Engineering to assess social, economic, and environmental effects of the proposed action or alternatives to that action.
Noise attenuation.

Emergency or hardship advance land acquisitions (23 CFR 712.204(d)).
Acquisition of scenic easements.
Plantings, landscaping, etc.
Sign removal.
Directional and informational signs.
Transportation enhancement activities (except rehabilitation and operation of historic transportation buildings, structures, or facilities).
Repair of damage caused by natural disasters, civil unrest, or terrorist acts, except projects involving substantial functional, locational or capacity changes.

NOTE: [1]In PM_{10} nonattainment or maintenance areas, such projects are exempt only if they are in compliance with control measures in the applicable implementation plan.

§ 93.127 Projects exempt from regional emissions analyses.

Notwithstanding the other requirements of this subpart, highway and transit projects of the types listed in Table 3 of this section are exempt from regional emissions analysis requirements. The local effects of these projects with respect to CO or PM_{10} concentrations must be considered to determine if a hot-spot analysis is required prior to making a project-level conformity determination. These projects may then proceed to the project development process even in the absence of a conforming transportation plan and TIP. A particular action of the type listed in Table 3 of this section is not exempt from regional emissions analysis if the MPO in consultation with other agencies (see § 93.105(c)(1)(iii)), the EPA, and the FHWA (in the case of a highway project) or the FTA (in the case of a transit project) concur that it has potential regional impacts for any reason. Table 3 follows:

TABLE 3—PROJECTS EXEMPT FROM REGIONAL EMISSIONS ANALYSES

Intersection channelization projects.
Intersection signalization projects at individual intersections.
Interchange reconfiguration projects.
Changes in vertical and horizontal alignment.
Truck size and weight inspection stations.
Bus terminals and transfer points.

§ 93.128 Traffic signal synchronization projects.

Traffic signal synchronization projects may be approved, funded, and implemented without satisfying the requirements of this subpart. However, all subsequent regional emissions analyses required by §§ 93.118 and 93.119 for transportation plans, TIPs, or projects not from a conforming plan and TIP must include such regionally significant traffic signal synchronization projects.

§ 93.129 Special exemptions from conformity requirements for pilot program areas.

EPA and DOT may exempt no more than six areas for no more than three years from certain requirements of this subpart if these areas are selected to participate in a conformity pilot program and have developed alternative requirements that have been approved by EPA as an implementation plan revision in accordance with § 51.390 of this chapter. For the duration of the pilot program, areas selected to participate in the pilot program must comply with the conformity requirements of the pilot area's implementation plan revision for § 51.390 of this chapter and all other requirements in 40 CFR parts 51 and 93 that are not covered by the pilot area's implementation plan revision for § 51.390 of this chapter. The alternative conformity requirements in conjunction with any applicable state and/or federal conformity requirements must be proposed to fulfill all of the requirements of and achieve results equivalent to or better than section 176(c) of the Clean Air Act. After the three-year duration of the pilot program has expired, areas will again be subject to all of the requirements of this subpart and 40 CFR part 51, subpart T, and/or to the requirements of any implementation plan revision that was previously approved by EPA in accordance with § 51.390 of this chapter.

[64 FR 13483, Mar. 18, 1999]

Subpart B—Determining Conformity of General Federal Actions to State or Federal Implementation Plans

SOURCE: 58 FR 63253, Nov. 30, 1993, unless otherwise noted.

§ 93.150 Prohibition.

(a) No department, agency or instrumentality of the Federal Government shall engage in, support in any way or provide financial assistance for, license or permit, or approve any activity which does not conform to an applicable implementation plan.

(b) A Federal agency must make a determination that a Federal action conforms to the applicable implementation plan in accordance with the requirements of this subpart before the action is taken.

(c) Paragraph (b) of this section does not include Federal actions where:

(1) A National Environmental Policy Act (NEPA) analysis was completed as evidenced by a final environmental assessment (EA), environmental impact statement (EIS), or finding of no significant impact (FONSI) that was prepared prior to January 31, 1994; or

(2)(i) Prior to January 31, 1994, an environmental analysis was commenced or a contract was awarded to develop the specific environmental analysis;

(ii) Sufficient environmental analysis is completed by March 15, 1994 so that the Federal agency may determine that the Federal action is in conformity with the specific requirements and the purposes of the applicable SIP pursuant to the agency's affirmative obligation under section 176(c) of the Clean Air Act (Act); and

(iii) A written determination of conformity under section 176(c) of the Act has been made by the Federal agency responsible for the Federal action by March 15, 1994.

(d) Notwithstanding any provision of this subpart, a determination that an action is in conformance with the applicable implementation plan does not exempt the action from any other requirements of the applicable implementation plan, the National Environmental Policy Act (NEPA), or the Clean Air Act (Act).

[58 FR 63253, Nov. 30, 1993; 58 FR 67442, Dec. 21, 1993]

§ 93.151 State implementation plan (SIP) revision.

The Federal conformity rules under this subpart, in addition to any existing applicable State requirements, establish the conformity criteria and procedures necessary to meet the Act requirements until such time as the required conformity SIP revision is approved by EPA. A State's conformity provisions must contain criteria and procedures that are no less stringent than the requirements described in this subpart. A State may establish more stringent conformity criteria and procedures only if they apply equally to nonfederal as well as Federal entities. Following EPA approval of the State conformity provisions (or a portion thereof) in a revision to the applicable SIP, the approved (or approved portion of the) State criteria and procedures would govern conformity determinations and the Federal conformity regulations contained in this part would apply only for the portion, if any, of the State's conformity provisions that is not approved by EPA. In addition, any previously applicable SIP requirements relating to conformity remain enforceable until the State revises its SIP to specifically remove them from the SIP and that revision is approved by EPA.

§ 93.152 Definitions.

Terms used but not defined in this part shall have the meaning given them by the Act and EPA's regulations (40 CFR chapter I), in that order of priority.

Affected Federal land manager means the Federal agency or the Federal official charged with direct responsibility for management of an area designated as Class I under the Act (42 U.S.C. 7472) that is located within 100 km of the proposed Federal action.

Applicable implementation plan or applicable SIP means the portion (or portions) of the SIP or most recent revision thereof, which has been approved under section 110 of the Act, or promulgated under section 110(c) of the Act (Federal implementation plan), or promulgated or approved pursuant to regulations promulgated under section 301(d) of the Act and which implements the relevant requirements of the Act.

Areawide air quality modeling analysis means an assessment on a scale that includes the entire nonattainment or maintenance area which uses an air

quality dispersion model to determine the effects of emissions on air quality.

Cause or contribute to a new violation means a Federal action that:

(1) Causes a new violation of a national ambient air quality standard (NAAQS) at a location in a nonattainment or maintenance area which would otherwise not be in violation of the standard during the future period in question if the Federal action were not taken; or

(2) Contributes, in conjunction with other reasonably foreseeable actions, to a new violation of a NAAQS at a location in a nonattainment or maintenance area in a manner that would increase the frequency or severity of the new violation.

Caused by, as used in the terms ''direct emissions'' and ''indirect emissions,'' means emissions that would not otherwise occur in the absence of the Federal action.

Criteria pollutant or standard means any pollutant for which there is established a NAAQS at 40 CFR part 50.

Direct emissions means those emissions of a criteria pollutant or its precursors that are caused or initiated by the Federal action and occur at the same time and place as the action.

Emergency means a situation where extremely quick action on the part of the Federal agencies involved is needed and where the timing of such Federal activities makes it impractical to meet the requirements of this subpart, such as natural disasters like hurricanes or earthquakes, civil disturbances such as terrorist acts and military mobilizations.

Emissions budgets are those portions of the applicable SIP's projected emission inventories that describe the levels of emissions (mobile, stationary, area, etc.) that provide for meeting reasonable further progress milestones, attainment, and/or maintenance for any criteria pollutant or its precursors.

Emissions offsets, for purposes of § 93.158, are emissions reductions which are quantifiable, consistent with the applicable SIP attainment and reasonable further progress demonstrations, surplus to reductions required by, and credited to, other applicable SIP provisions, enforceable at both the State and Federal levels, and permanent within the timeframe specified by the program.

Emissions that a Federal agency has a continuing program responsibility for means emissions that are specifically caused by an agency carrying out its authorities, and does not include emissions that occur due to subsequent activities, unless such activities are required by the Federal agency. When an agency, in performing its normal program responsibilities, takes actions itself or imposes conditions that result in air pollutant emissions by a non-Federal entity taking subsequent actions, such emissions are covered by the meaning of a continuing program responsibility.

EPA means the Environmental Protection Agency.

Federal action means any activity engaged in by a department, agency, or instrumentality of the Federal government, or any activity that a department, agency or instrumentality of the Federal government supports in any way, provides financial assistance for, licenses, permits, or approves, other than activities related to transportation plans, programs, and projects developed, funded, or approved under title 23 U.S.C. or the Federal Transit Act (49 U.S.C. 1601 *et seq.*). Where the Federal action is a permit, license, or other approval for some aspect of a non-Federal undertaking, the relevant activity is the part, portion, or phase of the non-Federal undertaking that requires the Federal permit, license, or approval.

Federal agency means, for purposes of this subpart, a Federal department, agency, or instrumentality of the Federal government.

Increase the frequency or severity of any existing violation of any standard in any area means to cause a nonattainment area to exceed a standard more often or to cause a violation at a greater concentration than previously existed and/or would otherwise exist during the future period in question, if the project were not implemented.

Indirect emissions means those emissions of a criteria pollutant or its precursors that:

(1) Are caused by the Federal action, but may occur later in time and/or may be further removed in distance from

the action itself but are still reasonably foreseeable; and

(2) The Federal agency can practicably control and will maintain control over due to a continuing program responsibility of the Federal agency.

Local air quality modeling analysis means an assessment of localized impacts on a scale smaller than the entire nonattainment or maintenance area, including, for example, congested roadway intersections and highways or transit terminals, which uses an air quality dispersion model to determine the effects of emissions on air quality.

Maintenance area means an area with a maintenance plan approved under section 175A of the Act.

Maintenance plan means a revision to the applicable SIP, meeting the requirements of section 175A of the Act.

Metropolitan Planning Organization (MPO) is that organization designated as being responsible, together with the State, for conducting the continuing, cooperative, and comprehensive planning process under 23 U.S.C. 134 and 49 U.S.C. 1607.

Milestone has the meaning given in sections 182(g)(1) and 189(c)(1) of the Act.

National ambient air quality standards (NAAQS) are those standards established pursuant to section 109 of the Act and include standards for carbon monoxide (CO), lead (Pb), nitrogen dioxide (NO_2), ozone, particulate matter (PM–10), and sulfur dioxide (SO_2).

NEPA is the National Environmental Policy Act of 1969, as amended (42 U.S.C. 4321 *et seq.*).

Nonattainment area means an area designated as nonattainment under section 107 of the Act and described in 40 CFR part 81.

Precursors of a criteria pollutant are:

(1) For ozone, nitrogen oxides (NOx), unless an area is exempted from NOx requirements under section 182(f) of the Act, and volatile organic compounds (VOC); and

(2) For PM–10, those pollutants described in the PM–10 nonattainment area applicable SIP as significant contributors to the PM–10 levels.

Reasonably foreseeable emissions are projected future indirect emissions that are identified at the time the conformity determination is made; the location of such emissions is known and the emissions are quantifiable, as described and documented by the Federal agency based on its own information and after reviewing any information presented to the Federal agency.

Regional water and/or wastewater projects include construction, operation, and maintenance of water or wastewater conveyances, water or wastewater treatment facilities, and water storage reservoirs which affect a large portion of a nonattainment or maintenance area.

Regionally significant action means a Federal action for which the direct and indirect emissions of any pollutant represent 10 percent or more of a nonattainment or maintenance area's emission inventory for that pollutant.

Total of direct and indirect emissions means the sum of direct and indirect emissions increases and decreases caused by the Federal action; i.e., the ''net'' emissions considering all direct and indirect emissions. The portion of emissions which are exempt or presumed to conform under § 93.153 (c), (d), (e), or (f) are not included in the ''total of direct and indirect emissions.'' The ''total of direct and indirect emissions'' includes emissions of criteria pollutants and emissions of precursors of criteria pollutants.

§ 93.153 Applicability.

(a) Conformity determinations for Federal actions related to transportation plans, programs, and projects developed, funded, or approved under title 23 U.S.C. or the Federal Transit Act (49 U.S.C. 1601 *et seq.*) must meet the procedures and criteria of 40 CFR part 51, subpart T, in lieu of the procedures set forth in this subpart.

(b) For Federal actions not covered by paragraph (a) of this section, a conformity determination is required for each pollutant where the total of direct and indirect emissions in a nonattainment or maintenance area caused by a Federal action would equal or exceed any of the rates in paragraphs (b)(1) or (2) of this section.

(1) For purposes of paragraph (b) of this section, the following rates apply in nonattainment areas (NAA's):

	Tons/ year
Ozone (VOC's or NO_X):	
Serious NAA's	50
Severe NAA's	25
Extreme NAA's	10
Other ozone NAA's outside an ozone transport region	100
Marginal and moderate NAA's inside an ozone transport region:.	
VOC	50
NO_X	100
Carbon monoxide:	
All NAA's	100
SO_2 or $NO_{2\leq}$	
All NAA's	100
PM–10:	
Moderate NAA's	100
Serious NAA's	70
Pb:	
All NAA's	25

(2) For purposes of paragraph (b) of this section, the following rates apply in maintenance areas:

	Tons/ year
Ozone (NO_X), SO_2 or $NO_{2\leq}$	
All Maintenance Areas	100
Ozone (VOC's):	
Maintenance areas inside an ozone transport region	50
Maintenance areas outside an ozone transport region	100
Carbon monoxide:	
All Maintenance Areas	100
PM–10:	
All Maintenance Areas	100
Pb:	
All Maintenance Areas	25

(c) The requirements of this subpart shall not apply to the following Federal actions:

(1) Actions where the total of direct and indirect emissions are below the emissions levels specified in paragraph (b) of this section.

(2) Actions which would result in no emissions increase or an increase in emissions that is clearly de minimis:

(i) Judicial and legislative proceedings.

(ii) Continuing and recurring activities such as permit renewals where activities conducted will be similar in scope and operation to activities currently being conducted.

(iii) Rulemaking and policy development and issuance.

(iv) Routine maintenance and repair activities, including repair and maintenance of administrative sites, roads, trails, and facilities.

(v) Civil and criminal enforcement activities, such as investigations, audits, inspections, examinations, prosecutions, and the training of law enforcement personnel.

(vi) Administrative actions such as personnel actions, organizational changes, debt management or collection, cash management, internal agency audits, program budget proposals, and matters relating to the administration and collection of taxes, duties and fees.

(vii) The routine, recurring transportation of materiel and personnel.

(viii) Routine movement of mobile assets, such as ships and aircraft, in home port reassignments and stations (when no new support facilities or personnel are required) to perform as operational groups and/or for repair or overhaul.

(ix) Maintenance dredging and debris disposal where no new depths are required, applicable permits are secured, and disposal will be at an approved disposal site.

(x) Actions, such as the following, with respect to existing structures, properties, facilities and lands where future activities conducted will be similar in scope and operation to activities currently being conducted at the existing structures, properties, facilities, and lands; for example, relocation of personnel, disposition of federally-owned existing structures, properties, facilities, and lands, rent subsidies, operation and maintenance cost subsidies, the exercise of receivership or conservatorship authority, assistance in purchasing structures, and the production of coins and currency.

(xi) The granting of leases, licenses such as for exports and trade, permits, and easements where activities conducted will be similar in scope and operation to activities currently being conducted.

(xii) Planning, studies, and provision of technical assistance.

(xiii) Routine operation of facilities, mobile assets and equipment.

(xiv) Transfers of ownership, interests, and titles in land, facilities, and real and personal properties, regardless of the form or method of the transfer.

(xv) The designation of empowerment zones, enterprise communities, or viticultural areas.

(xvi) Actions by any of the Federal banking agencies or the Federal Reserve Banks, including actions regarding charters, applications, notices, licenses, the supervision or examination of depository institutions or depository institution holding companies, access to the discount window, or the provision of financial services to banking organizations or to any department, agency or instrumentality of the United States.

(xvii) Actions by the Board of Governors of the Federal Reserve System or any Federal Reserve Bank necessary to effect monetary or exchange rate policy.

(xviii) Actions that implement a foreign affairs function of the United States.

(xix) Actions (or portions thereof) associated with transfers of land, facilities, title, and real properties through an enforceable contract or lease agreement where the delivery of the deed is required to occur promptly after a specific, reasonable condition is met, such as promptly after the land is certified as meeting the requirements of CERCLA, and where the Federal agency does not retain continuing authority to control emissions associated with the lands, facilities, title, or real properties.

(xx) Transfers of real property, including land, facilities, and related personal property from a Federal entity to another Federal entity and assignments of real property, including land, facilities, and related personal property from a Federal entity to another Federal entity for subsequent deeding to eligible applicants.

(xxi) Actions by the Department of the Treasury to effect fiscal policy and to exercise the borrowing authority of the United States.

(3) Actions where the emissions are not reasonably foreseeable, such as the following:

(i) Initial Outer Continental Shelf lease sales which are made on a broad scale and are followed by exploration and development plans on a project level.

(ii) Electric power marketing activities that involve the acquisition, sale and transmission of electric energy.

(4) Actions which implement a decision to conduct or carry out a conforming program such as prescribed burning actions which are consistent with a conforming land management plan.

(d) Notwithstanding the other requirements of this subpart, a conformity determination is not required for the following Federal actions (or portion thereof):

(1) The portion of an action that includes major new or modified stationary sources that require a permit under the new source review (NSR) program (section 173 of the Act) or the prevention of significant deterioration program (title I, part C of the Act).

(2) Actions in response to emergencies or natural disasters such as hurricanes, earthquakes, etc., which are commenced on the order of hours or days after the emergency or disaster and, if applicable, which meet the requirements of paragraph (e) of this section.

(3) Research, investigations, studies, demonstrations, or training (other than those exempted under paragraph (c)(2) of this section), where no environmental detriment is incurred and/or, the particular action furthers air quality research, as determined by the State agency primarily responsible for the applicable SIP;

(4) Alteration and additions of existing structures as specifically required by new or existing applicable environmental legislation or environmental regulations (e.g., hush houses for aircraft engines and scrubbers for air emissions).

(5) Direct emissions from remedial and removal actions carried out under the Comprehensive Environmental Response, Compensation and Liability Act and associated regulations to the extent such emissions either comply with the substantive requirements of the PSD/NSR permitting program or are exempted from other environmental regulation under the provisions of CERCLA and applicable regulations issued under CERCLA.

(e) Federal actions which are part of a continuing response to an emergency

or disaster under paragraph (d)(2) of this section and which are to be taken more than 6 months after the commencement of the response to the emergency or disaster under paragraph (d)(2) of this section are exempt from the requirements of this subpart only if:

(1) The Federal agency taking the actions makes a written determination that, for a specified period not to exceed an additional 6 months, it is impractical to prepare the conformity analyses which would otherwise be required and the actions cannot be delayed due to overriding concerns for public health and welfare, national security interests and foreign policy commitments; or

(2) For actions which are to be taken after those actions covered by paragraph (e)(1) of this section, the Federal agency makes a new determination as provided in paragraph (e)(1) of this section.

(f) Notwithstanding other requirements of this subpart, actions specified by individual Federal agencies that have met the criteria set forth in either paragraph (g)(1) or (g)(2) of this section and the procedures set forth in paragraph (h) of this section are presumed to conform, except as provided in paragraph (j) of this section.

(g) The Federal agency must meet the criteria for establishing activities that are presumed to conform by fulfilling the requirements set forth in either paragraph (g)(1) or (g)(2) of this section:

(1) The Federal agency must clearly demonstrate using methods consistent with this subpart that the total of direct and indirect emissions from the type of activities which would be presumed to conform would not:

(i) Cause or contribute to any new violation of any standard in any area;

(ii) Interfere with provisions in the applicable SIP for maintenance of any standard;

(iii) Increase the frequency or severity of any existing violation of any standard in any area; or

(iv) Delay timely attainment of any standard or any required interim emission reductions or other milestones in any area including, where applicable, emission levels specified in the applicable SIP for purposes of:

(A) A demonstration of reasonable further progress;

(B) A demonstration of attainment; or

(C) A maintenance plan; or

(2) The Federal agency must provide documentation that the total of direct and indirect emissions from such future actions would be below the emission rates for a conformity determination that are established in paragraph (b) of this section, based, for example, on similar actions taken over recent years.

(h) In addition to meeting the criteria for establishing exemptions set forth in paragraphs (g)(1) or (g)(2) of this section, the following procedures must also be complied with to presume that activities will conform:

(1) The Federal agency must identify through publication in the FEDERAL REGISTER its list of proposed activities that are presumed to conform and the basis for the presumptions;

(2) The Federal agency must notify the appropriate EPA Regional Office(s), State and local air quality agencies and, where applicable, the agency designated under section 174 of the Act and the MPO and provide at least 30 days for the public to comment on the list of proposed activities presumed to conform;

(3) The Federal agency must document its response to all the comments received and make the comments, response, and final list of activities available to the public upon request; and

(4) The Federal agency must publish the final list of such activities in the FEDERAL REGISTER.

(i) Notwithstanding the other requirements of this subpart, when the total of direct and indirect emissions of any pollutant from a Federal action does not equal or exceed the rates specified in paragraph (b) of this section, but represents 10 percent or more of a nonattainment or maintenance area's total emissions of that pollutant, the action is defined as a regionally significant action and the requirements of § 93.150 and §§ 93.155 through 93.160 shall apply for the Federal action.

(j) Where an action otherwise presumed to conform under paragraph (f) of this section is a regionally significant action or does not in fact meet one of the criteria in paragraph (g)(1) of this section, that action shall not be presumed to conform and the requirements of § 93.150 and §§ 93.155 through 93.160 shall apply for the Federal action.

(k) The provisions of this subpart shall apply in all nonattainment and maintenance areas.

§ 93.154 Conformity analysis.

Any Federal department, agency, or instrumentality of the Federal government taking an action subject to this subpart must make its own conformity determination consistent with the requirements of this subpart. In making its conformity determination, a Federal agency must consider comments from any interested parties. Where multiple Federal agencies have jurisdiction for various aspects of a project, a Federal agency may choose to adopt the analysis of another Federal agency or develop its own analysis in order to make its conformity determination.

§ 93.155 Reporting requirements.

(a) A Federal agency making a conformity determination under § 93.158 must provide to the appropriate EPA Regional Office(s), State and local air quality agencies and, where applicable, affected Federal land managers, the agency designated under section 174 of the Act and the MPO a 30 day notice which describes the proposed action and the Federal agency's draft conformity determination on the action.

(b) A Federal agency must notify the appropriate EPA Regional Office(s), State and local air quality agencies and, where applicable, affected Federal land managers, the agency designated under section 174 of the Clean Air Act and the MPO within 30 days after making a final conformity determination under § 93.158.

§ 93.156 Public participation.

(a) Upon request by any person regarding a specific Federal action, a Federal agency must make available for review its draft conformity determination under § 93.158 with supporting materials which describe the analytical methods and conclusions relied upon in making the applicability analysis and draft conformity determination.

(b) A Federal agency must make public its draft conformity determination under § 93.158 by placing a notice by prominent advertisement in a daily newspaper of general circulation in the area affected by the action and by providing 30 days for written public comment prior to taking any formal action on the draft determination. This comment period may be concurrent with any other public involvement, such as occurs in the NEPA process.

(c) A Federal agency must document its response to all the comments received on its draft conformity determination under § 93.158 and make the comments and responses available, upon request by any person regarding a specific Federal action, within 30 days of the final conformity determination.

(d) A Federal agency must make public its final conformity determination under § 93.158 for a Federal action by placing a notice by prominent advertisement in a daily newspaper of general circulation in the area affected by the action within 30 days of the final conformity determination.

§ 93.157 Frequency of conformity determinations.

(a) The conformity status of a Federal action automatically lapses 5 years from the date a final conformity determination is reported under § 93.155, unless the Federal action has been completed or a continuous program has been commenced to implement that Federal action within a reasonable time.

(b) Ongoing Federal activities at a given site showing continuous progress are not new actions and do not require periodic redeterminations so long as such activities are within the scope of the final conformity determination reported under § 93.155.

(c) If, after the conformity determination is made, the Federal action is changed so that there is an increase in the total of direct and indirect emissions, above the levels in § 93.153(b), a new conformity determination is required.

§ 93.158 Criteria for determining conformity of general Federal actions.

(a) An action required under § 93.153 to have a conformity determination for a specific pollutant, will be determined to conform to the applicable SIP if, for each pollutant that exceeds the rates in § 93.153(b), or otherwise requires a conformity determination due to the total of direct and indirect emissions from the action, the action meets the requirements of paragraph (c) of this section, and meets any of the following requirements:

(1) For any criteria pollutant, the total of direct and indirect emissions from the action are specifically identified and accounted for in the applicable SIP's attainment or maintenance demonstration;

(2) For ozone or nitrogen dioxide, the total of direct and indirect emissions from the action are fully offset within the same nonattainment or maintenance area through a revision to the applicable SIP or a similarly enforceable measure that effects emission reductions so that there is no net increase in emissions of that pollutant;

(3) For any criteria pollutant, except ozone and nitrogen dioxide, the total of direct and indirect emissions from the action meet the requirements:

(i) Specified in paragraph (b) of this section, based on areawide air quality modeling analysis and local air quality modeling analysis; or

(ii) Meet the requirements of paragraph (a)(5) of this section and, for local air quality modeling analysis, the requirement of paragraph (b) of this section;

(4) For CO or PM–10—

(i) Where the State agency primarily responsible for the applicable SIP determines that an areawide air quality modeling analysis is not needed, the total of direct and indirect emissions from the action meet the requirements specified in paragraph (b) of this section, based on local air quality modeling analysis; or

(ii) Where the State agency primarily responsible for the applicable SIP determines that an areawide air quality modeling analysis is appropriate and that a local air quality modeling analysis is not needed, the total of direct and indirect emissions from the action meet the requirements specified in paragraph (b) of this section, based on areawide modeling, or meet the requirements of paragraph (a)(5) of this section; or

(5) For ozone or nitrogen dioxide, and for purposes of paragraphs (a)(3)(11) and (a)(4)(ii) of this section, each portion of the action or the action as a whole meets any of the following requirements:

(i) Where EPA has approved a revision to an area's attainment or maintenance demonstration after 1990 and the State makes a determination as provided in paragraph (a)(5)(i)(A) of this section or where the State makes a commitment as provided in paragraph (a)(5)(i)(B) of this section:

(A) The total of direct and indirect emissions from the action (or portion thereof) is determined and documented by the State agency primarily responsible for the applicable SIP to result in a level of emissions which, together with all other emissions in the nonattainment (or maintenance) area, would not exceed the emissions budgets specified in the applicable SIP;

(B) The total of direct and indirect emissions from the action (or portion thereof) is determined by the State agency responsible for the applicable SIP to result in a level of emissions which, together with all other emissions in the nonattainment (or maintenance) area, would exceed an emissions budget specified in the applicable SIP and the State Governor or the Governor's designee for SIP actions makes a written commitment to EPA which includes the following:

(*1*) A specific schedule for adoption and submittal of a revision to the SIP which would achieve the needed emission reductions prior to the time emissions from the Federal action would occur;

(*2*) Identification of specific measures for incorporation into the SIP which would result in a level of emissions which, together with all other emissions in the nonattainment or maintenance area, would not exceed any emissions budget specified in the applicable SIP;

(*3*) A demonstration that all existing applicable SIP requirements are being

implemented in the area for the pollutants affected by the Federal action, and that local authority to implement additional requirements has been fully pursued;

(*4*) A determination that the responsible Federal agencies have required all reasonable mitigation measures associated with their action; and

(*5*) Written documentation including all air quality analyses supporting the conformity determination;

(C) Where a Federal agency made a conformity determination based on a State commitment under paragraph (a)(5)(i)(B) of this section, such a State commitment is automatically deemed a call for a SIP revision by EPA under section 110(k)(5) of the Act, effective on the date of the Federal conformity determination and requiring response within 18 months or any shorter time within which the State commits to revise the applicable SIP;

(ii) The action (or portion thereof), as determined by the MPO, is specifically included in a current transportation plan and transportation improvement program which have been found to conform to the applicable SIP under 40 CFR part 51, subpart T, or 40 CFR part 93, subpart A;

(iii) The action (or portion thereof) fully offsets its emissions within the same nonattainment or maintenance area through a revision to the applicable SIP or an equally enforceable measure that effects emission reductions equal to or greater than the total of direct and indirect emissions from the action so that there is no net increase in emissions of that pollutant;

(iv) Where EPA has not approved a revision to the relevant SIP attainment or maintenance demonstration since 1990, the total of direct and indirect emissions from the action for the future years (described in § 93.159(d) do not increase emissions with respect to the baseline emissions:

(A) The baseline emissions reflect the historical activity levels that occurred in the geographic area affected by the proposed Federal action during:

(*1*) Calendar year 1990;

(*2*) The calendar year that is the basis for the classification (or, where the classification is based on multiple years, the most representative year), if a classification is promulgated in 40 CFR part 81; or

(*3*) The year of the baseline inventory in the PM–10 applicable SIP;

(B) The baseline emissions are the total of direct and indirect emissions calculated for the future years (described in § 93.159(d)) using the historic activity levels (described in paragraph (a)(5)(iv)(A) of this section) and appropriate emission factors for the future years; or

(v) Where the action involves regional water and/or wastewater projects, such projects are sized to meet only the needs of population projections that are in the applicable SIP.

(b) The areawide and/or local air quality modeling analyses must:

(1) Meet the requirements in § 93.159; and

(2) Show that the action does not:

(i) Cause or contribute to any new violation of any standard in any area; or

(ii) Increase the frequency or severity of any existing violation of any standard in any area.

(c) Notwithstanding any other requirements of this section, an action subject to this subpart may not be determined to conform to the applicable SIP unless the total of direct and indirect emissions from the action is in compliance or consistent with all relevant requirements and milestones contained in the applicable SIP, such as elements identified as part of the reasonable further progress schedules, assumptions specified in the attainment or maintenance demonstration, prohibitions, numerical emission limits, and work practice requirements.

(d) Any analyses required under this section must be completed, and any mitigation requirements necessary for a finding of conformity must be identified before the determination of conformity is made.

§ 93.159 Procedures for conformity determinations of general Federal actions.

(a) The analyses required under this subpart must be based on the latest planning assumptions.

(1) All planning assumptions must be derived from the estimates of population, employment, travel, and congestion most recently approved by the MPO, or other agency authorized to make such estimates, where available.

(2) Any revisions to these estimates used as part of the conformity determination, including projected shifts in geographic location or level of population, employment, travel, and congestion, must be approved by the MPO or other agency authorized to make such estimates for the urban area.

(b) The analyses required under this subpart must be based on the latest and most accurate emission estimation techniques available as described below, unless such techniques are inappropriate. If such techniques are inappropriate and written approval of the EPA Regional Administrator is obtained for any modification or substitution, they may be modified or another technique substituted on a case-by-case basis or, where appropriate, on a generic basis for a specific Federal agency program.

(1) For motor vehicle emissions, the most current version of the motor vehicle emissions model specified by EPA and available for use in the preparation or revision of SIPs in that State must be used for the conformity analysis as specified in paragraphs (b)(1)(i) and (ii) of this section:

(i) The EPA must publish in the FEDERAL REGISTER a notice of availability of any new motor vehicle emissions model; and

(ii) A grace period of 3 months shall apply during which the motor vehicle emissions model previously specified by EPA as the most current version may be used. Conformity analyses for which the analysis was begun during the grace period or no more than 3 years before the FEDERAL REGISTER notice of availability of the latest emission model may continue to use the previous version of the model specified by EPA.

(2) For non-motor vehicle sources, including stationary and area source emissions, the latest emission factors specified by EPA in the ''Compilation of Air Pollutant Emission Factors (AP–42)''[1] must be used for the conformity analysis unless more accurate emission data are available, such as actual stack test data from stationary sources which are part of the conformity analysis.

(c) The air quality modeling analyses required under this subpart must be based on the applicable air quality models, data bases, and other requirements specified in the most recent version of the ''Guideline on Air Quality Models (Revised)'' (1986), including supplements (EPA publication no. 450/2–78–027R)[2], unless:

(1) The guideline techniques are inappropriate, in which case the model may be modified or another model substituted on a case-by-case basis or, where appropriate, on a generic basis for a specific Federal agency program; and

(2) Written approval of the EPA Regional Administrator is obtained for any modification or substitution.

(d) The analyses required under this subpart, except § 93.158(a)(1), must be based on the total of direct and indirect emissions from the action and must reflect emission scenarios that are expected to occur under each of the following cases:

(1) The Act mandated attainment year or, if applicable, the farthest year for which emissions are projected in the maintenance plan;

(2) The year during which the total of direct and indirect emissions from the action is expected to be the greatest on an annual basis; and

(3) Any year for which the applicable SIP specifies an emissions budget.

§ 93.160 Mitigation of air quality impacts.

(a) Any measures that are intended to mitigate air quality impacts must be identified and the process for implementation and enforcement of such measures must be described, including an implementation schedule containing explicit timelines for implementation.

[1] Copies may be obtained from the Technical Support Division of OAQPS, EPA, MD–14, Research Triangle Park, NC 27711.

[2] See footnote 1 at § 93.159(b)(2).

(b) Prior to determining that a Federal action is in conformity, the Federal agency making the conformity determination must obtain written commitments from the appropriate persons or agencies to implement any mitigation measures which are identified as conditions for making conformity determinations.

(c) Persons or agencies voluntarily committing to mitigation measures to facilitate positive conformity determinations must comply with the obligations of such commitments.

(d) In instances where the Federal agency is licensing, permitting or otherwise approving the action of another governmental or private entity, approval by the Federal agency must be conditioned on the other entity meeting the mitigation measures set forth in the conformity determination.

(e) When necessary because of changed circumstances, mitigation measures may be modified so long as the new mitigation measures continue to support the conformity determination. Any proposed change in the mitigation measures is subject to the reporting requirements of § 93.156 and the public participation requirements of § 93.157.

(f) The implementation plan revision required in § 93.151 shall provide that written commitments to mitigation measures must be obtained prior to a positive conformity determination and that such commitments must be fulfilled.

(g) After a State revises its SIP to adopt its general conformity rules and EPA approves that SIP revision, any agreements, including mitigation measures, necessary for a conformity determination will be both State and federally enforceable. Enforceability through the applicable SIP will apply to all persons who agree to mitigate direct and indirect emissions associated with a Federal action for a conformity determination.

PART 94—CONTROL OF AIR POLLUTION FROM MARINE COMPRESSION-IGNITION ENGINES

Subpart A—General Provisions for Emission Regulations for Compression-Ignition Marine Engines

Sec.
94.1 Applicability.
94.2 Definitions.
94.3 Abbreviations.
94.4 Treatment of confidential information.
94.5 Reference materials.
94.6 Regulatory structure.
94.7 General standards and requirements.
94.8 Exhaust emission standards.
94.9 Compliance with emission standards.
94.10 Warranty period.
94.11 Requirements for rebuilding certified engines.
94.12 Interim provisions.

Subpart B—Test Procedures

94.101 Applicability.
94.102 General provisions.
94.103 Test procedures for Category 1 marine engines.
94.104 Test procedures for Category 2 marine engines.
94.105 Duty cycles.
94.106 Supplemental test procedures.
94.107 Determination of maximum test speed.
94.108 Test fuels.

Subpart C—Certification Provisions

94.201 Applicability.
94.202 Definitions.
94.203 Application for certification.
94.204 Designation of engine families.
94.205 Prohibited controls, adjustable parameters.
94.206 Required information.
94.207 Special test procedures.
94.208 Certification.
94.209 Special provisions for post-manufacture marinizers.
94.210 Amending the application and certificate of conformity.
94.211 Emission-related maintenance instructions for purchasers.
94.212 Labeling.
94.213 Submission of engine identification numbers.
94.214 Production engines.
94.215 Maintenance of records; submittal of information; right of entry.

94.216 Hearing procedures.
94.217 Emission data engine selection.
94.218 Deterioration factor determination.
94.219 Durability data engine selection.
94.220 Service accumulation.
94.221 Application of good engineering judgment.
94.222 Certification of engines on imported vessels.

Subpart D—Certification Averaging, Banking, and Trading Provisions

94.301 Applicability.
94.302 Definitions.
94.303 General provisions.
94.304 Compliance requirements.
94.305 Credit generation and use calculation.
94.306 Certification.
94.307 Labeling.
94.308 Maintenance of records.
94.309 Reports.
94.310 Notice of opportunity for hearing.

Subpart E—Emission-related Defect Reporting Requirements, Voluntary Emission Recall Program

94.401 Applicability.
94.402 Definitions.
94.403 Emission defect information report.
94.404 Voluntary emissions recall reporting.
94.405 Alternative report formats.
94.406 Reports filing: record retention.
94.407 Responsibility under other legal provisions preserved.
94.408 Disclaimer of production warranty applicability.

Subpart F—Manufacturer Production Line Testing Programs

94.501 Applicability.
94.502 Definitions.
94.503 General requirements.
94.504 Right of entry and access.
94.505 Sample selection for testing.
94.506 Test procedures.
94.507 Sequence of testing.
94.508 Calculation and reporting of test results.
94.509 Maintenance of records; submittal of information.
94.510 Compliance with criteria for production line testing.
94.511 [Reserved]
94.512 Suspension and revocation of certificates of conformity.
94.513 Request for public hearing.
94.514 Administrative procedures for public hearing.
94.515 Hearing procedures.
94.516 Appeal of hearing decision.
94.517 Treatment of confidential information.

Subpart G—[Reserved]

Subpart H—Recall Regulations

94.701 Applicability.
94.702 Definitions.
94.703 Applicability of 40 CFR Part 85, Subpart S.

Subpart I—Importation of Nonconforming Engines

94.801 Applicability.
94.802 Definitions.
94.803 Admission.
94.804 Exemptions.
94.805 Prohibited acts; penalties.

Subpart J—Exclusion and Exemption Provisions

94.901 Purpose and applicability.
94.902 Definitions.
94.903 Exclusions.
94.904 Exemptions.
94.905 Testing exemption.
94.906 Manufacturer-owned exemption, display exemption, competition exemption, and foreign trade vessel exemption.
94.907 Engine dressing exemption.
94.908 National security exemption.
94.909 Export exemptions.
94.910 Granting of exemptions.
94.911 Submission of exemption requests.

Subpart K—[Reserved]

Subpart L—General Enforcement Provisions and Prohibited Acts

94.1101 Applicability.
94.1102 Definitions.
94.1103 Prohibited acts.
94.1104 General enforcement provisions.
94.1105 Injunction proceedings for prohibited acts.
94.1106 Penalties.
94.1107 Warranty provisions.
94.1108 In-use compliance provisions.

APPENDIX I TO PART 94—EMISSION-RELATED ENGINE PARAMETERS AND SPECIFICATIONS.

AUTHORITY: 42 U.S.C. 7522, 7523, 7524, 7525, 7541, 7542, 7543, 7545, 7547, 7549, 7550 and 7601(a).

SOURCE: 64 FR 73331, Dec. 29, 1999, unless otherwise noted.

Subpart A—General Provisions for Emission Regulations for Compression-Ignition Marine Engines

§94.1 Applicability.

(a) Except as noted in paragraphs (b) and (c) of this section, the provisions of this part apply to manufacturers (including post-manufacture marinizers and dressers), rebuilders, owners and operators of:

(1) Marine engines that are compression-ignition engines manufactured (or that otherwise become new) on or after January 1, 2004;

(2) Marine vessels manufactured (or that otherwise become new) on or after January 1, 2004 and which include a compression-ignition marine engine.

(b) Notwithstanding the provision of paragraph (c) of this section, the requirements and prohibitions of this part do not apply with respect to the engines identified in paragraphs (a)(1) and (2) of this section where such engines are:

(1) Category 3 marine engines;

(2) Marine engines with rated power below 37 kW; or

(3) Marine engines on foreign vessels.

(c) The provisions of subpart L of this part apply to all persons with respect to the engines identified in paragraphs (a)(1) and (2) of this section.

(d) The provisions of this part do not apply to any persons with respect to the engines not identified in paragraphs (a)(1) and (2) of this section.

(e) The prohibition specified in §94.1103(a)(6) applies to all persons with respect to recreational marine engines. Notwithstanding the provision of paragraph (c) of this section, requirements or prohibitions other than the prohibition specified in §94.1103(a)(6) do not apply with respect to recreational marine engines.

§94.2 Definitions.

(a) The definitions of this section apply to this subpart. They also apply to all subparts of this part, except where noted otherwise.

(b) As used in this part, all terms not defined in this section shall have the meaning given them in the Act: *Act* means the Clean Air Act as amended (42 U.S.C. 7401 *et seq.*).

Adjustable Parameter means any device, system, or element of design which is physically or electronically capable of being adjusted (including those which are difficult to access) and which, if adjusted, may affect emissions or engine performance during emission testing.

Administrator means the Administrator of the Environmental Protection Agency or his/her authorized representative.

Aftertreatment system or *aftertreatment component* or *aftertreatment technology* means any system or component or technology mounted downstream of the exhaust valve or exhaust port whose design function is to reduce exhaust emissions.

Applicable standard means a standard to which an engine is subject; or, where an engine is certified to another standard or FEL, applicable standard means the other standard or FEL to which the engine is certified, as allowed by §94.8. This definition does not apply to subpart D of this part.

Auxiliary engine means a marine engine that is not a propulsion engine.

Auxiliary emission control device (AECD) means any element of design which senses temperature, vessel speed, engine RPM, atmospheric pressure, manifold pressure or vacuum, or any other parameter for the purpose of activating, modulating, delaying, or deactivating the operation of any part of the emission control system (including, but not limited to injection timing); or any other feature that causes in-use emissions to be higher than those measured under test conditions.

Averaging means the exchange of emission credits among engine families within a given manufacturer's product line.

Banking means the retention of emission credits by a credit holder for use in future calendar year averaging or trading as permitted by the regulations in this part.

Base engine means a land-based engine to be marinized, as configured prior to marinization.

Blue Sky Series engine means an engine meeting the requirements of §94.7(e).

Calibration means the set of specifications, including tolerances, specific to

a particular design, version, or application of a component, or components, or assembly capable of functionally describing its operation over its working range.

Category 1 means relating to a marine engine with a rated power greater than or equal to 37 kilowatts and a specific engine displacement less than 5.0 liters per cylinder.

Category 2 means relating to a marine engine with a specific engine displacement greater than or equal to 5.0 liters per cylinder but less than 30 liters per cylinder.

Category 3 means relating to a marine engine with a specific engine displacement greater than or equal to 30 liters per cylinder.

Commercial marine engine means a marine engine that is not a recreational marine engine.

Compliance date means the date on which compliance with a standard becomes mandatory. For example, the compliance date for standards which first apply to the 2004 model year, is January 1, 2004.

Compression-ignition means relating to a type of engine with operating characteristics significantly similar to the theoretical Diesel combustion cycle. The non-use of a throttle to regulate intake air flow for controlling power during normal operation is indicative of a compression-ignition engine.

Configuration means any subclassification of an engine family which can be described on the basis of gross power, emission control system, governed speed, injector size, engine calibration, and other parameters as designated by the Administrator.

Constant-speed engine means an engine that is governed to operate only at a single rated speed.

Crankcase emissions means airborne substances emitted to the atmosphere from any portion of the engine crankcase ventilation or engine lubrication system.

Defeat device means an AECD or other control feature that reduces the effectiveness of the emission control system under conditions which may reasonably be expected to be encountered in normal engine operation and use, unless the AECD or other control feature has been identified by the manufacturer in the application for certification, and:

(1) Such conditions are substantially represented by the portion of the applicable duty cycle of § 94.105 during which the applicable emission rates are measured;

(2) The need for the AECD or other control feature is justified in terms of protecting the engine or vessel against damage or accident; or

(3) The AECD or other control feature does not go beyond the requirements of engine starting.

Designated Officer means the person designated by the Director of the Office of Mobile Sources to act as the Designated Officer under the provisions of this part. For marine engines, the address for the Designated Officer is: Group Manager, Engine Compliance Group, U.S. EPA (mail code 6403J), 1200 Pennsylvania Ave., NW., Washington, DC 20460.

Deterioration factor means the difference between exhaust emissions at the end of useful life and exhaust emissions at the low hour test point expressed as either: the ratio of exhaust emissions at the end of useful life to exhaust emissions at the low hour test point (for multiplicative deterioration factors); or the difference between exhaust emissions at the end of useful life and exhaust emissions at the low hour test point (for additive deterioration factors).

Diesel fuel means any fuel suitable for use in diesel engines which is commonly or commercially known or sold as diesel fuel.

Dresser means any entity that modifies a land-based engine for use in a marine vessel, in compliance with the provisions of § 94.907. This means that dressers may not modify the engine in a way that would affect emissions.

Emission control system means those devices, systems or elements of design which control or reduce the emission of substances from an engine. This includes, but is not limited to, mechanical and electronic components and controls, and computer software.

Emission credits means the amount of emission reduction or exceedance, by an engine family, below or above the

emission standard, respectively, as calculated under subpart D of this part. Emission reductions below the standard are considered as ''positive credits,'' while emission exceedances above the standard are considered as ''negative credits.'' In addition, ''projected credits'' refer to emission credits based on the projected applicable production/sales volume of the engine family. ''Reserved credits'' are emission credits generated within a calendar year waiting to be reported to EPA at the end of the calendar year. ''Actual credits'' refer to emission credits based on actual applicable production/sales volume as contained in the end-of-year reports submitted to EPA.

Emission-data engine means an engine which is tested for purposes of emission certification or production line testing.

Emission-related defect means a defect in design, materials, or workmanship in a device, system, or assembly which affects any parameter or specification enumerated in Appendix I of this part.

Emission-related maintenance means that maintenance which substantially affects emissions or which is likely to affect the deterioration of the engine or vessel with respect to emissions.

Engine family means a group of engine configurations that are expected to have similar emission characteristics throughout the useful lives of the engines (see §94.204), and that are (or were) covered (or requested to be covered) by a specific certificate of conformity.

Engineering analysis means a summary of scientific and/or engineering principles and facts that support a conclusion made by a manufacturer, with respect to compliance with the provisions of this part.

EPA Enforcement Officer means any officer or employee of the Environmental Protection Agency so designated in writing by the Administrator or his/her designee.

Exhaust emissions means substances (i.e., gases and particles) emitted to the atmosphere from any opening downstream from the exhaust port or exhaust valve of an engine.

Exhaust gas recirculation means an emission control technology that reduces emissions by routing gases that had been exhausted from the combustion chamber(s) back into the engine to be mixed with incoming air prior to or during combustion. The use of valve timing to increase the amount of residual exhaust gas in the combustion chamber(s) that is mixed with incoming air prior to or during combustion is not considered to be exhaust gas recirculation for the purposes of this part.

Family Emission Limit (FEL) means an emission level declared by the certifying manufacturer to serve in lieu of an otherwise applicable emission standard for certification and compliance purposes in the averaging, banking and trading program. FELs are expressed to the same number of decimal places as the applicable emission standard.

Foreign vessel means a vessel of foreign registry or a vessel operated under the authority of a country other than the United States.

Fuel system means the combination of fuel tank(s), fuel pump(s), fuel lines and filters, pressure regulator(s), and fuel injection components, fuel system vents, and any other component involved in the delivery of fuel to the engine.

Green Engine Factor means a factor that is applied to emission measurements from an engine that has had little or no service accumulation. The Green Engine Factor adjusts emission measurements to be equivalent to emission measurements from an engine that has had approximately 300 hours of use.

Identification number means a specification (for example, model number/serial number combination) which allows a particular engine to be distinguished from other similar engines.

Importer means an entity or person who imports engines from a foreign country into the United States (including its territories).

Intermediate Speed means peak torque speed if peak torque speed occurs from 60 to 75 percent of maximum test speed. If peak torque speed is less than 60 percent of maximum test speed, intermediate speed means 60 percent of maximum test speed. If peak torque speed is greater than 75 percent of maximum test speed, intermediate speed means 75 percent of maximum test speed.

Low hour engine means an engine during the interval between the time that normal assembly operations and adjustments are completed and the time that 300 additional operating hours have been accumulated (including hours of operation accumulated during emission testing, if performed).

Malfunction means a condition in which the operation of a component in an engine occurs in a manner other than that specified by the certifying manufacturer (e.g., as specified in the application for certification); or the operation of an engine in that condition.

Manufacturer means any person engaged in the manufacturing or assembling of new engines or importing such engines for resale, or who acts for and is under the control of any such person in connection with the distribution of such engines. The term manufacturer includes post-manufacturer marinizers, but does not include any dealer with respect to new engines received by such person in commerce.

Manufacturer-owned engine means an uncertified marine engine that is owned and controlled by a manufacturer, is used for product development, and is not sold or leased.

Marine engine means an engine that is installed or intended to be installed on a marine vessel. This definition does not include portable auxiliary engines for which the fueling, cooling and exhaust systems are not integral parts of the vessel.

Marine vessel has the meaning specified in the General Provisions of the United States Code, 1 U.S.C. 3.

Maximum Test Power means:

(1) For Category 1 engines, the power output observed at the maximum test speed with the maximum fueling rate possible.

(2) For Category 2 engines, 90 percent of the power output observed at the maximum test speed with the maximum fueling rate possible.

Maximum Test Torque means the torque output observed at the test speed with the maximum fueling rate possible at that speed.

Method of aspiration means the method whereby air for fuel combustion enters the engine (e.g., naturally aspirated or turbocharged).

Model year means the manufacturer's annual new model production period which includes January 1 of the calendar year, ends no later than December 31 of the calendar year, and does not begin earlier than January 2 of the previous calendar year. Where a manufacturer has no annual new model production period, model year means calendar year.

New marine engine means:

(1)(i) A marine engine, the equitable or legal title to which has never been transferred to an ultimate purchaser;

(ii) A marine engine installed on a vessel, the equitable or legal title to such vessel has never been transferred to an ultimate purchaser; or

(iii) A marine engine that has not been placed into service on a vessel.

(2) Where the equitable or legal title to an engine or vessel is not transferred to an ultimate purchaser prior to its being placed into service, the engine ceases to be new after it is placed into service.

(3) With respect to imported engines, the term ''new marine engine'' means an engine that is not covered by a certificate of conformity under this part at the time of importation, and that was manufactured after the starting date of the emission standards in this part which are applicable to such engine (or which would be applicable to such engine had it been manufactured for importation into the United States).

New vessel means:

(1)(i) A vessel, the equitable or legal title to which has never been transferred to an ultimate purchaser; or

(ii) A vessel that has been modified such that the value of the modifications exceeds 50 percent of the value of the modified vessel.

(2) Where the equitable or legal title to a vessel is not transferred to an ultimate purchaser prior to its being placed into service, the vessel ceases to be new when it is placed into service.

Nonconforming marine engine means a marine engine which is not covered by a certificate of conformity prior to importation or being offered for importation (or for which such coverage has not been adequately demonstrated to EPA); or a marine engine which was originally covered by a certificate of

conformity, but which is not in a certified configuration, or otherwise does not comply with the conditions of that certificate of conformity.

NOTE: This definition does not include domestic marine engines which are not covered by a certificate of conformity prior to their introduction into U.S. commerce; such engines are considered to be ''noncomplying marine engines.''

Oxides of nitrogen means nitric oxide and nitrogen dioxide. Oxides of nitrogen are expressed quantitatively as if the nitric oxide were in the form of nitrogen dioxide (oxides of nitrogen are assumed to have a molecular weight equivalent to nitrogen dioxide).

Passenger has the meaning given by 46 U.S.C. 2101(21). This generally means that a passenger is a person that pays to be on the vessel.

Post-manufacture marinizer means an entity that produces a marine engine by modifying a non-marine engine, whether certified or uncertified, complete or partially complete, where such entity is not controlled by the manufacturer of the base engine or by an entity that also controls the manufacturer of the base engine. In addition, vessel manufacturers that substantially modify marine engines are post-manufacture marinizers. For the purpose of this definition, ''substantially modify'' means changing an engine in a way that could change engine emission characteristics.

Presentation of credentials means the display of the document designating a person as an EPA enforcement officer.

Primary fuel means that type of fuel (e.g., petroleum distillate diesel fuel) that is expected to be consumed in the greatest quantity (volume basis) when the engine is operated in use.

Propulsion engine means an engine that moves a vessel through the water or directs the movement of a vessel.

Recreational marine engine means a propulsion marine engine that is intended by the manufacturer to be installed on a recreational vessel, and which is permanently labeled as follows: ''THIS ENGINE IS CATEGORIZED AS A RECREATIONAL ENGINE UNDER 40 CFR PART 94, AND IS NOT SUBJECT TO THE EMISSION STANDARDS OF THAT PART. INSTALLATION OF THIS ENGINE IN ANY NONRECREATIONAL VESSEL IS A VIOLATION OF FEDERAL LAW SUBJECT TO CIVIL PENALTY.''

Recreational vessel means a vessel that is intended by the vessel manufacturer to be operated primarily for pleasure or leased, rented or chartered to another for the latter's pleasure. For this definition, the term ''operated primarily for pleasure or leased, rented or chartered to another for the latter's pleasure'' does not include the following vessels:

(1) Vessels of less than 100 gross tons that carry more than 6 passengers (as defined in this section).

(2) Vessels of 100 gross tons or more that carry one or more passengers (as defined in this section).

(3) Vessels used solely for competition.

Service life means the total life of an engine. Service life begins when the engine is originally manufactured and continues until the engine is permanently removed from service.

Specific emissions means emissions expressed on the basis of observed brake power, using units of g/kW-hr. Observed brake power measurement includes accessories on the engine if these accessories are required for running an emission test (except for the cooling fan). When it is not possible to test the engine in the gross conditions, for example if the engine and transmission form a single integral unit, the engine may be tested in the net condition. Power corrections from net to gross conditions will be allowed with prior approval of the Administrator.

Specified by a certificate of conformity or *specified in a certificate of conformity* means stated or otherwise specified in a certificate of conformity or an approved application for certification.

Test engine means an engine in a test sample.

Test sample means the collection of engines or vessels selected from the population of an engine family for emission testing.

Tier 2 means relating to an engine subject to the Tier 2 emission standards listed in §94.8.

Total Hydrocarbon Equivalent means the sum of the carbon mass contributions of non-oxygenated hydrocarbons,

alcohols and aldehydes, or other organic compounds that are measured separately as contained in a gas sample, expressed as petroleum-fueled engine hydrocarbons. The hydrogen-to-carbon ratio of the equivalent hydrocarbon is 1.85:1.

Trading means the exchange of engine emission credits between credit holders.

Ultimate Purchaser means, with respect to any new engine or vessel, the first person who in good faith purchases such new engine or vessel for purposes other than resale.

United States. United States includes the customs territory of the United States as defined in 19 U.S.C. 1202, and the Virgin Islands, Guam, American Samoa, and the Commonwealth of the Northern Mariana Islands.

U.S.-directed production volume means the number of marine engine units, subject to this part, produced by a manufacturer for which the manufacturer has reasonable assurance that sale was or will be made to ultimate purchasers in the United States.

Useful life means the period during which an engine is designed to properly function in terms of reliability and fuel consumption, without being remanufactured, specified as hours of operation and years. It is the period during which a new engine is required to comply with all applicable emission standards. (Note: § 94.9(a) specifies minimum requirements for useful life values.)

Vessel means a marine vessel.

Voluntary emission recall means a repair, adjustment, or modification program voluntarily initiated and conducted by a manufacturer to remedy any emission-related defect for which notification of engine or vessel owners has been provided.

§ 94.3 Abbreviations.

The abbreviations of this section apply to all subparts of this part and have the following meanings:

AECD—Auxiliary emission control device.
API—American Petroleum Institute.
ASTM—American Society for Testing and Materials.
°C—Degrees Celsius.
CI—Compression ignition.
CO—Carbon monoxide.
CO_2—Carbon dioxide.
disp.—volumetric displacement of an engine cylinder.
EGR—Exhaust gas recirculation.
EP—End point.
EPA—Environmental Protection Agency.
FEL—Family emission limit.
ft—foot or feet.
FTP—Federal Test Procedure.
g—gram(s).
g/kW-hr—Grams per kilowatt hour.
gal—U.S. gallon.
h—hour(s).
HC—hydrocarbon.
Hg—Mercury.
hp—horsepower.
ICI—Independent Commercial Importer.
in—inch(es).
K—Kelvin.
kg—kilogram(s).
km—kilometer(s).
kPa—kilopascal(s).
kW—kilowatt.
L/cyl—liters per cylinder.
m—meter(s).
max—maximum.
mg—milligram(s).
min—minute.
ml—milliliter(s).
mm—millimeter.
NIST—National Institute for Standards and Testing.
NMHC—Non-methane hydrocarbons.
NTIS—National Technical Information Service.
NO—nitric oxide.
NO_2—nitrogen dioxide.
NO_X—oxides of nitrogen.
No.—number.
O_2—oxygen.
pct—percent.
PM—particulate matter.
PMM—post-manufacture marinizer.
ppm—parts per million by volume.
ppmC—parts per million, carbon.
rpm—revolutions per minute.
s—second(s).
SAE—Society of Automotive Engineers.
SEA—Selective Enforcement Auditing.
SI—International system of units (i.e., metric).
THC—Total hydrocarbon.
THCE—Total hydrocarbon equivalent.
U.S.—United States.
U.S.C.—United States Code.
vs—versus.
W—watt(s).
wt—weight.

§ 94.4 Treatment of confidential information.

(a) Any manufacturer may assert that some or all of the information submitted pursuant to this part is entitled to confidential treatment as provided by 40 CFR part 2, subpart B.

(b) Any claim of confidentiality must accompany the information at the time it is submitted to EPA.

(c) To assert that information submitted pursuant to this part is confidential, a person or manufacturer must indicate clearly the items of information claimed confidential by marking, circling, bracketing, stamping, or otherwise specifying the confidential information. Furthermore, EPA requests, but does not require, that the submitter also provide a second copy of its submittal from which all confidential information has been deleted. If a need arises to publicly release nonconfidential information, EPA will assume that the submitter has accurately deleted the confidential information from this second copy.

(d) If a claim is made that some or all of the information submitted pursuant to this part is entitled to confidential treatment, the information covered by that confidentiality claim will be disclosed by EPA only to the extent and by means of the procedures set forth in 40 CFR part 2, subpart B.

(e) Information provided without a claim of confidentiality at the time of submission may be made available to the public by EPA without further notice to the submitter, in accordance with 40 CFR 2.204(c)(2)(i)(A).

§94.5 Reference materials.

(a) The documents in paragraph (b) of this section have been incorporated by reference. The incorporation by reference was approved by the Director of the Federal Register in accordance with 5 U.S.C. 552(a) and 1 CFR part 51. Copies may be inspected at U.S. EPA, OAR, 1200 Pennsylvania Ave., NW., Washington, DC 20460, or at the Office of the Federal Register, 800 North Capitol Street, NW., suite 700, Washington, DC.

(b) The following paragraphs and tables set forth the material that has been incorporated by reference in this part:

(1) *ASTM material.* The following table sets forth material from the American Society for Testing and Materials that has been incorporated by reference. The first column lists the number and name of the material. The second column lists the section(s) of the part, other than this section, in which the matter is referenced. The second column is presented for information only and may not be all-inclusive. More recent versions of these standards may be used with advance approval of the Administrator. Copies of these materials may be obtained from American Society for Testing and Materials, 100 Barr Harbor Dr., West Conshohocken, PA 19428. The table follows:

Document number and name	40 CFR part 94 reference
ASTM D 86–97: ''Standard Test Method for Distillation of Petroleum Products at Atmospheric Pressure''.	§94.108 to Subpart D.
ASTM D 93–97: ''Standard Test Methods for Flash-Point by Pensky-Martens Closed Cup Tester''.	§94.108 to Subpart D.
ASTM D 129–95: ''Standard Test Method for Sulfur in Petroleum Products (General Bomb Method)''.	§94.108 to Subpart D.
ASTM D 287–92: ''Standard Test Method for API Gravity of Crude Petroleum and Petroleum Products'' (Hydrometer Method).	§94.108 to Subpart D.
ASTM D 445–97: ''Standard Test Method for Kinematic Viscosity of Transparent and Opaque Liquids (and the Calculation of Dynamic Viscosity)''.	§94.108 to Subpart D.
ASTM D 613–95: ''Standard Test Method for Cetane Number of Diesel Fuel Oil''.	§94.108 to Subpart D.
ASTM D 1319–98: ''Standard Test Method for Hydrocarbon Types in Liquid Petroleum Products by Fluorescent Indicator Adsorption''.	§94.108 to Subpart D.
ASTM D 2622–98: ''Standard Test Method for Sulfur in Petroleum Products by Wavelength Dispersive X-ray Fluorescence Spectrometry''.	§94.108 to Subpart D.
ASTM D 5186–96: ''Standard Test Method for ''Determination of the Aromatic Content and Polynuclear Aromatic Content of Diesel Fuels and Aviation Turbine Fuels By Supercritical Fluid Chromatography''.	§94.108 to Subpart D.

Document number and name	40 CFR part 94 reference
ASTM E 29–93a: ''Standard Practice for Using Significant Digits in Test Data to Determine Conformance with Specifications''.	§§ 94.9, 94.218, 94.305, 94.508.

(2) [Reserved]

§ 94.6 Regulatory structure.

This section provides an overview of the regulatory structure of this part.

(a) The regulations of this Part 94 are intended to control emissions from in-use marine engines.

(b) The engines for which the regulations of this part (i.e., 40 CFR part 94) apply are specified by § 94.1, and by the definitions of § 94.2. The point at which an engine or vessel becomes subject to the regulations of this part is determined by the definitions of new marine engine and new marine vessel in § 94.2. Subpart J of this part contains provisions exempting certain engines and vessels from the emission standards in this part under special circumstances.

(c) To comply with the requirements of this part, a manufacturer must demonstrate to EPA that the engine meets the applicable standards of §§ 94.7 and 94.8, and all other requirements of this part. The requirements of this certification process are described in subparts C and D of this part.

(d) Subpart B of this part specifies procedures and equipment to be used for conducting emission tests for the purpose of the regulations of this part.

(e) Subparts E, F, and H of this part specify requirements for manufacturers after certification; that is during production and use of the engines.

(f) Subpart I of this part contains requirements applicable to the importation of marine engines covered by the provisions of this part.

(g) Subpart L of this part describes prohibited acts and contains other enforcement provisions relating to marine engines and vessels covered by the provisions of this part.

(h) Unless specified otherwise, the provisions of this part apply to all marine engines and vessels subject to the emission standards of this part.

§ 94.7 General standards and requirements.

(a) Marine engines and vessels may not be equipped with a defeat device.

(b) An engine may not be equipped with an emission control system for the purpose of complying with emission standards if such a system will cause or contribute to an unreasonable risk to public health, welfare, or safety in its operation or function.

(c) An engine with an emission control system may not emit any noxious or toxic substance which would not be emitted in the operation of the engine in the absence of such a system, except as specifically permitted by regulation.

(d) All engines subject to the emission standards of this part shall be equipped with a connection in the engine exhaust system that is located downstream of the engine and before any point at which the exhaust contacts water (or any other cooling/scrubbing medium) for the temporary attachment of gaseous and/or particulate emission sampling equipment. This connection shall be internally threaded with standard pipe threads of a size not larger than one-half inch, and shall be closed by a pipe-plug when not in use. (Equivalent connections are allowed.)

(e) Electronically controlled engines subject to the emission standards of this part shall broadcast on engine's controller area networks engine torque (as percent of maximum) and engine speed.

§ 94.8 Exhaust emission standards.

(a) Exhaust emissions from marine compression-ignition engines shall not exceed the applicable exhaust emission standards contained in Table A–1 as follows:

TABLE A–1—PRIMARY TIER 2 EXHAUST EMISSION STANDARDS (G/KW-HR)

Engine size—liters/cylinder, rated power	Category	Model Year [1]	THC+NO_X g//kW-hr	CO g/kW-hr	PM g/kW-hr
Disp. <0.9 and power ≥ 37 kW	Category 1	2005	7.5	5.0	0.40
0.9 ≤disp. <1.2 all power levels	Category 1	2004	7.2	5.0	0.30
1.2 ≤disp. <2.5 all power levels	Category 1	2004	7.2	5.0	0.20
2.5 ≤disp. <5.0 all power levels	Category 1	2007	7.2	5.0	0.20
5.0 ≤disp. <15.0 all power levels	Category 2	2007	7.8	5.0	0.27
15.0 ≤disp. <20.0 power < 3300 kW	Category 2	2007	8.7	5.0	0.50
15.0 ≤disp. <20.0 power ≥ 3300 kW	Category 2	2007	9.8	5.0	0.50
20.0 ≤disp. <25.0 all power levels	Category 2	2007	9.8	5.0	0.50
25.0 ≤disp. <30.0 all power levels	Category 2	2007	11.0	5.0	0.50

[1] The model years listed indicate the model years for which the specified standards start.

(b) Exhaust emissions of oxides of nitrogen, carbon monoxide, hydrocarbon, and particulate matter (and other compounds, as applicable) shall be measured using the procedures set forth in subpart B of this part.

(c) In lieu of the THC+NO_X standards, and PM standards specified in paragraph (a) of this section, manufacturers may elect to include engine families in the averaging, banking, and trading program, the provisions of which are specified in subpart D of this part. The manufacturer shall then set a family emission limit (FEL) which will serve as the standard for that engine family.

(d)(1) Naturally aspirated engines subject to the standards of this section shall not discharge crankcase emissions into the ambient atmosphere.

(2) For engines using turbochargers, pumps, blowers, or superchargers for air induction, if the engine discharges crankcase emissions into the ambient atmosphere in use, these crankcase emissions shall be included in all exhaust emission measurements.

(e) Exhaust emissions from propulsion engines subject to the standards (or FELs) in paragraph (a), (c), or (f) of this section shall not exceed:

(1) 1.20 times the applicable standards (or FELs) when tested in accordance with the supplemental test procedures specified in §94.106 at loads greater than or equal to 45 percent of the maximum power at rated speed or 1.50 times the applicable standards (or FELs) at loads less than 45 percent of the maximum power at rated speed; or

(2) 1.25 times the applicable standards (or FELs) when tested over the whole power range in accordance with the supplemental test procedures specified in §94.106.

(f) The following paragraphs define the requirements for low-emitting Blue Sky Series engines.

(1) *Voluntary standards.* Engines may be designated ''Blue Sky Series'' engines through the 2010 model year by meeting the voluntary standards listed in Table A–2, which apply to all certification and in-use testing, as follows:

TABLE A–2—VOLUNTARY EMISSION STANDARDS (G/KW-HR)

Rated Brake Power (kW)	THC+NO_X	PM
Power ≥37 kW, and displ.<0.9	4.0	0.24
0.9≤displ.<1.2	4.0	0.18
1.2≤displ.<2.5	4.0	0.12
2.5≤displ.<5	5.0	0.12
5≤displ.<15	5.0	0.16
15 ≤disp. <20, and power <3300 kW	5.2	0.30
15 ≤disp. <20, and power ≥3300 kW	5.9	0.30
20 ≤disp. <25	5.9	0.30
25 ≤disp. <30	6.6	0.30

(2) *Additional standards.* Blue Sky Series engines are subject to all provisions that would otherwise apply under this part.

(3) *Test procedures.* Manufacturers may use an alternate procedure to demonstrate the desired level of emission control if approved in advance by the Administrator.

(g) Standards for alternative fuels. The standards described in this section apply to compression-ignition engines, irrespective of fuel, with the following two exceptions:

(1) Engines fueled with natural gas shall comply with NMHC+NO_X standards that are numerically equivalent to the THC+NO_X described in paragraph (a) of this section; and

(2) Engines fueled with alcohol fuel shall comply with THCE+NO_X standards that are numerically equivalent to the THC+NO_X described in paragraph (a) of this section.

§ 94.9 Compliance with emission standards.

(a) The general standards and requirements in § 94.7 and the emission standards in § 94.8 apply to each new engine throughout its useful life period. The useful life is specified both in years and in hours of operation, and ends when either of the values (hours of operation or years) is exceeded.

(1) The minimum useful life is 10 years or 10,000 hours of operation for Category 1 and 10 years or 20,000 hours of operation for Category 2.

(2) The manufacturer shall specify a longer useful life if the engine is designed to remain in service longer than the applicable minimum useful life without being rebuilt. A manufacturer's recommended time to remanufacture/rebuild longer than the minimum useful life is one indicator of a longer design life.

(3) Upon request by the manufacturer, the Administrator may allow useful life values shorter than the minimum values specified in paragraph (a)(1) of this section, provided:

(i) The useful life value may not be shorter than any of the following:

(A) 1000 hours of operation.

(B) The manufacturer's recommended overhaul interval.

(C) The mechanical warranty provided by the manufacturer to the owner.

(ii) The manufacturer must have documentation from in-use engines showing that these engines will rarely operate longer than the alternate useful life.

(iii) The manufacturer displays the useful life on the engine label.

(b) Certification is the process by which manufacturers apply for and obtain certificates of conformity from EPA, which allows the manufacturer to introduce into commerce new marine engines for sale or use in the U.S.

(1) Compliance with the applicable emission standards by an engine family shall be demonstrated by the certifying manufacturer before a certificate of conformity may be issued under § 94.208. Manufacturers shall demonstrate compliance using emission data, measured using the procedures specified in Subpart B of this part, from a low hour engine. A development engine that is equivalent in design to the marine engines being certified may be used for Category 2 certification.

(2) The emission values to compare with the standards shall be the emission values of a low hour engine, or a development engine, adjusted by the deterioration factors developed in accordance with the provisions of § 94.219. Before any emission value is compared with the standard, it shall be rounded, in accordance with ASTM E 29–93a (incorporated by reference at § 94.5), to the same number of significant figures as contained in the applicable standard.

(c) Upon request by the manufacturer, the Administrator may limit the applicability of exhaust emission requirements of § 94.8(e) as necessary for safety or to otherwise protect the engine.

§ 94.10 Warranty period.

(a) Warranties imposed by § 94.1107 shall apply for a period of operating hours equal to at least 50 percent of the useful life in operating hours or a period of years equal to at least 50 percent of the useful life in years, whichever comes first.

(b) Warranties imposed by § 94.1107 shall apply for a period not less than any mechanical warranties provided by the manufacturer to the owner.

§ 94.11 Requirements for rebuilding certified engines.

(a) The provisions of this section apply with respect to engines subject to the standards prescribed in § 94.8 and are applicable to the process of engine rebuilding. Engine rebuilding means to overhaul an engine or to otherwise perform extensive service on the engine (or on a portion of the engine or engine system). For the purpose of this definition, perform extensive service means to disassemble the engine (or portion of the engine or engine system), inspect and/or replace many of the parts, and reassemble the engine (or portion of the engine or engine system) in such a

manner that significantly increases the service life of the resultant engine.

(b) When rebuilding an engine, portions of an engine, or an engine system, there must be a reasonable technical basis for knowing that the resultant engine is equivalent, from an emissions standpoint, to a certified configuration (i.e., tolerances, calibrations, specifications), and the model year(s) of the resulting engine configuration must be identified. A reasonable basis would exist if:

(1) Parts installed, whether the parts are new, used, or rebuilt, are such that a person familiar with the design and function of motor vehicle engines would reasonably believe that the parts perform the same function with respect to emission control as the original parts; and

(2) Any parameter adjustment or design element change is made only:

(i) In accordance with the original engine manufacturer's instructions; or

(ii) Where data or other reasonable technical basis exists that such parameter adjustment or design element change, when performed on the engine or similar engines, is not expected to adversely affect in-use emissions.

(c) When an engine is being rebuilt and remains installed or is reinstalled in the same vessel, it must be rebuilt to a configuration of the same or later model year as the original engine. When an engine is being replaced, the replacement engine must be an engine of (or rebuilt to) a certified configuration that is equivalent, from an emissions standpoint, to the engine being replaced.

(d) At time of rebuild, emission-related codes or signals from on-board monitoring systems may not be erased or reset without diagnosing and responding appropriately to the diagnostic codes, regardless of whether the systems are installed to satisfy requirements in §94.211 or for other reasons and regardless of form or interface. Diagnostic systems must be free of all such codes when the rebuilt engine is returned to service. Such signals may not be rendered inoperative during the rebuilding process.

(e)(1) When conducting a rebuild, all critical emission-related components listed in Appendix I of this part not otherwise addressed by paragraphs (b) through (d) of this section must be checked and cleaned, adjusted, repaired, or replaced as necessary, following manufacturer recommended practices.

(2) During the installation of a rebuilt engine, all critical emission-related components listed in Appendix I of this part not otherwise addressed by paragraphs (b) through (d) of this section must be checked as necessary, following manufacturer recommended practices.

(f) Records shall be kept by parties conducting activities included in paragraphs (b) through (e) of this section. At minimum the records shall include the hours of operation at the time of rebuild, a listing of work performed on the engine and emission-related control components (including a listing of parts and components used, engine parameter adjustments, emission-related codes or signals responded to and reset), and work performed under paragraph (e) of this section.

(1) Parties may keep records in whatever format or system they choose as long as the records are understandable to an EPA enforcement officer or can be otherwise provided to an EPA enforcement officer in an understandable format when requested.

(2) Parties are not required to keep records of information that is not reasonably available through normal business practices including information on activities not conducted by themselves or information that they cannot reasonably access.

(3) Parties may keep records of their rebuilding practices for an engine family rather than on each individual engine rebuilt in cases where those rebuild practices are followed routinely.

(4) Records must be kept for a minimum of two years after the engine is rebuilt.

§94.12 Interim provisions.

This section contains provisions that apply for a limited number of calendar years or model years. These provisions apply instead of other provisions of this part.

(a) *Compliance date of standards.* Post-manufacture marinizers may elect to delay the model year of the Tier 2

standards as specified in § 94.8 by one year for each engine family. Compliance with the standards becomes mandatory after that year. Post-manufacture marinizers wishing to take advantage of this provision must inform the Designated Officer of their intent to do so in writing before the date that compliance with the standards would otherwise be mandatory.

(b) *Early banking of emission credits.* (1) A manufacturer may optionally certify engines manufactured before the date the Tier 2 standards take effect to earn emission credits under the averaging, banking, and trading program. Such optionally certified engines are subject to all provisions relating to mandatory certification and enforcement described in this part. Manufacturers may begin earning credits on January 28, 2000.

(2) Consistent with the provisions of Subpart D of this part, NO_X and PM emission credits may be generated from engines prior to the applicable effective compliance date of the applicable standard (i.e., the effective compliance date in § 94.8(a), as applicable), relative to baseline emission rates.

(3)(i) THC+NO_X credits generated under this paragraph (b) shall be calculated as specified in § 92.305, except that the baseline emission rate may be either the applicable standard or a measured THC+NO_X baseline level for the configuration with the lowest NO_X emission rate in the applicable engine family. The additional credits resulting from using a measured baseline (instead of the applicable standard) shall be discounted by 10 percent. This discount does not apply to the portion of the credits resulting from the engine's emissions being below the applicable standard. Baseline emission rates may not exceed the IMO NO_X limits.

(ii) PM credits generated under this paragraph (b) shall be calculated as specified in § 94.305, except that the applicable standard may be replaced by a measured PM baseline emission rate for the configuration with the lowest NO_X emission rate in the applicable engine family that is approved in advance by the Administrator. The additional credits resulting from using a measured baseline (instead of the applicable standard) shall be discounted by 10 percent. This discount does not apply to the portion of the credits resulting from the engine's emissions being below the applicable standard.

(4)(i) For post-manufacture marinizers, measured baseline emission levels may be based on emissions from a single engine for each engine family.

(ii) For all other manufacturers, measured baseline emission levels must be based on the average of emissions from at least three engines for each engine family.

(iii) The Administrator must approve any measured baselines in advance.

(5) For an engine to be eligible to generate early credits under this paragraph (b), its certified emission levels for all pollutants must be below the Tier 2 standards listed in § 94.8, with the following exception: PMMs may include in this early credit program Category 1 marine engines with certified emissions above the Tier 2 standards listed in § 94.8. Early credits generated by Category 1 marine engines with certified emissions above the Tier 2 standards listed in § 94.8 may not be used for model year 2008 or later engines.

(c) Testing of Category 1 engines subject to the requirements of this part that is conducted by the Administrator shall be performed using test fuels that meet the specifications in § 94.108 and have a sulfur content no higher than 0.20 weight percent, unless the PM emission rates are corrected for the effect of a higher fuel sulfur content.

(d) Post-manufacture marinizers may import an uncertified engine for marinization, in cases where the engine in the final marinized configuration is not subject to the standards of this part because:

(1) The model year of the marinized engine is prior to the first model year for which engines of that size are subject to the standards;

(2) The post-manufacture marinizer is marinizing the engine under paragraph (a) of this section; or

(3) The post-manufacture marinizer is granted hardship relief from the Tier 2 standards under § 94.209(c).

(e) Notwithstanding the other provisions of this part, the requirements of § 94.8(e) start with 2010 model year engines for post-manufacture marinizers

and 2007 model year engines for all other engine manufacturers.

Subpart B—Test Procedures

§ 94.101 Applicability.

Provisions of this subpart apply for testing performed by the Administrator or a manufacturer.

§ 94.102 General provisions.

(a) The test procedures specified in this part are intended to produce emission measurements that are equivalent to emission measurements that would result from emission tests performed during in-use operation using the same engine configuration installed in a vessel.

(b) Test procedures otherwise allowed by the provisions of this subpart shall not be used where such procedures are not consistent with good engineering practice and the regulatory goal specified in paragraph (a) of this section.

(c) Alternate test procedures may be used if shown to yield equivalent results, and if approved in advance by the Administrator.

§ 94.103 Test procedures for Category 1 marine engines.

(a) Gaseous and particulate emissions shall be measured using the test procedures specified in 40 CFR part 89, except as otherwise specified in this subpart.

(b) The Administrator may specify changes to the provisions of paragraph (a) of this section that are necessary to comply with the general provisions of § 94.102.

§ 94.104 Test procedures for Category 2 marine engines.

(a) Gaseous and particulate emissions shall be measured using the test procedures specified in 40 CFR part 92, except as otherwise specified in this subpart.

(b)(1) The requirements of 40 CFR part 92 related to charge air temperatures, engine speed and load, and engine air inlet restriction pressures do not apply for marine engines.

(2) For marine engine testing, charge air temperatures, engine speed and load, and engine air inlet restriction pressures shall be representative of typical in-use marine engine conditions.

(c) The Administrator may specify changes to the provisions of paragraph (a) of this section that are necessary to comply with the general provisions of § 94.102.

§ 94.105 Duty cycles.

(a) *Overview*. For the purpose of determining compliance with the emission standards of § 94.8, except for those in § 94.8(e), engines shall be tested using the appropriate duty cycles described in this section.

(b) *General cycle*. Propulsion engines that are used with (or intended to be used with) fixed-pitch propellers, and any other engines for the other duty cycles of this section don't apply, shall be tested using the duty cycle described in the following Table B–1:

TABLE B–1—GENERAL MARINE DUTY CYCLE

Mode No.	Engine speed [1] (percent of maximum test speed)	Percent of maximum test power [2]	Minimum time in mode (minutes)	Weighting factors
1	100	100	5.0	0.20
2	91	75	5.0	0.50
3	80	50	5.0	0.15
4	63	25	5.0	0.15

[1] Engine speed: #2 percent of point.
[2] Power: #2 percent of engine maximum value.

(c) *Variable-pitch and electrically coupled propellers*. (1) Constant-speed propulsion engines that are used with (or intended to be used with) variable-pitch propellers or with electrically coupled propellers shall be tested using the duty cycle described in the following Table B–2:

TABLE B–2—DUTY CYCLE FOR CONSTANT-SPEED PROPULSION ENGINES

Mode No.	Engine speed [1] (percent of maximum test speed)	Percent of maximum test power [2]	Minimum time in mode (minutes)	Weighting factors
1	100	100	5.0	0.20
2	100	75	5.0	0.50
3	100	50	5.0	0.15
4	100	25	5.0	0.15

[1] Engine speed: #2 percent of point.
[2] Power: #2 percent of engine maximum value.

(2) For the purpose of determining compliance with the emission standards of § 94.8, variable-speed propulsion engines that are used with (or intended to be used with) variable-pitch propellers or with electrically coupled propellers shall be tested using the duty cycle described in Table B–3, which follows:

TABLE B–3—DUTY CYCLE FOR VARIABLE SPEED PROPULSION ENGINES USED ON NON-PROPELLER LAW VESSELS AND FOR VARIABLE SPEED AUXILIARY ENGINES

Test segment	Mode No.	Engine speed [1]	Percent of maximum test torque [2]	Minimum time in mode (minutes)	Weighting factors
1	1	Maximum Test Speed	100	5.0	0.15
1	2	Maximum Test Speed	75	5.0	0.15
1	3	Maximum Test Speed	50	5.0	0.15
1	4	Maximum Test Speed	10	5.0	0.10
2	5	Intermediate	100	5.0	0.10
2	6	Intermediate	75	5.0	0.10
2	7	Intermediate	50	5.0	0.10
2	8	Idle	0	5.0	0.15

[1] Engine speed (non-idle): #2 percent of point. Engine speed (idle): Within manufacturer's specifications. Idle speed is specified by the manufacturer.
[2] Torque (non-idle): #2 percent of engine maximum value. Torque (idle): minimum fueling rate Load less than 5 percent of peak torque.

(d) *Auxiliary*. For the purpose of determining compliance with the emission standards of § 94.8:

(1) Constant speed auxiliary engines shall be tested using the duty cycle described in Table B–4, which follows:

TABLE B–4—DUTY CYCLE FOR CONSTANT-SPEED AUXILIARY ENGINES

Mode No.	Engine speed [1]	Percent of maximum test torque [2]	Minimum time in mode (minutes)	Weighting factors
1	Maximum Test Speed	100	5.0	0.05
2	Maximum Test Speed	75	5.0	0.25
3	Maximum Test Speed	50	5.0	0.30
4	Maximum Test Speed	25	5.0	0.30
5	Maximum Test Speed	10	5.0	0.10

[1] Engine speed: #2 percent of point.
[2] Torque: #2 percent of engine maximum value.

(2) Variable speed auxiliary engines shall be tested using the duty cycle described in Table B–3 in paragraph (c)(2) of this section.

§ 94.106 Supplemental test procedures.

This section describes the test procedures for supplemental testing conducted to determine compliance with the exhaust emission requirements of § 94.8(e). In general, the supplemental

test procedures are the same as those otherwise specified by this subpart, except that they cover any speeds, loads, ambient conditions, and operating parameters that may be experienced in use. The test procedures specified by other sections in this subpart also apply to these tests, except as specified in this section.

(a) Notwithstanding other provisions of this subpart, testing conducted to determine compliance with the exhaust emission requirements of §94.8(e) may be conducted:

(1) At any speed and load (or any combination of speeds and loads that is nominally steady-state) within the applicable Not To Exceed Zone specified in paragraph (b) of this section;

(2)(i) Without correction, at any intake air temperature between 13°C and 35°C (or between 13°C and 30°C for engines not drawing intake air directly from a space that could be heated by the engine);

(ii) Without correction at any ambient water temperature (or equivalent) between 5°C and 27°C;

(iii) Without correction at any ambient humidity between 7.1 and 10.7 grams of moisture per kilogram of dry air; and

(3) With a continuous sampling period not less than 30 seconds in duration.

(b) The specified Not to Exceed Zones for marine engines are defined as follows. These Not to Exceed Zones apply, unless a modified zone is established under paragraph (c) of this section.

(1) For Category 1 engines certified using the duty cycle specified in §94.105(a), the Not to Exceed zones are defined as follows:

(i) The Not to Exceed zone is the region between the curves power = $1.15 \times SPD^2$ and power = $0.85 \times SPD^4$, excluding all operation below 25% of maximum power at rated speed and excluding all operation below 63% of maximum test speed.

(ii) This zone is divided into two subzones, one above and one below 45% of maximum power at rated speed.

(iii) SPD in paragraph (b)(1)(i) of this section refers to percent of maximum test speed.

(iv) See Figure B–1 for an illustration of this Not to Exceed zone which follows:

Figure B-1

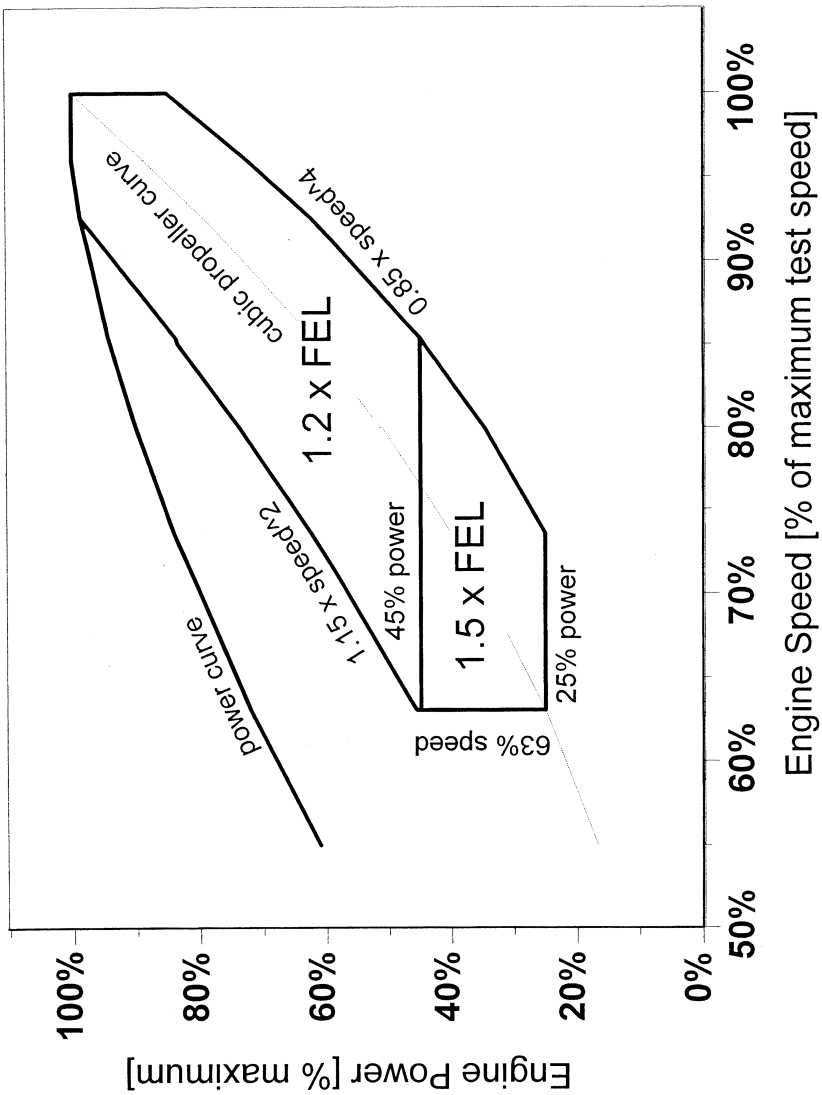

(2) For Category 2 engines certified using the duty cycle specified in § 94.105(a), the Not to Exceed zones are defined as follows:

(i) The Not to Exceed zone is the region between the curves power = 1.04 × SPD^2 and power = 0.76 × SPD^4, excluding all operation below 25% of maximum power at rated speed and excluding all operation below 63% of maximum test speed.

(ii) This zone is divided into two subzones, one above and one below 45% of maximum power at rated speed.

(iii) SPD in paragraph (b)(2)(i) of this section refers to percent of maximum test speed.

(iv) See Figure B–2 in paragraph (b)(3) of this section for an illustration of this Not to Exceed zone.

(3) For engines certified using the duty cycle specified in § 94.105(b)(2), the Not to Exceed zones are defined as follows:

Figure B-2

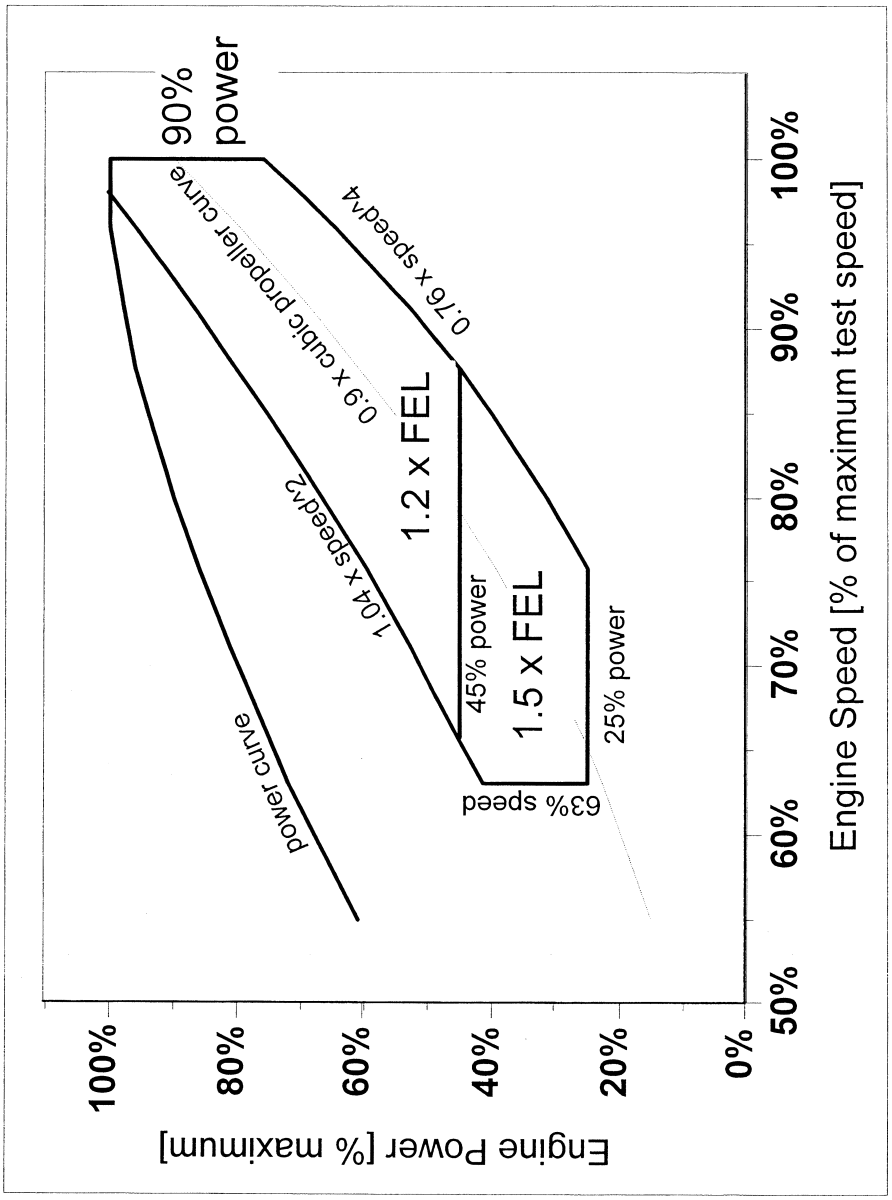

(i) The Not to Exceed zone is the region above the curve power = 0.85 × SPD^2, excluding all operation below 25% of maximum power at rated speed and excluding all operation below 63% of maximum test speed.

(ii) This zone is divided into two subzones, one above and one below 45% of maximum power at rated speed.

(iii) SPD in paragraph (b)(3)(i) of this section refers to percent of maximum test speed.

(iv) See Figure B–3 for an illustration of this Not to Exceed zone:

Figure B-3

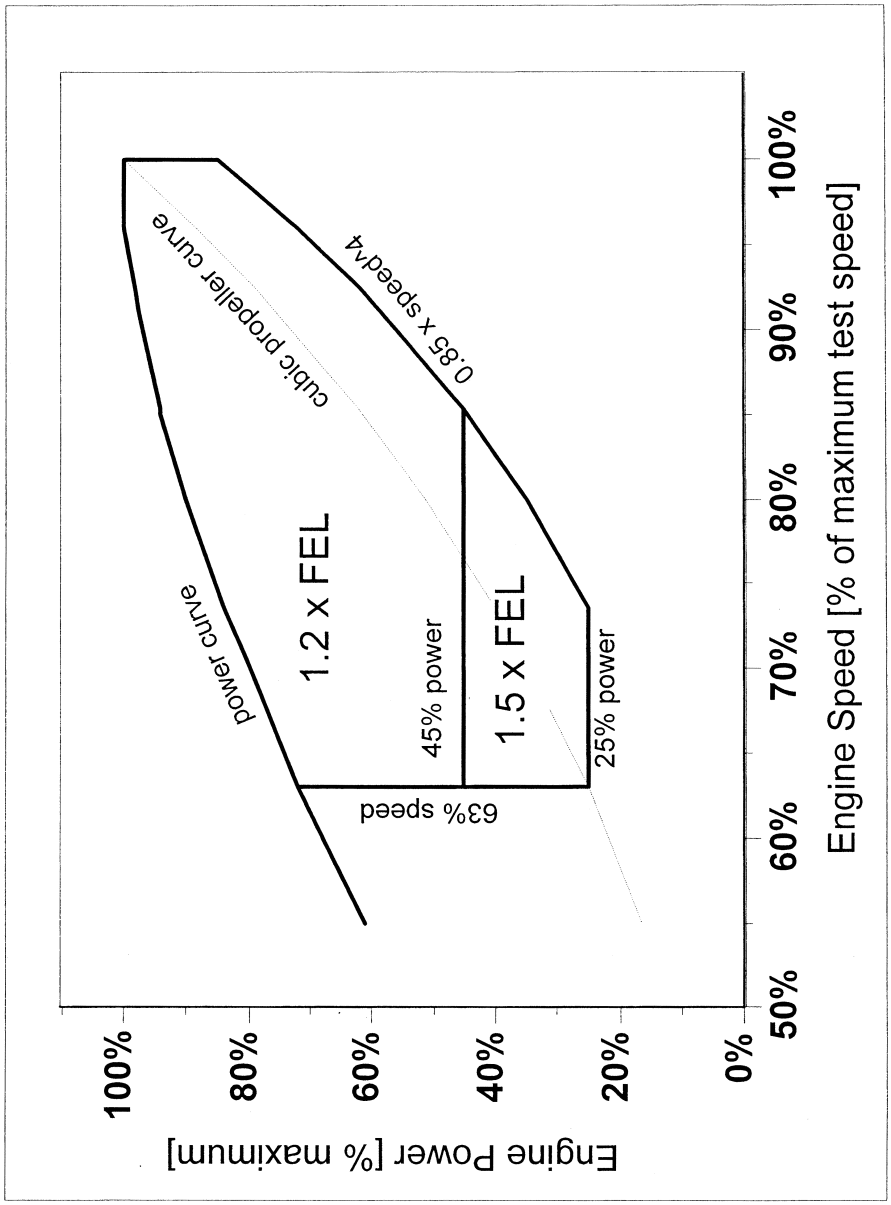

(4) For engines certified using the duty cycle specified in §94.105(b)(1), the Not to Exceed Zone is defined as any load greater than or equal to 25 percent of maximum power at rated speed, and at any speed at which the engine operates in use.

(c)(1) Upon request by the manufacturer, the Administrator may specify a

narrower Not to Exceed Zone for an engine family at the time of certification, provided that the narrower Not to Exceed Zone includes all speeds greater than 63 percent of maximum test speed and loads greater than 25 percent of maximum power at rated speed at which the engines are expected to normally operate in use.

(2) At the time of certification, the Administrator may specify, or require the manufacturer to specify, a broader Not to Exceed Zone for an engine family, provided that the broader Not to Exceed Zone includes only speeds greater than 63 percent of maximum test speed and loads greater than 25 percent of maximum power at rated speed at which the engines are expected to normally operate in use.

(d) Testing conducted to determine compliance with the exhaust emission requirements of § 94.8(e) may be conducted at any ambient air temperature or humidity outside the ranges specified in paragraph (a)(2) of this section, provided that emission measurements are corrected to be equivalent to measurements within the ranges specified in paragraph (a)(2) of this section. Correction of emission measurements made in accordance with this paragraph (d) shall be made in accordance with good engineering practice. The measurements shall be corrected to be within the range using the minimum possible correction.

(e) Testing conducted under this section may not include engine starting.

§ 94.107 Determination of maximum test speed.

(a) *Overview.* This section specifies how to determine maximum test speed from a lug curve. This maximum test speed is used in §§ 94.105 and 94.106 (including the tolerances for engine speed specified in § 94.105).

(b) *Generation of lug curve.* Prior to beginning emission testing, generate maximum measured brakepower versus engine speed data points using the applicable method specified in 40 CFR 86.1332. These data points form the lug curve. It is not necessary to generate the entire lug curve. For the portion of the curve where power increases with increasing speed, it is not necessary to generate points with power less than 90 percent of the maximum power value. For the portion of the curve where power decreases with increasing speed, it is not necessary to generate points with power less than 75 percent of the maximum power value.

(c) *Normalization of lug curve.* (1) Identify the point (power and speed) on the lug curve at which maximum power occurs.

(2) Normalize the power values of the lug curve by dividing them by the maximum power value identified in paragraph (b)(1) of this section, and multiplying the resulting values by 100.

(3) Normalize the engine speed values of the lug curve by dividing them by the speed at which maximum power occurs, which is identified in paragraph (b)(1) of this section, and multiplying the resulting values by 100.

(4) Maximum engine power is located on the normalized lug curve at 100 percent power and 100 percent speed.

(d) *Determination of maximum test speed.* Calculate the maximum test speed from the speedfactor analysis described in this paragraph (d).

(1) For a given combination of engine power and speed (i.e., a given power/speed point), the speedfactor is the distance to the normalized power/speed point from the zero power, zero speed point. The value of the speedfactor is defined as:

$$\text{Speedfactor} = \sqrt{(\text{power})^2 + (\text{speed})^2}$$

(2) Calculate speedfactors for the power/speed data points on the lug curve, and determine the maximum value.

(3) Maximum test speed is the speed at which the maximum value for the speedfactor occurs.

(e) For constant-speed engines, rated speed is the maximum test speed.

§ 94.108 Test fuels.

(a) *Distillate diesel test fuel.* (1) The diesel fuels for testing marine engines designed to operate on distillate diesel fuel shall be clean and bright, with pour and cloud points adequate for operability. The diesel fuel may contain nonmetallic additives as follows: cetane improver, metal deactivator, antioxidant, dehazer, antirust, pour depressant, dye, dispersant, and biocide.

The diesel fuel shall also meet the specifications (as determined using methods incorporated by reference at § 94.5) in Table B–5, or substantially equivalent specifications approved by the Administrator, as follows:

TABLE B–5—FEDERAL TEST FUEL SPECIFICATIONS

Item	Procedure (ASTM) [1]	Value (Type 2–D)
Cetane	D 613–95	40–48
Distillation Range:		
IBP, °C	D 86–97	171–204
10% point, °C	D 86–97	204–238
50% point, °C	D 86–97	243–282
90% point, °C	D 86–97	293–332
EP, °C	D 86–97	321–366
Gravity, API	D 287–92	32–37
Total Sulfur, weight%	D 129–95 or D 2622–98	0.03–0.80
Hydrocarbon composition:		
Aromatics, % vol.	D 1319–98 or D 5186–96	10 [2]
Paraffins, Naphthalenes, Olefins	D 1319–98	[3]
Flashpoint, °C (minimum)	D 93–97	54
Viscosity @ 38 °C, Centistokes	D 445–97	2.0–3.2

[1] All ASTM procedures in this table have been incorporated by reference. See § 94.6.
[2] Minimum.
[3] Remainder.

(2) Other diesel fuels may be used for testing provided:

(i) They are commercially available; and

(ii) Information, acceptable to the Administrator, is provided to show that only the designated fuel would be used in service; and

(iii) Use of a fuel listed under paragraph (a)(1) of this section would have a detrimental effect on emissions or durability; and

(iv) Written approval from the Administrator of the fuel specifications is provided prior to the start of testing.

(3) The specification of the fuel to be used under paragraphs (a)(1), and (a)(2) of this section shall be reported in the application for certification.

(b) *Other fuel types*. For engines that are designed to be capable of using a type of fuel (or mixed fuel) instead of or in addition to distillate diesel fuel (e.g., natural gas, methanol, or nondistillate diesel), and that are expected to use that type of fuel (or mixed fuel) in service, a commercially available fuel of that type shall be used for exhaust emission testing. The manufacturer shall propose for the Administrator's approval a set of test fuel specifications that take into account the engine design and the properties of commercially available fuels. The Administrator may require testing on each fuel if it is designed to operate on more than one fuel. These test fuel specifications shall be reported in the application for certification.

(c) *Service accumulation fuel*. Fuel used for service accumulation shall be representative of the typical fuel expected to be used by the engines in service.

(d) *Correction for sulfur*. (1) Particulate emission measurements from engines without exhaust aftertreatment obtained using a diesel fuel containing more than 0.40 weight percent sulfur may be adjusted to a sulfur content of 0.40 weight percent.

(2) Adjustments to the particulate measurement shall be made using the following equation:

$$PMadj = PM - [BSFC * 0.0917 * (FSF - 0.0040)]$$

Where:

PMadj=adjusted measured PM level [g/kW-hr]

PM=measured weighted PM level [g/KW-hr]

BSFC=measured brake specific fuel consumption [g/KW-hr]

FSF=fuel sulfur weight fraction

Subpart C—Certification Provisions

§ 94.201 Applicability.

The requirements of this subpart are applicable to manufacturers of engines subject to the standards of subpart A of this part.

§ 94.202 Definitions.

The definitions of subpart A of this part apply to this subpart.

§ 94.203 Application for certification.

(a) For each engine family that complies with all applicable standards and requirements, the manufacturer shall submit to the Administrator a completed application for a certificate of conformity.

(b) The application shall be approved and signed by the authorized representative of the manufacturer.

(c) The application shall be updated and corrected by amendment, where necessary, as provided for in § 94.210 to accurately reflect the manufacturer's production.

(d) Each application shall include all the following information:

(1)(i) A description of the basic engine design, including but not limited to, the engine family specifications, the provisions of which are contained in § 94.204.

(ii) A list of distinguishable configurations to be included in the engine family.

(2) An explanation of how the emission control system operates, including detailed descriptions of:

(i) All emission control system components;

(ii) The injection timing map or maps (i.e., degrees before or after top-dead-center), and any functional dependence of such timing on other operational parameters (e.g., engine coolant temperature or engine speed);

(iii) Each auxiliary emission control device (AECD); and

(iv) All fuel system components to be installed on any production or test engine(s).

(3) A description of the test engine.

(4) Special or alternate test procedures, if applicable.

(5) A description of the operating cycle and the period of operation necessary to accumulate service hours on the test engine and stabilize emission levels.

(6) A description of all adjustable operating parameters (e.g., injection timing and fuel rate), including all the following:

(i) The nominal or recommended setting and the associated production tolerances.

(ii) The physically adjustable range (Note: if this is different than the intended adjustable range, describe why these are different).

(iii) The limits or stops used to limit adjustable ranges.

(iv) Production tolerances of the limits or stops used to establish each physically adjustable range.

(v) Information relating to the reason that the physical limits or stops used to establish the physically adjustable range of each parameter, or any other means used to inhibit adjustment, are the most effective means possible of preventing adjustment of parameters to settings outside the manufacturer's specified adjustable ranges on in-use engines.

(7) For families participating in the averaging, banking, and trading program, the information specified in subpart D of this part.

(8) Projected U.S.-directed production volume information for each configuration.

(9) A description of the test equipment and fuel used.

(10) All test data obtained by the manufacturer on each test engine.

(11) The intended useful life period for the engine family, in accordance with § 94.9(a).

(12) The intended deterioration factors for the engine family, in accordance with § 94.218.

(13) All information required for EPA to interpret all messages and parameters broadcast on an engine's controller area network, including but not limited to message or parameter identification, scaling, limit, offset, and transfer function. (The manufacturer may reference publicly released controller area network standards where applicable. The format of this information shall be provided in a format similar to publicly released documents pertaining to controller area network standards.)

(14) A statement that the all the engines included in the engine family comply with the Not To Exceed standards specified in § 94.8(e) when operated under all conditions which may reasonably be expected to be encountered in

normal operation and use; the manufacturer also must provide a detailed description of all testing, engineering analyses, and other information which provides the basis for this statement.

(15) An unconditional statement certifying that all engines included in the engine family comply with all requirements of this part and the Clean Air Act.

(16) A statement indicating duty-cycle and application of the engine (e.g., used to propel planing vessels, use to propel vessels with variable-pitch propellers, constant-speed auxiliary, etc.).

(e) At the Administrator's request, the manufacturer shall supply such additional information as may be required to evaluate the application.

(f)(1) If the manufacturer submits some or all of the information specified in paragraph (d) of this section in advance of its full application for certification, the Administrator shall review the information and make the determinations required in § 94.208 (d) within 90 days of the manufacturer's submittal.

(2) The 90-day decision period is exclusive of any elapsed time during which EPA is waiting for additional information requested from a manufacturer regarding an adjustable parameter (the 90-day period resumes upon receipt of the manufacturer's response). For example, if EPA requests additional information 30 days after the manufacturer submits information under paragraph (f)(1) of this section, then the Administrator would make a determination within 60 days of the receipt of the requested information from the manufacturer.

(g)(1) The Administrator may modify the information submission requirements of paragraph (d) of this section, provided that all of the information specified therein is maintained by the manufacturer as required by § 94.215, and amended, updated, or corrected as necessary.

(2) For the purposes of this paragraph (g), § 94.215 includes all information specified in paragraph (d) of this section, whether or not such information is actually submitted to the Administrator for any particular model year.

(3) The Administrator may review a manufacturer's records at any time. At the Administrator's discretion, this review may take place either at the manufacturer's facility or at another facility designated by the Administrator.

§ 94.204 Designation of engine families.

This section specifies the procedure and requirements for grouping of engines into engine families.

(a) Manufacturers shall divide their engines into groupings of engines which are expected to have similar emission characteristics throughout their useful life. Each group shall be defined as a separate engine family.

(b) For Category 1 marine engines, the following characteristics distinguish engine families:

(1) Fuel;

(2) Cooling method (including cooling medium);

(3) Method of air aspiration;

(4) Method of exhaust aftertreatment (for example, catalytic converter or particulate trap);

(5) Combustion chamber design;

(6) Bore;

(7) Stroke;

(8) Number of cylinders, (engines with aftertreatment devices only);

(9) Cylinder arrangement (engines with aftertreatment devices only); and

(10) Fuel system configuration

(c) For Category 2 marine engines, the following characteristics distinguish engine families:

(1) The combustion cycle (e.g., diesel cycle);

(2) The type of engine cooling employed (air-cooled or water-cooled), and procedure(s) employed to maintain engine temperature within desired limits (thermostat, on-off radiator fan(s), radiator shutters, etc.);

(3) The bore and stroke dimensions;

(4) The approximate intake and exhaust event timing and duration (valve or port);

(5) The location of the intake and exhaust valves (or ports);

(6) The size of the intake and exhaust valves (or ports);

(7) The overall injection, or as appropriate ignition, timing characteristics (i.e., the deviation of the timing curves from the optimal fuel economy timing curve must be similar in degree);

(8) The combustion chamber configuration and the surface-to-volume ratio of the combustion chamber when the piston is at top dead center position, using nominal combustion chamber dimensions;

(9) The location of the piston rings on the piston;

(10) The method of air aspiration (turbocharged, supercharged, naturally aspirated, Roots blown);

(11) The turbocharger or supercharger general performance characteristics (e.g., approximate boost pressure, approximate response time, approximate size relative to engine displacement);

(12) The type of air inlet cooler (air-to-air, air-to-liquid, approximate degree to which inlet air is cooled);

(13) The intake manifold induction port size and configuration;

(14) The type of fuel and fuel system configuration;

(15) The configuration of the fuel injectors and approximate injection pressure;

(16) The type of fuel injection system controls (i.e., mechanical or electronic);

(17) The type of smoke control system;

(18) The exhaust manifold port size and configuration; and

(19) The type of exhaust aftertreatment system (oxidation catalyst, particulate trap), and characteristics of the aftertreatment system (catalyst loading, converter size vs engine size).

(d) Upon request by the manufacturer, engines that are eligible to be included in the same engine family based on the criteria in paragraph (b) or (c) of this section may be divided into different engine families. This request must be accompanied by information the manufacturer believes supports the use of these different engine families.

(e) Upon request by the manufacturer, the Administrator may allow engines that would be required to be grouped into separate engine families based on the criteria in paragraph (b) or (c) of this section to be grouped into a single engine family if the manufacturer demonstrates that the engines will have similar emission characteristics. This request must be accompanied by emission information supporting the appropriateness of such combined engine families.

§ 94.205 Prohibited controls, adjustable parameters.

(a) Any system installed on, or incorporated in, a new engine to enable the engine to conform to the standards contained in this part:

(1) Shall not cause a violation of the general standards of § 94.7.

(2) Shall function during all in-use operation, except as otherwise allowed by this part.

(b) Nonroad engines equipped with adjustable parameters must comply with all requirements of this subpart for any adjustment in the physically adjustable range.

(c) The Administrator may require that adjustable parameters be set to any specification within its adjustable range for certification, selective enforcement audit, or in-use testing to determine compliance with the requirements of this subpart.

(d) In specifying the adjustable range of each adjustable parameter on a new engine, the manufacturer, shall:

(1) Ensure that safe engine operating characteristics are available within that range, as required by section 202(a)(4) of the Clean Air Act, taking into consideration the production tolerances; and

(2) To the maximum extent practicable, limit the physical range of adjustability to that which is necessary for proper operation of the engine.

§ 94.206 Required information.

(a) The manufacturer shall perform the tests required by the applicable test procedures, and submit to the Administrator the information required by this section: *Provided*, that if requested by the manufacturer, the Administrator may waive any requirement of this section for testing of engines for which the required emission data are otherwise available.

(b) The manufacturer shall submit exhaust emission deterioration factors, with supporting data. The determination of the deterioration factors shall be conducted in accordance with § 94.218 to ensure that the engines covered by a

certificate issued under § 94.208 will meet all of the emission standards in § 94.8 in use for the useful life of the engine.

(c) The manufacturer shall submit emission data on such engines tested in accordance with the applicable test procedures of Subpart B of this part. These data shall include zero hour data, if generated. In lieu of providing the emission data required by paragraph (a) of this section, the Administrator may, upon request by the manufacturer, allow the manufacturer to demonstrate (on the basis of previous emission tests, development tests, or other testing information) that the engine will conform with the applicable emission standards of § 94.8.

(d) The manufacturer shall submit a statement that the engines for which certification is requested conform to the requirements in § 94.7 and that the descriptions of tests performed to ascertain compliance with the general standards in § 94.7, and the data derived from such tests, are available to the Administrator upon request.

(e) The manufacturer shall submit a statement that the emission data engine used to demonstrate compliance with the applicable standards of this part is in all material respects as described in the manufacturer's application for certification; that it has been tested in accordance with the applicable test procedures utilizing the fuels and equipment described in the application for certification; and that on the basis of such tests, the engine family conforms to the requirements of this part. If, on the basis of the data supplied and any additional data as required by the Administrator, the Administrator determines that the test engine was not as described in the application for certification or was not tested in accordance with the applicable test procedures utilizing the fuels and equipment as described in the application for certification, the Administrator may make the determination that the engine does not meet the applicable standards. If the Administrator makes such a determination, he/she may withhold, suspend, or revoke the certificate of conformity under § 94.208 (c)(3)(i).

§ 94.207 Special test procedures.

(a) *Establishment of special test procedures by EPA.* The Administrator may, on the basis of written application by a manufacturer, establish special test procedures other than those set forth in this part, for any engine that the Administrator determines is not susceptible to satisfactory testing under the specified test procedures set forth in Subpart B of this part.

(b) *Use of alternate test procedures by a manufacturer.* (1) A manufacturer may elect to use an alternate test procedure, provided that it is equivalent to the specified procedures with respect to the demonstration of compliance, its use is approved in advance by the Administrator, and the basis for the equivalence with the specified test procedures is fully described in the manufacturer's application.

(2) The Administrator may reject data generated under alternate test procedures if the data do not correlate with data generated under the specified procedures.

§ 94.208 Certification.

(a) If, after a review of the application for certification, test reports and data acquired from an engine or from a development data engine, and any other information required or obtained by EPA, the Administrator determines that the application is complete and that the engine family meets the requirements of the Act and this part, he/she will issue a certificate of conformity with respect to such engine family, except as provided by paragraph (c)(3) of this section. The certificate of conformity is valid for each engine family from the date of issuance by EPA until 31 December of the model year or calendar year for which it is issued and upon such terms and conditions as the Administrator deems necessary or appropriate to ensure that the production engines covered by the certificate will meet the requirements of the Act and of this part.

(b) [Reserved]

(c)(1) The manufacturer shall bear the burden of establishing to the satisfaction of the Administrator that the conditions upon which the certificates were issued were satisfied or excused.

(2) The Administrator will determine whether the test data included in the application represents all engines of the engine family.

(3) Notwithstanding the fact that any engine(s) may comply with other provisions of this subpart, the Administrator may withhold or deny the issuance of any certificate of conformity, or suspend or revoke any such certificate(s) which has (have) been issued with respect to any such engine(s) if:

(i) The manufacturer submits false or incomplete information in its application for certification thereof;

(ii) The manufacturer renders inaccurate any test data which it submits pertaining thereto or otherwise circumvents the intent of the Act, or of this part with respect to such engine;

(iii) Any EPA Enforcement Officer is denied access on the terms specified in § 94.215 to any facility or portion thereof which contains any of the following:

(A) An engine which is scheduled to undergo emissions testing, or which is undergoing emissions testing, or which has undergone emissions testing; or

(B) Any components used or considered for use in the construction, modification or buildup of any engine which is scheduled to undergo emissions testing, or which is undergoing emissions testing, or which has undergone emissions testing for purposes of emissions certification; or

(C) Any production engine which is or will be claimed by the manufacturer to be covered by the certificate; or

(D) Any step in the construction of the engine; or

(E) Any records, documents, reports or histories required by this part to be kept concerning any of the items listed in paragraphs (c)(3)(iii)(A) through (D) of this section; or

(iv) Any EPA Enforcement Officer is denied ''reasonable assistance'' (as defined in § 94.215).

(4) In any case in which a manufacturer knowingly submits false or inaccurate information or knowingly renders inaccurate or invalid any test data or commits any other fraudulent acts and such acts contribute substantially to the Administrator's decision to issue a certificate of conformity, the Administrator may deem such certificate void ab initio.

(5) In any case in which certification of an engine is to be withheld, denied, revoked or suspended under paragraph (c)(3) of this section, and in which the Administrator has presented to the manufacturer involved reasonable evidence that a violation of § 94.215 in fact occurred, the manufacturer, if it wishes to contend that, even though the violation occurred, the engine in question was not involved in the violation to a degree that would warrant withholding, denial, revocation or suspension of certification under paragraph (c)(3) of this section, shall have the burden of establishing that contention to the satisfaction of the Administrator.

(6) Any revocation, suspension, or voiding of certification under paragraph (c)(3) of this section shall:

(i) Be made only after the manufacturer concerned has been offered an opportunity for a hearing conducted in accordance with § 94.216; and

(ii) Extend no further than to forbid the introduction into commerce of engines previously covered by the certification which are still in the hands of the manufacturer, except in cases of such fraud or other misconduct that makes the certification invalid ab initio.

(7) The manufacturer may request, within 30 days of receiving notification, that any determination made by the Administrator under paragraph (c)(3) of this section to withhold or deny certification be reviewed in a hearing conducted in accordance with § 94.216. The request shall be in writing, signed by an authorized representative of the manufacturer and shall include a statement specifying the manufacturer's objections to the Administrator's determinations, and data in support of such objections. If the Administrator finds, after a review of the request and supporting data, that the request raises a substantial factual issue, he/she will grant the request with respect to such issue.

(d) In approving an application for certification, the Administrator may specify or require the manufacturer to specify:

(1) A broader range of adjustability than recommended by the manufacturer for those engine parameters which are subject to adjustment, if the Administrator determines that it is not reasonable to expect the parameter to be kept adjusted within the recommended range in use;

(2) A longer useful life period, if the Administrator determines that the useful life of the engines in the engine family, as defined in §94.2, is longer than the period specified by the manufacturer;

(3) Larger deterioration factors, if the Administrator determines that the deterioration factors specified by the manufacturer do not meet the requirements of §94.218; and/or

(4) A broader Not to Exceed Zone subject to the provisions of §94.106(b).

(e) Within 30 days following receipt of notification of the Administrator's determinations made under paragraph (d) of this section, the manufacturer may request a hearing on the Administrator's determinations. The request shall be in writing, signed by an authorized representative of the manufacturer and shall include a statement specifying the manufacturer's objections to the Administrator's determinations and data in support of such objections. If, after review of the request and supporting data, the Administrator finds that the request raises a substantial factual issue, the manufacturer shall be provided with a hearing in accordance with §94.216 with respect to such issue.

§94.209 Special provisions for post-manufacture marinizers.

(a) *Broader engine families.* To be eligible to use the provisions of this paragraph (a), the manufacturer must demonstrate that it is a post-manufacture marinizer as defined in §94.2 and that the base engines used for modification shall have a valid certificate of conformity issued under 40 CFR part 89 or 40 CFR part 92 or the heavy-duty engine provisions of 40 CFR part 86.

(1) In lieu of the requirements of §94.204, an eligible manufacturer may group all its engine models into an engine family consisting of engines within a single category of engines that have similar emission deterioration characteristics.

(2) The manufacturer remains subject to all provisions of this part other than §94.204 for engines using the engine family defined in paragraph (a)(1) of this section.

(b) *Hardship relief.* Post-manufacture marinizers may take any of the otherwise prohibited actions identified in §94.1103(a)(1) if approved in advance by the Administrator, and subject to the following requirements:

(1) Application for relief must be submitted to the Designated Officer in writing prior to the earliest date in which the applying manufacturer would be in violation of §94.1103. The manufacturer must submit evidence showing that the requirements for approval have been met.

(2) The conditions causing the impending violation must not be substantially the fault of the applying manufacturer.

(3) The conditions causing the impending violation must be such that the applying manufacturer will experience serious economic hardship if relief is not granted.

(4) The applying manufacturer must demonstrate that no other allowances under this part will be available to avoid the impending violation.

(5) Any relief may not exceed one year beyond the date relief is granted.

(6) The Administrator may impose other conditions on the granting of relief including provisions to recover the lost environmental benefit.

§94.210 Amending the application and certificate of conformity.

(a) The manufacturer shall notify the Administrator when changes to information required to be described in the application for certification are to be made to a product line covered by a certificate of conformity. This notification shall include a request to amend the application or the existing certificate of conformity. Except as provided in paragraph (e) of this section, no manufacturer shall make said changes or produce said engines prior to receiving approval from the Administrator.

(b) A manufacturer's request to amend the application or the existing

certificate of conformity shall include the following information:

(1) A full description of the change to be made in production, or of the engines to be added;

(2) Engineering evaluations or data showing that the engines as modified or added will comply with all applicable emission standards; and

(3) A determination whether the manufacturer's original test fleet selection is still appropriate, and if the original test fleet selection is determined not to be appropriate, test fleet selection(s) representing the engines changed or added which would have been required if the engines had been included in the original application for certification.

(c) The Administrator may require the manufacturer to perform tests on the engine representing the engine to be added or changed.

(d)(1) Based on the description of the amendment and data derived from such testing as the Administrator may require or conduct, the Administrator will determine whether the change or addition would still be covered by the certificate of conformity then in effect.

(2) If the Administrator determines that the change or new engine(s) meets the requirements of this part and the Act, the appropriate certificate of conformity shall be amended.

(3) If the Administrator determines that the changed engine(s) does not meet the requirements of this part and the Act, the certificate of conformity will not be amended. The Administrator shall provide a written explanation to the manufacturer of the decision not to amend the certificate. The manufacturer may request a hearing on a denial.

(e) A manufacturer may make changes in or additions to production engines concurrently with the notification to the Administrator, as required by paragraph (a) of this section, if the manufacturer complies with the following requirements:

(1) In addition to the information required in paragraph (b) of this section, the manufacturer shall supply supporting documentation, test data, and engineering evaluations as appropriate to demonstrate that all affected engines will still meet applicable emission standards.

(2) If, after a review, the Administrator determines additional testing is required, the manufacturer shall provide the required test data within 30 days or cease production of the affected engines.

(3) If the Administrator determines that the affected engines do not meet applicable requirements, the Administrator will notify the manufacturer to cease production of the affected engines and to recall and correct at no expense to the owner all affected engines previously produced.

(4) Election to produce engines under this paragraph (e) will be deemed to be a consent to recall all engines that the Administrator determines do not meet applicable standards and to cause such nonconformity to be remedied at no expense to the owner.

§ 94.211 Emission-related maintenance instructions for purchasers.

(a) The manufacturer shall furnish or cause to be furnished to the ultimate purchaser of each new engine, subject to the standards prescribed in § 94.8, written instructions for the proper maintenance and use of the engine as are reasonable and necessary to assure the proper functioning of the emissions control system, consistent with the applicable provisions of paragraph (b) of this section.

(1) The maintenance and use instructions required by this section shall be clear and easily understandable.

(2) The maintenance instructions required by this section shall contain a general description of the documentation that would demonstrate for warranty purposes that the ultimate purchaser or any subsequent owner had complied with the instructions.

(b)(1) The manufacturer must provide in boldface type on the first page of the written maintenance instructions notice that maintenance, replacement, or repair of the emission control devices and systems may be performed by any engine repair establishment or individual.

(2) The instructions under paragraph (b)(1) of this section will not include

any condition on the ultimate purchaser's or owner's using, in connection with such engine, any component or service (other than a component or service provided without charge under the terms of the purchase agreement) which is identified by brand, trade, or corporate name. Such instructions also will not directly or indirectly distinguish between service performed by any other service establishments with which such manufacturer has a commercial relationship and service performed by independent vessel or engine repair facilities with which such manufacturer has no commercial relationship.

(3) The prohibition of paragraph (b)(2) of this section may be waived by the Administrator if:

(i) The manufacturer demonstrates to the Administrator's satisfaction that the engine will function properly only if the component or service so identified is used in connection with such engine; and

(ii) The Administrator finds that such a waiver is in the public interest.

(c) The manufacturer shall provide to the Administrator, no later than the time of the submission required by § 94.203, a copy of the emission-related maintenance instructions that the manufacturer proposes to supply to the ultimate purchaser or owner in accordance with this section. The Administrator will review such instructions to determine whether they are reasonable and necessary to ensure the proper functioning of the engine's emission control systems. If the Administrator determines that such instructions are not reasonable and necessary to ensure the proper functioning of the emission control systems, he/she may disapprove the application for certification or may require that the manufacturer modify the instructions.

(d) Any revision to the maintenance instructions which will affect emissions shall be supplied to the Administrator at least 30 days before being supplied to the ultimate purchaser or owner unless the Administrator consents to a lesser period of time, and is subject to the provisions of § 94.210.

(e) This paragraph (e) specifies emission-related scheduled maintenance for purposes of obtaining durability data for marine engines. The maintenance intervals specified in this paragraph are minimum intervals.

(1) All emission-related scheduled maintenance for purposes of obtaining durability data must occur at the same or longer hours of use intervals as those specified in the manufacturer's maintenance instructions furnished to the ultimate purchaser of the engine under paragraph (a) of this section. This maintenance schedule may be updated as necessary throughout the testing of the engine, provided that no maintenance operation is deleted from the maintenance schedule after the operation has been performed on the test equipment or engine.

(2) Any emission-related maintenance which is performed on equipment, engines, subsystems, or components must be technologically necessary to ensure in-use compliance with the emission standards. The manufacturer must submit data which demonstrate to the Administrator that all of the emission-related scheduled maintenance which is to be performed is technologically necessary. Scheduled maintenance must be approved by the Administrator prior to being performed or being included in the emission-related maintenance instructions provided to the purchasers under paragraph (a) of this section.

(i) The Administrator may require longer maintenance intervals than those listed in paragraphs (e)(3) and (e)(4) of this section where the listed intervals are not technologically necessary.

(ii) The Administrator may allow manufacturers to specify shorter maintenance intervals than those listed in paragraphs (e)(3) and (e)(4) of this section where technologically necessary for Category 2 engines.

(3) The adjustment, cleaning, repair, or replacement of items listed in paragraphs (e)(3)(i) through (e)(3)(iii) of this section shall occur at 1,500 hours of use and at 1,500-hour intervals thereafter.

(i) Exhaust gas recirculation system-related filters and coolers.

(ii) Positive crankcase ventilation valve.

(iii) Fuel injector tips (cleaning only).

(4) The adjustment, cleaning and repair of items in paragraphs (e)(4)(i) through (e)(4)(vii) of this section shall occur at 3,000 hours of use and at 3,000-hour intervals thereafter for engines with per-cylinder displacement less than 1.2 liters, or at 4,500-hour intervals thereafter for engines with per-cylinder displacement greater than or equal to 1.2 liters.

(i) Fuel injectors.

(ii) Turbocharger.

(iii) Electronic engine control unit and its associated sensors and actuators.

(iv) Particulate trap or trap-oxidizer system (including related components).

(v) Exhaust gas recirculation system (including all related control valves and tubing), except as otherwise provided in paragraph (e)(3)(i) of this section.

(vi) Catalytic convertor.

(vii) Any other add-on emission-related component (*i.e.*, a component whose sole or primary purpose is to reduce emissions or whose failure will significantly degrade emission control and whose function is not integral to the design and performance of the engine).

(f) Scheduled maintenance not related to emissions which is reasonable and technologically necessary (*e.g.*, oil change, oil filter change, fuel filter change, air filter change, cooling system maintenance, adjustment of idle speed, governor, engine bolt torque, valve lash, injector lash, timing, lubrication of the exhaust manifold heat control valve, *etc.*) may be performed on durability engines at the least frequent intervals recommended by the manufacturer to the ultimate purchaser, (*e.g.*, not the intervals recommended for severe service).

(g) Adjustment of engine idle speed on emission data engines may be performed once before the low-hour emission test point. Any other engine, emission control system, or fuel system adjustment, repair, removal, disassembly, cleaning, or replacement on emission data vehicles shall be performed only with advance approval of the Administrator.

(h) Equipment, instruments, or tools may not be used to identify malfunctioning, maladjusted, or defective engine components unless the same or equivalent equipment, instruments, or tools will be available to dealerships and other service outlets and are:

(1) Used in conjunction with scheduled maintenance on such components; or

(2) Used subsequent to the identification of an engine malfunction, as provided in paragraph (e) of this section for emission data engines; or

(3) Specifically authorized by the Administrator.

(i) All test data, maintenance reports, and required engineering reports shall be compiled and provided to the Administrator in accordance with § 94.215.

(j)(1) The components listed in paragraphs (j)(1)(i) through (j)(1)(vi) of this section are defined as critical emission-related components.

(i) Catalytic convertor.

(ii) Electronic engine control unit and its associated sensors and actuators.

(iii) Exhaust gas recirculation system (including all related filters, coolers, control valves, and tubing).

(iv) Positive crankcase ventilation valve.

(v) Particulate trap or trap-oxidizer system.

(vi) Any other add-on emission-related component (i.e., a component whose sole or primary purpose is to reduce emissions or whose failure will significantly degrade emission control and whose function is not integral to the design and performance of the engine).

(2) All critical emission-related scheduled maintenance must have a reasonable likelihood of being performed in use. The manufacturer must show the reasonable likelihood of such maintenance being performed in-use. Critical emission-related scheduled maintenance items which satisfy one of the conditions defined in paragraphs (j)(2)(i) through (j)(2)(vi) of this section will be accepted as having a reasonable likelihood of being performed in use.

(i) Data are presented which establish for the Administrator a connection between emissions and engine performance such that as emissions increase due to lack of maintenance, vehicle

performance will simultaneously deteriorate to a point unacceptable for typical operation.

(ii) Survey data are submitted which adequately demonstrate to the Administrator with an 80 percent confidence level that 80 percent of such engines already have this critical maintenance item performed in-use at the recommended interval(s).

(iii) A clearly displayed visible signal system approved by the Administrator is installed to alert the equipment operator that maintenance is due. A signal bearing the message ''maintenance needed'' or ''check engine,'' or a similar message approved by the Administrator, shall be actuated at the appropriate usage point or by component failure. This signal must be continuous while the engine is in operation and not be easily eliminated without performance of the required maintenance. Resetting the signal shall be a required step in the maintenance operation. The method for resetting the signal system shall be approved by the Administrator. The system must not be designed to deactivate upon the end of the useful life of the engine or thereafter.

(iv) A manufacturer may desire to demonstrate through a survey that a critical maintenance item is likely to be performed without a visible signal on a maintenance item for which there is no prior in-use experience without the signal. To that end, the manufacturer may in a given model year market up to 200 randomly selected engines per critical emission-related maintenance item without such visible signals, and monitor the performance of the critical maintenance item by the owners to show compliance with paragraph (j)(2)(ii) of this section. This option is restricted to two consecutive model years and may not be repeated until any previous survey has been completed. If the critical maintenance involves more than one engine family, the sample will be sales weighted to ensure that it is representative of all the families in question.

(v) The manufacturer provides the maintenance free of charge, and clearly informs the customer that the maintenance is free in the instructions provided under paragraph (a) of this section.

(vi) The manufacturer uses any other method which the Administrator approves as establishing a reasonable likelihood that the critical maintenance will be performed in-use.

(3) Visible signal systems used under paragraph (j)(2)(iii) of this section are considered an element of design of the emission control system. Therefore, disabling, resetting, or otherwise rendering such signals inoperative without also performing the indicated maintenance procedure is a prohibited act.

§94.212 Labeling.

(a) *General requirements.* (1) Each new engine covered by a certificate of conformity under §94.208 shall be labeled by the manufacturer in the manner described in this paragraph (b) of this section at the time of manufacture.

(2) Each new marine engine modified from a base engine by post-manufacture marinizers in accordance with the provisions of §94.209 (b) and covered by a certificate of conformity under §94.208 shall be labeled by the PMM in the manner described in paragraph (b) of this section.

(b) *Engine labels.* Engine labels meeting the specifications of this section shall be applied to every engine by the manufacturer at the point of original manufacture. Engine labels shall be permanent and legible and shall be affixed to the engine in a position in which it will be readily visible after installation of the engine in the vessel. The label shall be attached to an engine part necessary for normal operation and not normally requiring replacement during the useful life of the engine. The label shall be affixed by the manufacturer in such manner that it cannot be removed without destroying or defacing the label. The label shall not be affixed to any equipment which is easily detached from such engine. The label may be not be made up of more than one piece without the advance approval of the Administrator. The label shall contain the following information lettered in the English language in block letters and numerals, which shall be of a color that contrasts with the background of the label:

(1) The label heading: Marine Engine Emission Control Information.

(2) Full corporate name and trademark of the manufacturer.

(3) The model year.

(4) The per-cylinder displacement of the engine.

(5) Engine family and configuration identification.

(6) A prominent unconditional statement of compliance with U.S. Environmental Protection Agency regulations which apply to marine engines designated by the parameters of paragraphs 5(b)(2)(v)(A) through (E) of this section.

(7) The useful life of the engine.

(8) The standards and/or FELs to which the engine was certified.

(9) Engine tune-up specifications and adjustments, as recommended by the manufacturer in accordance with the applicable emission standards, including but not limited to idle speeds(s), injection timing, valve lash (as applicable), as well as other parameters deemed necessary by the manufacturer.

(10) The application for which the engine family is certified. (For example: constant-speed auxiliary, variable-speed propulsion engines used with fixed-pitch propellers, etc.)

(c) The provisions of this section shall not prevent a manufacturer from also providing on the label any other information that such manufacturer deems necessary for, or useful to, the proper operation and satisfactory maintenance of the vessel or engine.

(d) Engines certified under the voluntary standards described in § 94.8(f) to be designated as Blue Sky Series engines must contain the statement on the label: ''Blue Sky Series''.

(e) If an engine can be modified to operate on residual fuel, but has not been certified to meet the standards on such a fuel, it must contain the statement on the label: ''THIS ENGINE IS CERTIFIED FOR OPERATION ONLY WITH DISTILLATE DIESEL FUEL. MODIFYING THE ENGINE TO OPERATE ON RESIDUAL FUEL MAY BE A VIOLATION OF FEDERAL LAW SUBJECT TO CIVIL PENALTIES.'' The Administrator may approve alternate language.

§ 94.213 Submission of engine identification numbers.

(a) Upon request of the Administrator, the manufacturer of any engine covered by a certificate of conformity shall, within 30 days of receipt of such request, identify by engine identification number, the engines covered by the certificate of conformity.

(b) The manufacturer of any engines covered by a certificate of conformity shall provide to the Administrator, within 60 days of the issuance of a certificate of conformity, an explanation of the elements in any engine identification coding system in sufficient detail to enable the Administrator to identify those engines which are covered by a certificate of conformity.

§ 94.214 Production engines.

Any manufacturer obtaining certification under this part shall supply to the Administrator, upon his/her request, a reasonable number of production engines, as specified by the Administrator. The engines shall be representative of the engines, emission control systems, and fuel systems offered and typical of production engines available for sale or use under the certificate. These engines shall be supplied for testing at such time and place and for such reasonable periods as the Administrator may require.

§ 94.215 Maintenance of records; submittal of information; right of entry.

(a) Any manufacturer subject to any of the standards or procedures prescribed in this subpart shall establish, maintain and retain the following adequately organized and indexed records:

(1) General records. The records required to be maintained by this paragraph (a) shall consist of:

(i) Identification and description of all certification engines for which testing is required under this subpart.

(ii) A description of all emission control systems which are installed on or incorporated in each certification engine.

(iii) A description of all procedures used to test each such certification engine.

(iv) A copy of all applications for certification, filed with the Administrator.

(2) Individual records. (i) A brief history of each engine used for certification under this subpart including:

(A) In the case where a current production engine is modified for use as a certification engine, a description of the process by which the engine was selected and of the modifications made. In the case where the certification engine is not derived from a current production engine, a general description of the buildup of the engine (*e.g.*, whether experimental heads were cast and machined according to supplied drawings). In the cases in the previous two sentences, a description of the origin and selection process for fuel system components, ignition system components (as applicable), intake air pressurization and cooling system components, cylinders, pistons and piston rings, exhaust smoke control system components, and exhaust aftertreatment devices as applicable, shall be included. The required descriptions shall specify the steps taken to assure that the certification engine, with respect to its engine, drivetrain, fuel system, emission control system components, exhaust aftertreatment devices, or any other devices or components as applicable, that can reasonably be expected to influence exhaust emissions will be representative of production engines and that either: all components and/or engine, construction processes, component inspection and selection techniques, and assembly techniques employed in constructing such engines are reasonably likely to be implemented for production engines; or that they are as close as practicable to planned construction and assembly process.

(B) A complete record of all emission tests performed (except tests performed by EPA directly), including test results, the date and purpose of each test, and the number of hours accumulated on the engine.

(C) A record and description of all maintenance and other servicing performed, giving the date of the maintenance or service and the reason for it.

(D) A record and description of each test performed to diagnose engine or emission control system performance, giving the date and time of the test and the reason for it.

(E) A brief description of any significant events affecting the engine during the period covered by the history and not described by an entry under one of the previous headings, including such extraordinary events as accidents involving the engine or dynamometer runaway.

(ii) Each such history shall be started on the date that the first of any of the selection or buildup activities in paragraph (a)(2)(i)(A) of this section occurred with respect to the certification engine and shall be kept in a designated location.

(3) All records, other than routine emission test records, required to be maintained under this subpart shall be retained by the manufacturer for a period of 8 years after issuance of all certificates of conformity to which they relate. Routine emission test records shall be retained by the manufacturer for a period of one (1) year after issuance of all certificates of conformity to which they relate. Records may be retained as hard copy or reduced to computer disks, etc., depending on the record retention procedures of the manufacturer: *Provided*, that in every case all the information contained in the hard copy shall be retained.

(4) Nothing in this section limits the Administrator's discretion in requiring the manufacturer to retain additional records or submit information not specifically required by this section.

(5) Pursuant to a request made by the Administrator, the manufacturer shall submit to him/her the information that is required to be retained.

(6) EPA may void a certificate of conformity *ab initio* for an engine family for which the manufacturer fails to retain the records required in this section or to provide such information to the Administrator upon request.

(b) The manufacturer of engines subject to any of the standards prescribed in this part shall submit to the Administrator, at the time of issuance by the manufacturer, copies of all instructions or explanations regarding the use, repair, adjustment, maintenance, or testing of such engine, relevant to the control of crankcase, or exhaust

emissions issued by the manufacturer, for use by other manufacturers, assembly plants, distributors, dealers, owners and operators. Any material not translated into the English language need not be submitted unless specifically requested by the Administrator.

(c) Any manufacturer participating in averaging, banking and trading program of subpart D of this part must comply with the maintenance of records requirements of § 94.308.

(d)(1) Any manufacturer who has applied for certification of a new engine subject to certification testing under this subpart shall admit or cause to be admitted any EPA Enforcement Officer during operating hours on presentation of credentials to any of the following:

(i) Any facility where any such tests or any procedures or activities connected with such test are or were performed;

(ii) Any facility where any engine which is being tested (or was tested, or is to be tested) is present;

(iii) Any facility where any construction process or assembly process used in the modification or buildup of such an engine into a certification engine is taking place or has taken place; or

(iv) Any facility where any record or other document relating to any of the activities listed in this paragraph (d)(1).

(2) Upon admission to any facility referred to in paragraph (d)(1) of this section, any EPA Enforcement Officer shall be allowed:

(i) To inspect and monitor any part or aspect of such procedures, activities and testing facilities including, but not limited to, monitoring engine preconditioning, emissions tests, service accumulation, maintenance, and engine storage procedures, and to verify correlation or calibration of test equipment;

(ii) To inspect and make copies of any such records, designs, or other documents, including those records specified in Subpart D of this part; and

(iii) To inspect and/or photograph any part or aspect of any such certification engine and any components to be used in the construction thereof.

(3) In order to allow the Administrator to determine whether or not production engines, conform to the conditions upon which a certificate of conformity has been issued, or conform in all material respects to the design specifications applicable to those engines, as described in the application for certification for which a certificate of conformity has been issued, any manufacturer shall admit any EPA Enforcement Officer on presentation of credentials to:

(i) Any facility where any document, design or procedure relating to the translation of the design and construction of engines and emission related components described in the application for certification or used for certification testing into production engines is located or carried on;

(ii) Any facility where any engines to be introduced into commerce are manufactured; and

(iii) Any facility where records specified this section are located.

(4) On admission to any such facility referred to in paragraph (d)(3) of this section, any EPA Enforcement Officer shall be allowed:

(i) To inspect and monitor any aspects of such manufacture and other procedures;

(ii) To inspect and make copies of any such records, documents or designs;

(iii) To inspect and photograph any part or aspect of any such engine(s) and any component used in the assembly thereof that are reasonably related to the purpose of his/her entry; and

(iv) To inspect and make copies of any records and documents specified in this section.

(5) Any EPA Enforcement Officer shall be furnished by those in charge of a facility being inspected with such reasonable assistance as he/she may request to help him/her discharge any function listed in this part. Each applicant for or recipient of certification is required to cause those in charge of a facility operated for its benefit to furnish such reasonable assistance without charge to EPA whether or not the applicant controls the facility.

(6) The duty to admit or cause to be admitted any EPA Enforcement Officer applies to any facility involved in the manufacturing or assembling of engines, whether or not the manufacturer

owns or controls the facility in question and applies both to domestic and to foreign manufacturers and facilities. EPA will not attempt to make any inspections which it has been informed that local law forbids. However, if local law makes it impossible to do what is necessary to insure the accuracy of data generated at a facility, no informed judgment that an engine is certifiable or is covered by a certificate can properly be based on those data. It is the responsibility of the manufacturer to locate its testing and manufacturing facilities in jurisdictions where this situation will not arise.

(7) For purposes of this section:

(i) ''Presentation of credentials'' shall mean display of the document designating a person as an EPA Enforcement Officer.

(ii) Where component or engine storage areas or facilities are concerned, ''operating hours'' shall mean all times during which personnel other than custodial personnel are at work in the vicinity of the area or facility and have access to it.

(iii) Where facilities or areas other than those covered by paragraph (d)(7)(ii) of this section are concerned, ''operating hours'' shall mean all times during which an assembly line is in operation or all times during which testing, maintenance, service accumulation, production or compilation of records, or any other procedure or activity related to certification testing, to translation of designs from the test stage to the production stage, or to engine manufacture, or assembly is being carried out in a facility.

(iv) ''Reasonable assistance'' includes, but is not limited to, clerical, copying, interpretation and translation services, the making available on request of personnel of the facility being inspected during their working hours to inform the EPA Enforcement Officer of how the facility operates and to answer his questions, and the performance on request of emissions tests on any engine which is being, has been, or will be used for certification testing. Such tests shall be nondestructive, but may require appropriate service accumulation. A manufacturer may be compelled to cause the personal appearance of any employee at such a facility before an EPA Enforcement Officer by written request for his appearance, signed by the Assistant Administrator for Air and Radiation or the Assistant Administrator for Enforcement and Compliance Assurance, served on the manufacturer. Any such employee who has been instructed by the manufacturer to appear will be entitled to be accompanied, represented and advised by counsel.

(v) Any entry without 24 hour prior written or oral notification to the affected manufacturer shall be authorized in writing by the Assistant Administrator for Air and Radiation or the Assistant Administrator for Enforcement and Compliance Assurance.

(8) EPA may void a certificate of conformity *ab initio* for engines introduced into commerce if the manufacturer (or contractor for the manufacturer, if applicable) fails to comply with any provision of this section.

§ 94.216 Hearing procedures.

(a)(1) After granting a request for a hearing under § 94.210 or § 94.208, the Administrator shall designate a Presiding Officer for the hearing.

(2) The hearing shall be held as soon as practicable at a time and place fixed by the Administrator or by the Presiding Officer.

(3) In the case of any hearing requested pursuant to § 94.208, the Administrator may in his/her discretion direct that all argument and presentation of evidence be concluded within such fixed period not less than 30 days as he/she may establish from the date that the first written offer of a hearing is made to the manufacturer. To expedite proceedings, the Administrator may direct that the decision of the Presiding Officer (who may, but need not be the Administrator) shall be the final EPA decision.

(b)(1) Upon his/her appointment pursuant to paragraph (a) of this section, the Presiding Officer will establish a hearing file. The file shall consist of the notice issued by the Administrator under § 94.210 or § 94.208 together with any accompanying material, the request for a hearing and the supporting data submitted therewith, and all documents relating to the request for certification and all documents submitted

therewith, and correspondence and other data material to the hearing.

(2) The hearing file will be available for inspection by the applicant at the office of the Presiding Officer.

(c) An applicant may appear in person, or may be represented by counsel or by any other duly authorized representative.

(d)(1) The Presiding Officer, upon the request of any party, or in his/her discretion, may arrange for a prehearing conference at a time and place specified by him/her to consider the following:

(i) Simplification of the issues;

(ii) Stipulations, admissions of fact, and the introduction of documents;

(iii) Limitation of the number of expert witnesses;

(iv) Possibility of agreement disposing of all or any of the issues in dispute;

(v) Such other matters as may aid in the disposition of the hearing, including such additional tests as may be agreed upon by the parties.

(2) The results of the conference shall be reduced to writing by the Presiding Officer and made part of the record.

(e)(1) Hearings shall be conducted by the Presiding Officer in an informal but orderly and expeditious manner. The parties may offer oral or written evidence, subject to the exclusion by the Presiding Officer of irrelevant, immaterial and repetitious evidence.

(2) Witnesses will not be required to testify under oath. However, the Presiding Officer shall call to the attention of witnesses that their statements may be subject to the provisions of 18 U.S.C. 1001 which imposes penalties for knowingly making false statements or representations, or using false documents in any matter within the jurisdiction of any department or agency of the United States.

(3) Any witness may be examined or cross-examined by the Presiding Officer, the parties, or their representatives.

(4) Hearings shall be reported verbatim. Copies of transcripts of proceedings may be purchased by the applicant from the reporter.

(5) All written statements, charts, tabulations, and similar data offered in evidence at the hearings shall, upon a showing satisfactory to the Presiding Officer of their authenticity, relevancy, and materiality, be received in evidence and shall constitute a part of the record.

(6) Oral argument may be permitted in the discretion of the Presiding Officer and shall be reported as part of the record unless otherwise ordered by him/her.

(f)(1) The Presiding Officer shall make an initial decision which shall include written findings and conclusions and the reasons or basis therefor on all the material issues of fact, law, or discretion presented on the record. The findings, conclusions, and written decision shall be provided to the parties and made a part of the record. The initial decision shall become the decision of the Administrator without further proceedings unless there is an appeal to the Administrator or motion for review by the Administrator within 30 days of the date the initial decision was filed.

(2) On appeal from or review of the initial decision, the Administrator shall have all the powers which he/she would have in making the initial decision including the discretion to require or allow briefs, oral argument, the taking of additional evidence or the remanding to the Presiding Officer for additional proceedings. The decision by the Administrator shall include written findings and conclusions and the reasons or basis therefor on all the material issues of fact, law, or discretion presented on the appeal or considered in the review.

§ 94.217 Emission data engine selection.

(a) The manufacturer must select for testing, from each engine family, the engine configuration which is expected to be worst-case for exhaust emission compliance on in-use engines, considering all exhaust emission constituents and the range of installation options available to vessel builders. The engines selected for testing are collectively described as the test fleet.

(b) Each engine in the test fleet must be constructed to be representative of production engines.

(c) After review of the manufacturer's test fleet, the Administrator may

select from the available fleet one additional test engine from each engine family.

(d) Each engine selected shall be tested according to the provisions of Subpart B of this part.

(e) In lieu of testing an emission data engine selected under paragraph (a) of this section and submitting the resulting data, a manufacturer may, with Administrator approval, use emission data on a similar engine for which certification has previously been obtained or for which all applicable data required under this subpart have previously been submitted. These data must be submitted in the application for certification.

§ 94.218 Deterioration factor determination.

Manufacturers shall determine exhaust emission deterioration factors using good engineering judgement according to the provisions of this section. Every deterioration factor must be, in the Administrator's judgment, consistent with emissions increases observed in-use based on emission testing of similar engines. Deterioration factors that predict emission increases over the useful life of an engine that are significantly less than the emission increases over the useful life observed from in-use testing of similar engines shall not be used.

(a) A separate exhaust emission deterioration factor shall be established for each engine family and for each emission constituent applicable to that family.

(b) *Calculation procedures.* (1) *For engines not utilizing aftertreatment technology (e.g., catalyst).* For each applicable emission constituent, an additive deterioration factor shall be used; that is, a deterioration factor that when added to the low mileage emission rate equals the emission rate at the end of useful life. However, if the deterioration factor supplied by the manufacturer is less than zero, it shall be zero for the purposes of this section.

(2) *For engines utilizing aftertreatment technology (e.g., catalyst).* For each applicable emission constituent, a multiplicative deterioration factor shall be used; that is deterioration factors that when multiplied by the low mileage emission rate equal the emission rate at the end of useful life. However, if the deterioration factor supplied by the manufacturer is less than one, it shall be one for the purposes of this section.

(c) *Rounding.* (1) In the case of a multiplicative exhaust emission deterioration factor, the factor shall be rounded to three places to the right of the decimal point in accordance with ASTM E 29–93a (incorporated by reference at § 94.5).

(2) In the case of an additive exhaust emission deterioration factor, the factor shall be established to a minimum of two places to the right of the decimal in accordance with ASTM E 29–93a (incorporated by reference at § 94.5).

(d)(1) Except as allowed by paragraph (d)(2) of this section, the manufacturer shall determine the deterioration factors based on service accumulation and related testing, according to the manufacturer's procedures, and the provisions of §§ 94.219 and 94.220. The manufacturer shall determine the form and extent of this service accumulation, consistent with good engineering practice, and shall describe this process in the application for certification.

(2) *Alternatives to service accumulation and testing for the determination of a deterioration factor.* A written explanation of the appropriateness of using an alternative must be included in the application for certification.

(i) *Carryover and carryacross of durability emission data.* In lieu of testing an emission data or durability data engine selected under § 94.217 or § 94.219, and submitting the resulting data, a manufacturer may, with Administrator approval, use exhaust emission deterioration data on a similar engine for which certification to the same standard has previously been obtained or for which all applicable data required under this subpart have previously been submitted. These data must be submitted in the application for certification.

(ii) *Use of non-marine deterioration data.* In the case where a manufacturer produces a certified motor vehicle engine, locomotive engine, or other nonroad engine that is similar to the marine engine to be certified, deterioration data from the non-marine engine may be applied to the marine engine. This application of deterioration

data from such an engine to a marine engine is subject to Administrator approval, and the determination of whether the engines are similar shall be based on good engineering judgment.

(iii) *Engineering analysis for established technologies.* In the case where an engine family uses technology which is well established, an analysis based on good engineering practices may be used in lieu of testing to determine a deterioration factor for that engine family. Engines using exhaust gas recirculation or aftertreatment are excluded from this provision. The manufacturer shall provide a written statement to the Administrator that all data, analyses, test procedures, evaluations, and other documents, on which the deterioration factor is based, are available to the Administrator upon request.

§ 94.219 Durability data engine selection.

(a) The manufacturer shall select for durability testing, from each engine family, the engine configuration which is expected to generate the highest level of exhaust emission deterioration on engines in use, considering all exhaust emission constituents and the range of installation options available to vessel builders. The manufacturer shall use good engineering judgment in making this selection.

(b) Carryover data satisfying the provisions of § 94.220 may also be used in lieu of testing the configuration selected in paragraph (a) of this section.

(c) Durability data engines shall be built from subsystems and components that are representative of actual production engines.

§ 94.220 Service accumulation.

(a) Each test emission data engine in the test fleet may be operated with all emission control systems operating properly for a period, up to 125 hours of operation, that is sufficient to stabilize emissions.

(b) Durability data engines shall accumulate service in a manner which will represent the emission levels from in-use engines over their full useful life, consistent with good engineering judgement.

(1) Components may be removed from the engine and aged separately.

(2) End of useful life emission levels and deterioration factors may be projected from durability data engines which have completed less than full useful life service accumulation, provided that the amount of service accumulation completed and projection procedures are determined using good engineering judgement.

(c) No maintenance, other than recommended lubrication and filter changes or maintenance otherwise allowed by this part, may be performed during service accumulation without the Administrator's approval.

(d) The manufacturer must maintain, and provide to the Administrator if requested, records stating the rationale for selecting the service accumulation period and records describing the method used to accumulate service hours on the test engine(s).

§ 94.221 Application of good engineering judgment.

(a) The manufacturer shall exercise good engineering judgment in making all decisions called for under this part, including but not limited to selections, categorizations, determinations, and applications of the requirements of the part.

(b) Upon written request by the Administrator, the manufacturer shall provide within 15 working days (or such longer period as may be allowed by the Administrator) a written description of the engineering judgment in question.

(c) The Administrator may reject any such decision by a manufacturer if it is not based on good engineering judgment or is otherwise inconsistent with the requirements of this part.

(d) If the Administrator rejects a decision by a manufacturer with respect to the exercise of good engineering judgment, the following provisions shall apply:

(1) If the Administrator determines that incorrect information was deliberately used in the decision process, that important information was deliberately overlooked, that the decision was not made in good faith, or that the decision was not made with a rational basis, the Administrator may suspend

or void *ab initio* a certificate of conformity.

(2) If the Administrator determines that the manufacturer's decision is not covered by the provisions of paragraph (d) (1) of this section, but that a different decision would reflect a better exercise of good engineering judgment, then the Administrator will notify the manufacturer of this concern and the basis of the concern.

(i) The manufacturer shall have at least 30 days to respond to this notice. The Administrator may extend this response period upon request from the manufacturer if it is necessary to generate additional data for the manufacturer's response.

(ii) The Administrator shall make the final ruling after considering the information provided by the manufacturer during the response period. If the Administrator determines that the manufacturer's decision was not made using good engineering judgment, he/she may reject that decision and apply the new ruling to future corresponding decisions as soon as practicable.

(e) The Administrator shall notify the manufacturer in writing regarding any decision reached under paragraph (d)(1) or (2) of this section. The Administrator shall include in this notification the basis for reaching the determination.

(f) Within 30 working days following receipt of notification of the Administrator's determinations made under paragraph (d) of this section, the manufacturer may request a hearing on those determinations. The request shall be in writing, signed by an authorized representative of the manufacturer, and shall include a statement specifying the manufacturer's objections to the Administrator's determinations, and data or other analysis in support of such objections. If, after review of the request and supporting data or analysis, the Administrator finds that the request raises a substantial factual issue, he/she shall provide the manufacturer a hearing in accordance with § 94.216 with respect to such issue.

§ 94.222 Certification of engines on imported vessels.

For marine engines subject to the requirements of this part that are installed on imported vessels, the Administrator may specify alternate certification provisions as necessary.

Subpart D Certification Averaging, Banking, and Trading Provisions

§ 94.301 Applicability.

Marine engine families subject to the standards of Subpart A of this part are eligible to participate in the certification averaging, banking, and trading program described in this subpart.

The provisions of this subpart apply to manufacturers of new engines that are subject to the emission standards of § 94.8.

§ 94.302 Definitions.

The definitions of Subpart A of this part apply to this subpart. The following definitions also apply:

Applicable standard means a standard that would have otherwise been applicable had the engine not been certified under this subpart to an FEL different than that standard.

Broker means any entity that facilitates a trade between a buyer and seller.

Buyer means the entity that receives credits as a result of trade.

Reserved credits means credits that have been generated but have not yet been reviewed by EPA or used to demonstrate compliance under the averaging provisions of this subpart.

Seller means the entity that provides credits during a trade.

§ 94.303 General provisions.

(a) Participation in the averaging, banking, and trading program is voluntary. A manufacturer may choose to involve some or all of its engine families in any or all aspects of the program.

(b) An engine family is eligible to participate in the certification averaging, banking, and trading program for THC+NO_X and PM emissions only if it is subject to regulation under this part with certain exceptions specified

in paragraph (c) of this section. No averaging, banking, and trading program is available for meeting the CO standards of this part.

(c) Engines may not participate in the certification averaging, banking, and trading program if they are exported. Only engines certified under this part are eligible for generation or use of credits in this certification averaging, banking, and trading program. Engines certified to the Blue Sky provisions of § 94.8(f) are not eligible for inclusion in this certification averaging, banking, and trading program.

(d) Averaging involves the generation of credits by a manufacturer for use by that same manufacturer in the same calendar year. A manufacturer may use averaging during certification to offset an emission exceedance of an engine family caused by an FEL above the applicable emission standard, subject to the provisions of this subpart.

(e) Banking involves the generation of credits by a manufacturer in a given calendar year for use in a subsequent model year. A manufacturer may bank actual credits only after the end of the calendar year and after EPA has reviewed the manufacturer's end-of-year reports. During the calendar year and before submittal of the end-of-year report, credits originally designated in the certification process for banking will be considered reserved and may be redesignated for trading or averaging in the end-of-year report. Credits declared for banking from the previous calendar year that have not been reviewed by EPA may be used in averaging or trading transactions. However, such credits may be revoked at a later time following EPA review of the end-of-year report or any subsequent audit actions.

(f) Trading involves the sale of banked credits for use in certification of new engines under this part. Only banked credits may be traded; reserved credits may not be traded.

§ 94.304 Compliance requirements.

(a) Manufacturers wishing to participate in certification averaging, banking and trading programs shall select a FEL for each engine family they wish to include. The level of the FEL shall be selected by the manufacturer, subject to the upper limits described in paragraph (m) of this section. An engine family certified to an FEL is subject to all provisions specified in this part, except that the applicable FEL replaces the applicable THC+NO_X and PM emission standard for the family participating in the averaging, banking, and trading program.

(b) A manufacturer may certify one or more engine families at FELs above or below the applicable emission standard, provided the summation of the manufacturer's projected balance of all credit transactions in a given calendar year is greater than or equal to zero, as calculated for each family under § 94.305 and reported under § 94.309.

(c) Manufacturers certifying engine families with FELs exceeding the applicable emission standard shall obtain emission credits in amounts sufficient to address the shortfall. Credits may be obtained from averaging, banking, or trading, subject to the restrictions described in this subpart.

(d) Manufacturers certifying engine families with FELs below the applicable emission standard may generate emission credits to average, bank, or trade, or a combination thereof.

(e) An engine family may not generate credits for one pollutant while also using credits for another pollutant in the same model year.

(f) Credits may only be used for certification; they may not be used to remedy a violation of the FEL determined by production line or in-use testing. Credits may be used to allow subsequent production of engines for an engine family failing production line testing if the manufacturer elects to recertify to a higher FEL.

(g) [Reserved].

(h) If an FEL is changed after initial certification in any given model year, the manufacturer must conduct production line testing to verify that the emission levels are achieved, with one exception: when an FEL is changed immediately after (and because of) a production line testing failure, additional verification testing is not required.

(i) Manufacturers participating in the averaging, banking and trading program must demonstrate compliance with the applicable emission standards

at the end of the model year. Manufacturers that have certified engine families to FELs above the applicable emission standards and do not have sufficient emission credits to offset the difference between the emission standard and the FEL for such engine families will be in violation of the conditions of the certificate of conformity for such engine families. The certificates of conformity may be voided *ab initio* for those engine families.

(j) In the event of a negative credit balance resulting from a credit trade, both the buyer(s) and the seller(s) are liable, except in cases involving fraud. Certificates of all engine families participating in a negative trade may be voided *ab initio*.

(1) Where a buyer of credits is not responsible for causing the negative credit balance, the buyer is only liable to supply additional credits equivalent to any amount of invalid credits that the buyer used for its engine family(ies).

(2) Credit holders responsible for the credit shortfall may be subject to the requirements of § 94.309(g)(3).

(k) Credits generated by Category 1 engine families may be used for compliance by Category 1 or Category 2 engine families. Credits generated from Category 1 engine families for use by Category 2 engine families must be discounted by 25 percent. Credits generated by Category 2 engine families may be used for compliance only by Category 2 engine families.

(l) Credit life shall be unlimited.

(m) Upper limits. The FELs for THC+NO_X and PM for new engines certified for participation in this averaging, banking and trading program may not exceed the following values:

(1) For Category 1 engines, the FEL may not exceed the levels contained in Table D–1, which follows:

TABLE D–1—CATEGORY 1 UPPER LIMITS FOR TIER 2 FAMILY EMISSION LIMITS

Subcategory liters/cylinder	Model year [1]	THC+NO_X FEL g/kW-hr	PM FEL g/kW-hr
Power ≥ 37 kW disp. < 0.9	2005	11.5	1.2
0.9 ≤ disp. < 1.2	2004	11.5	1.2
1.2 ≤ disp. < 2.5	2004	10.5	0.54
2.5 ≤ disp. < 5.0	2007	10.5	0.54

[1] The model years listed indicate the model years for which the specified standards start.

(2) For Category 2 engines, the FEL may not exceed the applicable standard by more than 25 percent.

§ 94.305 Credit generation and use calculation.

(a) For each participating engine family, THC+NO_X and PM emission credits (positive or negative) are to be calculated according to the equation in paragraph (b) of this section and rounded in accordance with ASTM E 29–93a (incorporated by reference at § 94.5), to the nearest one-hundredth of a megagram (Mg). Consistent units are to be used throughout the calculation.

(b) Credits (Mg) for each engine family are calculated as: Emission credits = (Std—FEL) X (UL) X (Production) X (AvgPR) X (LF) X (10^{-6})

Where:

(i) Std = the applicable cycle-weighted marine engine THC+NO_X or PM emission standard in grams per kilowatt-hour.

(ii) FEL = the family emission limit for the engine family in grams per kilowatt-hour. (The FEL may not exceed the limit established in § 94.304(m) for each pollutant.)

(iii) UL = the useful life in hours of operation.

(iv) Production = the number of engines participating in the averaging, banking, and trading program within the given engine family during the calendar year (or the number of engines in the subset of the engine family for which credits are being calculated). Quarterly production projections are used for initial certification. Actual applicable production/sales volumes are used for end-of-year compliance determination.

(v) AvgPR = average power rating of all of the configurations within an engine family, calculated on a sales-weighted basis, in kilowatts.

(vi) LF = the load factor, dependent on whether the engine is intended for propulsion or auxiliary applications, as follows:

(A) 0.69 for propulsion engines,

(B) 0.51 for auxiliary engines.

§ 94.306 Certification.

(a) In the application for certification a manufacturer must:

(1) Declare its intent to include specific engine families in the averaging, banking, and/or trading programs. Separate declarations are required for each pollutant (THC+NO_X and PM).

(2) Declare FELs for each engine family participating in certification averaging, banking, and/or trading.

(i) The FELs must be to the same number of significant digits as the emission standard.

(ii) In no case may the FEL exceed the upper limit prescribed in § 94.304(m).

(3) Conduct and submit detailed calculations of projected emission credits (positive or negative) based on quarterly production projections for each participating family and for each pollutant, using the applicable equation in § 94.305 and the applicable values of the terms in the equation for the specific family.

(i) If the engine family is projected to have negative emission credits, state specifically the source (manufacturer/engine family) of the credits necessary to offset the credit deficit according to quarterly projected production.

(ii) If the engine family is projected to generate credits, state specifically where the quarterly projected credits will be applied (manufacturer/engine family or reserved).

(4) Submit a statement that the engines for which certification is requested will not, to the best of the manufacturer's belief, cause the manufacturer to have a negative credit balance when all credits are calculated for all the manufacturer's engine families participating in the averaging, banking, and trading program.

(b) Based on this information, each manufacturer's certification application must demonstrate:

(1) That at the end of model year production, each engine family has a net emissions credit balance equal to or greater than zero for any pollutant and program for which participation in certification under averaging, banking, and/or trading is being sought. The equation in section § 94.305 shall be used in this calculation for each engine family.

(2) That the manufacturer will obtain sufficient credits to be used to comply with the emission standard for any engine family with an FEL that exceeds the applicable emission standard, or where credits will be applied if the FEL is less than the emission standard. In cases where credits are being obtained, for each engine family involved the manufacturer must identify specifically the source of the credits being used (manufacturer/engine family). All such reports shall include all credits involved in certification averaging, banking, or trading.

(3) That in cases where credits are being generated/supplied, the use of such credits is specifically designated (manufacturer/engine family or reserved). All such reports shall include all credits involved in certification averaging, banking, or trading.

(c) Manufacturers must monitor projected versus actual production throughout the model year to ensure that compliance with emission standards is achieved at the end of the model year.

(d) At the end of the model year, the manufacturer must provide the end-of-year reports required under § 94.309.

(1) Projected credits based on the information supplied in the certification application may be used to obtain a certificate of conformity. However, any such projected credits must be validated based on review of the end of model year reports and may be revoked at a later time based on follow-up audits or any other verification measure deemed appropriate by the Administrator.

(2) Compliance for engine families using averaging, banking, or trading will be determined at the end of the model year. Manufacturers that have

certified engine families with credit balances for THC+NO_X and/or PM that do not equal or exceed zero shall be in violation of the conditions of the certificate of conformity for such engine families. The certificate of conformity may be voided *ab initio* for those engine families.

(e) Other conditions of certification.

(1) All certificates issued are conditional upon compliance by the manufacturer with the provisions of this subpart both during and after the calendar year of production.

(2) Failure to comply with all provisions of this subpart will be considered to be a failure to satisfy the conditions upon which the certificate was issued, and the certificate may be deemed void *ab initio*.

(3) The manufacturer bears the burden of establishing to the satisfaction of the Administrator that the conditions upon which the certificate was issued were satisfied or waived.

§ 94.307 Labeling.

For all engines included in the certification averaging, banking, and trading program, the FEL to which the engine is certified must be included on the label required in § 94.212.

§ 94.308 Maintenance of records.

(a) The manufacturer of any engine that is certified under the averaging, banking, and trading program must establish, maintain, and retain the following adequately organized and indexed records for each such engine produced:

(1) EPA engine family and configuration;

(2) Engine identification number;

(3) Engine calendar year and build date;

(4) Rated power;

(5) Purchaser and destination; and

(6) Assembly plant.

(b) The manufacturer of any engine family that is certified under the averaging, banking, and trading program must establish, maintain, and retain the following adequately organized and indexed records for each such family:

(1) Model year and EPA engine family;

(2) Family Emission Limit(s) (FEL);

(3) Rated power for each configuration;

(4) Projected applicable production/sales volume for the calendar year;

(5) Actual applicable production/sales volume for the calendar year; and

(6) Useful life.

(c) Any manufacturer producing an engine family participating in trading of credits must maintain the following records on a quarterly basis for each engine family in the trading program:

(1) The model year and engine family;

(2) The actual quarterly and cumulative applicable production/sales volume;

(3) The values required to calculate credits as given in § 94.305;

(4) The resulting type and number of credits generated/required;

(5) How and where credit surpluses are dispersed; and

(6) How and through what means credit deficits are met.

(d) The manufacturer must retain all records required to be maintained under this section for a period of 8 years from the due date for the end-of-calendar year report. Records may be retained as hard copy or reduced to microfilm, ADP diskettes, and so forth, depending on the manufacturer's record retention procedure; provided, that in every case all information contained in the hard copy is retained.

(e) Nothing in this section limits the Administrator's discretion in requiring the manufacturer to retain additional records or submit information not specifically required by this section.

(f) Pursuant to a request made by the Administrator, the manufacturer must submit to the Administrator the information that the manufacturer is required to retain.

(g) EPA may void *ab initio* a certificate of conformity for an engine family for which the manufacturer fails to retain the records required in this section or to provide such information to the Administrator upon request.

§ 94.309 Reports.

(a) Manufacturers must submit the certification information as required under § 94.306, and end-of-year reports each year as part of their participation in certification averaging, banking, and trading programs.

(b) Quarterly reports. All entities involved in credit trades must submit quarterly reports. The reports shall include the source or recipient of the credits, the amount of credits involved plus remaining balances, details regarding the pollutant, and model year as well as the information prescribed in § 94.308(c). Copies of contracts related to credit trading must be included or supplied by the buyer, seller, and broker, as applicable.

(c) End-of-year reports must include the information prescribed in § 94.308(b). The report shall include a calculation of credit balances for each family to show that the summation of the manufacturer's use of credits results in a credit balance equal to or greater than zero. The report shall be consistent in detail with the information submitted under § 94.306 and show how credit surpluses were dispersed and how credit shortfalls were met on a family specific basis. The end-of-year report shall incorporate any information reflected in previous quarterly reports.

(d) The applicable production/sales volume for quarterly and end-of-year reports must be based on the location of either the point of first retail sale by the manufacturer or the point at which the engine is placed into service, whichever occurs first. This is called the final product purchase location.

(e) Each quarterly and end-of-year report submitted shall include a statement certifying to the accuracy and authenticity of the material reported therein.

(f) Requirements for submission. (1) Quarterly reports must be submitted within 90 days of the end of the calendar quarter to the Designated Officer.

(2) End-of-year reports must be submitted within 120 days of the end of the calendar year to the Designated Officer.

(3) Failure by a manufacturer participating in the averaging, banking, or trading program to submit any quarterly or end-of-year reports in the specified time for all engines is a violation of sections 203(a)(1) and 213 of the Clean Air Act for each engine.

(4) A manufacturer generating credits for banking only who fails to submit end-of-year reports in the applicable specified time period (120 days after the end of the calendar year) may not use or trade the credits until such reports are received and reviewed by EPA. Use of projected credits pending EPA review is not permitted in these circumstances.

(g) Reporting errors. (1) Errors discovered by EPA or the manufacturer in the end-of-year report, including errors in credit calculation, may be corrected 180-days subsequent to submission of the end-of-year report. Errors discovered by EPA after 180-days shall be correctable if, as a result of the correction, the manufacturer's credits are reduced. Errors in the manufacturer's favor are not corrected if discovered after the 180-day correction period allowed.

(2) If EPA or the manufacturer determines that a reporting error occurred on an end-of-year report previously submitted to EPA under this section, the manufacturer's credits and credit calculations will be recalculated. Erroneous positive credits will be void. Erroneous negative credit balances may be corrected by EPA.

(3) If EPA review of a manufacturer's end-of-year report indicates a credit shortfall, the manufacturer will be permitted to purchase the necessary credits to bring the credit balance to zero. These credits must be supplied at the ratio of 1.1 credits for each 1.0 credit needed. If sufficient credits are not available to bring the credit balance to zero for the family(ies) involved, EPA may void the certificate(s) for that family(ies) *ab initio*. In addition, all engines within an engine family for which there are insufficient credits will be considered to have violated the conditions of the certificate of conformity and therefore are not covered by that certificate.

(4) If within 180 days of receipt of the manufacturer's end-of-year report, EPA review determines a reporting error in the manufacturer's favor (that is, resulting in an increased credit balance) or if the manufacturer discovers such an error within 180 days of EPA receipt of the end-of-year report, the credits are restored for use by the manufacturer.

§ 94.310 Notice of opportunity for hearing.

Any voiding of the certificate under this subpart will be made only after the manufacturer concerned has been offered an opportunity for a hearing conducted in accordance with § 94.216 and, if a manufacturer requests such a hearing, will be made only after an initial decision by the Presiding Officer.

Subpart E—Emission-related Defect Reporting Requirements, Voluntary Emission Recall Program

§ 94.401 Applicability.

The requirements of this subpart are applicable to manufacturers of engines subject to the provisions of Subpart A of this part. The requirement to report emission-related defects affecting a given class or category of engines applies for eight years from the end of the year in which such engines were manufactured.

§ 94.402 Definitions.

The definitions of Subpart A of this part apply to this subpart.

§ 94.403 Emission defect information report.

(a) A manufacturer must file a defect information report whenever it determines, in accordance with procedures it established to identify either safety-related or performance defects (or based on other information), that a specific emission-related defect exists in 25 or more Category 1 marine engines, or 10 or more Category 2 marine engines. No report must be filed under this paragraph for any emission-related defect corrected prior to the sale of the affected engines to an ultimate purchaser. (Note: These limits apply to the occurrence of the same defect, and are not constrained by engine family or model year.)

(b) Defect information reports required under paragraph (a) of this section must be submitted not more than 15 working days after the same emission-related defect is found to effect 25 or more Category 1 marine engines, or 10 or more Category 2 marine engines. Information required by paragraph (c) of this section that is either not available within 15 working days or is significantly revised must be submitted as it becomes available.

(c) Except as provided in paragraph (b) of this section, each defect report must contain the following information in substantially the format outlined:

(1) The manufacturer's corporate name.

(2) A description of the defect.

(3) A description of each class or category of engines potentially affected by the defect including make, model, calendar year produced, purchaser and any other information as may be required to identify the engines affected.

(4) For each class or category of engines described in response to paragraph (c)(3) of this section, the following shall also be provided:

(i) The number of engines known or estimated to have the defect and an explanation of the means by which this number was determined.

(ii) The address of the plant(s) at which the potentially defective engines were produced.

(5) An evaluation of the emissions impact of the defect and a description of any operational or performance problems which a defective engine might exhibit.

(6) Available emissions data which relate to the defect.

(7) An indication of any anticipated follow-up by the manufacturer.

§ 94.404 Voluntary emissions recall reporting.

(a) When any manufacturer initiates a voluntary emissions recall campaign involving an engine, the manufacturer shall submit to EPA a report describing the manufacturer's voluntary emissions recall plan as prescribed by this section within 15 working days of the date owner notification was begun. The report shall contain the following:

(1) A description of each class or category of engines recalled including the number of engines to be recalled, the calendar year if applicable, the make, the model, and such other information as may be required to identify the engines recalled.

(2) A description of the specific modifications, alterations, repairs, corrections, adjustments, or other changes to be made to correct the engines affected by the emission-related defect.

(3) A description of the method by which the manufacturer will notify engine owners.

(4) A description of the proper maintenance or use, if any, upon which the manufacturer conditions eligibility for repair under the remedial plan, an explanation of the manufacturer's reasons for imposing any such condition, and a description of the proof to be required of an engine owner to demonstrate compliance with any such condition.

(5) A description of the procedure to be followed by engine owners to obtain correction of the nonconformity. This shall include designation of the date on or after which the owner can have the nonconformity remedied, the time reasonably necessary to perform the labor to remedy the defect, and the designation of facilities at which the defect can be remedied.

(6) If some or all the nonconforming engines are to be remedied by persons other than authorized warranty agents of the manufacturer, a description of the class of persons other than authorized warranty agents of the manufacturer who will remedy the defect.

(7) A copy of any written notification sent to engine owners.

(8) A description of the system by which the manufacturer will assure that an adequate supply of parts will be available to perform the repair under the remedial plan including the date by which an adequate supply of parts will be available to initiate the repair campaign, the percentage of the total parts requirement of each person who is to perform the repair under the remedial plan to be shipped to initiate the campaign, and the method to be used to assure the supply remains both adequate and responsive to owner demand.

(9) Three copies of all necessary instructions to be sent to those persons who are to perform the repair under the remedial plan.

(10) A description of the impact of the changes on fuel consumption, operation or performance, and safety of each class or category of engines to be recalled.

(11) A sample of any label to be applied to engines which participate in the voluntary recall campaign.

(b) Unless otherwise specified by the Administrator, the manufacturer shall report on the progress of the recall campaign by submitting subsequent reports for six consecutive quarters, or until proven that remedial action has been adequately taken on all affected engines, whichever occurs first, commencing with the quarter after the voluntary emissions recall campaign actually begins. Such reports shall be submitted no later than 25 working days after the close of each calendar quarter. For each class or group of engine subject to the voluntary emissions recall campaign, the quarterly report shall contain the:

(1) Emission recall campaign number, if any, designated by the manufacturer.

(2) Date owner notification was begun, and date completed.

(3) Number of engines involved in the voluntary emissions recall campaign.

(4) Number of engines known or estimated to be affected by the emission-related defect and an explanation of the means by which this number was determined.

(5) Number of engines inspected pursuant to voluntary emission recall plan.

(6) Number of inspected engines found to be affected by the emissions-related defect.

(7) Number of engines actually receiving repair under the remedial plan.

(8) Number of engines determined to be unavailable for inspection or repair under the remedial plan due to exportation, scrappage, or for other reasons (specify).

(9) Number of engines determined to be ineligible for remedial action due to a failure to properly maintain or use such engines.

(10) Three copies of any service bulletins which relate to the defect to be corrected and which have not previously been reported.

(11) Three copies of all communications transmitted to engine owners which relate to the defect to be corrected and which have not previously been submitted.

(c) If the manufacturer determines that any of the information requested in paragraph (b) of this section has changed or was incorrect, revised information and an explanatory note shall be submitted. Answers to paragraphs (b)(5), (6), (7), (8), and (9) of this section shall be cumulative totals.

(d) The manufacturer shall maintain in a form suitable for inspection, such as computer information storage devices or card files, the names and addresses of engine owners:

(1) To whom notification was given;

(2) Who received remedial repair or inspection under the remedial plan; and

(3) Who were determined not to qualify for such remedial action when eligibility is conditioned on proper maintenance or use.

(e) The records described in paragraph (d) of this section shall be made available to the Administrator upon request.

§ 94.405 Alternative report formats.

(a) Any manufacturer may submit a plan for making either of the reports required by §§ 94.403 and 94.404 on computer diskettes, magnetic tape or other machine readable format. The plan shall be accompanied by sufficient technical detail to allow a determination that data requirements of these sections will be met and that the data in such format will be usable by EPA.

(b) Upon approval by the Administrator of the reporting system, the manufacturer may use such system until otherwise notified by the Administrator.

§ 94.406 Reports filing: record retention.

(a) The reports required by §§ 94.403 and 94.404 shall be sent to the Designated Officer.

(b) The information gathered by the manufacturer to compile the reports required by §§ 94.403 and 94.404 shall be retained for not less than 8 years from the date of the manufacture of the engines and shall be made available to duly authorized officials of the EPA upon request.

§ 94.407 Responsibility under other legal provisions preserved.

The filing of any report under the provisions of this subpart shall not affect a manufacturer's responsibility to file reports or applications, obtain approval, or give notice under any provision of law.

§ 94.408 Disclaimer of production warranty applicability.

(a) The act of filing an Emission Defect Information Report pursuant to § 94.403 is inconclusive as to the existence of a defect subject to the warranty provided by section 207(a) of the Act.

(b) A manufacturer may include on each page of its Emission Defect Information Report a disclaimer stating that the filing of a Defect Information Report pursuant to this subpart is not conclusive as to the applicability of the Production Warranty provided by section 207(a) of the Act.

Subpart F—Manufacturer Production Line Testing Programs

§ 94.501 Applicability.

(a) The requirements of this subpart are applicable to manufacturers of engines subject to the provisions of Subpart A of this part.

(b) The provisions of Subpart F of 40 CFR Part 89 (Selective Enforcement Audit) apply to engines subject to the provisions of Subpart A of this part.

§ 94.502 Definitions.

The definitions in Subpart A of this part apply to this subpart.

§ 94.503 General requirements.

(a) Manufacturers shall test production line engines in accordance with sampling procedures specified in § 94.505 and the test procedures specified in § 94.506.

(b) Upon request, the Administrator may also allow manufacturers to conduct alternate production line testing programs, provided the Administrator determines that the alternate production line testing program provides equivalent assurance that the engines that are being produced conform to the provisions of this part. As part of this

allowance or for other reasons, the Administrator may waive some or all of the requirements of this subpart.

(c) The requirements of this subpart apply with respect to all applicable standards and FELs of Subpart A of this part, including the supplemental standards of § 94.8(e).

§ 94.504 Right of entry and access.

(a) To allow the Administrator to determine whether a manufacturer is complying with the provisions of this part, one or more EPA enforcement officers may enter during operating hours and upon presentation of credentials any of the following places:

(1) Any facility, including ports of entry, where any engine is to be introduced into commerce or any emission-related component is manufactured, assembled, or stored;

(2) Any facility where any test conducted pursuant to a manufacturer's production line testing program or any procedure or activity connected with such test is or was performed;

(3) Any facility where any test engine is present; and

(4) Any facility where any record required under § 94.509 or other document relating to this subpart is located.

(b) Upon admission to any facility referred to in paragraph (a) of this section, EPA enforcement officers are authorized to perform the following inspection-related activities:

(1) To inspect and monitor any aspect of engine manufacture, assembly, storage, testing and other procedures, and to inspect and monitor the facilities in which these procedures are conducted;

(2) To inspect and monitor any aspect of engine test procedures or activities, including test engine selection, preparation and service accumulation, emission duty cycles, and maintenance and verification of test equipment calibration;

(3) To inspect and make copies of any records or documents related to the assembly, storage, selection, and testing of a engine; and

(4) To inspect and photograph any part or aspect of any engine and any component used in the assembly thereof that is reasonably related to the purpose of the entry.

(c) EPA enforcement officers are authorized to obtain reasonable assistance without cost from those in charge of a facility to help the officers perform any function listed in this subpart and they are authorized to request the manufacturer to make arrangements with those in charge of a facility operated for the manufacturer benefit to furnish reasonable assistance without cost to EPA.

(1) Reasonable assistance includes, but is not limited to, clerical, copying, interpretation and translation services; the making available on an EPA enforcement officer's request of personnel of the facility being inspected during their working hours to inform the EPA enforcement officer of how the facility operates and to answer the officer's questions; and the performance on request of emission tests on any engine which is being, has been, or will be used for production line testing.

(2) By written request, signed by the Assistant Administrator for Air and Radiation or the Assistant Administrator for Enforcement and Compliance Assurance, and served on the manufacturer, a manufacturer may be compelled to cause the personal appearance of any employee at such a facility before an EPA enforcement officer. Any such employee who has been instructed by the manufacturer to appear will be entitled to be accompanied, represented, and advised by counsel.

(d) EPA enforcement officers are authorized to seek a warrant or court order authorizing the EPA enforcement officers to conduct the activities authorized in this section, as appropriate, to execute the functions specified in this section. EPA enforcement officers may proceed *ex parte* to obtain a warrant or court order whether or not the EPA enforcement officers first attempted to seek permission from the manufacturer or the party in charge of the facility(ies) in question to conduct the activities authorized in this section.

(e) A manufacturer is responsible for locating its foreign testing and manufacturing facilities in jurisdictions where local law does not prohibit an EPA enforcement officer(s) from conducting the activities specified in this section. EPA will not attempt to make

any inspections which it has been informed local foreign law prohibits.

§ 94.505 Sample selection for testing.

(a) At the start of each model year, the manufacturer will begin to select engines from each engine family for production line testing. Each engine will be selected from the end of the production line. Testing shall be performed throughout the entire model year to the extent possible. Engines selected shall cover the broadest range of production possible.

(1)(i) The required sample size for Category 1 engine manufacturers is one percent of projected annual U.S.-directed production for all Category 1 engine families, provided that no engine tested fails to meet applicable emission standards. Test engines shall include a proportional sample from each engine family. The required sample size is zero if a manufacturer's projected annual production for all Category 1 engine families is less than 100.

(ii) The required sample size for a Category 2 engine family is one percent of projected annual U.S.-directed production for that engine family, with a minimum sample size of one test per model year provided that no engine tested fails to meet applicable emission standards.

(2) Manufacturers may elect to test additional engines. All additional engines must be tested in accordance with the applicable test procedures of this part.

(3) The Administrator may reject any engines selected by the manufacturer if he/she determines that such engines are not representative of actual production.

(b) The manufacturer must assemble the test engines using the same mass production process that will be used for engines to be introduced into commerce.

(c) No quality control, testing, or assembly procedures will be used on any test engine or any portion thereof, including parts and subassemblies, that have not been or will not be used during the production and assembly of all other engines of that family, except with the approval of the Administrator.

§ 94.506 Test procedures.

(a)(1) For engines subject to the provisions of this subpart, the prescribed test procedures are those procedures described in Subpart B of this part, except as provided in this section.

(2) The Administrator may, on the basis of a written application by a manufacturer, prescribe test procedures other than those specified in paragraph (a)(1) of this section for any engine he/she determines is not susceptible to satisfactory testing using procedures specified in paragraph (a)(1) of this section.

(3) If test procedures other than those in Subpart B of this part were used in certification of the engine family being tested under this subpart (other than alternate test procedures necessary for testing of a development engine instead of a low hour engine under § 94.9), the manufacturer shall use the test procedures used in certification for production line testing.

(b)(1) The manufacturer may not adjust, repair, prepare, modify, or perform any emission test on any test engine unless this adjustment, repair, preparation, modification and/or test is documented in the manufacturer's engine assembly and inspection procedures and is actually performed by the manufacturer or unless this adjustment, repair, preparation, modification and/or test is required or permitted under this subpart or is approved in advance by the Administrator.

(2) Any adjustable engine parameter must be set to values or positions that are within the range specified in the approved application for certification.

(3) The Administrator may adjust or require to be adjusted any engine parameter which the Administrator has determined to be subject to adjustment for certification and production line testing, to any setting within the specified adjustable range of that parameter, as determined by the Administrator, prior to the performance of any test.

(c) Service Accumulation/Green Engine Factor. The manufacturer shall accumulate up to 300 hours of service on the engines to be tested. In lieu of conducting such service accumulation, the manufacturer may establish a Green Engine Factor for each regulated

pollutant for each engine family to be used in calculating emissions test results. The manufacturer shall obtain the approval of the Administrator prior to using a Green Engine Factor.

(d) The manufacturer may not perform any maintenance on test engines after selection for testing.

(e) If an engine is shipped to a facility other than the production facility for production line testing, and an adjustment or repair is necessary because of such shipment, the engine manufacturer must perform the necessary adjustment or repair only after the initial test of the engine, except where the Administrator has determined that the test would be impossible to perform or would permanently damage the engine.

(f) If an engine cannot complete the service accumulation or an emission test, because of a malfunction, the manufacturer may request that the Administrator authorize either the repair of that engine or its deletion from the test sequence.

(g) *Retesting*. If an engine manufacturer determines that any production line emission test of an engine is invalid, the engine must be retested in accordance with the requirements of this subpart. Emission results from all tests must be reported to EPA, including test results the manufacturer determines are invalid. The engine manufacturer must also include a detailed explanation of the reasons for invalidating any test in the quarterly report required in § 94.508(e). In the event a retest is performed, a request may be made to the Administrator, within ten days of the end of the production quarter, for permission to substitute the after-repair test results for the original test results. The Administrator will either affirm or deny the request by the engine manufacturer within ten working days from receipt of the request.

§ 94.507 Sequence of testing.

(a) If one or more engines fail a production line test, then the manufacturer must test two additional engines for each engine that fails.

(b) The two additional engines tested under paragraph (a) of this section shall be selected from either the next fifteen produced in that engine family, or from those engines produced in that engine family within 48 hours of the completion of the failed test.

§ 94.508 Calculation and reporting of test results.

(a) Manufacturers shall calculate initial test results using the applicable test procedure specified in § 94.506(a). These results must also include the Green Engine Factor, if applicable. The manufacturer shall round these results, in accordance with ASTM E 29–93a (incorporated by reference at § 94.5), to the number of decimal places contained in the applicable emission standard expressed to one additional significant figure.

(b) Test results shall be calculated by summing the initial test results derived in paragraph (a) of this section for each test engine, dividing by the number of tests conducted on the engine, and rounding in accordance with ASTM E 29–93a (incorporated by reference at § 94.5) to the same number of decimal places contained in the applicable standard expressed to one additional decimal place. (For example, if the applicable standard is 7.8, then round the test results to two places to the right of the decimal.)

(c) Manufacturers shall calculate the final test results for each test engine by applying the appropriate deterioration factors, derived in the certification process for the engine family, to the test results described in paragraph (b) of this section, and rounding in accordance with ASTM E 29–93a (incorporated by reference at § 94.5) to the same number of decimal places contained in the applicable standard expressed to one additional decimal place. (For example, if the applicable standard is 7.8, then round the test results to two places to the right of the decimal.)

(d) If, subsequent to an initial failure of a production line test, the average of the test results for the failed engine and the two additional engines tested, is greater than any applicable emission standard or FEL, the engine family is deemed to be in non-compliance with applicable emission standards, and the manufacturer must notify the Administrator within 2 working days of such noncompliance.

(e) Within 30 calendar days of the end of each quarter, each manufacturer must submit to the Administrator a report which includes the following information:

(1) The location and description of the manufacturer's emission test facilities which were utilized to conduct testing reported pursuant to this section;

(2) Total production and sample size for each engine family;

(3) The applicable standards and/or FELs against which each engine family was tested;

(4) A description of the test engines;

(5) For each test conducted:

(i) A description of the test engine, including:

(A) Configuration and engine family identification;

(B) Year, make, and build date;

(C) Engine identification number;

(D) Number of hours of service accumulated on engine prior to testing; and

(E) Description of Green Engine Factor; how it is determined and how it is applied;

(ii) Location(s) where service accumulation was conducted and description of accumulation procedure and schedule, if applicable;

(iii) Test number, date, test procedure used, initial test results before and after rounding, and final test results for all production line emission tests conducted, whether valid or invalid, and the reason for invalidation of any test results, if applicable;

(iv) A complete description of any adjustment, modification, repair, preparation, maintenance, and testing which was performed on the test engine, has not been reported pursuant to any other paragraph of this subpart, and will not be performed on other production engines;

(v) Any other information the Administrator may request relevant to the determination whether the new engines being manufactured by the manufacturer do in fact conform with the regulations with respect to which the certificate of conformity was issued;

(6) For each failed engine as defined in § 94.510(a), a description of the remedy and test results for all retests as required by § 94.512(g);

(7) The date of the end of the engine manufacturer's model year production for each engine family tested; and

(8) The following signed statement and endorsement by an authorized representative of the manufacturer:

This report is submitted pursuant to Sections 213 and 208 of the Clean Air Act. This production line testing program was conducted in complete conformance with all applicable regulations under 40 CFR part 94. No emission-related changes to production processes or quality control procedures for the engine family tested have been made during this production line testing program that affect engines from the production line. All data and information reported herein is, to the best of (Company Name) knowledge, true and accurate. I am aware of the penalties associated with violations of the Clean Air Act and the regulations thereunder.
(Authorized Company Representative.)

§ 94.509 Maintenance of records; submittal of information.

(a) The manufacturer for any new engine subject to any of the provisions of this subpart must establish, maintain, and retain the following adequately organized and indexed records:

(1) General records. A description of all equipment used to test engines in accordance with § 94.503. The equipment requirements in Subpart B of this part apply to tests performed under this subpart.

(2) Individual records. These records pertain to each production line test conducted pursuant to this subpart and include:

(i) The date, time, and location of each test;

(ii) The method by which the Green Engine Factor was calculated or the number of hours of service accumulated on the test engine when the test began and ended;

(iii) The names of all supervisory personnel involved in the conduct of the production line test;

(iv) A record and description of any adjustment, repair, preparation or modification performed on test engines, giving the date, associated time, justification, name(s) of the authorizing personnel, and names of all supervisory personnel responsible for the conduct of the action;

(v) If applicable, the date the engine was shipped from the assembly plant,

associated storage facility or port facility, and the date the engine was received at the testing facility;

(vi) A complete record of all emission tests performed pursuant to this subpart (except tests performed directly by EPA), including all individual worksheets and/or other documentation relating to each test, or exact copies thereof, in accordance with the record requirements specified in Subpart B of this part;

(vii) A brief description of any significant events during testing not otherwise described under this paragraph (a)(2) of this section, commencing with the test engine selection process and including such extraordinary events as engine damage during shipment.

(3) The manufacturer must establish, maintain and retain general records, pursuant to paragraph (a)(1) of this section, for each test cell that can be used to perform emission testing under this subpart.

(b) The manufacturer must retain all records required to be maintained under this subpart for a period of eight (8) years after completion of all testing. Records may be retained as hard copy (i.e., on paper) or reduced to microfilm, floppy disk, or some other method of data storage, depending upon the manufacturer's record retention procedure; provided, that in every case, all the information contained in the hard copy is retained.

(c) The manufacturer must, upon request by the Administrator, submit the following information with regard to engine production:

(1) Projected production for each configuration within each engine family for which certification has been requested and/or approved.

(2) Number of engines, by configuration and assembly plant, scheduled for production.

(d) Nothing in this section limits the Administrator's discretion to require a manufacturer to establish, maintain, retain or submit to EPA information not specified by this section.

(e) All reports, submissions, notifications, and requests for approval made under this subpart must be addressed to the Designated Officer.

(f) The manufacturer must electronically submit the results of its production line testing using an EPA information format.

§ 94.510 Compliance with criteria for production line testing.

(a) A failed engine is one whose final test results pursuant to § 94.508(c), for one or more of the applicable pollutants, exceed an applicable emission standard or FEL.

(b) An engine family is deemed to be in noncompliance, for purposes of this subpart, if at any time throughout the model year, the average of an initial failed engine and the two additional engines tested, is greater than any applicable emission standard or FEL.

§ 94.511 [Reserved]

§ 94.512 Suspension and revocation of certificates of conformity.

(a) The certificate of conformity is suspended with respect to any engine that fails a production line test pursuant to § 94.510(a), effective from the time the testing of that engine is completed.

(b) The Administrator may suspend the certificate of conformity for an engine family which is in noncompliance pursuant to § 94.510(b), thirty days after the engine family is deemed to be in noncompliance.

(c) If the results of testing pursuant to this subpart indicate that engines of a particular family produced at one plant of a manufacturer do not conform to the regulations with respect to which the certificate of conformity was issued, the Administrator may suspend the certificate of conformity with respect to that family for engines manufactured by the manufacturer at all other plants.

(d) The Administrator may suspend a certificate of conformity for any engine family in whole or in part if:

(1) The manufacturer fails to comply with any of the requirements of this subpart.

(2) The manufacturer submits false or incomplete information in any report or information provided to the Administrator under this subpart.

(3) The manufacturer renders inaccurate any test data submitted under this subpart.

(4) An EPA enforcement officer is denied the opportunity to conduct activities authorized in this subpart.

(5) An EPA enforcement officer is unable to conduct activities authorized in § 94.504 for any reason.

(e) The Administrator shall notify the manufacturer in writing of any suspension or revocation of a certificate of conformity in whole or in part; a suspension or revocation is effective upon receipt of such notification or thirty days from the time an engine family is deemed to be in noncompliance under §§ 94.508(d), 94.510(a), or 94.510(b), whichever is earlier, except that the certificate is immediately suspended with respect to any failed engines as provided for in paragraph (a) of this section.

(f) The Administrator may revoke a certificate of conformity for an engine family when the certificate has been suspended pursuant to paragraph (b) or (c) of this section if the remedy is one requiring a design change or changes to the engine and/or emission control system as described in the application for certification of the affected engine family.

(g) Once a certificate has been suspended for a failed engine, as provided for in paragraph (a) of this section, the manufacturer must take the following actions before the certificate is reinstated for that failed engine:

(1) Remedy the nonconformity;

(2) Demonstrate that the engine conforms to applicable standards or family emission limits by retesting if applicable, the engine in accordance with this part; and

(3) Submit a written report to the Administrator, after successful completion of testing on the failed engine, which contains a description of the remedy and test results for each engine in addition to other information that may be required by this part.

(h) Once a certificate for a failed engine family has been suspended pursuant to paragraph (b) or (c) of this section, the manufacturer must take the following actions before the Administrator will consider reinstating the certificate:

(1) Submit a written report to the Administrator which identifies the reason for the noncompliance of the engines, describes the remedy, including a description of any quality control and/or quality assurance measures to be taken by the manufacturer to prevent future occurrences of the problem, and states the date on which the remedies will be implemented.

(2) Demonstrate that the engine family for which the certificate of conformity has been suspended does in fact comply with the regulations of this part by testing engines selected from normal production runs of that engine family. Such testing must comply with the provisions of this subpart. If the manufacturer elects to continue testing individual engines after suspension of a certificate, the certificate is reinstated for any engine actually determined to be in conformance with the applicable standards or family emission limits through testing in accordance with the applicable test procedures, provided that the Administrator has not revoked the certificate pursuant to paragraph (f) of this section.

(i) Once the certificate has been revoked for an engine family, if the manufacturer desires to continue introduction into commerce of a modified version of that family, the following actions must be taken before the Administrator may issue a certificate for that modified family:

(1) If the Administrator determines that the change(s) in engine design may have an effect on emission performance deterioration, the Administrator shall notify the manufacturer, within five working days after receipt of the report in paragraph (h)(1) of this section, whether subsequent testing under this subpart will be sufficient to evaluate the change or changes or whether additional testing will be required; and

(2) After implementing the change or changes intended to remedy the nonconformity, the manufacturer must demonstrate that the modified engine family does in fact conform with the regulations of this part by testing engines selected from normal production runs of that engine family. When both of these requirements are met, the Administrator shall reissue the certificate or issue a new certificate, as the case may be, to include that family. If this subsequent testing reveals failing data the revocation remains in effect.

(j) At any time subsequent to an initial suspension of a certificate of conformity for a test engine pursuant to paragraph (a) of this section, but not later than 30 days (or such other period as may be allowed by the Administrator) after notification of the Administrator's decision to suspend or revoke a certificate of conformity in whole or in part pursuant to paragraph (b), (c), or (f) of this section, a manufacturer may request a hearing as to whether the tests have been properly conducted or any sampling methods have been properly applied.

(k) Any suspension of a certificate of conformity under paragraphs (a),(b),(c) and (d) of this section:

(1) Shall be made only after the manufacturer concerned has been offered an opportunity for a hearing conducted in accordance with §§ 94.513, 94.514, and 94.515; and

(2) Need not apply to engines no longer in the possession of the manufacturer.

(l) After the Administrator suspends or revokes a certificate of conformity pursuant to this section or voids a certificate of conformity under paragraph § 94.215, and prior to the commencement of a hearing under § 94.513, if the manufacturer demonstrates to the Administrator's satisfaction that the decision to suspend, revoke, or void the certificate was based on erroneous information, the Administrator shall reinstate the certificate.

(m) To permit a manufacturer to avoid storing non-test engines while conducting subsequent testing of the noncomplying family, a manufacturer may request that the Administrator conditionally reinstate the certificate for that family. The Administrator may reinstate the certificate subject to the following condition: the manufacturer must commit to recall all engines of that family produced from the time the certificate is conditionally reinstated if the family fails subsequent testing and must commit to remedy any nonconformity at no expense to the owner.

§ 94.513 Request for public hearing.

(a) If the manufacturer disagrees with the Administrator's decision to suspend or revoke a certificate or disputes the basis for an automatic suspension pursuant to § 94.512(a), the manufacturer may request a public hearing.

(b) The manufacturer's request shall be filed with the Administrator not later than 30 days after the Administrator's notification of his or her decision to suspend or revoke, unless otherwise specified by the Administrator. The manufacturer shall simultaneously serve two copies of this request upon the Designated Officer and file two copies with the Hearing Clerk of the Agency. Failure of the manufacturer to request a hearing within the time provided constitutes a waiver of the right to a hearing. Subsequent to the expiration of the period for requesting a hearing as of right, the Administrator may, in his or her discretion and for good cause shown, grant the manufacturer a hearing to contest the suspension or revocation.

(c) A manufacturer shall include in the request for a public hearing:

(1) A statement as to which configuration(s) within a family is to be the subject of the hearing;

(2) A concise statement of the issues to be raised by the manufacturer at the hearing, except that in the case of the hearing requested under § 94.512(j), the hearing is restricted to the following issues:

(i) Whether tests have been properly conducted (specifically, whether the tests were conducted in accordance with applicable regulations under this part and whether test equipment was properly calibrated and functioning);

(ii) Whether there exists a basis for distinguishing engines produced at plants other than the one from which engines were selected for testing which would invalidate the Administrator's decision under § 94.512(c));

(3) A statement specifying reasons why the manufacturer believes it will prevail on the merits of each of the issues raised; and

(4) A summary of the evidence which supports the manufacturer's position on each of the issues raised.

(d) A copy of all requests for public hearings will be kept on file in the Office of the Hearing Clerk and will be made available to the public during Agency business hours.

§ 94.514 Administrative procedures for public hearing.

(a) The Presiding Officer shall be an Administrative Law Judge appointed pursuant to 5 U.S.C. 3105 (see also 5 CFR part 930).

(b) The Judicial Officer shall be an officer or employee of the Agency appointed as a Judicial Officer by the Administrator, pursuant to this section, who shall meet the qualifications and perform functions as follows:

(1) *Qualifications.* A Judicial Officer may be a permanent or temporary employee of the Agency who performs other duties for the Agency. The Judicial Officer shall not be employed by the Office of Enforcement or have any connection with the preparation or presentation of evidence for a hearing held pursuant to this subpart. The Judicial Officer shall be a graduate of an accredited law school and a member in good standing of a recognized Bar Association of any state or the District of Columbia.

(2) *Functions.* The Administrator may consult with the Judicial Officer or delegate all or part of the Administrator's authority to act in a given case under this section to a Judicial Officer, provided that this delegation does not preclude the Judicial Officer from referring any motion or case to the Administrator when the Judicial Officer determines such referral to be appropriate.

(c) For the purposes of this section, one or more Judicial Officers may be designated by the Administrator. As work requires, a Judicial Officer may be designated to act for the purposes of a particular case.

(d)(1) In the case of a hearing requested under § 94.512(j), when it clearly appears from the data and other information contained in the request for a hearing that no genuine and substantial question of fact or law exists with respect to the issues specified in § 94.513(c)(2), the Administrator may enter an order denying the request for a hearing and reaffirming the original decision to suspend or revoke a certificate of conformity.

(2) In the case of a hearing requested under § 94.513 to challenge a suspension of a certificate of conformity for the reason(s) specified in § 94.512(d), when it clearly appears from the data and other information contained in the request for the hearing that no genuine and substantial question of fact or law exists with respect to the issue of whether the refusal to comply with this subpart was caused by conditions and circumstances outside the control of the manufacturer, the Administrator may enter an order denying the request for a hearing and suspending the certificate of conformity.

(3) Any order issued under paragraph (d)(1) or (d)(2) of this section has the force and effect of a final decision of the Administrator, as issued pursuant to § 94.516.

(4) If the Administrator determines that a genuine and substantial question of fact or law does exist with respect to any of the issues referred to in paragraphs (d)(1) and (d)(2) of this section, the Administrator shall grant the request for a hearing and publish a notice of public hearing in the FEDERAL REGISTER or by such other means as the Administrator finds appropriate to provide notice to the public.

(e) *Filing and service.* (1) An original and two copies of all documents or papers required or permitted to be filed pursuant to this section and § 94.513(c) must be filed with the Hearing Clerk of the Agency. Filing is considered timely if mailed, as determined by the postmark, to the Hearing Clerk within the time allowed by this section and § 94.513(b). If filing is to be accomplished by mailing, the documents must be sent to the address set forth in the notice of public hearing referred to in paragraph (d)(4) of this section.

(2) To the maximum extent possible, testimony will be presented in written form. Copies of written testimony will be served upon all parties as soon as practicable prior to the start of the hearing. A certificate of service will be provided on or accompany each document or paper filed with the Hearing Clerk. Documents to be served upon the Director of the Engine Programs and Compliance Division must be sent by registered mail to: Director, Engine Programs and Compliance Division 6403–J, U.S. Environmental Protection Agency, 401 M St. SW., Washington, DC 20460. Service by registered mail is complete upon mailing.

(f) *Computation of time.* (1) In computing any period of time prescribed or allowed by this section, except as otherwise provided, the day of the act or event from which the designated period of time begins to run is not included. Saturdays, Sundays, and federal legal holidays are included in computing the period allowed for the filing of any document or paper, except that when the period expires on a Saturday, Sunday, or federal legal holiday, the period is extended to include the next following business day.

(2) A prescribed period of time within which a party is required or permitted to do an act is computed from the time of service, except that when service is accomplished by mail, three days will be added to the prescribed period.

(g) *Consolidation.* The Administrator or the Presiding Officer in his or her discretion may consolidate two or more proceedings to be held under this section for the purpose of resolving one or more issues whenever it appears that consolidation will expedite or simplify consideration of these issues. Consolidation does not affect the right of any party to raise issues that could have been raised if consolidation had not occurred.

(h) *Hearing date.* To the extent possible hearings under § 94.513 will be scheduled to commence within 14 days of receipt of the request for a hearing.

§ 94.515 Hearing procedures.

The procedures provided in 40 CFR 86.1014–84(i) through (s) apply for hearings requested pursuant to § 94.513 regarding suspension, revocation, or voiding of a certificate of conformity.

§ 94.516 Appeal of hearing decision.

The procedures provided in 40 CFR 86.1014–84 (t) through (aa) apply for appeals filed with respect to hearings held pursuant to § 94.515.

§ 94.517 Treatment of confidential information.

Except for information required by § 94.508(e)(2) and quarterly emission test results described in § 94.508(e), information submitted pursuant to this subpart shall be made available to the public by EPA, notwithstanding any claim of confidentiality made by the submitter. The provisions for treatment of confidential information described in § 94.4 apply to the information required by § 94.508(e)(2) and quarterly emission test results described in § 94.508(e).

Subpart G—[Reserved]

Subpart H—Recall Regulations

§ 94.701 Applicability.

The requirements of this subpart are applicable to all engines subject to the provisions of this part.

§ 94.702 Definitions.

The definitions in Subpart A of this part apply to this subpart.

§ 94.703 Applicability of 40 CFR part 85, subpart S.

(a) Engines subject to provisions of this part are subject to recall regulations specified in 40 CFR part 85, subpart S, except for the items set forth in this section.

(b) In 40 CFR 85.1801, section 216 of the Clean Air Act applies, rather than section 214 of the Act.

(c) In 40 CFR 85.1802(a), section 213 of the Act applies, rather than section 202 of the Act.

(d) In 40 CFR 85.1803(a) and 85.1805(a)(1) the reference to ''family emission limits'' as defined in this part 94 promulgated under section 213 of the Act applies, rather than the reference to ''family particulate emission limits as defined in 40 CFR part 86 promulgated under section 202 of the Act''.

(e) Throughout the subpart references to ''engines'' apply rather than references to ''vehicles or engines''.

Subpart I—Importation of Nonconforming Engines

§ 94.801 Applicability.

(a) Except where otherwise indicated, this subpart is applicable to importers of engines (and vessels containing engines) for which the Administrator has promulgated regulations under this part prescribing emission standards, that are offered for importation or imported into the United States, but

which engines, at the time of importation or being offered for importation, are not covered by certificates of conformity issued under section 213 and section 206(a) of the Clean Air Act (that is, which are nonconforming engines as defined in § 94.2), and this part. Compliance with regulations under this subpart does not relieve any person or entity from compliance with other applicable provisions of the Clean Air Act.

(b) Regulations prescribing further procedures for the importation of engines into the Customs territory of the United States, as defined in 19 U.S.C. 1202, are set forth in U.S. Customs Service regulations (19 CFR Chapter I).

§ 94.802 Definitions.

The definitions of Subpart A of this part apply to this subpart.

§ 94.803 Admission.

(a) A nonconforming engine offered for importation may be admitted into the United States pursuant to the provisions of this subpart. Subpart C of this part, including § 94.222, describes how to certify engines installed on vessels before they are imported.

(b) To obtain admission, the importer must submit to the Administrator a written request for approval containing the following:

(1) Identification of the importer of the engine and the importer's address, telephone number, and taxpayer identification number;

(2) Identification of the engine's owner, the owner's address, telephone number, and taxpayer identification number;

(3) Identification of the engine including make, model, identification number, and original production year;

(4) Information indicating the provision in this subpart under which the engine is to be imported, including a demonstration of how it qualifies for the requested exemption;

(5) Identification of the place(s) where the engine is to be stored until EPA approval of the importer's application to the Administrator for final admission;

(6) Authorization for EPA enforcement officers to conduct inspections or testing otherwise permitted by the Act or regulations thereunder; and

(7) Such other information as is deemed necessary by the Administrator.

§ 94.804 Exemptions.

(a) *General provisions.* (1) Unless otherwise specified, any person may apply for the exemptions allowed by this section.

(2) Paragraph (b) of this section describes the provisions that apply to temporary exemptions. Paragraph (c) of this section describes provisions that apply to permanent exemptions.

(3) Applications for exemption under this section shall be mailed to the Designated Officer.

(b) Notwithstanding other requirements of this subpart, a nonconforming engine that qualifies for a temporary exemption under this paragraph (b) may be conditionally admitted into the United States if prior written approval for the conditional admission is obtained from the Administrator. Conditional admission is to be under bond. The Administrator may request that the U.S. Customs Service require a specific bond amount to ensure compliance with the requirements of the Act and this subpart. A written request for a temporary exemption from the Administrator shall contain the information required in § 94.803. Noncompliance with the provisions of this paragraph (b) will be considered unlawful importation and may result in the forfeiture of the total amount of the bond, exportation of the engine, and/or imposition of civil penalties.

(1) *Exemption for repairs or alterations.* A person may conditionally import under bond a nonconforming engine solely for purpose of repair(s) or alteration(s). The engine may not be operated in the United States other than for the sole purpose of repair or alteration or shipment to the point of repair or alteration and to the port of export. It may not be sold or leased in the United States and is to be exported upon completion of the repair(s) or alteration(s).

(2) *Testing exemption.* A person may conditionally import under bond a nonconforming engine for testing, subject to the requirements of § 94.905. A test

engine may be operated in the United States provided that the operation is an integral part of the test. This exemption is limited to a period not exceeding one year from the date of importation unless a request is made by the appropriate importer, and subsequently granted by EPA, concerning the engine in accordance with § 94.905 for a subsequent one-year period.

(3) *Display exemptions.* A person may conditionally import under bond a nonconforming engine solely for display purposes, subject to both of the following requirements:

(i) A display engine may be imported by any person for purposes related to a business or the public interest. Such purposes do not include collections normally inaccessible or unavailable to the public on a daily basis, display of an engine at a dealership, private use, or other purpose that the Administrator determines is not appropriate for display exemptions. A display engine may not be sold or leased in the United States and may not be operated in the United States except for the operation incident and necessary to the display purpose.

(ii) A display exemption is granted for 12 months or for the duration of the display purpose, whichever is shorter. Extensions of up to 12 months each are available upon approval by the Administrator. In no circumstances, however, may the total period of exemption exceed 36 months.

(c) A nonconforming engine that qualifies for a permanent exemption under this paragraph (c) may be admitted into the United States if prior written approval is obtained from the Administrator. A written request for a permanent exemption from the Administrator shall contain the information required in § 94.803. Noncompliance with the provisions of this paragraph (c) will be considered unlawful importation and may result in the exportation of the engine and/or imposition of civil penalties.

(1) *National security exemption.* Notwithstanding any other requirement of this subpart, an engine may be permanently imported into the United States under the national security exemption found in § 94.908.

(2) *Competition exemption.* Notwithstanding any other requirement of this subpart, an engine may be permanently imported into the United States under the competition exemption found in § 94.906(c).

(3) *Incomplete marine engine exemption.* An engine that is intended to be modified prior to being placed into service as a marine engine may be imported in a nonconforming configuration, subject to the following provisions:

(i) The modified engine must be covered by a valid marine engine certificate issued under this part prior to importation and held by a post-manufacture marinizer. (Note: Prior to certification, manufacturers and post-manufacture marinizers may import uncertified engines for testing, as specified in paragraph (b)(2) of this section.)

(ii) The engine may not be placed into non-marine service prior to being installed in a vessel.

(iii) The importer must obtain written approval from the Administrator prior to admission.

(iv) The engine and engine container must be labeled as specified by the Administrator.

(v) A manufacturer importing an engine under this exemption must modify the engine to comply with the requirements of this part.

§ 94.805 Prohibited acts; penalties.

(a) The importation of an engine (including an engine incorporated in an imported marine vessel) which is not covered by a certificate of conformity other than in accordance with this subpart and the entry regulations of the U.S. Customs Service is prohibited. Failure to comply with this section is a violation of section 213(d) and section 203 of the Act.

(b) Unless otherwise permitted by this subpart, during a period of conditional admission, the importer of an engine may not:

(1) Operate the engine in the United States; or

(2) Sell or lease or offer the engine for sale or lease.

(c) An engine conditionally admitted pursuant to § 94.804 and not otherwise permanently exempted or excluded by

the end of the period of conditional admission, or within such additional time as the Administrator and the U.S. Customs Service may allow, is deemed to be unlawfully imported into the United States in violation of section 213(d) and section 203 of the Act, unless the engine has been delivered to the U.S. Customs Service for export or other disposition under applicable Customs laws and regulations by the end of the period of conditional admission. An engine not so delivered is subject to seizure by the U.S. Customs Service.

(d) An importer who violates section 213(d) and section 203 of the Act is subject to a civil penalty under section 205 of the Act and § 94.1106. In addition to the penalty provided in the Act and § 94.1106, where applicable, a person or entity who imports an engine under the exemption provisions of § 94.804 and, who fails to deliver the engine to the U.S. Customs Service by the end of the period of conditional admission is liable for liquidated damages in the amount of the bond required by applicable Customs laws and regulations.

Subpart J—Exclusion and Exemption Provisions

§ 94.901 Purpose and applicability.

The provisions of this subpart identify excluded engines (i.e., engines not covered by the Act) and allow for the exemption of engines from certain provisions of this part. The applicability of the exclusions is described in § 94.903, and the applicability of the exemption allowances is described in §§ 94.904 through 94.909.

§ 94.902 Definitions.

The definitions of Subpart A of this part apply to this subpart.

§ 94.903 Exclusions.

(a) Upon written request with supporting documentation, EPA will make written determinations as to whether certain engines are excluded from applicability of this part. Any engines that are determined to be excluded are not subject to the regulations under this part. Requests to determine whether certain engines are excluded should be sent to the Designated Officer.

(b) EPA will maintain a list of models of engines that have been determined to be excluded from coverage under this part. This list will be available to the public and may be obtained by writing to the address in paragraph (a) of this section.

(c) In addition to the engines excluded in paragraph (a) of this section, certain engines are not subject to the requirements and prohibitions of this part because they are excluded from the definitions of ''marine engine'' in § 94.2.

§ 94.904 Exemptions.

(a) Except as specified otherwise in this subpart, the provisions of §§ 94.904 through 94.911 exempt certain new engines from the standards, other requirements, and prohibitions of this part, except for the requirements of this subpart and the requirements of § 94.1104. Additional requirements may apply for imported engines; these are described in subpart I of this part.

(b)(1) Any person may request a testing exemption subject to the provisions of § 94.905.

(2) Any engine manufacturer may request a national security exemption subject to the provisions of § 94.908.

(3) Engines manufactured for export purposes are exempt without application, subject to the provisions of § 94.909, except as otherwise specified by § 94.909.

(4) Manufacturer-owned engines are exempt without application, subject to the provisions of § 94.906(a).

(5) Display engines are exempt without application, subject to the provisions of § 94.906(b). This does not apply to imported engines (see § 94.804).

(6) Engines used solely for competition are exempt, subject to the provisions of § 94.906(c).

(7) Engines used on foreign trade vessels are exempt, subject to the provisions of § 94.906(d).

§ 94.905 Testing exemption.

(a)(1) The Administrator may exempt from the standards and/or other requirements and prohibitions of this part new engines that are being used solely for the purpose of conducting a test program. Any person requesting

an exemption for the purpose of conducting a test program must demonstrate the following:

(i) That the proposed test program has a purpose which constitutes an appropriate basis for an exemption in accordance this section;

(ii) That the proposed test program necessitates the granting of an exemption;

(iii) That the proposed test program exhibits reasonableness in scope; and

(iv) That the proposed test program exhibits a degree of oversight and control consonant with the purpose of the test program and EPA's monitoring requirements.

(2) Paragraphs (b), (c), (d), and (e) of this section describe what constitutes a sufficient demonstration for each of the four elements identified in paragraphs (a)(1)(i) through (iv) of this section.

(b) With respect to the purpose of the proposed test program, an appropriate purpose would be research, investigations, studies, demonstrations, technology development, or training, but not national security. A concise statement of purpose is a required item of information.

(c) With respect to the necessity that an exemption be granted, necessity arises from an inability to achieve the stated purpose in a practicable manner without performing or causing to be performed one or more of the prohibited acts under § 94.1103. In appropriate circumstances, time constraints may be a sufficient basis for necessity, but the cost of certification alone, in the absence of extraordinary circumstances, is not a basis for necessity.

(d) With respect to reasonableness, a test program must exhibit a duration of reasonable length and affect a reasonable number of engines. In this regard, required items of information include:

(1) An estimate of the program's duration; and

(2) The maximum number of engines involved.

(e) With respect to control, the test program must incorporate procedures consistent with the purpose of the test and be capable of affording EPA monitoring capability. As a minimum, required items of information include:

(1) The technical nature of the testing;

(2) The location(s) of the testing;

(3) The time or work duration of the testing;

(4) The ownership arrangement with regard to the engines involved in the testing;

(5) The intended final disposition of the engines;

(6) The manner in which the engine identification numbers will be identified, recorded, and made available; and

(7) The means or procedure whereby test results will be recorded.

(f) A manufacturer of new engines may request a testing exemption to cover engines intended for use in test programs planned or anticipated over the course of a subsequent two-year period. Unless otherwise required by the Director, Engine Programs and Compliance Division, a manufacturer requesting such an exemption need only furnish the information required by paragraphs (a)(1) and (d)(2) of this section along with a description of the recordkeeping and control procedures that will be employed to assure that the engines are used for purposes consistent with paragraph (a) of this section.

(g) For engines being used for the purpose of developing a fundamentally new emission control technology related either to an alternative fuel or an aftertreatment device, the Administrator may exempt the engine from some or all of the applicable standards of this part for the full useful life of the engine, subject to the provisions of paragraphs (a) through (f) of this section.

§ 94.906 Manufacturer-owned exemption, display exemption, competition exemption, and foreign trade vessel exemption.

(a) *Manufacturer-owned exemption.* Any manufacturer-owned engine, as defined by § 94.2, is exempt from § 94.1103, without application, if the manufacturer complies with the following terms and conditions:

(1) The manufacturer must establish, maintain, and retain the following adequately organized and indexed information on each exempted engine:

(i) engine identification number;

(ii) Use of the engine on exempt status; and

(iii) Final disposition of any engine removed from exempt status.

(2) The manufacturer must provide right of entry and access to these records to EPA Enforcement Officers as outlined in § 94.208.

(3) The manufacturer must permanently affix a label to each engine on exempt status, unless the requirement is waived or an alternate procedure is approved by the Director, Engine Programs and Compliance Division. This label should:

(i) Be affixed in a readily visible portion of the engine;

(ii) Be attached in such a manner that cannot be removed without destruction or defacement;

(iii) State in the English language and in block letters and numerals of a color that contrasts with the background of the label, the following information:

(A) The label heading ''Emission Control Information'';

(B) Full corporate name and trademark of manufacturer;

(C) Engine displacement, engine family identification, and model year of engine; or person of office to be contacted for further information about the engine;

(D) The statement ''This engine is exempt from the prohibitions of 40 CFR 94.1103.''

(4) No provision of paragraph (a)(3) of this section prevents a manufacturer from including any other information it desires on the label.

(5) The engine is not used in revenue-generating service, or sold.

(b) *Display exemption.* An uncertified engine that is to be used solely for display purposes, and that will only be operated incident and necessary to the display purpose, and will not be sold unless an applicable certificate of conformity has been obtained for the engine, is exempt without request from the standards of this part. This does not apply to imported engines (see § 94.804).

(c) *Competition exemption.* The Administrator may exempt, upon request, engines that are intended by the manufacturer to be used solely for competition. Engines that are modified after they have been placed into service and are used solely for competition are exempt without request.

(d) *Foreign trade exemption.* (1) The Administrator may exempt, upon request of the vessel owner, engines used on U.S.-flagged vessels meeting the provisions of paragraph (d)(2) of this section.

(2) Vessel owners requesting an exemption under this paragraph (d) must demonstrate to the Administrator that:

(i) The vessel will spend less than 25 percent of its operating time within 320 nautical kilometers of U.S. territory; or

(ii) That it will not operate between two United States ports.

(3) For the purpose of this paragraph (d), the term ''vessel owner'' includes any entities that have contracted to purchase a new marine vessel.

(4) The engine manufacturer must label the engine, and must include on the label the following statement: ''THIS ENGINE IS SUBJECT TO THE MARPOL ANNEX VI NO_X LIMITS AND IS INTENDED FOR USE SOLELY ON VESSELS THAT SERVICE FOREIGN PORTS AS DESCRIBED IN 40 CFR 94.906.'', or a similar statement approved by the Administrator.

§ 94.907 Engine dressing exemption.

(a) This section applies to you if you are an engine manufacturer (this includes post-manufacture marinizers).

(b) The only requirements or prohibitions from this part that apply to an engine that is exempt under this section are in this section.

(c) The requirements and prohibitions of this part apply to all engines in the scope of § 94.1 that do not qualify for the engine dressing exemption.

(d) New marine engines that meets all the following criteria are exempt under this section:

(1) You must produce it by marinizing an engine covered by a valid certificate of conformity from one of the following programs:

(i) Heavy-duty highway engines (40 CFR part 86).

(ii) Land-based nonroad diesel engines (40 CFR part 89).

(iii) Locomotive engines (40 CFR part 92).

(2) The engine must have the label that required under 40 CFR part 86, 89, or 92.

(3) You must not make any changes to the certified engine that could reasonably be expected to increase its emissions. For example, if you make any of the following changes to one of these engines, you do not qualify for the engine dressing exemption:

(i) Change any fuel system parameters from the certified configuration.

(ii) Replace an original turbocharger.

(iii) Modify or design the marine engine cooling or aftercooling system so that temperatures or heat rejection rates are outside the original engine manufacturer's specified ranges.

(4) The engine model must not be primarily for marine applications. This means that total sales of the engine model, from all companies, must be mostly for non-marine applications.

(e) If you dress an engine under this exemption, you must do all of the following:

(1) Make sure the original engine label will remain clearly visible after installation in the vessel.

(2) Add a permanent supplemental label to the engine in a position where it will remain clearly visible after installation in the vessel. In your engine label, do the following:

(i) Include the heading: ''Marine Engine Emission Control Information''.

(ii) Include your full corporate name and trademark.

(iii) State: ''This engine was marinized without affecting its emission controls.''

(iv) State the date you finished marinizing the engine (month and year).

(3) Send a signed letter to the Designated Officer by the end of each calendar year (or less often if we tell you) with all the following information:

(i) Identify your full corporate name, address, and telephone number.

(ii) List the engine models you expect to produce under this exemption in the coming year.

(iii) State: ''We produce each listed engine model for marine application without making any changes that could increase its certified emission levels, as described in 40 CFR 94.907.''

(f) In general you may use up your inventory of engines that are not certified to new marine emission standards if they were originally manufactured before the date of the new standards. However, stockpiling these engines is a violation of § 94.1103(a)(1)(i)(A).

(g) If your engines do not meet the criteria listed in paragraphs (d)(2) through (d)(4) of this section, they will be subject to the standards and prohibitions of this part. Marinization without an exemption would be a violation of § 94.1103(a)(1) and/or the tampering prohibitions of the applicable land-based regulations (40 CFR Parts 86, 89, or 92).

(h)(1) If you are the original manufacturer and marinizer of an exempted engine, you must send us emission test data on the appropriate marine duty cycles. You can include the data in your application for certification or in the letter described in paragraph (e)(3) of this section.

(2) If you are the original manufacturer of an exempted engine that is marinized by a post-manufacture marinizer, you may be required to send us emission test data on the appropriate marine duty cycles. If such data are requested you will be allowed a reasonable amount of time to collect the data.

§ 94.908 National security exemption.

(a)(1) Any marine engine, otherwise subject to this part, that is used in a vessel that exhibits substantial features ordinarily associated with military combat such as armor, permanently affixed weaponry, specialized electronic warfare systems, unique stealth performance requirements, and/or unique combat maneuverability requirements and which will be owned and/or used by an agency of the federal government with the responsibility for national defense, will be exempt from the regulations in this subpart for reasons of national security. No request for this exemption is necessary.

(2) Manufacturers may request a national security exemption for any marine engine, otherwise subject to this part, which does not meet the conditions described in paragraph (a)(1) of

this section. A manufacturer requesting a national security exemption must state the purpose for which the exemption is required and the request must be endorsed by an agency of the federal government charged with responsibility for national defense.

(b) EPA will maintain a list of models of marine engines (and the vessels which use them) that have been granted a national security exemption under paragraph (a)(2) of this section. This list will be available to the public and may be obtained by writing to the Designated Officer.

§94.909 Export exemptions.

(a) A new engine intended solely for export, and so labeled or tagged on the outside of any container and on the engine, is subject to the provisions of §94.1103, unless the importing country has new marine engine emission standards which differ from EPA standards.

(b) For the purpose of paragraph (a) of this section, a country having no standards whatsoever is deemed to be a country having emission standards which differ from EPA standards.

(c) It is a condition of any exemption for the purpose of export under paragraph (a) of this section, that such exemption is void ab initio with respect to a new engine intended solely for export, where such engine is sold, or offered for sale, to an ultimate purchaser or otherwise distributed or introduced into commerce in the United States for purposes other than export.

§94.910 Granting of exemptions.

(a) If upon completion of the review of an exemption request made pursuant to §94.905 or §94.908, EPA determines it is appropriate to grant such an exemption, a memorandum of exemption is to be prepared and submitted to the person requesting the exemption. The memorandum is to set forth the basis for the exemption, its scope, and such terms and conditions as are deemed necessary. Such terms and conditions generally include, but are not limited to, agreements by the applicant to conduct the exempt activity in the manner described to EPA, create and maintain adequate records accessible to EPA at reasonable times, employ labels for the exempt engines setting forth the nature of the exemption, take appropriate measures to assure that the terms of the exemption are met, and advise EPA of the termination of the activity and the ultimate disposition of the engines.

(b) Any exemption granted pursuant to paragraph (a) of this section is deemed to cover any subject engine only to the extent that the specified terms and conditions are complied with. A breach of any term or condition causes the exemption to be void ab initio with respect to any engine. Consequently, the causing or the performing of an act prohibited under §94.1103(a)(1) or (a)(3), other than in strict conformity with all terms and conditions of this exemption, renders the person to whom the exemption is granted, and any other person to whom the provisions of §94.1103(a) are applicable, liable to suit under sections 204 and 205 of the Act.

§94.911 Submission of exemption requests.

Requests for exemption or further information concerning exemptions and/or the exemption request review procedure should be addressed to the Designated Officer.

Subpart K—[Reserved]

Subpart L—General Enforcement Provisions and Prohibited Acts

§94.1101 Applicability.

The requirements of this subpart are applicable to all persons with respect to engines subject to the provisions of Subpart A of this part.

§94.1102 Definitions.

The definitions of subpart A of this part apply to this subpart.

§94.1103 Prohibited acts.

(a) The following acts and the causing thereof are prohibited:

(1)(i)(A) In the case of a manufacturer of new engines, the sale, the offering for sale, the introduction into commerce, the delivery for introduction into commerce, or the distribution in commerce of any new engine that is subject to the standards of this part,

unless such engine is covered by a certificate of conformity issued (and in effect) under regulations found in this part.

(B) The manufacture of a engine for the purpose of an act listed in paragraph (a)(1)(i)(A) of this section unless such engine is covered by a certificate of conformity issued (and in effect) under regulations found in this part prior to its introduction into commerce.

(ii) In the case of any person, except as provided in Subpart I of this part, the importation into the United States of any engine manufactured on or after the implementation date of the applicable emission limits for the relevant engine, unless such engine is covered by a certificate of conformity issued (and in effect) under regulations found in this part.

(2)(i) For a person to fail or refuse to permit access to or copying of records or to fail to make reports or provide information required under this part.

(ii) For a person to fail or refuse to permit entry, testing, or inspection authorized under this part.

(iii) For a person to fail or refuse to perform tests, or to have tests performed as required by this part.

(iv) For a person to fail to establish or maintain records as required under this part.

(3)(i) For a person to remove or render inoperative a device or element of design installed on or in a engine in compliance with regulations under this part, or to set any adjustable parameter to a setting outside of the range specified by the manufacturer, as approved in the application for certification by the Administrator.

(ii) For a person to manufacture, sell or offer to sell, or install, a part or component intended for use with, or as part of, a engine, where a principal effect of the part or component is to bypass, defeat, or render inoperative a device or element of design installed on or in a engine in compliance with regulations issued under this part, and where the person knows or should know that the part or component is being offered for sale or installed for this use or put to such use.

(iii) for a person to deviate from the provisions of § 94.11 when rebuilding an engine (or rebuilding a portion of an engine or engine system).

(4) For a manufacturer of a new engine subject to standards prescribed under this part:

(i) To sell, offer for sale, or introduce or deliver for introduction into commerce, a new engine unless the manufacturer has complied with the requirements of § 94.1107.

(ii) To sell, offer for sale, or introduce or deliver for introduction into commerce, a new engine unless all required labels and tags are affixed to the engine in accordance with § 94.212.

(iii) To fail or refuse to comply with the requirements of § 94.1108.

(iv) Except as provided in § 94.211, to provide directly or indirectly in any communication to the ultimate purchaser or a subsequent purchaser that the coverage of a warranty under the Act is conditioned upon use of a part, component, or system manufactured by the manufacturer or a person acting for the manufacturer or under its control, or conditioned upon service performed by such persons.

(v) To fail or refuse to comply with the terms and conditions of the warranty under § 94.1107.

(5) For a manufacturer of marine vessels to distribute in commerce, sell, offer for sale, or deliver for introduction into commerce a new vessel containing an engine not covered by a certificate of conformity applicable for an engine model year the same as or later than the calendar year in which the manufacture of the new vessel is initiated. (Note: For the purpose of this paragraph (a)(5), the manufacture of a vessel is initiated when the keel is laid, or the vessel is at a similar stage of construction.)

(6) For any person to install a recreational marine engine in a vessel that is manufactured on or after the implementation date of the applicable standards and that is not a recreational vessel.

(b) For the purposes of enforcement of this part, the following apply:

(1) Nothing in paragraph (a)(3) of this section is to be construed to require the use of any manufacturer's parts in maintaining or repairing a engine.

(2)(i) Actions for the purpose of repair or replacement of a device or element of design or any other item are not considered prohibited acts under paragraph (a)(3)(i) of this section if the action is a necessary and temporary procedure, the device or element is replaced upon completion of the procedure, and the action results in the proper functioning of the device or element of design.

(ii) Actions for emergency purposes are not considered prohibited acts under paragraph (a)(3)(i) of this section if the action is a necessary and temporary procedure and the device or element is replaced such that the proper functioning of the device or element of design is restored as soon as possible.

(3) Where the Administrator determines that no engine that is certified to the requirements of this part is produced by any manufacturer with the appropriate physical or performance characteristics to repower a vessel, the Administrator may allow an engine manufacturer to introduce into commerce a replacement engine without complying with all of the otherwise applicable requirements of this part. Such engine shall not be subject to the prohibitions of paragraph (a)(1) of this section, provided that:

(i) The engine requiring replacement is not certified or is certified to emission standards that are less stringent than those in effect when the replacement engine is built; and

(ii) The engine manufacturer or its agent takes ownership and possession of the engine being replaced in partial exchange for the replacement engine; and

(iii) The replacement engine is clearly labeled with the following language, or similar alternate language approved by the Administrator: ''THIS ENGINE DOES NOT COMPLY WITH FEDERAL MARINE ENGINE EMISSION REQUIREMENTS. SALE OR INSTALLATION OF THIS ENGINE FOR ANY PURPOSE OTHER THAN AS A REPLACEMENT ENGINE FOR AN ENGINE MANUFACTURED PRIOR TO JANUARY 1 [INSERT APPROPRIATE YEAR] IS A VIOLATION OF FEDERAL LAW SUBJECT TO CIVIL PENALTY''; and

(iv) In cases where an engine is to be imported for replacement purposes under the provisions of this paragraph (b)(3) of this section, the term ''engine manufacturer'' shall not apply to an individual or other entity that does not possess a current Certificate of Conformity issued by EPA under this part; and

(v) Where the replacement engine is intended to replace an engine that is certified to emission standards that are less stringent than those in effect when the replacement engine is built, the replacement engine shall be identical in all material respects to a certified configuration of the same or later model year as the engine being replaced; and

(vi) Engines sold pursuant to the provisions of this paragraph will neither generate nor use emission credits and will not be part of any accounting under the averaging, banking and trading program.

§94.1104 General enforcement provisions.

(a) *Information collection provisions.* (1)(i) Every manufacturer of new engines and other persons subject to the requirements of this part must establish and maintain records, perform tests, make reports and provide information the Administrator may reasonably require to determine whether the manufacturer or other person has acted or is acting in compliance with this part or to otherwise carry out the provisions of this part, and must, upon request of an officer or employee duly designated by the Administrator, permit the officer or employee at reasonable times to have access to and copy such records. The manufacturer shall comply in all respects with the requirements of subpart E of this part.

(ii) Every manufacturer or owner of engines exempted from the standards or requirements of this part must establish and maintain records, perform tests, make reports and provide information the Administrator may reasonably require regarding the emissions of such engines.

(2) For purposes of enforcement of this part, an officer or employee duly designated by the Administrator, upon presenting appropriate credentials, is authorized:

(i) To enter, at reasonable times, any establishment of the manufacturer, or of any person whom the manufacturer engaged to perform any activity required under paragraph (a)(1) of this section, for the purposes of inspecting or observing any activity conducted pursuant to paragraph (a)(1) of this section; and

(ii) To inspect records, files, papers, processes, controls, and facilities used in performing an activity required by paragraph (a)(1) of this section, by the manufacturer or by a person whom the manufacturer engaged to perform the activity.

(b) *Exemption provision*. The Administrator may exempt a new engine from § 94.1103 upon such terms and conditions as the Administrator may find necessary for the purpose of export, research, investigations, studies, demonstrations, or training, or for reasons of national security, or for other purposes allowed by subpart J of this part.

(c) *Importation provision*. (1) A new engine, offered for importation or imported by a person in violation of § 94.1103 is to be refused admission into the United States, but the Secretary of the Treasury and the Administrator may, by joint regulation, provide for deferring a final determination as to admission and authorizing the delivery of such a engine offered for import to the owner or consignee thereof upon such terms and conditions (including the furnishing of a bond) as may appear to them appropriate to insure that the engine will be brought into conformity with the standards, requirements, and limitations applicable to it under this part.

(2) If a engine is finally refused admission under this paragraph (c), the Secretary of the Treasury shall cause disposition thereof in accordance with the customs laws unless it is exported, under regulations prescribed by the Secretary, within 90 days of the date of notice of the refusal or additional time as may be permitted pursuant to the Treasury regulations.

(3) Disposition in accordance with the customs laws may not be made in such manner as may result, directly or indirectly, in the sale, to the ultimate consumer, of a new engine that fails to comply with applicable standards of the Administrator under this part.

(d) *Export provision*. A new engine intended solely for export, and so labeled or tagged on the outside of the container if used and on the engine, shall be subject to the provisions of § 94.1103, except that if the country that is to receive the engine has emission standards that differ from the standards prescribed under subpart A of this part, then the engine must comply with the standards of the country that is to receive the engine.

(e) *Recordkeeping*. Except where specified otherwise, records required by this part must be kept for eight (8) years.

§ 94.1105 Injunction proceedings for prohibited acts.

(a) The district courts of the United States have jurisdiction to restrain violations of § 94.1103(a).

(b) Actions to restrain violations of § 94.1103(a) must be brought by and in the name of the United States. In an action, subpoenas for witnesses who are required to attend a district court in any district may run into any other district.

§ 94.1106 Penalties.

(a) *Violations*. A violation of the requirements of this subpart is a violation of the applicable provisions of the Act, including sections 213(d) and 203, and is subject to the penalty provisions thereunder.

(1) A person who violates § 94.1103(a)(1), (a)(4), (a)(5), or (a)(6), or a manufacturer or dealer who violates § 94.1103(a)(3)(i) or (iii) is subject to a civil penalty of not more than $25,000 for each violation unless modified by the Debt Collection Improvement Act (31 U.S.C. chapter 37) and/or regulations issued there under.

(2) A person other than a manufacturer or dealer who violates § 94.1103(a)(3)(i) or (iii) or any person who violates § 94.1103(a)(3)(ii) is subject to a civil penalty of not more than $2,500 for each violation unless modified by the Debt Collection Improvement Act and/or regulations issued thereunder.

(3) A violation with respect to § 94.1103(a)(1), (a)(3)(i), (a)(4), or (a)(5)

constitutes a separate offense with respect to each engine.

(4) A violation with respect to §94.1103(a)(3)(ii) constitutes a separate offense with respect to each part or component. Each day of a violation with respect to §94.1103(a)(5) constitutes a separate offense.

(5) A person who violates §94.1103(a)(2) or (a)(5) is subject to a civil penalty of not more than $25,000 per day of violation unless modified by the Debt Collection Improvement Act and/or regulations issued thereunder.

(b) *Civil actions*. The Administrator may commence a civil action to assess and recover any civil penalty under paragraph (a) of this section.

(1) An action under this paragraph (b) may be brought in the district court of the United States for the district in which the defendant resides or has the Administrator's principal place of business, and the court has jurisdiction to assess a civil penalty.

(2) In determining the amount of a civil penalty to be assessed under this paragraph (b), the court is to take into account the gravity of the violation, the economic benefit or savings (if any) resulting from the violation, the size of the violator's business, the violator's history of compliance with Title II of the Act, action taken to remedy the violation, the effect of the penalty on the violator's ability to continue in business, and such other matters as justice may require.

(3) In any such action, subpoenas for witnesses who are required to attend a district court in any district may run into any other district.

(c) *Administrative assessment of certain penalties*.—(1) *Administrative penalty authority*. In lieu of commencing a civil action under paragraph (b) of this section, the Administrator may assess any civil penalty prescribed in paragraph (a) of this section, except that the maximum amount of penalty sought against each violator in a penalty assessment proceeding shall not exceed $200,000, unless the Administrator and the Attorney General jointly determine that a matter involving a larger penalty amount is appropriate for administrative penalty assessment. Any such determination by the Administrator and the Attorney General is not subject to judicial review. Assessment of a civil penalty shall be by an order made on the record after opportunity for a hearing held in accordance with the procedures found at 40 CFR Part 22. The Administrator may compromise, or remit, with or without conditions, any administrative penalty which may be imposed under this section.

(2) *Determining amount*. In determining the amount of any civil penalty assessed under this paragraph (c), the Administrator shall take into account the gravity of the violation, the economic benefit or savings (if any) resulting from the violation, the size of the violator's business, the violator's history of compliance with Title II of the Act, action taken to remedy the violation, the effect of the penalty on the violator's ability to continue in business, and such other matters as justice may require.

(3) *Effect of administrator's action*. (i) Action by the Administrator under this paragraph (c) does not affect or limit the Administrator's authority to enforce any provisions of the Act; except that any violation with respect to which the Administrator has commenced and is diligently prosecuting an action under this paragraph (c), or for which the Administrator has issued a final order not subject to further judicial review and for which the violator has paid a penalty assessment under this paragraph shall not be the subject of a civil penalty action under paragraph (b) of this section.

(ii) No action by the Administrator under this paragraph (c) shall affect a person's obligation to comply with a section of this part.

(4) *Finality of order*. An order issued under this paragraph (c) is to become final 30 days after its issuance unless a petition for judicial review is filed under paragraph (c)(5) of this section.

(5) *Judicial review*. A person against whom a civil penalty is assessed in accordance with this paragraph (c) may seek review of the assessment in the United States District Court for the District of Columbia or for the district in which the violation is alleged to have occurred, in which such person resides, or where the person's principal place of business is located, within the 30-day period beginning on the date a

civil penalty order is issued. The person shall simultaneously send a copy of the filing by certified mail to the Administrator and the Attorney General. The Administrator shall file in the court within 30 days a certified copy, or certified index, as appropriate, of the record on which the order was issued. The court is not to set aside or remand any order issued in accordance with the requirements of this paragraph (c) unless substantial evidence does not exist in the record, taken as a whole, to support the finding of a violation or unless the Administrator's assessment of the penalty constitutes an abuse of discretion, and the court is not to impose additional civil penalties unless the Administrator's assessment of the penalty constitutes an abuse of discretion. In any proceedings, the United States may seek to recover civil penalties assessed under this section.

(6) *Collection.* (i) If any person fails to pay an assessment of a civil penalty imposed by the Administrator as provided in this part after the order making the assessment has become final or after a court in an action brought under paragraph (c)(5) of this section has entered a final judgment in favor of the Administrator, the Administrator shall request that the Attorney General bring a civil action in an appropriate district court to recover the amount assessed (plus interest at rates established pursuant to section 6621(a)(2) of the Internal Revenue Code of 1986 (26 U.S.C. 6621(a)(2)) from the date of the final order or the date of final judgment, as the case may be). In such an action, the validity, amount, and appropriateness of the penalty is not subject to review.

(ii) A person who fails to pay on a timely basis the amount of an assessment of a civil penalty as described in paragraph (c)(6)(i) of this section shall be required to pay, in addition to that amount and interest, the United States' enforcement expenses, including attorney's fees and costs for collection proceedings, and a quarterly nonpayment penalty for each quarter during which the failure to pay persists. The nonpayment penalty is an amount equal to ten percent of the aggregate amount of that person's penalties and nonpayment penalties which are unpaid as of the beginning of such quarter.

§ 94.1107 Warranty provisions.

(a) The manufacturer of each engine must warrant to the ultimate purchaser and each subsequent purchaser or owner that the engine is designed, built, and equipped so as to conform at the time of sale with applicable regulations under section 213 of the Act, and is free from defects in materials and workmanship which cause such engine to fail to conform with applicable regulations for its warranty period (as determined under § 94.10).

(b) For the purposes of this section, the owner of any engine warranted under this part is responsible for the proper maintenance of the engine. Proper maintenance includes replacement and/or service, as needed, at the owner's expense at a service establishment or facility of the owner's choosing, of all parts, items, or devices which were in general use with engines prior to 1999. For diesel engines, this would generally include replacement or cleaning of the fuel delivery and injection system.

§ 94.1108 In-use compliance provisions.

(a) Effective with respect to engines subject to the requirements of this part:

(1) If the Administrator determines that a substantial number of any class or category of engines, although properly maintained and used, do not conform to the regulations prescribed under section 213 of the Act when in actual use throughout their useful life period (as defined under § 94.2), the Administrator shall immediately notify the manufacturer of such nonconformity and require the manufacturer to submit a plan for remedying the nonconformity of the engines with respect to which such notification is given.

(i) The manufacturer's plan shall provide that the nonconformity of any such engines which are properly used and maintained will be remedied at the expense of the manufacturer.

(ii) If the manufacturer disagrees with such determination of nonconformity and so advises the Administrator, the Administrator shall afford

the manufacturer and other interested persons an opportunity to present their views and evidence in support thereof at a public hearing. Unless, as a result of such hearing, the Administrator withdraws such determination of nonconformity, the Administrator shall, within 60 days after the completion of such hearing, order the manufacturer to provide prompt notification of such nonconformity in accordance with paragraph (a)(2) of this section.

(2) Any notification required to be given by the manufacturer under paragraph (a)(1) of this section with respect to any class or category of engines shall be given to ultimate purchasers, subsequent purchasers (if known), and dealers (as applicable) in such manner and containing such information as required in Subparts E and H of this part.

(3)(i) The certifying manufacturer shall furnish with each new engine written instructions for the proper maintenance and use of the engine by the ultimate purchaser as required under § 94.211.

(ii) The instruction under paragraph (a)(3)(i) of this section must not include any condition on the ultimate purchaser's using, in connection with such engine, any component or service (other than a component or service provided without charge under the terms of the purchase agreement) which is identified by brand, trade, or corporate name. Such instructions also must not directly or indirectly distinguish between service performed by the franchised dealers of such manufacturer, or any other service establishments with which such manufacturer has a commercial relationship, and service performed by independent engine repair facilities with which such manufacturer has no commercial relationship.

(iii) The prohibition of paragraph (a)(3)(ii) of this section may be waived by the Administrator if:

(A) The manufacturer satisfies the Administrator that the engine will function properly only if the component or service so identified is used in connection with such engine; and

(B) The Administrator finds that such a waiver is in the public interest.

(iv) In addition, the manufacturer shall indicate by means of a label or tag permanently affixed to the engine that the engine is covered by a certificate of conformity issued for the purpose of assuring achievement of emission standards prescribed under section 213 of the Act. This label or tag shall also contain information relating to control of emissions as prescribed under § 94.212.

(b) The manufacturer bears all cost obligation any dealer incurs as a result of a requirement imposed by paragraph (a) of this section. The transfer of any such cost obligation from a manufacturer to a dealer through franchise or other agreement is prohibited.

(c) If a manufacturer includes in an advertisement a statement respecting the cost or value of emission control devices or systems, the manufacturer shall set forth in the statement the cost or value attributed to these devices or systems by the Secretary of Labor (through the Bureau of Labor Statistics). The Secretary of Labor, and his or her representatives, has the same access for this purpose to the books, documents, papers, and records of a manufacturer as the Comptroller General has to those of a recipient of assistance for purposes of section 311 of the Act.

APPENDIX I TO PART 94;—EMISSION-RELATED ENGINE PARAMETERS AND SPECIFICATIONS

I. Basic Engine Parameters—Reciprocating Engines.
1. Compression ratio.
2. Type of air aspiration (natural, Roots blown, supercharged, turbocharged).
3. Valves (intake and exhaust).
a. Head diameter dimension.
b. Valve lifter or actuator type and valve lash dimension.
4. Camshaft timing.
a. Valve opening—intake exhaust (degrees from TDC or BDC).
b. Valve closing—intake exhaust (degrees from TDC or BDC).
c. Valve overlap (degrees).
5. Ports—two stroke engines (intake and/or exhaust).
a. Flow area.
b. Opening timing (degrees from TDC or BDC).
c. Closing timing (degrees from TDC or BDC).

II. Intake Air System.
1. Roots blower/supercharger/turbocharger calibration.
2. Charge air cooling.

a. Type (air-to-air; air-to-liquid).
b. Type of liquid cooling (engine coolant, dedicated cooling system).
c. Performance (charge air delivery temperature (°F) at rated power and one other power level under ambient conditions of 80°F and 110°F, and 3 minutes and 15 minutes after selecting rated power, and 3 minutes and 5 minutes after selecting other power level).
3. Temperature control system calibration.
4. Maximum allowable inlet air restriction.
III. Fuel System.
1. General.
a. Engine idle speed.
2. Fuel injection—compression ignition engines.
a. Control parameters and calibrations.
b. Transient enrichment system calibration.
c. Air-fuel flow calibration.
d. Altitude compensation system calibration.
e. Operating pressure(s).
f. Injector timing calibration.
IV. Engine Cooling System.
1. Thermostat calibration.
V. Exhaust System.
1. Maximum allowable back pressure.
VI. Exhaust Emission Control System.
1. Air injection system.
a. Control parameters and calibrations.
b. Pump flow rate.
2. EGR system.
a. Control parameters and calibrations.
b. EGR valve flow calibration.
3. Catalytic converter system.
a. Active surface area.
b. Volume of catalyst.
c. Conversion efficiency.
4. Backpressure.
VII. Crankcase Emission Control System.
1. Control parameters and calibrations.
2. Valve calibrations.
VIII. Auxiliary Emission Control Devices (AECD).
1. Control parameters and calibrations.
2. Component calibration(s).

PART 95—MANDATORY PATENT LICENSES

Sec.
95.1 Definitions.
95.2 Petition for mandatory license.
95.3 Findings prior to application to Attorney General.
95.4 Limitations on mandatory licenses.

AUTHORITY: 42 U.S.C. 7609; Sec. 104, Pub. L. 103–182, 107 Stat. 2057, 2064.

SOURCE: 59 FR 67638, Dec. 30, 1994, unless otherwise noted.

§ 95.1 Definitions.

(a) As used in this part, all terms not defined in this section shall have the meaning given them by the Act.

(b) *Act* means the Clean Air Act, as amended (42 U.S.C. §§ 7401–7671).

(c) *Agency* means the Environmental Protection Agency.

(d) *Administrator* means the Administrator of the Environmental Protection Agency.

§ 95.2 Petition for mandatory license.

(a) Any party required to comply with sections 111, 112 or 202 of the Act (42 U.S.C. 7411, 7412 or 7521) may petition to the Administrator for a mandatory patent license pursuant to section 308 of the Act (42 U.S.C. 7608), under a patent that the petitioner maintains is necessary to enable the petitioner to comply with Sections 111, 112 or 202 of the Act.

(b)(1) Each petition shall be signed by the petitioner and shall state the petitioner's name and address. If the petitioner is a corporation, the petition shall be signed by an authorized officer of the corporation, and the petition shall indicate the state of incorporation. Where the petitioner elects to be represented by counsel, a signed notice to that effect shall be included with the petition at the time of filing.

(2) Each petition shall include a copy of the patent under which a mandatory patent license is sought. The petition shall identify all current owners of the patent and shall include a copy of all assignment documents relevant to the patent that are available from the United States Patent and Trademark Office.

(3) Each petition must identify any person whose interest the petitioner believes may be affected by the grant of the license to which the petition is directed.

(4) Each petition must contain a concise statement of all of the essential facts upon which it is based. No particular form of statement is required. Each petition shall be verified by the petitioner or by the person having the best knowledge of such facts. In the case of facts stated on information and belief, the source of such information and grounds of belief shall be given.

The statement of facts shall include the following:

(i) An identification of the provisions of the Act and/or regulations thereunder that the petitioner maintains petitioner will be able to comply with if the petitioner is granted the patent license that is the subject of the petition;

(ii) An identification of the nature and purpose of the petitioner's intended use of the patent license;

(iii) An explanation of the relationship between the patented technology and the activities to which petitioner proposes to apply the patented technology, including an estimate of the effect on such activities stemming from the grant or denial of the patent license;

(iv) A summary of facts demonstrating that the patent under which a mandatory patent license is sought is being used or is intended for public or commercial use;

(v) An explanation of why a mandatory patent license is necessary for the petitioner to comply with the requirements of sections 111, 112 or 202 of the Act, and why the patented technology is not otherwise available;

(vi) An explanation of why there are no other reasonable alternatives for accomplishing compliance with sections 111, 112 or 202 of the Act;

(vii) An explanation of why the unavailability of a mandatory patent license may result in a substantial lessening of competition or a tendency to create a monopoly in any line of commerce in any section of the United States;

(viii) A summary of efforts made by the petitioner to obtain a patent license from the owner of the patent, including the terms and conditions of any patent license proposed by petitioner to the patent owner; and

(ix) The terms, if any, on which the owner of the patent has proposed to grant the petitioner a patent license.

(5) Each petition shall include a proposed patent license that states all of the terms and conditions that the petitioner proposes for the patent license.

(6) Petitions shall be addressed to the Assistant Administrator for Air and Radiation, Mail Code 6101, U.S. Environmental Protection Agency, Washington, DC 20460.

(c) Petitions that do not include all of the information required in paragraph (b) of this section shall be returned to the petitioner. The petitioner may supplement the petition and resubmit the petition.

(d) If the Administrator, or the Administrator's designee, finds that the criteria in §95.3 are not met, or otherwise decides to deny the petition, a denial of the petition shall be sent to the petitioner, along with an explanation of the reasons for the denial.

(e) If the Administrator, or the Administrator's designee, finds that the criteria in §95.3 are met and decides to apply to the Attorney General for a patent license under section 308 of the Act, notice of such application shall be given to the petitioner, along with a copy of the application sent to the Attorney General.

§95.3 Findings prior to application to Attorney General.

The Administrator, or the Administrator's designee, may apply to the Attorney General for a mandatory patent license pursuant to section 308 of the Act (42 U.S.C. 7608) either in response to a petition under §95.2 or on the Administrator's or designee's own initiative, only after expressly finding that each one of the following mandatory criteria is met:

(a) The application is for a patent license covering no more than one patent;

(b) The party to whom the proposed patent license is to be granted has presented the Administrator or designee with evidence that such party has made reasonable efforts to obtain a patent license from the patent owner with terms similar to the license terms to be proposed in the application to the Attorney General;

(c) The patent under which a patent license is sought in the application to the Attorney General is being used or is intended for public or commercial use;

(d) The mandatory patent license is necessary for a party to comply with the requirements of sections 111, 112 or 202 of the Act (42 U.S.C. 7411, 7412 or 7521);

(e) The patented technology is not otherwise reasonably available, and there are no other reasonable alternatives for accomplishing compliance with sections 111, 112 or 202 of the Act (42 U.S.C. 7411, 7412 or 7521); and

(f) The unavailability of a mandatory patent license may result in a substantial lessening of competition or a tendency to create a monopoly in any line of commerce in any section of the United States.

§ 95.4 Limitations on mandatory licenses

(a) If the Administrator, or the Administrator's designee, decides to apply to the Attorney General for a mandatory patent license in accordance with § 95.3, the application shall include a proposed patent license with the following limitations:

(1) The scope and duration of the patent license shall be limited to that necessary to permit the proposed licensee to comply with the requirements the Act;

(2) The patent license shall be non-exclusive;

(3) The patent license shall be non-assignable, except with that part of the enterprise or goodwill that enjoys the license;

(4) The patent license shall be for use of the licensed technology in the United States only;

(5) The patent license shall extend only to those uses necessary to enable the licensee to comply with sections 111, 112 or 202 of the Act (42 U.S.C. 7411, 7412 or 7521);

(6) The patent license shall provide for termination, subject to adequate protections of the legitimate interests of the licensed party, when the circumstances that made the compulsory patent license necessary cease to exist and are unlikely to recur; and

(7) The patent license shall provide for adequate remuneration that takes into account the economic value of the license.

(b) The Administrator, or the Administrator's designee, may decide as appropriate to include additional conditions, terms or limitations on the scope of the patent license for which application is made to the Attorney General.

PART 96—NO_X Budget Trading Program for State Implementation Plans

Subpart A—NO_X Budget Trading Program General Provisions

Sec.
96.1 Purpose.
96.2 Definitions.
96.3 Measurements, abbreviations, and acronyms.
96.4 Applicability.
96.5 Retired unit exemption.
96.6 Standard requirements.
96.7 Computation of time.

Subpart B—Authorized Account Representative for NO_X Budget Sources

96.10 Authorization and responsibilities of the NO_X authorized account representative.
96.11 Alternate NO_X authorized account representative.
96.12 Changing the NO_X authorized account representative and the alternate NO_X authorized account representative; changes in the owners and operators.
96.13 Account certificate of representation.
96.14 Objections concerning the NO_X authorized account representative.

Subpart C—Permits

96.20 General NO_X Budget trading program permit requirements.
96.21 Submission of NO_X Budget permit applications.
96.22 Information requirements for NO_X Budget permit applications.
96.23 NO_X Budget permit contents.
96.24 Effective date of initial NO_X Budget permit.
96.25 NO_X Budget permit revisions.

Subpart D—Compliance Certification

96.30 Compliance certification report.
96.31 Permitting authority's and Administrator's action on compliance certifications.

Subpart E—NO_X Allowance Allocations

96.40 State trading program budget.
96.41 Timing requirements for NO_X allowance allocations.
96.42 NO_X allowance allocations.

Subpart F—NO_X Allowance Tracking System

96.50 NO_X Allowance Tracking System accounts.
96.51 Establishment of accounts.

96.52 NO_X Allowance Tracking System responsibilities of NO_X authorized account representative.
96.53 Recordation of NO_X allowance allocations.
96.54 Compliance.
96.55 Banking.
96.56 Account error.
96.57 Closing of general accounts.

Subpart G—NO_X Allowance Transfers

96.60 Submission of NO_X allowance transfers.
96.61 EPA recordation.
96.62 Notification.

Subpart H—Monitoring and Reporting

96.70 General requirements.
96.71 Initial certification and recertification procedures.
96.72 Out of control periods.
96.73 Notifications.
96.74 Recordkeeping and reporting.
96.75 Petitions.
96.76 Additional requirements to provide heat input data for allocations purposes.

Subpart I—Individual Unit Opt-ins

96.80 Applicability.
96.81 General.
96.82 NO_X authorized account representative.
96.83 Applying for NO_X Budget opt-in permit.
96.84 Opt-in process.
96.85 NO_X Budget opt-in permit contents.
96.86 Withdrawal from NO_X Budget Trading Program.
96.87 Change in regulatory status.
96.88 NO_X allowance allocations to opt-in units.

Subpart J—Mobile and Area Sources [Reserved]

AUTHORITY: 42 U.S.C. 7401, 7403, 7410, and 7601.

SOURCE: 63 FR 57514, Oct. 27, 1998, unless otherwise noted.

Subpart A—NO_X Budget Trading Program General Provisions

§96.1 Purpose.

This part establishes general provisions and the applicability, permitting, allowance, excess emissions, monitoring, and opt-in provisions for the NO_X Budget Trading Program for State implementation plans as a means of mitigating the interstate transport of ozone and nitrogen oxides, an ozone precursor. The owner or operator of a unit, or any other person, shall comply with requirements of this part as a matter of federal law only to the extent a State that has jurisdiction over the unit incorporates by reference provisions of this part, or otherwise adopts such requirements of this part, and requires compliance, the State submits to the Administrator a State implementation plan including such adoption and such compliance requirement, and the Administrator approves the portion of the State implementation plan including such adoption and such compliance requirement. To the extent a State adopts requirements of this part, including at a minimum the requirements of subpart A (except for §96.4(b)), subparts B through D, subpart F (except for §96.55(c)), and subparts G and H of this part, the State authorizes the Administrator to assist the State in implementing the NO_X Budget Trading Program by carrying out the functions set forth for the Administrator in such requirements.

§96.2 Definitions.

The terms used in this part shall have the meanings set forth in this section as follows:

Account certificate of representation means the completed and signed submission required by subpart B of this part for certifying the designation of a NO_X authorized account representative for a NO_X Budget source or a group of identified NO_X Budget sources who is authorized to represent the owners and operators of such source or sources and of the NO_X Budget units at such source or sources with regard to matters under the NO_X Budget Trading Program.

Account number means the identification number given by the Administrator to each NO_X Allowance Tracking System account.

Acid Rain emissions limitation means, as defined in §72.2 of this chapter, a limitation on emissions of sulfur dioxide or nitrogen oxides under the Acid Rain Program under title IV of the CAA.

Administrator means the Administrator of the United States Environmental Protection Agency or the Administrator's duly authorized representative.

Allocate or *allocation* means the determination by the permitting authority or the Administrator of the number of NO_X allowances to be initially credited to a NO_X Budget unit or an allocation set-aside.

Automated data acquisition and handling system or *DAHS* means that component of the CEMS, or other emissions monitoring system approved for use under subpart H of this part, designed to interpret and convert individual output signals from pollutant concentration monitors, flow monitors, diluent gas monitors, and other component parts of the monitoring system to produce a continuous record of the measured parameters in the measurement units required by subpart H of this part.

Boiler means an enclosed fossil or other fuel-fired combustion device used to produce heat and to transfer heat to recirculating water, steam, or other medium.

CAA means the CAA, 42 U.S.C. 7401, *et seq.*, as amended by Pub. L. No. 101–549 (November 15, 1990).

Combined cycle system means a system comprised of one or more combustion turbines, heat recovery steam generators, and steam turbines configured to improve overall efficiency of electricity generation or steam production.

Combustion turbine means an enclosed fossil or other fuel-fired device that is comprised of a compressor, a combustor, and a turbine, and in which the flue gas resulting from the combustion of fuel in the combustor passes through the turbine, rotating the turbine.

Commence commercial operation means, with regard to a unit that serves a generator, to have begun to produce steam, gas, or other heated medium used to generate electricity for sale or use, including test generation. Except as provided in § 96.5, for a unit that is a NO_X Budget unit under § 96.4 on the date the unit commences commercial operation, such date shall remain the unit's date of commencement of commercial operation even if the unit is subsequently modified, reconstructed, or repowered. Except as provided in § 96.5 or subpart I of this part, for a unit that is not a NO_X Budget unit under § 96.4 on the date the unit commences commercial operation, the date the unit becomes a NO_X Budget unit under § 96.4 shall be the unit's date of commencement of commercial operation.

Commence operation means to have begun any mechanical, chemical, or electronic process, including, with regard to a unit, start-up of a unit's combustion chamber. Except as provided in § 96.5, for a unit that is a NO_X Budget unit under § 96.4 on the date of commencement of operation, such date shall remain the unit's date of commencement of operation even if the unit is subsequently modified, reconstructed, or repowered. Except as provided in § 96.5 or subpart I of this part, for a unit that is not a NO_X Budget unit under § 96.4 on the date of commencement of operation, the date the unit becomes a NO_X Budget unit under § 96.4 shall be the unit's date of commencement of operation.

Common stack means a single flue through which emissions from two or more units are exhausted.

Compliance account means a NO_X Allowance Tracking System account, established by the Administrator for a NO_X Budget unit under subpart F of this part, in which the NO_X allowance allocations for the unit are initially recorded and in which are held NO_X allowances available for use by the unit for a control period for the purpose of meeting the unit's NO_X Budget emissions limitation.

Compliance certification means a submission to the permitting authority or the Administrator, as appropriate, that is required under subpart D of this part to report a NO_X Budget source's or a NO_X Budget unit's compliance or noncompliance with this part and that is signed by the NO_X authorized account representative in accordance with subpart B of this part.

Continuous emission monitoring system or *CEMS* means the equipment required under subpart H of this part to sample,

analyze, measure, and provide, by readings taken at least once every 15 minutes of the measured parameters, a permanent record of nitrogen oxides emissions, expressed in tons per hour for nitrogen oxides. The following systems are component parts included, consistent with part 75 of this chapter, in a continuous emission monitoring system:

(1) Flow monitor;

(2) Nitrogen oxides pollutant concentration monitors;

(3) Diluent gas monitor (oxygen or carbon dioxide) when such monitoring is required by subpart H of this part;

(4) A continuous moisture monitor when such monitoring is required by subpart H of this part; and

(5) An automated data acquisition and handling system.

Control period means the period beginning May 1 of a year and ending on September 30 of the same year, inclusive.

Emissions means air pollutants exhausted from a unit or source into the atmosphere, as measured, recorded, and reported to the Administrator by the NO_X authorized account representative and as determined by the Administrator in accordance with subpart H of this part.

Energy Information Administration means the Energy Information Administration of the United States Department of Energy.

Excess emissions means any tonnage of nitrogen oxides emitted by a NO_X Budget unit during a control period that exceeds the NO_X Budget emissions limitation for the unit.

Fossil fuel means natural gas, petroleum, coal, or any form of solid, liquid, or gaseous fuel derived from such material.

Fossil fuel-fired means, with regard to a unit:

(1) The combustion of fossil fuel, alone or in combination with any other fuel, where fossil fuel actually combusted comprises more than 50 percent of the annual heat input on a Btu basis during any year starting in 1995 or, if a unit had no heat input starting in 1995, during the last year of operation of the unit prior to 1995; or

(2) The combustion of fossil fuel, alone or in combination with any other fuel, where fossil fuel is projected to comprise more than 50 percent of the annual heat input on a Btu basis during any year; provided that the unit shall be ''fossil fuel-fired'' as of the date, during such year, on which the unit begins combusting fossil fuel.

General account means a NO_X Allowance Tracking System account, established under subpart F of this part, that is not a compliance account or an overdraft account.

Generator means a device that produces electricity.

Heat input means the product (in mmBtu/time) of the gross calorific value of the fuel (in Btu/lb) and the fuel feed rate into a combustion device (in mass of fuel/time), as measured, recorded, and reported to the Administrator by the NO_X authorized account representative and as determined by the Administrator in accordance with subpart H of this part, and does not include the heat derived from preheated combustion air, recirculated flue gases, or exhaust from other sources.

Life-of-the-unit, firm power contractual arrangement means a unit participation power sales agreement under which a utility or industrial customer reserves, or is entitled to receive, a specified amount or percentage of nameplate capacity and associated energy from any specified unit and pays its proportional amount of such unit's total costs, pursuant to a contract:

(1) For the life of the unit;

(2) For a cumulative term of no less than 30 years, including contracts that permit an election for early termination; or

(3) For a period equal to or greater than 25 years or 70 percent of the economic useful life of the unit determined as of the time the unit is built, with option rights to purchase or release some portion of the nameplate capacity and associated energy generated by the unit at the end of the period.

Maximum design heat input means the ability of a unit to combust a stated maximum amount of fuel per hour on a steady state basis, as determined by the physical design and physical characteristics of the unit.

Maximum potential hourly heat input means an hourly heat input used for reporting purposes when a unit lacks certified monitors to report heat input. If the unit intends to use appendix D of part 75 of this chapter to report heat input, this value should be calculated, in accordance with part 75 of this chapter, using the maximum fuel flow rate and the maximum gross calorific value. If the unit intends to use a flow monitor and a diluent gas monitor, this value should be reported, in accordance with part 75 of this chapter, using the maximum potential flowrate and either the maximum carbon dioxide concentration (in percent CO_2) or the minimum oxygen concentration (in percent O_2).

Maximum potential NO_X emission rate means the emission rate of nitrogen oxides (in lb/mmBtu) calculated in accordance with section 3 of appendix F of part 75 of this chapter, using the maximum potential nitrogen oxides concentration as defined in section 2 of appendix A of part 75 of this chapter, and either the maximum oxygen concentration (in percent O_2) or the minimum carbon dioxide concentration (in percent CO_2), under all operating conditions of the unit except for unit start up, shutdown, and upsets.

Maximum rated hourly heat input means a unit-specific maximum hourly heat input (mmBtu) which is the higher of the manufacturer's maximum rated hourly heat input or the highest observed hourly heat input.

Monitoring system means any monitoring system that meets the requirements of subpart H of this part, including a continuous emissions monitoring system, an excepted monitoring system, or an alternative monitoring system.

Most stringent State or Federal NO_X emissions limitation means, with regard to a NO_X Budget opt-in source, the lowest NO_X emissions limitation (in terms of lb/mmBtu) that is applicable to the unit under State or Federal law, regardless of the averaging period to which the emissions limitation applies.

Nameplate capacity means the maximum electrical generating output (in MWe) that a generator can sustain over a specified period of time when not restricted by seasonal or other deratings as measured in accordance with the United States Department of Energy standards.

Non-title V permit means a federally enforceable permit administered by the permitting authority pursuant to the CAA and regulatory authority under the CAA, other than title V of the CAA and part 70 or 71 of this chapter.

NO_X allowance means an authorization by the permitting authority or the Administrator under the NO_X Budget Trading Program to emit up to one ton of nitrogen oxides during the control period of the specified year or of any year thereafter.

NO_X allowance deduction or *deduct NO_X allowances* means the permanent withdrawal of NO_X allowances by the Administrator from a NO_X Allowance Tracking System compliance account or overdraft account to account for the number of tons of NO_X emissions from a NO_X Budget unit for a control period, determined in accordance with subpart H of this part, or for any other allowance surrender obligation under this part.

NO_X allowances held or *hold NO_X allowances* means the NO_X allowances recorded by the Administrator, or submitted to the Administrator for recordation, in accordance with subparts F and G of this part, in a NO_X Allowance Tracking System account.

NO_X Allowance Tracking System means the system by which the Administrator records allocations, deductions, and transfers of NO_X allowances under the NO_X Budget Trading Program.

NO_X Allowance Tracking System account means an account in the NO_X Allowance Tracking System established by the Administrator for purposes of recording the allocation, holding, transferring, or deducting of NO_X allowances.

NO_X allowance transfer deadline means midnight of November 30 or, if November 30 is not a business day, midnight of the first business day thereafter and is the deadline by which NO_X allowances may be submitted for recordation in a NO_X Budget unit's compliance account, or the overdraft account of the source where the unit is located, in order to meet the unit's NO_X Budget

emissions limitation for the control period immediately preceding such deadline.

NO_X authorized account representative means, for a NO_X Budget source or NO_X Budget unit at the source, the natural person who is authorized by the owners and operators of the source and all NO_X Budget units at the source, in accordance with subpart B of this part, to represent and legally bind each owner and operator in matters pertaining to the NO_X Budget Trading Program or, for a general account, the natural person who is authorized, in accordance with subpart F of this part, to transfer or otherwise dispose of NO_X allowances held in the general account.

NO_X Budget emissions limitation means, for a NO_X Budget unit, the tonnage equivalent of the NO_X allowances available for compliance deduction for the unit and for a control period under §96.54(a) and (b), adjusted by any deductions of such NO_X allowances to account for actual utilization under §96.42(e) for the control period or to account for excess emissions for a prior control period under §96.54(d) or to account for withdrawal from the NO_X Budget Program, or for a change in regulatory status, for a NO_X Budget opt-in source under §96.86 or §96.87.

NO_X Budget opt-in permit means a NO_X Budget permit covering a NO_X Budget opt-in source.

NO_X Budget opt-in source means a unit that has been elected to become a NO_X Budget unit under the NO_X Budget Trading Program and whose NO_X Budget opt-in permit has been issued and is in effect under subpart I of this part.

NO_X Budget permit means the legally binding and federally enforceable written document, or portion of such document, issued by the permitting authority under this part, including any permit revisions, specifying the NO_X Budget Trading Program requirements applicable to a NO_X Budget source, to each NO_X Budget unit at the NO_X Budget source, and to the owners and operators and the NO_X authorized account representative of the NO_X Budget source and each NO_X Budget unit.

NO_X Budget source means a source that includes one or more NO_X Budget units.

NO_X Budget Trading Program means a multi-state nitrogen oxides air pollution control and emission reduction program established in accordance with this part and pursuant to §51.121 of this chapter, as a means of mitigating the interstate transport of ozone and nitrogen oxides, an ozone precursor.

NO_X Budget unit means a unit that is subject to the NO_X Budget Trading Program emissions limitation under §96.4 or §96.80.

Operating means, with regard to a unit under §§96.22(d)(2) and 96.80, having documented heat input for more than 876 hours in the 6 months immediately preceding the submission of an application for an initial NO_X Budget permit under §96.83(a).

Operator means any person who operates, controls, or supervises a NO_X Budget unit, a NO_X Budget source, or unit for which an application for a NO_X Budget opt-in permit under §96.83 is submitted and not denied or withdrawn and shall include, but not be limited to, any holding company, utility system, or plant manager of such a unit or source.

Opt-in means to be elected to become a NO_X Budget unit under the NO_X Budget Trading Program through a final, effective NO_X Budget opt-in permit under subpart I of this part.

Overdraft account means the NO_X Allowance Tracking System account, established by the Administrator under subpart F of this part, for each NO_X Budget source where there are two or more NO_X Budget units.

Owner means any of the following persons:

(1) Any holder of any portion of the legal or equitable title in a NO_X Budget unit or in a unit for which an application for a NO_X Budget opt-in permit under §96.83 is submitted and not denied or withdrawn; or

(2) Any holder of a leasehold interest in a NO_X Budget unit or in a unit for which an application for a NO_X Budget opt-in permit under §96.83 is submitted and not denied or withdrawn; or

(3) Any purchaser of power from a NO_X Budget unit or from a unit for which an application for a NO_X Budget opt-in permit under §96.83 is submitted and not denied or withdrawn under a

life-of-the-unit, firm power contractual arrangement. However, unless expressly provided for in a leasehold agreement, owner shall not include a passive lessor, or a person who has an equitable interest through such lessor, whose rental payments are not based, either directly or indirectly, upon the revenues or income from the NO_X Budget unit or the unit for which an application for a NO_X Budget opt-in permit under § 96.83 is submitted and not denied or withdrawn; or

(4) With respect to any general account, any person who has an ownership interest with respect to the NO_X allowances held in the general account and who is subject to the binding agreement for the NO_X authorized account representative to represent that person's ownership interest with respect to NO_X allowances.

Permitting authority means the State air pollution control agency, local agency, other State agency, or other agency authorized by the Administrator to issue or revise permits to meet the requirements of the NO_X Budget Trading Program in accordance with subpart C of this part.

Receive or receipt of means, when referring to the permitting authority or the Administrator, to come into possession of a document, information, or correspondence (whether sent in writing or by authorized electronic transmission), as indicated in an official correspondence log, or by a notation made on the document, information, or correspondence, by the permitting authority or the Administrator in the regular course of business.

Recordation, record, or recorded means, with regard to NO_X allowances, the movement of NO_X allowances by the Administrator from one NO_X Allowance Tracking System account to another, for purposes of allocation, transfer, or deduction.

Reference method means any direct test method of sampling and analyzing for an air pollutant as specified in appendix A of part 60 of this chapter.

Serial number means, when referring to NO_X allowances, the unique identification number assigned to each NO_X allowance by the Administrator, under § 96.53(c).

Source means any governmental, institutional, commercial, or industrial structure, installation, plant, building, or facility that emits or has the potential to emit any regulated air pollutant under the CAA. For purposes of section 502(c) of the CAA, a ''source,'' including a ''source'' with multiple units, shall be considered a single ''facility.''

State means one of the 48 contiguous States and the District of Columbia specified in § 51.121 of this chapter, or any non-federal authority in or including such States or the District of Columbia (including local agencies, and Statewide agencies) or any eligible Indian tribe in an area of such State or the District of Columbia, that adopts a NO_X Budget Trading Program pursuant to § 51.121 of this chapter. To the extent a State incorporates by reference the provisions of this part, the term ''State'' shall mean the incorporating State. The term ''State'' shall have its conventional meaning where such meaning is clear from the context.

State trading program budget means the total number of NO_X tons apportioned to all NO_X Budget units in a given State, in accordance with the NO_X Budget Trading Program, for use in a given control period.

Submit or serve means to send or transmit a document, information, or correspondence to the person specified in accordance with the applicable regulation:

(1) In person;

(2) By United States Postal Service; or

(3) By other means of dispatch or transmission and delivery. Compliance with any ''submission,'' ''service,'' or ''mailing'' deadline shall be determined by the date of dispatch, transmission, or mailing and not the date of receipt.

Title V operating permit means a permit issued under title V of the CAA and part 70 or part 71 of this chapter.

Title V operating permit regulations means the regulations that the Administrator has approved or issued as meeting the requirements of title V of the CAA and part 70 or 71 of this chapter.

Ton or tonnage means any ''short ton'' (i.e., 2,000 pounds). For the purpose of determining compliance with the NO_X Budget emissions limitation,

total tons for a control period shall be calculated as the sum of all recorded hourly emissions (or the tonnage equivalent of the recorded hourly emissions rates) in accordance with subpart H of this part, with any remaining fraction of a ton equal to or greater than 0.50 ton deemed to equal one ton and any fraction of a ton less than 0.50 ton deemed to equal zero tons.

Unit means a fossil fuel-fired stationary boiler, combustion turbine, or combined cycle system.

Unit load means the total (i.e., gross) output of a unit in any control period (or other specified time period) produced by combusting a given heat input of fuel, expressed in terms of:

(1) The total electrical generation (MWe) produced by the unit, including generation for use within the plant; or

(2) In the case of a unit that uses heat input for purposes other than electrical generation, the total steam pressure (psia) produced by the unit, including steam for use by the unit.

Unit operating day means a calendar day in which a unit combusts any fuel.

Unit operating hour or *hour of unit operation* means any hour (or fraction of an hour) during which a unit combusts any fuel.

Utilization means the heat input (expressed in mmBtu/time) for a unit. The unit's total heat input for the control period in each year will be determined in accordance with part 75 of this chapter if the NO_X Budget unit was otherwise subject to the requirements of part 75 of this chapter for the year, or will be based on the best available data reported to the Administrator for the unit if the unit was not otherwise subject to the requirements of part 75 of this chapter for the year.

§96.3 Measurements, abbreviations, and acronyms.

Measurements, abbreviations, and acronyms used in this part are defined as follows:

Btu—British thermal unit.
hr—hour.
Kwh—kilowatt hour.
lb—pounds.
mmBtu—million Btu.
MWe—megawatt electrical.
ton—2000 pounds.
CO_2—carbon dioxide.
NO_X—nitrogen oxides.
O_2—oxygen.

§96.4 Applicability.

(a) The following units in a State shall be NO_X Budget units, and any source that includes one or more such units shall be a NO_X Budget source, subject to the requirements of this part:

(1) Any unit that, any time on or after January 1, 1995, serves a generator with a nameplate capacity greater than 25 MWe and sells any amount of electricity; or

(2) Any unit that is not a unit under paragraph (a) of this section and that has a maximum design heat input greater than 250 mmBtu/hr.

(b) Notwithstanding paragraph (a) of this section, a unit under paragraph (a) of this section shall be subject only to the requirements of this paragraph (b) if the unit has a federally enforceable permit that meets the requirements of paragraph (b)(1) of this section and restricts the unit to burning only natural gas or fuel oil during a control period in 2003 or later and each control period thereafter and restricts the unit's operating hours during each such control period to the number of hours (determined in accordance with paragraph (b)(1)(ii) and (iii) of this section) that limits the unit's potential NO_X mass emissions for the control period to 25 tons or less. Notwithstanding paragraph (a) of this section, starting with the effective date of such federally enforceable permit, the unit shall not be a NO_X Budget unit.

(1) For each control period under paragraph (b) of this section, the federally enforceable permit must:

(i) Restrict the unit to burning only natural gas or fuel oil.

(ii) Restrict the unit's operating hours to the number calculated by dividing 25 tons of potential NO_X mass emissions by the unit's maximum potential hourly NO_X mass emissions.

(iii) Require that the unit's potential NO_X mass emissions shall be calculated as follows:

(A) Select the default NO_X emission rate in Table 2 of §75.19 of this chapter that would otherwise be applicable assuming that the unit burns only the type of fuel (i.e., only natural gas or

only fuel oil) that has the highest default NO_X emission factor of any type of fuel that the unit is allowed to burn under the fuel use restriction in paragraph (b)(1)(i) of this section; and

(B) Multiply the default NO_X emission rate under paragraph (b)(1)(iii)(A) of this section by the unit's maximum rated hourly heat input. The owner or operator of the unit may petition the permitting authority to use a lower value for the unit's maximum rated hourly heat input than the value as defined under § 96.2. The permitting authority may approve such lower value if the owner or operator demonstrates that the maximum hourly heat input specified by the manufacturer or the highest observed hourly heat input, or both, are not representative, and that such lower value is representative, of the unit's current capabilities because modifications have been made to the unit, limiting its capacity permanently.

(iv) Require that the owner or operator of the unit shall retain at the source that includes the unit, for 5 years, records demonstrating that the operating hours restriction, the fuel use restriction, and the other requirements of the permit related to these restrictions were met.

(v) Require that the owner or operator of the unit shall report the unit's hours of operation (treating any partial hour of operation as a whole hour of operation) during each control period to the permitting authority by November 1 of each year for which the unit is subject to the federally enforceable permit.

(2) The permitting authority that issues the federally enforceable permit with the fuel use restriction under paragraph (b)(1)(i) and the operating hours restriction under paragraphs (b)(1)(ii) and (iii) of this section will notify the Administrator in writing of each unit under paragraph (a) of this section whose federally enforceable permit issued by the permitting authority includes such restrictions. The permitting authority will also notify the Administrator in writing of each unit under paragraph (a) of this section whose federally enforceable permit issued by the permitting authority is revised to remove any such restriction, whose federally enforceable permit issued by the permitting authority includes any such restriction that is no longer applicable, or which does not comply with any such restriction.

(3) If, for any control period under paragraph (b) of this section, the fuel use restriction under paragraph (b)(1)(i) of this section or the operating hours restriction under paragraphs (b)(1)(ii) and (iii) of this section is removed from the unit's federally enforceable permit or otherwise becomes no longer applicable or if, for any such control period, the unit does not comply with the fuel use restriction under paragraph (b)(1)(i) of this section or the operating hours restriction under paragraphs (b)(1)(ii) and (iii) of this section, the unit shall be a NO_X Budget unit, subject to the requirements of this part. Such unit shall be treated as commencing operation and, for a unit under paragraph (a)(1) of this section, commencing commercial operation on September 30 of the control period for which the fuel use restriction or the operating hours restriction is no longer applicable or during which the unit does not comply with the fuel use restriction or the operating hours restriction.

§ 96.5 Retired unit exemption.

(a) This section applies to any NO_X Budget unit, other than a NO_X Budget opt-in source, that is permanently retired.

(b)(1) Any NO_X Budget unit, other than a NO_X Budget opt-in source, that is permanently retired shall be exempt from the NO_X Budget Trading Program, except for the provisions of this section, §§ 96.2, 96.3, 96.4, 96.7 and subparts E, F, and G of this part.

(2) The exemption under paragraph (b)(1) of this section shall become effective the day on which the unit is permanently retired. Within 30 days of permanent retirement, the NO_X authorized account representative (authorized in accordance with subpart B of this part) shall submit a statement to the permitting authority otherwise responsible for administering any NO_X Budget permit for the unit. A copy of the statement shall be submitted to the Administrator. The statement shall state (in a format prescribed by the permitting authority) that the unit is

permanently retired and will comply with the requirements of paragraph (c) of this section.

(3) After receipt of the notice under paragraph (b)(2) of this section, the permitting authority will amend any permit covering the source at which the unit is located to add the provisions and requirements of the exemption under paragraphs (b)(1) and (c) of this section.

(c) *Special provisions*. (1) A unit exempt under this section shall not emit any nitrogen oxides, starting on the date that the exemption takes effect. The owners and operators of the unit will be allocated allowances in accordance with subpart E of this part.

(2)(i) A unit exempt under this section and located at a source that is required, or but for this exemption would be required, to have a title V operating permit shall not resume operation unless the NO_X authorized account representative of the source submits a complete NO_X Budget permit application under §96.22 for the unit not less than 18 months (or such lesser time provided under the permitting authority's title V operating permits regulations for final action on a permit application) prior to the later of May 1, 2003 or the date on which the unit is to first resume operation.

(ii) A unit exempt under this section and located at a source that is required, or but for this exemption would be required, to have a non-title V permit shall not resume operation unless the NO_X authorized account representative of the source submits a complete NO_X Budget permit application under §96.22 for the unit not less than 18 months (or such lesser time provided under the permitting authority's non-title V permits regulations for final action on a permit application) prior to the later of May 1, 2003 or the date on which the unit is to first resume operation.

(3) The owners and operators and, to the extent applicable, the NO_X authorized account representative of a unit exempt under this section shall comply with the requirements of the NO_X Budget Trading Program concerning all periods for which the exemption is not in effect, even if such requirements arise, or must be complied with, after the exemption takes effect.

(4) A unit that is exempt under this section is not eligible to be a NO_X Budget opt-in source under subpart I of this part.

(5) For a period of 5 years from the date the records are created, the owners and operators of a unit exempt under this section shall retain at the source that includes the unit, records demonstrating that the unit is permanently retired. The 5-year period for keeping records may be extended for cause, at any time prior to the end of the period, in writing by the permitting authority or the Administrator. The owners and operators bear the burden of proof that the unit is permanently retired.

(6) *Loss of exemption*. (i) On the earlier of the following dates, a unit exempt under paragraph (b) of this section shall lose its exemption:

(A) The date on which the NO_X authorized account representative submits a NO_X Budget permit application under paragraph (c)(2) of this section; or

(B) The date on which the NO_X authorized account representative is required under paragraph (c)(2) of this section to submit a NO_X Budget permit application.

(ii) For the purpose of applying monitoring requirements under subpart H of this part, a unit that loses its exemption under this section shall be treated as a unit that commences operation or commercial operation on the first date on which the unit resumes operation.

§96.6 Standard requirements.

(a) *Permit Requirements*. (1) The NO_X authorized account representative of each NO_X Budget source required to have a federally enforceable permit and each NO_X Budget unit required to have a federally enforceable permit at the source shall:

(i) Submit to the permitting authority a complete NO_X Budget permit application under §96.22 in accordance with the deadlines specified in §96.21(b) and (c);

(ii) Submit in a timely manner any supplemental information that the permitting authority determines is necessary in order to review a NO_X Budget

permit application and issue or deny a NO_X Budget permit.

(2) The owners and operators of each NO_X Budget source required to have a federally enforceable permit and each NO_X Budget unit required to have a federally enforceable permit at the source shall have a NO_X Budget permit issued by the permitting authority and operate the unit in compliance with such NO_X Budget permit.

(3) The owners and operators of a NO_X Budget source that is not otherwise required to have a federally enforceable permit are not required to submit a NO_X Budget permit application, and to have a NO_X Budget permit, under subpart C of this part for such NO_X Budget source.

(b) *Monitoring requirements.* (1) The owners and operators and, to the extent applicable, the NO_X authorized account representative of each NO_X Budget source and each NO_X Budget unit at the source shall comply with the monitoring requirements of subpart H of this part.

(2) The emissions measurements recorded and reported in accordance with subpart H of this part shall be used to determine compliance by the unit with the NO_X Budget emissions limitation under paragraph (c) of this section.

(c) *Nitrogen oxides requirements.* (1) The owners and operators of each NO_X Budget source and each NO_X Budget unit at the source shall hold NO_X allowances available for compliance deductions under § 96.54, as of the NO_X allowance transfer deadline, in the unit's compliance account and the source's overdraft account in an amount not less than the total NO_X emissions for the control period from the unit, as determined in accordance with subpart H of this part, plus any amount necessary to account for actual utilization under § 96.42(e) for the control period.

(2) Each ton of nitrogen oxides emitted in excess of the NO_X Budget emissions limitation shall constitute a separate violation of this part, the CAA, and applicable State law.

(3) A NO_X Budget unit shall be subject to the requirements under paragraph (c)(1) of this section starting on the later of May 1, 2003 or the date on which the unit commences operation.

(4) NO_X allowances shall be held in, deducted from, or transferred among NO_X Allowance Tracking System accounts in accordance with subparts E, F, G, and I of this part.

(5) A NO_X allowance shall not be deducted, in order to comply with the requirements under paragraph (c)(1) of this section, for a control period in a year prior to the year for which the NO_X allowance was allocated.

(6) A NO_X allowance allocated by the permitting authority or the Administrator under the NO_X Budget Trading Program is a limited authorization to emit one ton of nitrogen oxides in accordance with the NO_X Budget Trading Program. No provision of the NO_X Budget Trading Program, the NO_X Budget permit application, the NO_X Budget permit, or an exemption under § 96.5 and no provision of law shall be construed to limit the authority of the United States or the State to terminate or limit such authorization.

(7) A NO_X allowance allocated by the permitting authority or the Administrator under the NO_X Budget Trading Program does not constitute a property right.

(8) Upon recordation by the Administrator under subpart F, G, or I of this part, every allocation, transfer, or deduction of a NO_X allowance to or from a NO_X Budget unit's compliance account or the overdraft account of the source where the unit is located is deemed to amend automatically, and become a part of, any NO_X Budget permit of the NO_X Budget unit by operation of law without any further review.

(d) *Excess emissions requirements.* (1) The owners and operators of a NO_X Budget unit that has excess emissions in any control period shall:

(i) Surrender the NO_X allowances required for deduction under § 96.54(d)(1); and

(ii) Pay any fine, penalty, or assessment or comply with any other remedy imposed under § 96.54(d)(3).

(e) *Recordkeeping and Reporting requirements.* (1) Unless otherwise provided, the owners and operators of the NO_X Budget source and each NO_X Budget unit at the source shall keep on site at the source each of the following documents for a period of 5 years from the

date the document is created. This period may be extended for cause, at any time prior to the end of 5 years, in writing by the permitting authority or the Administrator.

(i) The account certificate of representation for the NO_X authorized account representative for the source and each NO_X Budget unit at the source and all documents that demonstrate the truth of the statements in the account certificate of representation, in accordance with §96.13; provided that the certificate and documents shall be retained on site at the source beyond such 5-year period until such documents are superseded because of the submission of a new account certificate of representation changing the NO_X authorized account representative.

(ii) All emissions monitoring information, in accordance with subpart H of this part; provided that to the extent that subpart H of this part provides for a 3-year period for recordkeeping, the 3-year period shall apply.

(iii) Copies of all reports, compliance certifications, and other submissions and all records made or required under the NO_X Budget Trading Program.

(iv) Copies of all documents used to complete a NO_X Budget permit application and any other submission under the NO_X Budget Trading Program or to demonstrate compliance with the requirements of the NO_X Budget Trading Program.

(2) The NO_X authorized account representative of a NO_X Budget source and each NO_X Budget unit at the source shall submit the reports and compliance certifications required under the NO_X Budget Trading Program, including those under subparts D, H, or I of this part.

(f) *Liability*. (1) Any person who knowingly violates any requirement or prohibition of the NO_X Budget Trading Program, a NO_X Budget permit, or an exemption under §96.5 shall be subject to enforcement pursuant to applicable State or Federal law.

(2) Any person who knowingly makes a false material statement in any record, submission, or report under the NO_X Budget Trading Program shall be subject to criminal enforcement pursuant to the applicable State or Federal law.

(3) No permit revision shall excuse any violation of the requirements of the NO_X Budget Trading Program that occurs prior to the date that the revision takes effect.

(4) Each NO_X Budget source and each NO_X Budget unit shall meet the requirements of the NO_X Budget Trading Program.

(5) Any provision of the NO_X Budget Trading Program that applies to a NO_X Budget source (including a provision applicable to the NO_X authorized account representative of a NO_X Budget source) shall also apply to the owners and operators of such source and of the NO_X Budget units at the source.

(6) Any provision of the NO_X Budget Trading Program that applies to a NO_X Budget unit (including a provision applicable to the NO_X authorized account representative of a NO_X budget unit) shall also apply to the owners and operators of such unit. Except with regard to the requirements applicable to units with a common stack under subpart H of this part, the owners and operators and the NO_X authorized account representative of one NO_X Budget unit shall not be liable for any violation by any other NO_X Budget unit of which they are not owners or operators or the NO_X authorized account representative and that is located at a source of which they are not owners or operators or the NO_X authorized account representative.

(g) *Effect on other authorities*. No provision of the NO_X Budget Trading Program, a NO_X Budget permit application, a NO_X Budget permit, or an exemption under §96.5 shall be construed as exempting or excluding the owners and operators and, to the extent applicable, the NO_X authorized account representative of a NO_X Budget source or NO_X Budget unit from compliance with any other provision of the applicable, approved State implementation plan, a federally enforceable permit, or the CAA.

§96.7 Computation of time.

(a) Unless otherwise stated, any time period scheduled, under the NO_X Budget Trading Program, to begin on the occurrence of an act or event shall begin on the day the act or event occurs.

(b) Unless otherwise stated, any time period scheduled, under the NO_X Budget Trading Program, to begin before the occurrence of an act or event shall be computed so that the period ends the day before the act or event occurs.

(c) Unless otherwise stated, if the final day of any time period, under the NO_X Budget Trading Program, falls on a weekend or a State or Federal holiday, the time period shall be extended to the next business day.

Subpart B—NO_X Authorized Account Representative for NO_X Budget Sources

§ 96.10 Authorization and responsibilities of the NO_X authorized account representative.

(a) Except as provided under § 96.11, each NO_X Budget source, including all NO_X Budget units at the source, shall have one and only one NO_X authorized account representative, with regard to all matters under the NO_X Budget Trading Program concerning the source or any NO_X Budget unit at the source.

(b) The NO_X authorized account representative of the NO_X Budget source shall be selected by an agreement binding on the owners and operators of the source and all NO_X Budget units at the source.

(c) Upon receipt by the Administrator of a complete account certificate of representation under § 96.13, the NO_X authorized account representative of the source shall represent and, by his or her representations, actions, inactions, or submissions, legally bind each owner and operator of the NO_X Budget source represented and each NO_X Budget unit at the source in all matters pertaining to the NO_X Budget Trading Program, not withstanding any agreement between the NO_X authorized account representative and such owners and operators. The owners and operators shall be bound by any decision or order issued to the NO_X authorized account representative by the permitting authority, the Administrator, or a court regarding the source or unit.

(d) No NO_X Budget permit shall be issued, and no NO_X Allowance Tracking System account shall be established for a NO_X Budget unit at a source, until the Administrator has received a complete account certificate of representation under § 96.13 for a NO_X authorized account representative of the source and the NO_X Budget units at the source.

(e)(1) Each submission under the NO_X Budget Trading Program shall be submitted, signed, and certified by the NO_X authorized account representative for each NO_X Budget source on behalf of which the submission is made. Each such submission shall include the following certification statement by the NO_X authorized account representative: ''I am authorized to make this submission on behalf of the owners and operators of the NO_X Budget sources or NO_X Budget units for which the submission is made. I certify under penalty of law that I have personally examined, and am familiar with, the statements and information submitted in this document and all its attachments. Based on my inquiry of those individuals with primary responsibility for obtaining the information, I certify that the statements and information are to the best of my knowledge and belief true, accurate, and complete. I am aware that there are significant penalties for submitting false statements and information or omitting required statements and information, including the possibility of fine or imprisonment.''

(2) The permitting authority and the Administrator will accept or act on a submission made on behalf of owner or operators of a NO_X Budget source or a NO_X Budget unit only if the submission has been made, signed, and certified in accordance with paragraph (e)(1) of this section.

§ 96.11 Alternate NO_X authorized account representative.

(a) An account certificate of representation may designate one and only one alternate NO_X authorized account representative who may act on behalf of the NO_X authorized account representative. The agreement by which the alternate NO_X authorized account representative is selected shall include a procedure for authorizing the alternate NO_X authorized account representative to act in lieu of the NO_X authorized account representative.

(b) Upon receipt by the Administrator of a complete account certificate of representation under §96.13, any representation, action, inaction, or submission by the alternate NO_X authorized account representative shall be deemed to be a representation, action, inaction, or submission by the NO_X authorized account representative.

(c) Except in this section and §§96.10(a), 96.12, 96.13, and 96.51, whenever the term ''NO_X authorized account representative'' is used in this part, the term shall be construed to include the alternate NO_X authorized account representative.

§96.12 Changing the NO_X authorized account representative and the alternate NO_X authorized account representative; changes in the owners and operators.

(a) *Changing the NO_X authorized account representative.* The NO_X authorized account representative may be changed at any time upon receipt by the Administrator of a superseding complete account certificate of representation under §96.13. Notwithstanding any such change, all representations, actions, inactions, and submissions by the previous NO_X authorized account representative prior to the time and date when the Administrator receives the superseding account certificate of representation shall be binding on the new NO_X authorized account representative and the owners and operators of the NO_X Budget source and the NO_X Budget units at the source.

(b) Changing the alternate NO_X authorized account representative. The alternate NO_X authorized account representative may be changed at any time upon receipt by the Administrator of a superseding complete account certificate of representation under §96.13. Notwithstanding any such change, all representations, actions, inactions, and submissions by the previous alternate NO_X authorized account representative prior to the time and date when the Administrator receives the superseding account certificate of representation shall be binding on the new alternate NO_X authorized account representative and the owners and operators of the NO_X Budget source and the NO_X Budget units at the source.

(c) *Changes in the owners and operators.* (1) In the event a new owner or operator of a NO_X Budget source or a NO_X Budget unit is not included in the list of owners and operators submitted in the account certificate of representation, such new owner or operator shall be deemed to be subject to and bound by the account certificate of representation, the representations, actions, inactions, and submissions of the NO_X authorized account representative and any alternate NO_X authorized account representative of the source or unit, and the decisions, orders, actions, and inactions of the permitting authority or the Administrator, as if the new owner or operator were included in such list.

(2) Within 30 days following any change in the owners and operators of a NO_X Budget source or a NO_X Budget unit, including the addition of a new owner or operator, the NO_X authorized account representative or alternate NO_X authorized account representative shall submit a revision to the account certificate of representation amending the list of owners and operators to include the change.

§96.13 Account certificate of representation.

(a) A complete account certificate of representation for a NO_X authorized account representative or an alternate NO_X authorized account representative shall include the following elements in a format prescribed by the Administrator:

(1) Identification of the NO_X Budget source and each NO_X Budget unit at the source for which the account certificate of representation is submitted.

(2) The name, address, e-mail address (if any), telephone number, and facsimile transmission number (if any) of the NO_X authorized account representative and any alternate NO_X authorized account representative.

(3) A list of the owners and operators of the NO_X Budget source and of each NO_X Budget unit at the source.

(4) The following certification statement by the NO_X authorized account representative and any alternate NO_X authorized account representative: ''I certify that I was selected as the NO_X authorized account representative or

alternate NO_X authorized account representative, as applicable, by an agreement binding on the owners and operators of the NO_X Budget source and each NO_X Budget unit at the source. I certify that I have all the necessary authority to carry out my duties and responsibilities under the NO_X Budget Trading Program on behalf of the owners and operators of the NO_X Budget source and of each NO_X Budget unit at the source and that each such owner and operator shall be fully bound by my representations, actions, inactions, or submissions and by any decision or order issued to me by the permitting authority, the Administrator, or a court regarding the source or unit.''

(5) The signature of the NO_X authorized account representative and any alternate NO_X authorized account representative and the dates signed.

(b) Unless otherwise required by the permitting authority or the Administrator, documents of agreement referred to in the account certificate of representation shall not be submitted to the permitting authority or the Administrator. Neither the permitting authority nor the Administrator shall be under any obligation to review or evaluate the sufficiency of such documents, if submitted.

§ 96.14 Objections concerning the NO_X authorized account representative.

(a) Once a complete account certificate of representation under § 96.13 has been submitted and received, the permitting authority and the Administrator will rely on the account certificate of representation unless and until a superseding complete account certificate of representation under § 96.13 is received by the Administrator.

(b) Except as provided in § 96.12(a) or (b), no objection or other communication submitted to the permitting authority or the Administrator concerning the authorization, or any representation, action, inaction, or submission of the NO_X authorized account representative shall affect any representation, action, inaction, or submission of the NO_X authorized account representative or the finality of any decision or order by the permitting authority or the Administrator under the NO_X Budget Trading Program.

(c) Neither the permitting authority nor the Administrator will adjudicate any private legal dispute concerning the authorization or any representation, action, inaction, or submission of any NO_X authorized account representative, including private legal disputes concerning the proceeds of NO_X allowance transfers.

Subpart C—Permits

§ 96.20 General NO_X Budget trading program permit requirements.

(a) For each NO_X Budget source required to have a federally enforceable permit, such permit shall include a NO_X Budget permit administered by the permitting authority.

(1) For NO_X Budget sources required to have a title V operating permit, the NO_X Budget portion of the title V permit shall be administered in accordance with the permitting authority's title V operating permits regulations promulgated under part 70 or 71 of this chapter, except as provided otherwise by this subpart or subpart I of this part. The applicable provisions of such title V operating permits regulations shall include, but are not limited to, those provisions addressing operating permit applications, operating permit application shield, operating permit duration, operating permit shield, operating permit issuance, operating permit revision and reopening, public participation, State review, and review by the Administrator.

(2) For NO_X Budget sources required to have a non-title V permit, the NO_X Budget portion of the non-title V permit shall be administered in accordance with the permitting authority's regulations promulgated to administer non-title V permits, except as provided otherwise by this subpart or subpart I of this part. The applicable provisions of such non-title V permits regulations may include, but are not limited to, provisions addressing permit applications, permit application shield, permit duration, permit shield, permit issuance, permit revision and reopening, public participation, State review, and review by the Administrator.

(b) Each NO_X Budget permit (including a draft or proposed NO_X Budget permit, if applicable) shall contain all applicable NO_X Budget Trading Program requirements and shall be a complete and segregable portion of the permit under paragraph (a) of this section.

§ 96.21 Submission of NO_X Budget permit applications.

(a) *Duty to apply*. The NO_X authorized account representative of any NO_X Budget source required to have a federally enforceable permit shall submit to the permitting authority a complete NO_X Budget permit application under § 96.22 by the applicable deadline in paragraph (b) of this section.

(b)(1) For NO_X Budget sources required to have a title V operating permit:

(i) For any source, with one or more NO_X Budget units under § 96.4 that commence operation before January 1, 2000, the NO_X authorized account representative shall submit a complete NO_X Budget permit application under § 96.22 covering such NO_X Budget units to the permitting authority at least 18 months (or such lesser time provided under the permitting authority's title V operating permits regulations for final action on a permit application) before May 1, 2003.

(ii) For any source, with any NO_X Budget unit under § 96.4 that commences operation on or after January 1, 2000, the NO_X authorized account representative shall submit a complete NO_X Budget permit application under § 96.22 covering such NO_X Budget unit to the permitting authority at least 18 months (or such lesser time provided under the permitting authority's title V operating permits regulations for final action on a permit application) before the later of May 1, 2003 or the date on which the NO_X Budget unit commences operation.

(2) For NO_X Budget sources required to have a non-title V permit:

(i) For any source, with one or more NO_X Budget units under § 96.4 that commence operation before January 1, 2000, the NO_X authorized account representative shall submit a complete NO_X Budget permit application under § 96.22 covering such NO_X Budget units to the permitting authority at least 18 months (or such lesser time provided under the permitting authority's non-title V permits regulations for final action on a permit application) before May 1, 2003.

(ii) For any source, with any NO_X Budget unit under § 96.4 that commences operation on or after January 1, 2000, the NO_X authorized account representative shall submit a complete NO_X Budget permit application under § 96.22 covering such NO_X Budget unit to the permitting authority at least 18 months (or such lesser time provided under the permitting authority's non-title V permits regulations for final action on a permit application) before the later of May 1, 2003 or the date on which the NO_X Budget unit commences operation.

(c) *Duty to reapply*. (1) For a NO_X Budget source required to have a title V operating permit, the NO_X authorized account representative shall submit a complete NO_X Budget permit application under § 96.22 for the NO_X Budget source covering the NO_X Budget units at the source in accordance with the permitting authority's title V operating permits regulations addressing operating permit renewal.

(2) For a NO_X Budget source required to have a non-title V permit, the NO_X authorized account representative shall submit a complete NO_X Budget permit application under § 96.22 for the NO_X Budget source covering the NO_X Budget units at the source in accordance with the permitting authority's non-title V permits regulations addressing permit renewal.

§ 96.22 Information requirements for NO_X Budget permit applications.

A complete NO_X Budget permit application shall include the following elements concerning the NO_X Budget source for which the application is submitted, in a format prescribed by the permitting authority:

(a) Identification of the NO_X Budget source, including plant name and the ORIS (Office of Regulatory Information Systems) or facility code assigned to the source by the Energy Information Administration, if applicable;

(b) Identification of each NO_X Budget unit at the NO_X Budget source and

whether it is a NO_X Budget unit under § 96.4 or under subpart I of this part;

(c) The standard requirements under § 96.6; and

(d) For each NO_X Budget opt-in unit at the NO_X Budget source, the following certification statements by the NO_X authorized account representative:

(1) ''I certify that each unit for which this permit application is submitted under subpart I of this part is not a NO_X Budget unit under 40 CFR 96.4 and is not covered by a retired unit exemption under 40 CFR 96.5 that is in effect.''

(2) If the application is for an initial NO_X Budget opt-in permit, ''I certify that each unit for which this permit application is submitted under subpart I is currently operating, as that term is defined under 40 CFR 96.2.''

§ 96.23 NO_X Budget permit contents.

(a) Each NO_X Budget permit (including any draft or proposed NO_X Budget permit, if applicable) will contain, in a format prescribed by the permitting authority, all elements required for a complete NO_X Budget permit application under § 96.22 as approved or adjusted by the permitting authority.

(b) Each NO_X Budget permit is deemed to incorporate automatically the definitions of terms under § 96.2 and, upon recordation by the Administrator under subparts F, G, or I of this part, every allocation, transfer, or deduction of a NO_X allowance to or from the compliance accounts of the NO_X Budget units covered by the permit or the overdraft account of the NO_X Budget source covered by the permit.

§ 96.24 Effective date of initial NO_X Budget permit.

The initial NO_X Budget permit covering a NO_X Budget unit for which a complete NO_X Budget permit application is timely submitted under § 96.21(b) shall become effective by the later of:

(a) May 1, 2003;

(b) May 1 of the year in which the NO_X Budget unit commences operation, if the unit commences operation on or before May 1 of that year;

(c) The date on which the NO_X Budget unit commences operation, if the unit commences operation during a control period; or

(d) May 1 of the year following the year in which the NO_X Budget unit commences operation, if the unit commences operation on or after October 1 of the year.

§ 96.25 NO_X Budget permit revisions.

(a) For a NO_X Budget source with a title V operating permit, except as provided in § 96.23(b), the permitting authority will revise the NO_X Budget permit, as necessary, in accordance with the permitting authority's title V operating permits regulations addressing permit revisions.

(b) For a NO_X Budget source with a non-title V permit, except as provided in § 96.23(b), the permitting authority will revise the NO_X Budget permit, as necessary, in accordance with the permitting authority's non-title V permits regulations addressing permit revisions.

Subpart D—Compliance Certification

§ 96.30 Compliance certification report.

(a) *Applicability and deadline.* For each control period in which one or more NO_X Budget units at a source are subject to the NO_X Budget emissions limitation, the NO_X authorized account representative of the source shall submit to the permitting authority and the Administrator by November 30 of that year, a compliance certification report for each source covering all such units.

(b) *Contents of report.* The NO_X authorized account representative shall include in the compliance certification report under paragraph (a) of this section the following elements, in a format prescribed by the Administrator, concerning each unit at the source and subject to the NO_X Budget emissions limitation for the control period covered by the report:

(1) Identification of each NO_X Budget unit;

(2) At the NO_X authorized account representative's option, the serial numbers of the NO_X allowances that are to be deducted from each unit's compliance account under § 96.54 for the control period;

(3) At the NO_X authorized account representative's option, for units sharing a common stack and having NO_X emissions that are not monitored separately or apportioned in accordance with subpart H of this part, the percentage of allowances that is to be deducted from each unit's compliance account under §96.54(e); and

(4) The compliance certification under paragraph (c) of this section.

(c) *Compliance certification*. In the compliance certification report under paragraph (a) of this section, the NO_X authorized account representative shall certify, based on reasonable inquiry of those persons with primary responsibility for operating the source and the NO_X Budget units at the source in compliance with the NO_X Budget Trading Program, whether each NO_X Budget unit for which the compliance certification is submitted was operated during the calendar year covered by the report in compliance with the requirements of the NO_X Budget Trading Program applicable to the unit, including:

(1) Whether the unit was operated in compliance with the NO_X Budget emissions limitation;

(2) Whether the monitoring plan that governs the unit has been maintained to reflect the actual operation and monitoring of the unit, and contains all information necessary to attribute NO_X emissions to the unit, in accordance with subpart H of this part;

(3) Whether all the NO_X emissions from the unit, or a group of units (including the unit) using a common stack, were monitored or accounted for through the missing data procedures and reported in the quarterly monitoring reports, including whether conditional data were reported in the quarterly reports in accordance with subpart H of this part. If conditional data were reported, the owner or operator shall indicate whether the status of all conditional data has been resolved and all necessary quarterly report resubmissions has been made;

(4) Whether the facts that form the basis for certification under subpart H of this part of each monitor at the unit or a group of units (including the unit) using a common stack, or for using an excepted monitoring method or alternative monitoring method approved under subpart H of this part, if any, has changed; and

(5) If a change is required to be reported under paragraph (c)(4) of this section, specify the nature of the change, the reason for the change, when the change occurred, and how the unit's compliance status was determined subsequent to the change, including what method was used to determine emissions when a change mandated the need for monitor recertification.

§96.31 Permitting authority's and Administrator's action on compliance certifications.

(a) The permitting authority or the Administrator may review and conduct independent audits concerning any compliance certification or any other submission under the NO_X Budget Trading Program and make appropriate adjustments of the information in the compliance certifications or other submissions.

(b) The Administrator may deduct NO_X allowances from or transfer NO_X allowances to a unit's compliance account or a source's overdraft account based on the information in the compliance certifications or other submissions, as adjusted under paragraph (a) of this section.

Subpart E—NO_X Allowance Allocations

§96.40 State trading program budget.

The State trading program budget allocated by the permitting authority under §96.42 for a control period will equal the total number of tons of NO_X emissions apportioned to the NO_X Budget units under §96.4 in the State for the control period, as determined by the applicable, approved State implementation plan.

§96.41 Timing requirements for NO_X allowance allocations.

(a) By September 30, 1999, the permitting authority will submit to the Administrator the NO_X allowance allocations, in accordance with §96.42, for the control periods in 2003, 2004, and 2005.

(b) By April 1, 2003 and April 1 of each year thereafter, the permitting authority will submit to the Administrator the NO_X allowance allocations, in accordance with § 96.42, for the control period in the year that is three years after the year of the applicable deadline for submission under this paragraph (b). If the permitting authority fails to submit to the Administrator the NO_X allowance allocations in accordance with this paragraph (b), the Administrator will allocate, for the applicable control period, the same number of NO_X allowances as were allocated for the preceding control period.

(c) By April 1, 2004 and April 1 of each year thereafter, the permitting authority will submit to the Administrator the NO_X allowance allocations, in accordance with § 96.42, for any NO_X allowances remaining in the allocation set-aside for the prior control period.

§ 96.42 NO_X allowance allocations.

(a)(1) The heat input (in mmBtu) used for calculating NO_X allowance allocations for each NO_X Budget unit under § 96.4 will be:

(i) For a NO_X allowance allocation under § 96.41(a), the average of the two highest amounts of the unit's heat input for the control periods in 1995, 1996, and 1997 if the unit is under § 96.4(a)(1) or the control period in 1995 if the unit is under § 96.4(a)(2); and

(ii) For a NO_X allowance allocation under § 96.41(b), the unit's heat input for the control period in the year that is four years before the year for which the NO_X allocation is being calculated.

(2) The unit's total heat input for the control period in each year specified under paragraph (a)(1) of this section will be determined in accordance with part 75 of this chapter if the NO_X Budget unit was otherwise subject to the requirements of part 75 of this chapter for the year, or will be based on the best available data reported to the permitting authority for the unit if the unit was not otherwise subject to the requirements of part 75 of this chapter for the year.

(b) For each control period under § 96.41, the permitting authority will allocate to all NO_X Budget units under § 96.4(a)(1) in the State that commenced operation before May 1 of the period used to calculate heat input under paragraph (a)(1) of this section, a total number of NO_X allowances equal to 95 percent in 2003, 2004, and 2005, or 98 percent thereafter, of the tons of NO_X emissions in the State trading program budget apportioned to electric generating units under § 96.40 in accordance with the following procedures:

(1) The permitting authority will allocate NO_X allowances to each NO_X Budget unit under § 96.4(a)(1) in an amount equaling 0.15 lb/mmBtu multiplied by the heat input determined under paragraph (a) of this section, rounded to the nearest whole NO_X allowance as appropriate.

(2) If the initial total number of NO_X allowances allocated to all NO_X Budget units under § 96.4(a)(1) in the State for a control period under paragraph (b)(1) of this section does not equal 95 percent in 2003, 2004, and 2005, or 98 percent thereafter, of the number of tons of NO_X emissions in the State trading program budget apportioned to electric generating units, the permitting authority will adjust the total number of NO_X allowances allocated to all such NO_X Budget units for the control period under paragraph (b)(1) of this section so that the total number of NO_X allowances allocated equals 95 percent in 2003, 2004, and 2005, or 98 percent thereafter, of the number of tons of NO_X emissions in the State trading program budget apportioned to electric generating units. This adjustment will be made by: multiplying each unit's allocation by 95 percent in 2003, 2004, and 2005, or 98 percent thereafter, of the number of tons of NO_X emissions in the State trading program budget apportioned to electric generating units divided by the total number of NO_X allowances allocated under paragraph (b)(1) of this section, and rounding to the nearest whole NO_X allowance as appropriate.

(c) For each control period under § 96.41, the permitting authority will allocate to all NO_X Budget units under § 96.4(a)(2) in the State that commenced operation before May 1 of the period used to calculate heat input under paragraph (a)(1) of this section, a total number of NO_X allowances equal to 95 percent in 2003, 2004, and 2005, or 98 percent thereafter, of the tons of NO_X

emissions in the State trading program budget apportioned to non-electric generating units under §96.40 in accordance with the following procedures:

(1) The permitting authority will allocate NO_X allowances to each NO_X Budget unit under §96.4(a)(2) in an amount equaling 0.17 lb/mmBtu multiplied by the heat input determined under paragraph (a) of this section, rounded to the nearest whole NO_X allowance as appropriate.

(2) If the initial total number of NO_X allowances allocated to all NO_X Budget units under §96.4(a)(2) in the State for a control period under paragraph (c)(1) of this section does not equal 95 percent in 2003, 2004, and 2005, or 98 percent thereafter, of the number of tons of NO_X emissions in the State trading program budget apportioned to non-electric generating units, the permitting authority will adjust the total number of NO_X allowances allocated to all such NO_X Budget units for the control period under paragraph (c)(1) of this section so that the total number of NO_X allowances allocated equals 95 percent in 2003, 2004, and 2005, or 98 percent thereafter, of the number of tons of NO_X emissions in the State trading program budget apportioned to non-electric generating units. This adjustment will be made by: multiplying each unit's allocation by 95 percent in 2003, 2004, and 2005, or 98 percent thereafter, of the number of tons of NO_X emissions in the State trading program budget apportioned to non-electric generating units divided by the total number of NO_X allowances allocated under paragraph (c)(1) of this section, and rounding to the nearest whole NO_X allowance as appropriate.

(d) For each control period under §96.41, the permitting authority will allocate NO_X allowances to NO_X Budget units under §96.4 in the State that commenced operation, or is projected to commence operation, on or after May 1 of the period used to calculate heat input under paragraph (a)(1) of this section, in accordance with the following procedures:

(1) The permitting authority will establish one allocation set-aside for each control period. Each allocation set-aside will be allocated NO_X allowances equal to 5 percent in 2003, 2004, and 2005, or 2 percent thereafter, of the tons of NO_X emissions in the State trading program budget under §96.40, rounded to the nearest whole NO_X allowance as appropriate.

(2) The NO_X authorized account representative of a NO_X Budget unit under paragraph (d) of this section may submit to the permitting authority a request, in writing or in a format specified by the permitting authority, to be allocated NO_X allowances for no more than five consecutive control periods under §96.41, starting with the control period during which the NO_X Budget unit commenced, or is projected to commence, operation and ending with the control period preceding the control period for which it will receive an allocation under paragraph (b) or (c) of this section. The NO_X allowance allocation request must be submitted prior to May 1 of the first control period for which the NO_X allowance allocation is requested and after the date on which the permitting authority issues a permit to construct the NO_X Budget unit.

(3) In a NO_X allowance allocation request under paragraph (d)(2) of this section, the NO_X authorized account representative for units under §96.4(a)(1) may request for a control period NO_X allowances in an amount that does not exceed 0.15 lb/mmBtu multiplied by the NO_X Budget unit's maximum design heat input (in mmBtu/hr) multiplied by the number of hours remaining in the control period starting with the first day in the control period on which the unit operated or is projected to operate.

(4) In a NO_X allowance allocation request under paragraph (d)(2) of this section, the NO_X authorized account representative for units under §96.4(a)(2) may request for a control period NO_X allowances in an amount that does not exceed 0.17 lb/mmBtu multiplied by the NO_X Budget unit's maximum design heat input (in mmBtu/hr) multiplied by the number of hours remaining in the control period starting with the first day in the control period on which the unit operated or is projected to operate.

(5) The permitting authority will review, and allocate NO_X allowances pursuant to, each NO_X allowance allocation request under paragraph (d)(2) of

this section in the order that the request is received by the permitting authority.

(i) Upon receipt of the NO_X allowance allocation request, the permitting authority will determine whether, and will make any necessary adjustments to the request to ensure that, for units under § 96.4(a)(1), the control period and the number of allowances specified are consistent with the requirements of paragraphs (d)(2) and (3) of this section and, for units under § 96.4(a)(2), the control period and the number of allowances specified are consistent with the requirements of paragraphs (d)(2) and (4) of this section.

(ii) If the allocation set-aside for the control period for which NO_X allowances are requested has an amount of NO_X allowances not less than the number requested (as adjusted under paragraph (d)(5)(i) of this section), the permitting authority will allocate the amount of the NO_X allowances requested (as adjusted under paragraph (d)(5)(i) of this section) to the NO_X Budget unit.

(iii) If the allocation set-aside for the control period for which NO_X allowances are requested has a smaller amount of NO_X allowances than the number requested (as adjusted under paragraph (d)(5)(i) of this section), the permitting authority will deny in part the request and allocate only the remaining number of NO_X allowances in the allocation set-aside to the NO_X Budget unit.

(iv) Once an allocation set-aside for a control period has been depleted of all NO_X allowances, the permitting authority will deny, and will not allocate any NO_X allowances pursuant to, any NO_X allowance allocation request under which NO_X allowances have not already been allocated for the control period.

(6) Within 60 days of receipt of a NO_X allowance allocation request, the permitting authority will take appropriate action under paragraph (d)(5) of this section and notify the NO_X authorized account representative that submitted the request and the Administrator of the number of NO_X allowances (if any) allocated for the control period to the NO_X Budget unit.

(e) For a NO_X Budget unit that is allocated NO_X allowances under paragraph (d) of this section for a control period, the Administrator will deduct NO_X allowances under § 96.54(b) or (e) to account for the actual utilization of the unit during the control period. The Administrator will calculate the number of NO_X allowances to be deducted to account for the unit's actual utilization using the following formulas and rounding to the nearest whole NO_X allowance as appropriate, provided that the number of NO_X allowances to be deducted shall be zero if the number calculated is less than zero:

NO_X allowances deducted for actual utilization for units under § 96.4(a)(1) = (Unit's NO_X allowances allocated for control period) − (Unit's actual control period utilization × 0.15 lb/mmBtu); and

NO_X allowances deducted for actual utilization for units under § 96.4(a)(2) = (Unit's NO_X allowances allocated for control period) − (Unit's actual control period utilization × 0.17 lb/mmBtu)

Where:

''Unit's NO_X allowances allocated for control period'' is the number of NO_X allowances allocated to the unit for the control period under paragraph (d) of this section; and

''Unit's actual control period utilization'' is the utilization (in mmBtu), as defined in § 96.2, of the unit during the control period.

(f) After making the deductions for compliance under § 96.54(b) or (e) for a control period, the Administrator will notify the permitting authority whether any NO_X allowances remain in the allocation set-aside for the control period. The permitting authority will allocate any such NO_X allowances to the NO_X Budget units in the State using the following formula and rounding to the nearest whole NO_X allowance as appropriate:

Unit's share of NO_X allowances remaining in allocation set-aside = Total NO_X allowances remaining in allocation set-aside × (Unit's NO_X allowance allocation ÷ State trading program budget excluding allocation set-aside)

Where:

''Total NO_X allowances remaining in allocation set-aside'' is the total number of NO_X allowances remaining in the allocation set-aside for the control period to which the allocation set-aside applies;

''Unit's NO_X allowance allocation'' is the number of NO_X allowances allocated under paragraph (b) or (c) of this section to the unit for the control period to which the allocation set-aside applies; and

''State trading program budget excluding allocation set-aside'' is the State trading program budget under §96.40 for the control period to which the allocation set-aside applies multiplied by 95 percent if the control period is in 2003, 2004, or 2005 or 98 percent if the control period is in any year thereafter, rounded to the nearest whole NO_X allowance as appropriate.

[63 FR 57514, Oct. 27, 1998, as amended at 63 FR 71225, Dec. 24, 1998]

Subpart F—NO_X Allowance Tracking System

§96.50 NO_X Allowance Tracking System accounts.

(a) *Nature and function of compliance accounts and overdraft accounts.* Consistent with §96.51(a), the Administrator will establish one compliance account for each NO_X Budget unit and one overdraft account for each source with one or more NO_X Budget units. Allocations of NO_X allowances pursuant to subpart E of this part or §96.88 and deductions or transfers of NO_X allowances pursuant to §96.31, §96.54, §96.56, subpart G of this part, or subpart I of this part will be recorded in the compliance accounts or overdraft accounts in accordance with this subpart.

(b) *Nature and function of general accounts.* Consistent with §96.51(b), the Administrator will establish, upon request, a general account for any person. Transfers of allowances pursuant to subpart G of this part will be recorded in the general account in accordance with this subpart.

§96.51 Establishment of accounts.

(a) *Compliance accounts and overdraft accounts.* Upon receipt of a complete account certificate of representation under §96.13, the Administrator will establish:

(1) A compliance account for each NO_X Budget unit for which the account certificate of representation was submitted; and

(2) An overdraft account for each source for which the account certificate of representation was submitted and that has two or more NO_X Budget units.

(b) *General accounts.* (1) Any person may apply to open a general account for the purpose of holding and transferring allowances. A complete application for a general account shall be submitted to the Administrator and shall include the following elements in a format prescribed by the Administrator:

(i) Name, mailing address, e-mail address (if any), telephone number, and facsimile transmission number (if any) of the NO_X authorized account representative and any alternate NO_X authorized account representative;

(ii) At the option of the NO_X authorized account representative, organization name and type of organization;

(iii) A list of all persons subject to a binding agreement for the NO_X authorized account representative or any alternate NO_X authorized account representative to represent their ownership interest with respect to the allowances held in the general account;

(iv) The following certification statement by the NO_X authorized account representative and any alternate NO_X authorized account representative: ''I certify that I was selected as the NO_X authorized account representative or the NO_X alternate authorized account representative, as applicable, by an agreement that is binding on all persons who have an ownership interest with respect to allowances held in the general account. I certify that I have all the necessary authority to carry out my duties and responsibilities under the NO_X Budget Trading Program on behalf of such persons and that each such person shall be fully bound by my representations, actions, inactions, or submissions and by any order or decision issued to me by the Administrator or a court regarding the general account.''

(v) The signature of the NO_X authorized account representative and any alternate NO_X authorized account representative and the dates signed.

(vi) Unless otherwise required by the permitting authority or the Administrator, documents of agreement referred to in the account certificate of

representation shall not be submitted to the permitting authority or the Administrator. Neither the permitting authority nor the Administrator shall be under any obligation to review or evaluate the sufficiency of such documents, if submitted.

(2) Upon receipt by the Administrator of a complete application for a general account under paragraph (b)(1) of this section:

(i) The Administrator will establish a general account for the person or persons for whom the application is submitted.

(ii) The NO_X authorized account representative and any alternate NO_X authorized account representative for the general account shall represent and, by his or her representations, actions, inactions, or submissions, legally bind each person who has an ownership interest with respect to NO_X allowances held in the general account in all matters pertaining to the NO_X Budget Trading Program, not withstanding any agreement between the NO_X authorized account representative or any alternate NO_X authorized account representative and such person. Any such person shall be bound by any order or decision issued to the NO_X authorized account representative or any alternate NO_X authorized account representative by the Administrator or a court regarding the general account.

(iii) Each submission concerning the general account shall be submitted, signed, and certified by the NO_X authorized account representative or any alternate NO_X authorized account representative for the persons having an ownership interest with respect to NO_X allowances held in the general account. Each such submission shall include the following certification statement by the NO_X authorized account representative or any alternate NO_X authorized account representative any: ''I am authorized to make this submission on behalf of the persons having an ownership interest with respect to the NO_X allowances held in the general account. I certify under penalty of law that I have personally examined, and am familiar with, the statements and information submitted in this document and all its attachments. Based on my inquiry of those individuals with primary responsibility for obtaining the information, I certify that the statements and information are to the best of my knowledge and belief true, accurate, and complete. I am aware that there are significant penalties for submitting false statements and information or omitting required statements and information, including the possibility of fine or imprisonment.''

(iv) The Administrator will accept or act on a submission concerning the general account only if the submission has been made, signed, and certified in accordance with paragraph (b)(2)(iii) of this section.

(3)(i) An application for a general account may designate one and only one NO_X authorized account representative and one and only one alternate NO_X authorized account representative who may act on behalf of the NO_X authorized account representative. The agreement by which the alternate NO_X authorized account representative is selected shall include a procedure for authorizing the alternate NO_X authorized account representative to act in lieu of the NO_X authorized account representative.

(ii) Upon receipt by the Administrator of a complete application for a general account under paragraph (b)(1) of this section, any representation, action, inaction, or submission by any alternate NO_X authorized account representative shall be deemed to be a representation, action, inaction, or submission by the NO_X authorized account representative.

(4)(i) The NO_X authorized account representative for a general account may be changed at any time upon receipt by the Administrator of a superseding complete application for a general account under paragraph (b)(1) of this section. Notwithstanding any such change, all representations, actions, inactions, and submissions by the previous NO_X authorized account representative prior to the time and date when the Administrator receives the superseding application for a general account shall be binding on the new NO_X authorized account representative and the persons with an ownership interest with respect to the allowances in the general account.

(ii) The alternate NO_X authorized account representative for a general account may be changed at any time upon receipt by the Administrator of a superseding complete application for a general account under paragraph (b)(1) of this section. Notwithstanding any such change, all representations, actions, inactions, and submissions by the previous alternate NO_X authorized account representative prior to the time and date when the Administrator receives the superseding application for a general account shall be binding on the new alternate NO_X authorized account representative and the persons with an ownership interest with respect to the allowances in the general account.

(iii)(A) In the event a new person having an ownership interest with respect to NO_X allowances in the general account is not included in the list of such persons in the account certificate of representation, such new person shall be deemed to be subject to and bound by the account certificate of representation, the representation, actions, inactions, and submissions of the NO_X authorized account representative and any alternate NO_X authorized account representative of the source or unit, and the decisions, orders, actions, and inactions of the Administrator, as if the new person were included in such list.

(B) Within 30 days following any change in the persons having an ownership interest with respect to NO_X allowances in the general account, including the addition of persons, the NO_X authorized account representative or any alternate NO_X authorized account representative shall submit a revision to the application for a general account amending the list of persons having an ownership interest with respect to the NO_X allowances in the general account to include the change.

(5)(i) Once a complete application for a general account under paragraph (b)(1) of this section has been submitted and received, the Administrator will rely on the application unless and until a superseding complete application for a general account under paragraph (b)(1) of this section is received by the Administrator.

(ii) Except as provided in paragraph (b)(4) of this section, no objection or other communication submitted to the Administrator concerning the authorization, or any representation, action, inaction, or submission of the NO_X authorized account representative or any alternate NO_X authorized account representative for a general account shall affect any representation, action, inaction, or submission of the NO_X authorized account representative or any alternate NO_X authorized account representative or the finality of any decision or order by the Administrator under the NO_X Budget Trading Program.

(iii) The Administrator will not adjudicate any private legal dispute concerning the authorization or any representation, action, inaction, or submission of the NO_X authorized account representative or any alternate NO_X authorized account representative for a general account, including private legal disputes concerning the proceeds of NO_X allowance transfers.

(c) *Account identification.* The Administrator will assign a unique identifying number to each account established under paragraph (a) or (b) of this section.

§ 96.52 NO_X Allowance Tracking System responsibilities of NO_X authorized account representative.

(a) Following the establishment of a NO_X Allowance Tracking System account, all submissions to the Administrator pertaining to the account, including, but not limited to, submissions concerning the deduction or transfer of NO_X allowances in the account, shall be made only by the NO_X authorized account representative for the account.

(b) *Authorized account representative identification.* The Administrator will assign a unique identifying number to each NO_X authorized account representative.

§ 96.53 Recordation of NO_X allowance allocations.

(a) The Administrator will record the NO_X allowances for 2003 in the NO_X Budget units' compliance accounts and the allocation set-asides, as allocated

under subpart E of this part. The Administrator will also record the NO_X allowances allocated under § 96.88(a)(1) for each NO_X Budget opt-in source in its compliance account.

(b) Each year, after the Administrator has made all deductions from a NO_X Budget unit's compliance account and the overdraft account pursuant to § 96.54, the Administrator will record NO_X allowances, as allocated to the unit under subpart E of this part or under § 96.88(a)(2), in the compliance account for the year after the last year for which allowances were previously allocated to the compliance account. Each year, the Administrator will also record NO_X allowances, as allocated under subpart E of this part, in the allocation set-aside for the year after the last year for which allowances were previously allocated to an allocation set-aside.

(c) *Serial numbers for allocated NO_X allowances.* When allocating NO_X allowances to and recording them in an account, the Administrator will assign each NO_X allowance a unique identification number that will include digits identifying the year for which the NO_X allowance is allocated.

§ 96.54 Compliance.

(a) *NO_X allowance transfer deadline.* The NO_X allowances are available to be deducted for compliance with a unit's NO_X Budget emissions limitation for a control period in a given year only if the NO_X allowances:

(1) Were allocated for a control period in a prior year or the same year; and

(2) Are held in the unit's compliance account, or the overdraft account of the source where the unit is located, as of the NO_X allowance transfer deadline for that control period or are transferred into the compliance account or overdraft account by a NO_X allowance transfer correctly submitted for recordation under § 96.60 by the NO_X allowance transfer deadline for that control period.

(b) *Deductions for compliance.* (1) Following the recordation, in accordance with § 96.61, of NO_X allowance transfers submitted for recordation in the unit's compliance account or the overdraft account of the source where the unit is located by the NO_X allowance transfer deadline for a control period, the Administrator will deduct NO_X allowances available under paragraph (a) of this section to cover the unit's NO_X emissions (as determined in accordance with subpart H of this part), or to account for actual utilization under § 96.42(e), for the control period:

(i) From the compliance account; and

(ii) Only if no more NO_X allowances available under paragraph (a) of this section remain in the compliance account, from the overdraft account. In deducting allowances for units at the source from the overdraft account, the Administrator will begin with the unit having the compliance account with the lowest NO_X Allowance Tracking System account number and end with the unit having the compliance account with the highest NO_X Allowance Tracking System account number (with account numbers sorted beginning with the left-most character and ending with the right-most character and the letter characters assigned values in alphabetical order and less than all numeric characters).

(2) The Administrator will deduct NO_X allowances first under paragraph (b)(1)(i) of this section and then under paragraph (b)(1)(ii) of this section:

(i) Until the number of NO_X allowances deducted for the control period equals the number of tons of NO_X emissions, determined in accordance with subpart H of this part, from the unit for the control period for which compliance is being determined, plus the number of NO_X allowances required for deduction to account for actual utilization under § 96.42(e) for the control period; or

(ii) Until no more NO_X allowances available under paragraph (a) of this section remain in the respective account.

(c)(1) *Identification of NO_X allowances by serial number.* The NO_X authorized account representative for each compliance account may identify by serial number the NO_X allowances to be deducted from the unit's compliance account under paragraph (b), (d), or (e) of this section. Such identification shall be made in the compliance certification report submitted in accordance with § 96.30.

(2) *First-in, first-out.* The Administrator will deduct NO_X allowances for a control period from the compliance account, in the absence of an identification or in the case of a partial identification of NO_X allowances by serial number under paragraph (c)(1) of this section, or the overdraft account on a first-in, first-out (FIFO) accounting basis in the following order:

(i) Those NO_X allowances that were allocated for the control period to the unit under subpart E or I of this part;

(ii) Those NO_X allowances that were allocated for the control period to any unit and transferred and recorded in the account pursuant to subpart G of this part, in order of their date of recordation;

(iii) Those NO_X allowances that were allocated for a prior control period to the unit under subpart E or I of this part; and

(iv) Those NO_X allowances that were allocated for a prior control period to any unit and transferred and recorded in the account pursuant to subpart G of this part, in order of their date of recordation.

(d) *Deductions for excess emissions.* (1) After making the deductions for compliance under paragraph (b) of this section, the Administrator will deduct from the unit's compliance account or the overdraft account of the source where the unit is located a number of NO_X allowances, allocated for a control period after the control period in which the unit has excess emissions, equal to three times the number of the unit's excess emissions.

(2) If the compliance account or overdraft account does not contain sufficient NO_X allowances, the Administrator will deduct the required number of NO_X allowances, regardless of the control period for which they were allocated, whenever NO_X allowances are recorded in either account.

(3) Any allowance deduction required under paragraph (d) of this section shall not affect the liability of the owners and operators of the NO_X Budget unit for any fine, penalty, or assessment, or their obligation to comply with any other remedy, for the same violation, as ordered under the CAA or applicable State law. The following guidelines will be followed in assessing fines, penalties or other obligations:

(i) For purposes of determining the number of days of violation, if a NO_X Budget unit has excess emissions for a control period, each day in the control period (153 days) constitutes a day in violation unless the owners and operators of the unit demonstrate that a lesser number of days should be considered.

(ii) Each ton of excess emissions is a separate violation.

(e) *Deductions for units sharing a common stack.* In the case of units sharing a common stack and having emissions that are not separately monitored or apportioned in accordance with subpart H of this part:

(1) The NO_X authorized account representative of the units may identify the percentage of NO_X allowances to be deducted from each such unit's compliance account to cover the unit's share of NO_X emissions from the common stack for a control period. Such identification shall be made in the compliance certification report submitted in accordance with §96.30.

(2) Notwithstanding paragraph (b)(2)(i) of this section, the Administrator will deduct NO_X allowances for each such unit until the number of NO_X allowances deducted equals the unit's identified percentage (under paragraph (e)(1) of this section) of the number of tons of NO_X emissions, as determined in accordance with subpart H of this part, from the common stack for the control period for which compliance is being determined or, if no percentage is identified, an equal percentage for each such unit, plus the number of allowances required for deduction to account for actual utilization under §96.42(e) for the control period.

(f) The Administrator will record in the appropriate compliance account or overdraft account all deductions from such an account pursuant to paragraphs (b), (d), or (e) of this section.

§96.55 Banking.

(a) NO_X allowances may be banked for future use or transfer in a compliance account, an overdraft account, or a general account, as follows:

(1) Any NO_X allowance that is held in a compliance account, an overdraft account, or a general account will remain in such account unless and until the NO_X allowance is deducted or transferred under § 96.31, § 96.54, § 96.56, subpart G of this part, or subpart I of this part.

(2) The Administrator will designate, as a ''banked'' NO_X allowance, any NO_X allowance that remains in a compliance account, an overdraft account, or a general account after the Administrator has made all deductions for a given control period from the compliance account or overdraft account pursuant to § 96.54.

(b) Each year starting in 2004, after the Administrator has completed the designation of banked NO_X allowances under paragraph (a)(2) of this section and before May 1 of the year, the Administrator will determine the extent to which banked NO_X allowances may be used for compliance in the control period for the current year, as follows:

(1) The Administrator will determine the total number of banked NO_X allowances held in compliance accounts, overdraft accounts, or general accounts.

(2) If the total number of banked NO_X allowances determined, under paragraph (b)(1) of this section, to be held in compliance accounts, overdraft accounts, or general accounts is less than or equal to 10% of the sum of the State trading program budgets for the control period for the States in which NO_X Budget units are located, any banked NO_X allowance may be deducted for compliance in accordance with § 96.54.

(3) If the total number of banked NO_X allowances determined, under paragraph (b)(1) of this section, to be held in compliance accounts, overdraft accounts, or general accounts exceeds 10% of the sum of the State trading program budgets for the control period for the States in which NO_X Budget units are located, any banked allowance may be deducted for compliance in accordance with § 96.54, except as follows:

(i) The Administrator will determine the following ratio: 0.10 multiplied by the sum of the State trading program budgets for the control period for the States in which NO_X Budget units are located and divided by the total number of banked NO_X allowances determined, under paragraph (b)(1) of this section, to be held in compliance accounts, overdraft accounts, or general accounts.

(ii) The Administrator will multiply the number of banked NO_X allowances in each compliance account or overdraft account. The resulting product is the number of banked NO_X allowances in the account that may be deducted for compliance in accordance with § 96.54. Any banked NO_X allowances in excess of the resulting product may be deducted for compliance in accordance with § 96.54, except that, if such NO_X allowances are used to make a deduction, two such NO_X allowances must be deducted for each deduction of one NO_X allowance required under § 96.54.

(c) Any NO_X Budget unit may reduce its NO_X emission rate in the 2001 or 2002 control period, the owner or operator of the unit may request early reduction credits, and the permitting authority may allocate NO_X allowances in 2003 to the unit in accordance with the following requirements.

(1) Each NO_X Budget unit for which the owner or operator requests any early reduction credits under paragraph (c)(4) of this section shall monitor NO_X emissions in accordance with subpart H of this part starting in the 2000 control period and for each control period for which such early reduction credits are requested. The unit's monitoring system availability shall be not less than 90 percent during the 2000 control period, and the unit must be in compliance with any applicable State or Federal emissions or emissions-related requirements.

(2) NO_X emission rate and heat input under paragraphs (c)(3) through (5) of this section shall be determined in accordance with subpart H of this part.

(3) Each NO_X Budget unit for which the owner or operator requests any early reduction credits under paragraph (c)(4) of this section shall reduce its NO_X emission rate, for each control period for which early reduction credits are requested, to less than both 0.25 lb/mmBtu and 80 percent of the unit's NO_X emission rate in the 2000 control period.

(4) The NO_X authorized account representative of a NO_X Budget unit that meets the requirements of paragraphs (c)(1)and (3) of this section may submit to the permitting authority a request for early reduction credits for the unit based on NO_X emission rate reductions made by the unit in the control period for 2001 or 2002 in accordance with paragraph (c)(3) of this section.

(i) In the early reduction credit request, the NO_X authorized account may request early reduction credits for such control period in an amount equal to the unit's heat input for such control period multiplied by the difference between 0.25 lb/mmBtu and the unit's NO_X emission rate for such control period, divided by 2000 lb/ton, and rounded to the nearest ton.

(ii) The early reduction credit request must be submitted, in a format specified by the permitting authority, by October 31 of the year in which the NO_X emission rate reductions on which the request is based are made or such later date approved by the permitting authority.

(5) The permitting authority will allocate NO_X allowances, to NO_X Budget units meeting the requirements of paragraphs (c)(1) and (3) of this section and covered by early reduction requests meeting the requirements of paragraph (c)(4)(ii) of this section, in accordance with the following procedures:

(i) Upon receipt of each early reduction credit request, the permitting authority will accept the request only if the requirements of paragraphs (c)(1), (c)(3), and (c)(4)(ii) of this section are met and, if the request is accepted, will make any necessary adjustments to the request to ensure that the amount of the early reduction credits requested meets the requirement of paragraphs (c)(2) and (4) of this section.

(ii) If the State's compliance supplement pool has an amount of NO_X allowances not less than the number of early reduction credits in all accepted early reduction credit requests for 2001 and 2002 (as adjusted under paragraph (c)(5)(i) of this section), the permitting authority will allocate to each NO_X Budget unit covered by such accepted requests one allowance for each early reduction credit requested (as adjusted under paragraph (c)(5)(i) of this section).

(iii) If the State's compliance supplement pool has a smaller amount of NO_X allowances than the number of early reduction credits in all accepted early reduction credit requests for 2001 and 2002 (as adjusted under paragraph (c)(5)(i) of this section), the permitting authority will allocate NO_X allowances to each NO_X Budget unit covered by such accepted requests according to the following formula:

Unit's allocated early reduction credits = [(Unit's adjusted early reduction credits) / (Total adjusted early reduction credits requested by all units)] x (Available NO_X allowances from the State's compliance supplement pool)

where:

''Unit's adjusted early reduction credits'' is the number of early reduction credits for the unit for 2001 and 2002 in accepted early reduction credit requests, as adjusted under paragraph (c)(5)(i) of this section.

''Total adjusted early reduction credits requested by all units'' is the number of early reduction credits for all units for 2001 and 2002 in accepted early reduction credit requests, as adjusted under paragraph (c)(5)(i) of this section.

''Available NO_X allowances from the State's compliance supplement pool'' is the number of NO_X allowances in the State's compliance supplement pool and available for early reduction credits for 2001 and 2002.

(6) By May 1, 2003, the permitting authority will submit to the Administrator the allocations of NO_X allowances determined under paragraph (c)(5) of this section. The Administrator will record such allocations to the extent that they are consistent with the requirements of paragraphs (c)(1) through (5) of this section.

(7) NO_X allowances recorded under paragraph (c)(6) of this section may be deducted for compliance under §96.54 for the control periods in 2003 or 2004. Notwithstanding paragraph (a) of this section, the Administrator will deduct as retired any NO_X allowance that is recorded under paragraph (c)(6) of this section and is not deducted for compliance in accordance with §96.54 for the control period in 2003 or 2004.

(8) NO_X allowances recorded under paragraph (c)(6) of this section are treated as banked allowances in 2004

for the purposes of paragraphs (a) and (b) of this section.

§ 96.56 Account error.

The Administrator may, at his or her sole discretion and on his or her own motion, correct any error in any NO_X Allowance Tracking System account. Within 10 business days of making such correction, the Administrator will notify the NO_X authorized account representative for the account.

§ 96.57 Closing of general accounts.

(a) The NO_X authorized account representative of a general account may instruct the Administrator to close the account by submitting a statement requesting deletion of the account from the NO_X Allowance Tracking System and by correctly submitting for recordation under § 96.60 an allowance transfer of all NO_X allowances in the account to one or more other NO_X Allowance Tracking System accounts.

(b) If a general account shows no activity for a period of a year or more and does not contain any NO_X allowances, the Administrator may notify the NO_X authorized account representative for the account that the account will be closed and deleted from the NO_X Allowance Tracking System following 20 business days after the notice is sent. The account will be closed after the 20-day period unless before the end of the 20-day period the Administrator receives a correctly submitted transfer of NO_X allowances into the account under § 96.60 or a statement submitted by the NO_X authorized account representative demonstrating to the satisfaction of the Administrator good cause as to why the account should not be closed.

Subpart G—NO_X Allowance Transfers

§ 96.60 Submission of NO_X allowance transfers.

The NO_X authorized account representatives seeking recordation of a NO_X allowance transfer shall submit the transfer to the Administrator. To be considered correctly submitted, the NO_X allowance transfer shall include the following elements in a format specified by the Administrator:

(a) The numbers identifying both the transferor and transferee accounts;

(b) A specification by serial number of each NO_X allowance to be transferred; and

(c) The printed name and signature of the NO_X authorized account representative of the transferor account and the date signed.

§ 96.61 EPA recordation.

(a) Within 5 business days of receiving a NO_X allowance transfer, except as provided in paragraph (b) of this section, the Administrator will record a NO_X allowance transfer by moving each NO_X allowance from the transferor account to the transferee account as specified by the request, provided that:

(1) The transfer is correctly submitted under § 96.60;

(2) The transferor account includes each NO_X allowance identified by serial number in the transfer; and

(3) The transfer meets all other requirements of this part.

(b) A NO_X allowance transfer that is submitted for recordation following the NO_X allowance transfer deadline and that includes any NO_X allowances allocated for a control period prior to or the same as the control period to which the NO_X allowance transfer deadline applies will not be recorded until after completion of the process of recordation of NO_X allowance allocations in § 96.53(b).

(c) Where a NO_X allowance transfer submitted for recordation fails to meet the requirements of paragraph (a) of this section, the Administrator will not record such transfer.

§ 96.62 Notification.

(a) *Notification of recordation.* Within 5 business days of recordation of a NO_X allowance transfer under § 96.61, the Administrator will notify each party to the transfer. Notice will be given to the NO_X authorized account representatives of both the transferror and transferee accounts.

(b) *Notification of non-recordation.* Within 10 business days of receipt of a NO_X allowance transfer that fails to meet the requirements of § 96.61(a), the Administrator will notify the NO_X authorized account representatives of

both accounts subject to the transfer of:

(1) A decision not to record the transfer, and (2) The reasons for such non-recordation.

(c) Nothing in this section shall preclude the submission of a NO_X allowance transfer for recordation following notification of non-recordation.

Subpart H—Monitoring and Reporting

§96.70 General requirements.

The owners and operators, and to the extent applicable, the NO_X authorized account representative of a NO_X Budget unit, shall comply with the monitoring and reporting requirements as provided in this subpart and in subpart H of part 75 of this chapter. For purposes of complying with such requirements, the definitions in §96.2 and in §72.2 of this chapter shall apply, and the terms ''affected unit,'' ''designated representative,'' and ''continuous emission monitoring system'' (or ''CEMS'') in part 75 of this chapter shall be replaced by the terms ''NO_X Budget unit,'' ''NO_X authorized account representative,'' and ''continuous emission monitoring system'' (or ''CEMS''), respectively, as defined in §96.2.

(a) *Requirements for installation, certification, and data accounting.* The owner or operator of each NO_X Budget unit must meet the following requirements. These provisions also apply to a unit for which an application for a NO_X Budget opt-in permit is submitted and not denied or withdrawn, as provided in subpart I of this part:

(1) Install all monitoring systems required under this subpart for monitoring NO_X mass. This includes all systems required to monitor NO_X emission rate, NO_X concentration, heat input, and flow, in accordance with §§75.72 and 75.76.

(2) Install all monitoring systems for monitoring heat input, if required under §96.76 for developing NO_X allowance allocations.

(3) Successfully complete all certification tests required under §96.71 and meet all other provisions of this subpart and part 75 of this chapter applicable to the monitoring systems under paragraphs (a)(1) and (2) of this section.

(4) Record, and report data from the monitoring systems under paragraphs (a)(1) and (2) of this section.

(b) *Compliance dates.* The owner or operator must meet the requirements of paragraphs (a)(1) through (a)(3) of this section on or before the following dates and must record and report data on and after the following dates:

(1) NO_X Budget units for which the owner or operator intends to apply for early reduction credits under §96.55(d) must comply with the requirements of this subpart by May 1, 2000.

(2) Except for NO_X Budget units under paragraph (b)(1) of this section, NO_X Budget units under §96.4 that commence operation before January 1, 2002, must comply with the requirements of this subpart by May 1, 2002.

(3) NO_X Budget units under §96.4 that commence operation on or after January 1, 2002 and that report on an annual basis under §96.74(d) must comply with the requirements of this subpart by the later of the following dates:

(i) May 1, 2002; or

(ii) The earlier of:

(A) 180 days after the date on which the unit commences operation or, (B) For units under §96.4(a)(1), 90 days after the date on which the unit commences commercial operation.

(4) NO_X Budget units under §96.4 that commence operation on or after January 1, 2002 and that report on a control season basis under §96.74(d) must comply with the requirements of this subpart by the later of the following dates:

(i) The earlier of:

(A) 180 days after the date on which the unit commences operation or,

(B) For units under §96.4(a)(1), 90 days after the date on which the unit commences commercial operation.

(ii) However, if the applicable deadline under paragraph (b)(4)(i) section does not occur during a control period, May 1; immediately following the date determined in accordance with paragraph (b)(4)(i) of this section.

(5) For a NO_X Budget unit with a new stack or flue for which construction is completed after the applicable deadline under paragraph (b)(1), (b)(2) or (b)(3) of this section or subpart I of this part:

(i) 90 days after the date on which emissions first exit to the atmosphere through the new stack or flue;

(ii) However, if the unit reports on a control season basis under § 96.74(d) and the applicable deadline under paragraph (b)(5)(i) of this section does not occur during the control period, May 1 immediately following the applicable deadline in paragraph (b)(5)(i) of this section.

(6) For a unit for which an application for a NO_X Budget opt in permit is submitted and not denied or withdrawn, the compliance dates specified under subpart I of this part.

(c) *Reporting data prior to initial certification.* (1) The owner or operator of a NO_X Budget unit that misses the certification deadline under paragraph (b)(1) of this section is not eligible to apply for early reduction credits. The owner or operator of the unit becomes subject to the certification deadline under paragraph (b)(2) of this section.

(2) The owner or operator of a NO_X Budget under paragraphs (b)(3) or (b)(4) of this section must determine, record and report NO_X mass, heat input (if required for purposes of allocations) and any other values required to determine NO_X Mass (e.g. NO_X emission rate and heat input or NO_X concentration and stack flow) using the provisions of § 75.70(g) of this chapter, from the date and hour that the unit starts operating until all required certification tests are successfully completed.

(d) *Prohibitions.* (1) No owner or operator of a NO_X Budget unit or a non-NO_X Budget unit monitored under § 75.72(b)(2)(ii) shall use any alternative monitoring system, alternative reference method, or any other alternative for the required continuous emission monitoring system without having obtained prior written approval in accordance with § 96.75.

(2) No owner or operator of a NO_X Budget unit or a non-NO_X Budget unit monitored under § 75.72(b)(2)(ii) shall operate the unit so as to discharge, or allow to be discharged, NO_X emissions to the atmosphere without accounting for all such emissions in accordance with the applicable provisions of this subpart and part 75 of this chapter except as provided for in § 75.74 of this chapter.

(3) No owner or operator of a NO_X Budget unit or a non-NO_X Budget unit monitored under § 75.72(b)(2)(ii) shall disrupt the continuous emission monitoring system, any portion thereof, or any other approved emission monitoring method, and thereby avoid monitoring and recording NO_X mass emissions discharged into the atmosphere, except for periods of recertification or periods when calibration, quality assurance testing, or maintenance is performed in accordance with the applicable provisions of this subpart and part 75 of this chapter except as provided for in § 75.74 of this chapter.

(4) No owner or operator of a NO_X Budget unit or a non-NO_X Budget unit monitored under § 75.72(b)(2)(ii) shall retire or permanently discontinue use of the continuous emission monitoring system, any component thereof, or any other approved emission monitoring system under this subpart, except under any one of the following circumstances:

(i) During the period that the unit is covered by a retired unit exemption under § 96.5 that is in effect;

(ii) The owner or operator is monitoring emissions from the unit with another certified monitoring system approved, in accordance with the applicable provisions of this subpart and part 75 of this chapter, by the permitting authority for use at that unit that provides emission data for the same pollutant or parameter as the retired or discontinued monitoring system; or

(iii) The NO_X authorized account representative submits notification of the date of certification testing of a replacement monitoring system in accordance with § 96.71(b)(2).

§ 96.71 Initial certification and recertification procedures

(a) The owner or operator of a NO_X Budget unit that is subject to an Acid Rain emissions limitation shall comply with the initial certification and recertification procedures of part 75 of this chapter, except that:

(1) If, prior to January 1, 1998, the Administrator approved a petition under § 75.17(a) or (b) of this chapter for apportioning the NO_X emission rate measured in a common stack or a petition under § 75.66 of this chapter for an alternative to a requirement in § 75.17 of this chapter, the NO_X authorized account representative shall resubmit

the petition to the Administrator under §96.75(a) to determine if the approval applies under the NO_X Budget Trading Program.

(2) For any additional CEMS required under the common stack provisions in §75.72 of this chapter, or for any NO_X concentration CEMS used under the provisions of §75.71(a)(2) of this chapter, the owner or operator shall meet the requirements of paragraph (b) of this section.

(b) The owner or operator of a NO_X Budget unit that is not subject to an Acid Rain emissions limitation shall comply with the following initial certification and recertification procedures, except that the owner or operator of a unit that qualifies to use the low mass emissions excepted monitoring methodology under §75.19 shall also meet the requirements of paragraph (c) of this section and the owner or operator of a unit that qualifies to use an alternative monitoring system under subpart E of part 75 of this chapter shall also meet the requirements of paragraph (d) of this section. The owner or operator of a NO_X Budget unit that is subject to an Acid Rain emissions limitation, but requires additional CEMS under the common stack provisions in §75.72 of this chapter, or that uses a NO_X concentration CEMS under §75.71(a)(2) of this chapter also shall comply with the following initial certification and recertification procedures.

(1) *Requirements for initial certification.* The owner or operator shall ensure that each monitoring system required by subpart H of part 75 of this chapter (which includes the automated data acquisition and handling system) successfully completes all of the initial certification testing required under §75.20 of this chapter. The owner or operator shall ensure that all applicable certification tests are successfully completed by the deadlines specified in §96.70(b). In addition, whenever the owner or operator installs a monitoring system in order to meet the requirements of this part in a location where no such monitoring system was previously installed, initial certification according to §75.20 is required.

(2) *Requirements for recertification.* Whenever the owner or operator makes a replacement, modification, or change in a certified monitoring system that the Administrator or the permitting authority determines significantly affects the ability of the system to accurately measure or record NO_X mass emissions or heat input or to meet the requirements of §75.21 of this chapter or appendix B to part 75 of this chapter, the owner or operator shall recertify the monitoring system according to §75.20(b) of this chapter. Furthermore, whenever the owner or operator makes a replacement, modification, or change to the flue gas handling system or the unit's operation that the Administrator or the permitting authority determines to significantly change the flow or concentration profile, the owner or operator shall recertify the continuous emissions monitoring system according to §75.20(b) of this chapter. Examples of changes which require recertification include: replacement of the analyzer, change in location or orientation of the sampling probe or site, or changing of flow rate monitor polynomial coefficients.

(3) *Certification approval process for initial certifications and recertification.* (i) *Notification of certification.* The NO_X authorized account representative shall submit to the permitting authority, the appropriate EPA Regional Office and the permitting authority a written notice of the dates of certification in accordance with §96.73.

(ii) *Certification application.* The NO_X authorized account representative shall submit to the permitting authority a certification application for each monitoring system required under subpart H of part 75 of this chapter. A complete certification application shall include the information specified in subpart H of part 75 of this chapter.

(iii) Except for units using the low mass emission excepted methodology under §75.19 of this chapter, the provisional certification date for a monitor shall be determined using the procedures set forth in §75.20(a)(3) of this chapter. A provisionally certified monitor may be used under the NO_X Budget Trading Program for a period not to exceed 120 days after receipt by the permitting authority of the complete certification application for the monitoring system or component thereof

under paragraph (b)(3)(ii) of this section. Data measured and recorded by the provisionally certified monitoring system or component thereof, in accordance with the requirements of part 75 of this chapter, will be considered valid quality-assured data (retroactive to the date and time of provisional certification), provided that the permitting authority does not invalidate the provisional certification by issuing a notice of disapproval within 120 days of receipt of the complete certification application by the permitting authority.

(iv) *Certification application formal approval process.* The permitting authority will issue a written notice of approval or disapproval of the certification application to the owner or operator within 120 days of receipt of the complete certification application under paragraph (b)(3)(ii) of this section. In the event the permitting authority does not issue such a notice within such 120-day period, each monitoring system which meets the applicable performance requirements of part 75 of this chapter and is included in the certification application will be deemed certified for use under the NO_X Budget Trading Program.

(A) *Approval notice.* If the certification application is complete and shows that each monitoring system meets the applicable performance requirements of part 75 of this chapter, then the permitting authority will issue a written notice of approval of the certification application within 120 days of receipt.

(B) *Incomplete application notice.* A certification application will be considered complete when all of the applicable information required to be submitted under paragraph (b)(3)(ii) of this section has been received by the permitting authority. If the certification application is not complete, then the permitting authority will issue a written notice of incompleteness that sets a reasonable date by which the NO_X authorized account representative must submit the additional information required to complete the certification application. If the NO_X authorized account representative does not comply with the notice of incompleteness by the specified date, then the permitting authority may issue a notice of disapproval under paragraph (b)(3)(iv)(C) of this section.

(C) *Disapproval notice.* If the certification application shows that any monitoring system or component thereof does not meet the performance requirements of this part, or if the certification application is incomplete and the requirement for disapproval under paragraph (b)(3)(iv)(B) of this section has been met, the permitting authority will issue a written notice of disapproval of the certification application. Upon issuance of such notice of disapproval, the provisional certification is invalidated by the permitting authority and the data measured and recorded by each uncertified monitoring system or component thereof shall not be considered valid quality-assured data beginning with the date and hour of provisional certification. The owner or operator shall follow the procedures for loss of certification in paragraph (b)(3)(v) of this section for each monitoring system or component thereof which is disapproved for initial certification.

(D) *Audit decertification.* The permitting authority may issue a notice of disapproval of the certification status of a monitor in accordance with § 96.72(b).

(v) *Procedures for loss of certification.* If the permitting authority issues a notice of disapproval of a certification application under paragraph (b)(3)(iv)(C) of this section or a notice of disapproval of certification status under paragraph (b)(3)(iv)(D) of this section, then:

(A) The owner or operator shall substitute the following values, for each hour of unit operation during the period of invalid data beginning with the date and hour of provisional certification and continuing until the time, date, and hour specified under § 75.20(a)(5)(i) of this chapter:

(1) For units using or intending to monitor for NO_X emission rate and heat input or for units using the low mass emission excepted methodology under § 75.19 of this chapter, the maximum potential NO_X emission rate and the maximum potential hourly heat input of the unit.

(2) For units intending to monitor for NO_X mass emissions using a NO_X pollutant concentration monitor and a flow monitor, the maximum potential concentration of NO_X and the maximum potential flow rate of the unit under section 2.1 of appendix A of part 75 of this chapter;

(B) The NO_X authorized account representative shall submit a notification of certification retest dates and a new certification application in accordance with paragraphs (b)(3)(i) and (ii) of this section; and

(C) The owner or operator shall repeat all certification tests or other requirements that were failed by the monitoring system, as indicated in the permitting authority's notice of disapproval, no later than 30 unit operating days after the date of issuance of the notice of disapproval.

(c) Initial certification and recertification procedures for low mass emission units using the excepted methodologies under §75.19 of this chapter. The owner or operator of a gas-fired or oil-fired unit using the low mass emissions excepted methodology under §75.19 of this chapter shall meet the applicable general operating requirements of §75.10 of this chapter, the applicable requirements of §75.19 of this chapter, and the applicable certification requirements of §96.71 of this chapter, except that the excepted methodology shall be deemed provisionally certified for use under the NO_X Budget Trading Program, as of the following dates:

(1) For units that are reporting on an annual basis under §96.74(d);

(i) For a unit that has commences operation before its compliance deadline under §96.71(b), from January 1 of the year following submission of the certification application for approval to use the low mass emissions excepted methodology under §75.19 of this chapter until the completion of the period for the permitting authority review; or

(ii) For a unit that commences operation after its compliance deadline under §96.71(b), the date of submission of the certification application for approval to use the low mass emissions excepted methodology under §75.19 of this chapter until the completion of the period for permitting authority review, or

(2) For units that are reporting on a control period basis under §96.74(b)(3)(ii) of this part:

(i) For a unit that commenced operation before its compliance deadline under §96.71(b), where the certification application is submitted before May 1, from May 1 of the year of the submission of the certification application for approval to use the low mass emissions excepted methodology under §75.19 of this chapter until the completion of the period for the permitting authority review; or

(ii) For a unit that commenced operation before its compliance deadline under §96.71(b), where the certification application is submitted after May 1, from May 1 of the year following submission of the certification application for approval to use the low mass emissions excepted methodology under §75.19 of this chapter until the completion of the period for the permitting authority review; or

(iii) For a unit that commences operation after its compliance deadline under §96.71(b), where the unit commences operation before May 1, from May 1 of the year that the unit commenced operation, until the completion of the period for the permitting authority's review.

(iv) For a unit that has not operated after its compliance deadline under §96.71(b), where the certification application is submitted after May 1, but before October 1st, from the date of submission of a certification application for approval to use the low mass emissions excepted methodology under §75.19 of this chapter until the completion of the period for the permitting authority's review.

(d) Certification/recertification procedures for alternative monitoring systems. The NO_X authorized account representative representing the owner or operator of each unit applying to monitor using an alternative monitoring system approved by the Administrator and, if applicable, the permitting authority under subpart E of part 75 of this chapter shall apply for certification to the permitting authority prior to use of the system under the NO_X Trading Program. The NO_X authorized account representative shall

apply for recertification following a replacement, modification or change according to the procedures in paragraph (b) of this section. The owner or operator of an alternative monitoring system shall comply with the notification and application requirements for certification according to the procedures specified in paragraph (b)(3) of this section and § 75.20(f) of this chapter .

§ 96.72 Out of control periods.

(a) Whenever any monitoring system fails to meet the quality assurance requirements of appendix B of part 75 of this chapter, data shall be substituted using the applicable procedures in subpart D, appendix D, or appendix E of part 75 of this chapter.

(b) *Audit decertification.* Whenever both an audit of a monitoring system and a review of the initial certification or recertification application reveal that any system or component should not have been certified or recertified because it did not meet a particular performance specification or other requirement under § 96.71 or the applicable provisions of part 75 of this chapter, both at the time of the initial certification or recertification application submission and at the time of the audit, the permitting authority will issue a notice of disapproval of the certification status of such system or component. For the purposes of this paragraph, an audit shall be either a field audit or an audit of any information submitted to the permitting authority or the Administrator. By issuing the notice of disapproval, the permitting authority revokes prospectively the certification status of the system or component. The data measured and recorded by the system or component shall not be considered valid quality-assured data from the date of issuance of the notification of the revoked certification status until the date and time that the owner or operator completes subsequently approved initial certification or recertification tests. The owner or operator shall follow the initial certification or recertification procedures in § 96.71 for each disapproved system.

§ 96.73 Notifications.

The NO_X authorized account representative for a NO_X Budget unit shall submit written notice to the permitting authority and the Administrator in accordance with § 75.61 of this chapter, except that if the unit is not subject to an Acid Rain emissions limitation, the notification is only required to be sent to the permitting authority.

§ 96.74 Recordkeeping and reporting.

(a) *General provisions.* (1) The NO_X authorized account representative shall comply with all recordkeeping and reporting requirements in this section and with the requirements of § 96.10(e).

(2) If the NO_X authorized account representative for a NO_X Budget unit subject to an Acid Rain Emission limitation who signed and certified any submission that is made under subpart F or G of part 75 of this chapter and which includes data and information required under this subpart or subpart H of part 75 of this chapter is not the same person as the designated representative or the alternative designated representative for the unit under part 72 of this chapter, the submission must also be signed by the designated representative or the alternative designated representative.

(b) *Monitoring plans.* (1) The owner or operator of a unit subject to an Acid Rain emissions limitation shall comply with requirements of § 75.62 of this chapter, except that the monitoring plan shall also include all of the information required by subpart H of part 75 of this chapter.

(2) The owner or operator of a unit that is not subject to an Acid Rain emissions limitation shall comply with requirements of § 75.62 of this chapter, except that the monitoring plan is only required to include the information required by subpart H of part 75 of this chapter.

(c) *Certification applications.* The NO_X authorized account representative shall submit an application to the permitting authority within 45 days after completing all initial certification or recertification tests required under § 96.71 including the information required under subpart H of part 75 of this chapter.

(d) *Quarterly reports.* The NO_X authorized account representative shall submit quarterly reports, as follows:

(1) If a unit is subject to an Acid Rain emission limitation or if the owner or operator of the NO_X budget unit chooses to meet the annual reporting requirements of this subpart H, the NO_X authorized account representative shall submit a quarterly report for each calendar quarter beginning with:

(i) For units that elect to comply with the early reduction credit provisions under §96.55 of this part, the calender quarter that includes the date of initial provisional certification under §96.71(b)(3)(iii). Data shall be reported from the date and hour corresponding to the date and hour of provisional certification; or

(ii) For units commencing operation prior to May 1, 2002 that are not required to certify monitors by May 1, 2000 under §96.70(b)(1), the earlier of the calender quarter that includes the date of initial provisional certification under §96.71(b)(3)(iii) or, if the certification tests are not completed by May 1, 2002, the partial calender quarter from May 1, 2002 through June 30, 2002. Data shall be recorded and reported from the earlier of the date and hour corresponding to the date and hour of provisional certification or the first hour on May 1, 2002; or

(iii) For a unit that commences operation after May 1, 2002, the calendar quarter in which the unit commences operation, Data shall be reported from the date and hour corresponding to when the unit commenced operation.

(2) If a NO_X budget unit is not subject to an Acid Rain emission limitation, then the NO_X authorized account representative shall either:

(i) Meet all of the requirements of part 75 related to monitoring and reporting NO_X mass emissions during the entire year and meet the reporting deadlines specified in paragraph (d)(1) of this section; or

(ii) Submit quarterly reports only for the periods from the earlier of May 1 or the date and hour that the owner or operator successfully completes all of the recertification tests required under §75.74(d)(3) through September 30 of each year in accordance with the provisions of §75.74(b) of this chapter. The NO_X authorized account representative shall submit a quarterly report for each calendar quarter, beginning with:

(*A*) For units that elect to comply with the early reduction credit provisions under §96.55, the calender quarter that includes the date of initial provisional certification under §96.71(b)(3)(iii). Data shall be reported from the date and hour corresponding to the date and hour of provisional certification; or

(*B*) For units commencing operation prior to May 1, 2002 that are not required to certify monitors by May 1, 2000 under §96.70(b)(1), the earlier of the calender quarter that includes the date of initial provisional certification under §96.71(b)(3)(iii), or if the certification tests are not completed by May 1, 2002, the partial calender quarter from May 1, 2002 through June 30, 2002. Data shall be reported from the earlier of the date and hour corresponding to the date and hour of provisional certification or the first hour of May 1, 2002; or

(*C*) For units that commence operation after May 1, 2002 during the control period, the calender quarter in which the unit commences operation. Data shall be reported from the date and hour corresponding to when the unit commenced operation; or

(*D*) For units that commence operation after May 1, 2002 and before May 1 of the year in which the unit commences operation, the earlier of the calender quarter that includes the date of initial provisional certification under §96.71(b)(3)(iii) or, if the certification tests are not completed by May 1 of the year in which the unit commences operation, May 1 of the year in which the unit commences operation. Data shall be reported from the earlier of the date and hour corresponding to the date and hour of provisional certification or the first hour of May 1 of the year after the unit commences operation.

(*E*) For units that commence operation after May 1, 2002 and after September 30 of the year in which the unit commences operation, the earlier of the calender quarter that includes the date of initial provisional certification under §96.71(b)(3)(iii) or, if the certification tests are not completed by May

1 of the year after the unit commences operation, May 1 of the year after the unit commences operation. Data shall be reported from the earlier of the date and hour corresponding to the date and hour of provisional certification or the first hour of May 1 of the year after the unit commences operation.

(3) The NO_X authorized account representative shall submit each quarterly report to the Administrator within 30 days following the end of the calendar quarter covered by the report. Quarterly reports shall be submitted in the manner specified in subpart H of part 75 of this chapter and § 75.64 of this chapter.

(i) For units subject to an Acid Rain Emissions limitation, quarterly reports shall include all of the data and information required in subpart H of part 75 of this chapter for each NO_X Budget unit (or group of units using a common stack) as well as information required in subpart G of part 75 of this chapter.

(ii) For units not subject to an Acid Rain Emissions limitation, quarterly reports are only required to include all of the data and information required in subpart H of part 75 of this chapter for each NO_X Budget unit (or group of units using a common stack).

(4) *Compliance certification.* The NO_X authorized account representative shall submit to the Administrator a compliance certification in support of each quarterly report based on reasonable inquiry of those persons with primary responsibility for ensuring that all of the unit's emissions are correctly and fully monitored. The certification shall state that:

(i) The monitoring data submitted were recorded in accordance with the applicable requirements of this subpart and part 75 of this chapter, including the quality assurance procedures and specifications; and

(ii) For a unit with add-on NO_X emission controls and for all hours where data are substituted in accordance with § 75.34(a)(1) of this chapter, the add-on emission controls were operating within the range of parameters listed in the monitoring plan and the substitute values do not systematically underestimate NO_X emissions; and

(iii) For a unit that is reporting on a control period basis under § 96.74(d) the NO_X emission rate and NO_X concentration values substituted for missing data under subpart D of part 75 of this chapter are calculated using only values from a control period and do not systematically underestimate NO_X emissions.

§ 96.75 Petitions.

(a) The NO_X authorized account representative of a NO_X Budget unit that is subject to an Acid Rain emissions limitation may submit a petition under § 75.66 of this chapter to the Administrator requesting approval to apply an alternative to any requirement of this subpart.

(1) Application of an alternative to any requirement of this subpart is in accordance with this subpart only to the extent that the petition is approved by the Administrator, in consultation with the permitting authority.

(2) Notwithstanding paragraph (a)(1) of this section, if the petition requests approval to apply an alternative to a requirement concerning any additional CEMS required under the common stack provisions of § 75.72 of this chapter, the petition is governed by paragraph (b) of this section.

(b) The NO_X authorized account representative of a NO_X Budget unit that is not subject to an Acid Rain emissions limitation may submit a petition under § 75.66 of this chapter to the permitting authority and the Administrator requesting approval to apply an alternative to any requirement of this subpart.

(1) The NO_X authorized account representative of a NO_X Budget unit that is subject to an Acid Rain emissions limitation may submit a petition under § 75.66 of this chapter to the permitting authority and the Administrator requesting approval to apply an alternative to a requirement concerning any additional CEMS required under the common stack provisions of § 75.72 of this chapter or a NO_X concentration CEMS used under 75.71(a)(2) of this chapter.

(2) Application of an alternative to any requirement of this subpart is in accordance with this subpart only to the extent the petition under paragraph (b) of this section is approved by

both the permitting authority and the Administrator.

§ 96.76 Additional requirements to provide heat input data for allocations purposes.

(a) The owner or operator of a unit that elects to monitor and report NO_X Mass emissions using a NO_X concentration system and a flow system shall also monitor and report heat input at the unit level using the procedures set forth in part 75 of this chapter for any source located in a state developing source allocations based upon heat input.

(b) The owner or operator of a unit that monitor and report NO_X Mass emissions using a NO_X concentration system and a flow system shall also monitor and report heat input at the unit level using the procedures set forth in part 75 of this chapter for any source that is applying for early reduction credits under § 96.55.

Subpart I—Individual Unit Opt-ins

§ 96.80 Applicability.

A unit that is in the State, is not a NO_X Budget unit under § 96.4, vents all of its emissions to a stack, and is operating, may qualify, under this subpart, to become a NO_X Budget opt-in source. A unit that is a NO_X Budget unit, is covered by a retired unit exemption under § 96.5 that is in effect, or is not operating is not eligible to become a NO_X Budget opt-in source.

§ 96.81 General.

Except otherwise as provided in this part, a NO_X Budget opt-in source shall be treated as a NO_X Budget unit for purposes of applying subparts A through H of this part.

§ 96.82 NO_X authorized account representative.

A unit for which an application for a NO_X Budget opt-in permit is submitted and not denied or withdrawn, or a NO_X Budget opt-in source, located at the same source as one or more NO_X Budget units, shall have the same NO_X authorized account representative as such NO_X Budget units.

§ 96.83 Applying for NO_X Budget opt-in permit.

(a) *Applying for initial NO_X* Budget opt-in permit. In order to apply for an initial NO_X Budget opt-in permit, the NO_X authorized account representative of a unit qualified under § 96.80 may submit to the permitting authority at any time, except as provided under § 96.86(g):

(1) A complete NO_X Budget permit application under § 96.22;

(2) A monitoring plan submitted in accordance with subpart H of this part; and

(3) A complete account certificate of representation under § 96.13, if no NO_X authorized account representative has been previously designated for the unit.

(b) *Duty to reapply*. The NO_X authorized account representative of a NO_X Budget opt-in source shall submit a complete NO_X Budget permit application under § 96.22 to renew the NO_X Budget opt-in permit in accordance with § 96.21(c) and, if applicable, an updated monitoring plan in accordance with subpart H of this part.

§ 96.84 Opt-in process.

The permitting authority will issue or deny a NO_X Budget opt-in permit for a unit for which an initial application for a NO_X Budget opt-in permit under § 96.83 is submitted, in accordance with § 96.20 and the following:

(a) *Interim review of monitoring plan*. The permitting authority will determine, on an interim basis, the sufficiency of the monitoring plan accompanying the initial application for a NO_X Budget opt-in permit under § 96.83. A monitoring plan is sufficient, for purposes of interim review, if the plan appears to contain information demonstrating that the NO_X emissions rate and heat input of the unit are monitored and reported in accordance with subpart H of this part. A determination of sufficiency shall not be construed as acceptance or approval of the unit's monitoring plan.

(b) If the permitting authority determines that the unit's monitoring plan is sufficient under paragraph (a) of this section and after completion of monitoring system certification under subpart H of this part, the NO_X emissions

rate and the heat input of the unit shall be monitored and reported in accordance with subpart H of this part for one full control period during which monitoring system availability is not less than 90 percent and during which the unit is in full compliance with any applicable State or Federal emissions or emissions-related requirements. Solely for purposes of applying the requirements in the prior sentence, the unit shall be treated as a ''NO_X Budget unit'' prior to issuance of a NO_X Budget opt-in permit covering the unit.

(c) Based on the information monitored and reported under paragraph (b) of this section, the unit's baseline heat rate shall be calculated as the unit's total heat input (in mmBtu) for the control period and the unit's baseline NO_X emissions rate shall be calculated as the unit's total NO_X emissions (in lb) for the control period divided by the unit's baseline heat rate.

(d) After calculating the baseline heat input and the baseline NO_X emissions rate for the unit under paragraph (c) of this section, the permitting authority will serve a draft NO_X Budget opt-in permit on the NO_X authorized account representative of the unit.

(e) *Confirmation of intention to opt-in.* Within 20 days after the issuance of the draft NO_X Budget opt-in permit, the NO_X authorized account representative of the unit must submit to the permitting authority a confirmation of the intention to opt in the unit or a withdrawal of the application for a NO_X Budget opt-in permit under § 96.83. The permitting authority will treat the failure to make a timely submission as a withdrawal of the NO_X Budget opt-in permit application.

(f) *Issuance of draft NO_X Budget opt-in permit.* If the NO_X authorized account representative confirms the intention to opt-in the unit under paragraph (e) of this section, the permitting authority will issue the draft NO_X Budget opt-in permit in accordance with § 96.20.

(g) Notwithstanding paragraphs (a) through (f) of this section, if at any time before issuance of a draft NO_X Budget opt-in permit for the unit, the permitting authority determines that the unit does not qualify as a NO_X Budget opt-in source under § 96.80, the permitting authority will issue a draft denial of a NO_X Budget opt-in permit for the unit in accordance with § 96.20.

(h) *Withdrawal of application for NO_X Budget opt-in permit.* A NO_X authorized account representative of a unit may withdraw its application for a NO_X Budget opt-in permit under § 96.83 at any time prior to the issuance of the final NO_X Budget opt-in permit. Once the application for a NO_X Budget opt-in permit is withdrawn, a NO_X authorized account representative wanting to reapply must submit a new application for a NO_X Budget permit under § 96.83.

(i) *Effective date.* The effective date of the initial NO_X Budget opt-in permit shall be May 1 of the first control period starting after the issuance of the initial NO_X Budget opt-in permit by the permitting authority. The unit shall be a NO_X Budget opt-in source and a NO_X Budget unit as of the effective date of the initial NO_X Budget opt-in permit.

§ 96.85 NO_X Budget opt-in permit contents.

(a) Each NO_X Budget opt-in permit (including any draft or proposed NO_X Budget opt-in permit, if applicable) will contain all elements required for a complete NO_X Budget opt-in permit application under § 96.22 as approved or adjusted by the permitting authority.

(b) Each NO_X Budget opt-in permit is deemed to incorporate automatically the definitions of terms under § 96.2 and, upon recordation by the Administrator under subpart F, G, or I of this part, every allocation, transfer, or deduction of NO_X allowances to or from the compliance accounts of each NO_X Budget opt-in source covered by the NO_X Budget opt-in permit or the overdraft account of the NO_X Budget source where the NO_X Budget opt-in source is located.

§ 96.86 Withdrawal from NO_X Budget Trading Program.

(a) *Requesting withdrawal.* To withdraw from the NO_X Budget Trading Program, the NO_X authorized account representative of a NO_X Budget opt-in source shall submit to the permitting authority a request to withdraw effective as of a specified date prior to May 1 or after September 30. The submission shall be made no later than 90

days prior to the requested effective date of withdrawal.

(b) *Conditions for withdrawal.* Before a NO_X Budget opt-in source covered by a request under paragraph (a) of this section may withdraw from the NO_X Budget Trading Program and the NO_X Budget opt-in permit may be terminated under paragraph (e) of this section, the following conditions must be met:

(1) For the control period immediately before the withdrawal is to be effective, the NO_X authorized account representative must submit or must have submitted to the permitting authority an annual compliance certification report in accordance with §96.30.

(2) If the NO_X Budget opt-in source has excess emissions for the control period immediately before the withdrawal is to be effective, the Administrator will deduct or has deducted from the NO_X Budget opt-in source's compliance account, or the overdraft account of the NO_X Budget source where the NO_X Budget opt-in source is located, the full amount required under §96.54(d) for the control period.

(3) After the requirements for withdrawal under paragraphs (b)(1) and (2) of this section are met, the Administrator will deduct from the NO_X Budget opt-in source's compliance account, or the overdraft account of the NO_X Budget source where the NO_X Budget opt-in source is located, NO_X allowances equal in number to and allocated for the same or a prior control period as any NO_X allowances allocated to that source under §96.88 for any control period for which the withdrawal is to be effective. The Administrator will close the NO_X Budget opt-in source's compliance account and will establish, and transfer any remaining allowances to, a new general account for the owners and operators of the NO_X Budget opt-in source. The NO_X authorized account representative for the NO_X Budget opt-in source shall become the NO_X authorized account representative for the general account.

(c) A NO_X Budget opt-in source that withdraws from the NO_X Budget Trading Program shall comply with all requirements under the NO_X Budget Trading Program concerning all years for which such NO_X Budget opt-in source was a NO_X Budget opt-in source, even if such requirements arise or must be complied with after the withdrawal takes effect.

(d) *Notification.* (1) After the requirements for withdrawal under paragraphs (a) and (b) of this section are met (including deduction of the full amount of NO_X allowances required), the permitting authority will issue a notification to the NO_X authorized account representative of the NO_X Budget opt-in source of the acceptance of the withdrawal of the NO_X Budget opt-in source as of a specified effective date that is after such requirements have been met and that is prior to May 1 or after September 30.

(2) If the requirements for withdrawal under paragraphs (a) and (b) of this section are not met, the permitting authority will issue a notification to the NO_X authorized account representative of the NO_X Budget opt-in source that the NO_X Budget opt-in source's request to withdraw is denied. If the NO_X Budget opt-in source's request to withdraw is denied, the NO_X Budget opt-in source shall remain subject to the requirements for a NO_X Budget opt-in source.

(e) *Permit amendment.* After the permitting authority issues a notification under paragraph (d)(1) of this section that the requirements for withdrawal have been met, the permitting authority will revise the NO_X Budget permit covering the NO_X Budget opt-in source to terminate the NO_X Budget opt-in permit as of the effective date specified under paragraph (d)(1) of this section. A NO_X Budget opt-in source shall continue to be a NO_X Budget opt-in source until the effective date of the termination.

(f) *Reapplication upon failure to meet conditions of withdrawal.* If the permitting authority denies the NO_X Budget opt-in source's request to withdraw, the NO_X authorized account representative may submit another request to withdraw in accordance with paragraphs (a) and (b) of this section.

(g) *Ability to return to the NO_X* Budget Trading Program. Once a NO_X Budget opt-in source withdraws from the NO_X Budget Trading Program and its NO_X Budget opt-in permit is terminated under this section, the NO_X authority account representative may not submit

another application for a NO_X Budget opt-in permit under § 96.83 for the unit prior to the date that is 4 years after the date on which the terminated NO_X Budget opt-in permit became effective.

§ 96.87 Change in regulatory status.

(a) *Notification.* When a NO_X Budget opt-in source becomes a NO_X Budget unit under § 96.4, the NO_X authorized account representative shall notify in writing the permitting authority and the Administrator of such change in the NO_X Budget opt-in source's regulatory status, within 30 days of such change.

(b) *Permitting authority's and Administrator's action.* (1)(i) When the NO_X Budget opt-in source becomes a NO_X Budget unit under § 96.4, the permitting authority will revise the NO_X Budget opt-in source's NO_X Budget opt-in permit to meet the requirements of a NO_X Budget permit under § 96.23 as of an effective date that is the date on which such NO_X Budget opt-in source becomes a NO_X Budget unit under § 96.4.

(ii)(A) The Administrator will deduct from the compliance account for the NO_X Budget unit under paragraph (b)(1)(i) of this section, or the overdraft account of the NO_X Budget source where the unit is located, NO_X allowances equal in number to and allocated for the same or a prior control period as:

(*1*) Any NO_X allowances allocated to the NO_X Budget unit (as a NO_X Budget opt-in source) under § 96.88 for any control period after the last control period during which the unit's NO_X Budget opt-in permit was effective; and

(*2*) If the effective date of the NO_X Budget permit revision under paragraph (b)(1)(i) of this section is during a control period, the NO_X allowances allocated to the NO_X Budget unit (as a NO_X Budget opt-in source) under § 96.88 for the control period multiplied by the ratio of the number of days, in the control period, starting with the effective date of the permit revision under paragraph (b)(1)(i) of this section, divided by the total number of days in the control period.

(B) The NO_X authorized account representative shall ensure that the compliance account of the NO_X Budget unit under paragraph (b)(1)(i) of this section, or the overdraft account of the NO_X Budget source where the unit is located, includes the NO_X allowances necessary for completion of the deduction under paragraph (b)(1)(ii)(A) of this section. If the compliance account or overdraft account does not contain sufficient NO_X allowances, the Administrator will deduct the required number of NO_X allowances, regardless of the control period for which they were allocated, whenever NO_X allowances are recorded in either account.

(iii)(A) For every control period during which the NO_X Budget permit revised under paragraph (b)(1)(i) of this section is effective, the NO_X Budget unit under paragraph (b)(1)(i) of this section will be treated, solely for purposes of NO_X allowance allocations under § 96.42, as a unit that commenced operation on the effective date of the NO_X Budget permit revision under paragraph (b)(1)(i) of this section and will be allocated NO_X allowances under § 96.42.

(B) Notwithstanding paragraph (b)(1)(iii)(A) of this section, if the effective date of the NO_X Budget permit revision under paragraph (b)(1)(i) of this section is during a control period, the following number of NO_X allowances will be allocated to the NO_X Budget unit under paragraph (b)(1)(i) of this section under § 96.42 for the control period: the number of NO_X allowances otherwise allocated to the NO_X Budget unit under § 96.42 for the control period multiplied by the ratio of the number of days, in the control period, starting with the effective date of the permit revision under paragraph (b)(1)(i) of this section, divided by the total number of days in the control period.

(2)(i) When the NO_X authorized account representative of a NO_X Budget opt-in source does not renew its NO_X Budget opt-in permit under § 96.83(b), the Administrator will deduct from the NO_X Budget opt-in unit's compliance account, or the overdraft account of the NO_X Budget source where the NO_X Budget opt-in source is located, NO_X allowances equal in number to and allocated for the same or a prior control period as any NO_X allowances allocated to the NO_X Budget opt-in source under § 96.88 for any control period after the last control period for which the NO_X

Budget opt-in permit is effective. The NO_X authorized account representative shall ensure that the NO_X Budget opt-in source's compliance account or the overdraft account of the NO_X Budget source where the NO_X Budget opt-in source is located includes the NO_X allowances necessary for completion of such deduction. If the compliance account or overdraft account does not contain sufficient NO_X allowances, the Administrator will deduct the required number of NO_X allowances, regardless of the control period for which they were allocated, whenever NO_X allowances are recorded in either account.

(ii) After the deduction under paragraph (b)(2)(i) of this section is completed, the Administrator will close the NO_X Budget opt-in source's compliance account. If any NO_X allowances remain in the compliance account after completion of such deduction and any deduction under §96.54, the Administrator will close the NO_X Budget opt-in source's compliance account and will establish, and transfer any remaining allowances to, a new general account for the owners and operators of the NO_X Budget opt-in source. The NO_X authorized account representative for the NO_X Budget opt-in source shall become the NO_X authorized account representative for the general account.

§96.88 NO_X allowance allocations to opt-in units.

(a) *NO_X allowance allocation.* (1) By December 31 immediately before the first control period for which the NO_X Budget opt-in permit is effective, the permitting authority will allocate NO_X allowances to the NO_X Budget opt-in source and submit to the Administrator the allocation for the control period in accordance with paragraph (b) of this section.

(2) By no later than December 31, after the first control period for which the NO_X Budget opt-in permit is in effect, and December 31 of each year thereafter, the permitting authority will allocate NO_X allowances to the NO_X Budget opt-in source, and submit to the Administrator allocations for the next control period, in accordance with paragraph (b) of this section.

(b) For each control period for which the NO_X Budget opt-in source has an approved NO_X Budget opt-in permit, the NO_X Budget opt-in source will be allocated NO_X allowances in accordance with the following procedures:

(1) The heat input (in mmBtu) used for calculating NO_X allowance allocations will be the lesser of:

(i) The NO_X Budget opt-in source's baseline heat input determined pursuant to §96.84(c); or

(ii) The NO_X Budget opt-in source's heat input, as determined in accordance with subpart H of this part, for the control period in the year prior to the year of the control period for which the NO_X allocations are being calculated.

(2) The permitting authority will allocate NO_X allowances to the NO_X Budget opt-in source in an amount equaling the heat input (in mmBtu) determined under paragraph (b)(1) of this section multiplied by the lesser of:

(i) The NO_X Budget opt-in source's baseline NO_X emissions rate (in lb/mmBtu) determined pursuant to §96.84(c); or

(ii) The most stringent State or Federal NO_X emissions limitation applicable to the NO_X Budget opt-in source during the control period.

Subpart J—Mobile and Area Sources [Reserved]

PART 97—FEDERAL NO_X BUDGET TRADING PROGRAM

Subpart A—NO_X Budget Trading Program General Provisions

Sec.
97.1 Purpose.
97.2 Definitions.
97.3 Measurements, abbreviations, and acronyms.
97.4 Applicability.
97.5 Retired unit exemption.
97.6 Standard requirements.
97.7 Computation of time.

Subpart B—NO_X Authorized Account Representative for NO_X Budget Sources

97.10 Authorization and responsibilities of NO_X authorized account representative.
97.11 Alternate NO_X authorized account representative.
97.12 Changing NO_X authorized account representative and alternate NO_X authorized

account representative; changes in owners and operators.
97.13 Account certificate of representation.
97.14 Objections concerning NO_X authorized account representative.

Subpart C—Permits

97.20 General NO_X Budget Trading Program permit requirements.
97.21 Submission of NO_X Budget permit applications.
97.22 Information requirements for NO_X Budget permit applications.
97.23 NO_X Budget permit contents.
97.24 NO_X Budget permit revisions.

Subpart D—Compliance Certification

97.30 Compliance certification report.
97.31 Administrator's action on compliance certifications.

Subpart E—NO_X Allowance Allocations

97.40 Trading program budget.
97.41 Timing requirements for NO_X allowance allocations.
97.42 NO_X allowance allocations.
97.43 Compliance supplement pool.

Subpart F—NO_X Allowance Tracking System

97.50 NO_X Allowance Tracking System accounts.
97.51 Establishment of accounts.
97.52 NO_X Allowance Tracking System responsibilities of NO_X authorized account representative.
97.53 Recordation of NO_X allowance allocations.
97.54 Compliance.
97.55 Banking.
97.56 Account error.
97.57 Closing of general accounts.

Subpart G—NO_X Allowance Transfers

97.60 Submission of NO_X allowance transfers.
97.61 EPA recordation.
97.62 Notification.

Subpart H—Monitoring and Reporting

97.70 General requirements.
97.71 Initial certification and recertification procedures.
97.72 Out of control periods.
97.73 Notifications.
97.74 Recordkeeping and reporting.
97.75 Petitions.
97.76 Additional requirements to provide heat input data.

Subpart I—Individual Unit Opt-ins

97.80 Applicability.
97.81 General.
97.82 NO_X authorized account representative.
97.83 Applying for NO_X Budget opt-in permit.
97.84 Opt-in process.
97.85 NO_X Budget opt-in permit contents.
97.86 Withdrawal from NO_X Budget Trading Program.
97.87 Change in regulatory status.
97.88 NO_X allowance allocations to opt-in units.

APPENDIX A TO PART 97—FINAL SECTION 126 RULE: EGU ALLOCATIONS, 2003–2007
APPENDIX B TO PART 97—FINAL SECTION 126 RULE: NON-EGU ALLOCATIONS, 2003–2007
APPENDIX C TO PART 97—FINAL SECTION 126 RULE: TRADING BUDGET, 2003–2007
APPENDIX D TO PART 97—FINAL SECTION 126 RULE: STATE COMPLIANCE SUPPLEMENT POOLS FOR THE SECTION 126 FINAL RULE (TONS)

AUTHORITY: 42 U.S.C. 7401, 7403, 7426, and 7601.

SOURCE: 65 FR 2727, Jan. 18, 2000, unless otherwise noted.

Subpart A—NO_X Budget Trading Program General Provisions

§ 97.1 Purpose.

This part establishes general provisions and the applicability, permitting, allowance, excess emissions, monitoring, and opt-in provisions for the federal NO_X Budget Trading Program, under section 126 of the CAA and § 52.34 of this chapter, as a means of mitigating the interstate transport of ozone and nitrogen oxides, an ozone precursor.

§ 97.2 Definitions.

The terms used in this part shall have the meanings set forth in this section as follows:

Account number means the identification number given by the Administrator to each NO_X Allowance Tracking System account.

Acid Rain emissions limitation means, as defined in § 72.2 of this chapter, a limitation on emissions of sulfur dioxide or nitrogen oxides under the Acid Rain Program under title IV of the Clean Air Act.

Administrator means the Administrator of the United States Environmental Protection Agency or the Administrator's duly authorized representative.

Allocate or *allocation* means, with regard to NO_X allowances, the determination by the Administrator of the number of NO_X allowances to be initially credited to a NO_X Budget unit or an allocation set-aside.

Automated data acquisition and handling system or *DAHS* means that component of the CEMS, or other emissions monitoring system approved for use under subpart H of this part, designed to interpret and convert individual output signals from pollutant concentration monitors, flow monitors, diluent gas monitors, and other component parts of the monitoring system to produce a continuous record of the measured parameters in the measurement units required by subpart H of this part.

Boiler means an enclosed fossil or other fuel-fired combustion device used to produce heat and to transfer heat to recirculating water, steam, or other medium.

Clean Air Act means the Clean Air Act, 42 U.S.C. 7401 et seq.

Combined cycle system means a system comprised of one or more combustion turbines, heat recovery steam generators, and steam turbines configured to improve overall efficiency of electricity generation or steam production.

Combustion turbine means an enclosed fossil or other fuel-fired device that is comprised of a compressor, a combustor, and a turbine, and in which the flue gas resulting from the combustion of fuel in the combustor passes through the turbine, rotating the turbine.

Commence commercial operation means, with regard to a unit that serves a generator, to have begun to produce steam, gas, or other heated medium used to generate electricity for sale or use, including test generation. Except as provided in §97.4(b), §97.5, or subpart I of this part, for a unit that is a NO_X Budget unit under §97.4(a) on the date the unit commences commercial operation, such date shall remain the unit's date of commencement of commercial operation even if the unit is subsequently modified, reconstructed, or repowered. Except as provided in §97.4(b), §97.5, or subpart I of this part, for a unit that is not a NO_X Budget unit under §97.4(a) on the date the unit commences commercial operation, the date the unit becomes a NO_X Budget unit under §97.4(a) shall be the unit's date of commencement of commercial operation.

Commence operation means to have begun any mechanical, chemical, or electronic process, including, with regard to a unit, start-up of a unit's combustion chamber. Except as provided in §97.4(b), §97.5, or subpart I of this part for a unit that is a NO_X Budget unit under §97.4(a) on the date of commencement of operation, such date shall remain the unit's date of commencement of operation even if the unit is subsequently modified, reconstructed, or repowered. Except as provided in §97.4(b), §97.5, or subpart I of this part, for a unit that is not a NO_X Budget unit under §97.4(a) on the date of commencement of operation, the date the unit becomes a NO_X Budget unit under §97.4(a) shall be the unit's date of commencement of operation.

Common stack means a single flue through which emissions from two or more units are exhausted.

Compliance account means a NO_X Allowance Tracking System account, established by the Administrator for a NO_X Budget unit under subpart F of this part, in which the NO_X allowance allocations for the unit are initially recorded and in which are held NO_X allowances available for use by the unit for a control period for the purpose of meeting the unit's NO_X Budget emissions limitation.

Continuous emission monitoring system or *CEMS* means the equipment required under subpart H of this part to sample, analyze, measure, and provide, by readings taken at least once every 15 minutes of the measured parameters, a permanent record of nitrogen oxides emissions, expressed in tons per hour for nitrogen oxides. The following systems are component parts included, to the extent consistent with subpart H of this part and part 75 of this chapter, in a continuous emission monitoring system:

(1) Flow monitor;

(2) Nitrogen oxides pollutant concentration monitors;

(3) Diluent gas monitor (oxygen or carbon dioxide);

(4) A continuous moisture monitor; and

(5) An automated data acquisition and handling system.

Control period means the period beginning May 1 of a year and ending on September 30 of the same year, inclusive.

Electricity for sale under firm contract to the grid means electricity for sale where the capacity involved is intended to be available at all times during the period covered by a guaranteed commitment to deliver, even under adverse conditions.

Emissions means air pollutants exhausted from a unit or source into the atmosphere, as measured, recorded, and reported to the Administrator by the NO_X authorized account representative and as determined by the Administrator in accordance with subpart H of this part.

Energy Information Administration means the Energy Information Administration of the United States Department of Energy.

Excess emissions means any tonnage of nitrogen oxides emitted by a NO_X Budget unit during a control period that exceeds the NO_X Budget emissions limitation for the unit.

Fossil fuel means natural gas, petroleum, coal, or any form of solid, liquid, or gaseous fuel derived from such material.

Fossil fuel fired means, with regard to a unit:

(1) For units that commenced operation before January 1, 1996, the combination of fossil fuel, alone or in combination with any other fuel, where fossil fuel actually combusted comprises more than 50 percent of the annual heat input on a Btu basis during 1995, or, if a unit had no heat input in 1995, during the last year of operation of the unit prior to 1995;

(2) For units that commenced operation on or after January 1, 1996 and before January 1, 1997, the combination of fossil fuel, alone or in combination with any other fuel, where fossil fuel actually combusted comprises more than 50 percent of the annual heat input on a Btu basis during 1996; or

(3) For units that commence operation on or after January 1, 1997:

(i) The combination of fossil fuel, alone or in combination with any other fuel, where fossil fuel actually combusted comprises more than 50 percent of the annual heat input on a Btu basis during any year; or

(ii) The combination of fossil fuel, alone or in combination with any other fuel, where fossil fuel is projected to comprise more than 50 percent of the annual heat input on a Btu basis during any year, provided that the unit shall be ''fossil fuel-fired'' as of the date, during such year, on which the unit begins combusting fossil fuel.

General account means a NO_X Allowance Tracking System account, established under subpart F of this part, that is not a compliance account or an overdraft account.

Generator means a device that produces electricity.

Heat input means, with regard to a specified period to time, the product (in mmBtu/time) of the gross calorific value of the fuel (in Btu/lb) divided by 1,000,000 Btu/mmBtu and multiplied by the fuel feed rate into a combustion device (in lb of fuel/time), as measured, recorded, and reported to the Administrator by the NO_X authorized account representative and as determined by the Administrator in accordance with subpart H of this part. Heat input does not include the heat derived from preheated combustion air, recirculated flue gases, or exhaust from other sources.

Heat input rate means the amount of heat input (in mmBtu) divided by unit operating time (in hr) or, with regard to a specific fuel, the amount of heat input attributed to the fuel (in mmBtu) divided by the unit operating time (in hr) during which the unit combusts the fuel.

Life-of-the-unit, firm power contractual arrangement means a unit participation power sales agreement under which a utility or industrial customer reserves, or is entitled to receive, a specified amount or percentage of nameplate capacity and associated energy from any specified unit and pays its proportional amount of such unit's total costs, pursuant to a contract:

(1) For the life of the unit;

(2) For a cumulative term of no less than 30 years, including contracts that permit an election for early termination; or

(3) For a period equal to or greater than 25 years or 70 percent of the economic useful life of the unit determined as of the time the unit is built, with option rights to purchase or release some portion of the nameplate capacity and associated energy generated by the unit at the end of the period.

Maximum design heat input means the ability of a unit to combust a stated maximum amount of fuel per hour (in mmBtu/hr) on a steady state basis, as determined by the physical design and physical characteristics of the unit.

Maximum potential hourly heat input means an hourly heat input (in mmBtu/hr) used for reporting purposes when a unit lacks certified monitors to report heat input. If the unit intends to use appendix D of part 75 of this chapter to report heat input, this value should be calculated, in accordance with part 75 of this chapter, using the maximum fuel flow rate and the maximum gross calorific value. If the unit intends to use a flow monitor and a diluent gas monitor, this value should be reported, in accordance with part 75 of this chapter, using the maximum potential flowrate and either the maximum carbon dioxide concentration (in percent CO_2) or the minimum oxygen concentration (in percent O2).

Maximum potential NO_X emission rate means the emission rate of nitrogen oxides (in lb/mmBtu) calculated in accordance with section 3 of appendix F of part 75 of this chapter, using the maximum potential concentration of NO_X under section 2 of appendix A of part 75 of this chapter, and either the maximum oxygen concentration (in percent O2) or the minimum carbon dioxide concentration (in percent CO_2), under all operating conditions of the unit except for unit start up, shutdown, and upsets.

Maximum rated hourly heat input means a unit specific maximum hourly heat input (in mmBtu/hr) which is the higher of the manufacturer's maximum rated hourly heat input or the highest observed hourly heat input.

Monitoring system means any monitoring system that meets the requirements of subpart H of this part, including a continuous emissions monitoring system, an excepted monitoring system, or an alternative monitoring system.

Most stringent State or Federal NO_X emissions limitation means, with regard to a NO_X Budget opt-in unit, the lowest NO_X emissions limitation (in lb/mmBtu) that is applicable to the unit under State or Federal law, regardless of the averaging period to which the emissions limitation applies.

Nameplate capacity means the maximum electrical generating output (in MWe) that a generator can sustain over a specified period of time when not restricted by seasonal or other deratings as measured in accordance with the United States Department of Energy standards.

Non-title V permit means a federally enforceable permit administered by the permitting authority pursuant to the Clean Air Act and regulatory authority under the Clean Air Act, other than title V of the Clean Air Act and part 70 or 71 of this chapter.

NO_X allowance means a limited authorization by the Administrator under the NO_X Budget Trading Program to emit up to one ton of nitrogen oxides during the control period of the specified year or of any year thereafter, except as provided under §97.54(f). No provision of the NO_X Budget Trading Program, the NO_X Budget permit application, the NO_X Budget permit, or an exemption under §97.4(b) or §97.5 and no provision of law shall be construed to limit the authority of the United States to terminate or limit such authorization, which does not constitute a property right. For purposes of all sections of this part except §97.41, §97.42, §97.43, or §97.88, ''NO_X allowance'' also includes an authorization to emit up to one ton of nitrogen oxides during the control period of the specified year or of any year thereafter by the permitting authority or the Administrator in accordance with a State NO_X Budget Trading Program established, and approved and administered by the Administrator, pursuant to §51.121 of this chapter.

NO_X allowance deduction or *deduct NO_X allowances* means the permanent withdrawal of NO_X allowances by the Administrator from a NO_X Allowance Tracking System compliance account or overdraft account to account for the

number of tons of NO_X emissions from a NO_X Budget unit for a control period, determined in accordance with subparts H and F of this part, or for any other NO_X allowance withdrawal requirement under this part.

NO_X Allowance Tracking System means the system by which the Administrator records allocations, deductions, and transfers of NO_X allowances under the NO_X Budget Trading Program.

NO_X Allowance Tracking System account means an account in the NO_X Allowance Tracking System established by the Administrator for purposes of recording the allocation, holding, transferring, or deducting of NO_X allowances.

NO_X allowance transfer deadline means midnight of November 30 or, if November 30 is not a business day, midnight of the first business day thereafter and is the deadline by which NO_X allowances must be submitted for recordation in a NO_X Budget unit's compliance account, or the overdraft account of the source where the unit is located, in order to meet the unit's NO_X Budget emissions limitation for the control period immediately preceding such deadline.

NO_X allowances held or *hold NO_X allowances* means the NO_X allowances recorded by the Administrator, or submitted to the Administrator for recordation, in accordance with subparts F and G of this part, in a NO_X Allowance Tracking System account.

NO_X authorized account representative means, for a NO_X Budget source or NO_X Budget unit at the source, the natural person who is authorized by the owners and operators of the source and all NO_X Budget units at the source, in accordance with subpart B of this part, to represent and legally bind each owner and operator in matters pertaining to the NO_X Budget Trading Program or, for a general account, the natural person who is authorized, in accordance with subpart F of this part, to transfer or otherwise dispose of NO_X allowances held in the general account.

NO_X Budget emissions limitation means, for a NO_X Budget unit, the tonnage equivalent of the NO_X allowances available for compliance deduction for the unit under § 97.54(a), (b), (e), and (f) in a control period adjusted by deductions of such NO_X allowances to account for actual heat input under § 97.42(e) for the control period or to account for excess emissions for a prior control period under § 97.54(d) or to account for withdrawal from the NO_X Budget Trading Program, or for a change in regulatory status, of a NO_X Budget opt-in unit under § 97.86 or § 97.87.

NO_X Budget opt-in permit means a NO_X Budget permit covering a NO_X Budget opt-in unit.

NO_X Budget opt-in unit means a unit that has been elected to become a NO_X Budget unit under the NO_X Budget Trading Program and whose NO_X Budget opt-in permit has been issued and is in effect under subpart I of this part.

NO_X Budget permit means the legally binding and federally enforceable written document, or portion of such document, issued by the permitting authority under this part, including any permit revisions, specifying the NO_X Budget Trading Program requirements applicable to a NO_X Budget source, to each NO_X Budget unit at the NO_X Budget source, and to the owners and operators and the NO_X authorized account representative of the NO_X Budget source and each NO_X Budget unit.

NO_X Budget source means a source that includes one or more NO_X Budget units.

NO_X Budget Trading Program means a multistate nitrogen oxides air pollution control and emission reduction program established by the Administrator in accordance with this part and pursuant to § 52.34 of this chapter, as a means of mitigating the interstate transport of ozone and nitrogen oxides, an ozone precursor.

NO_X Budget unit means a unit that is subject to the NO_X Budget Trading Program emissions limitation under § 97.4(a) or § 97.80.

Operating means, with regard to a unit under §§ 97.22(d)(2) and 97.80, having documented heat input for more than 876 hours in the 6 months immediately preceding the submission of an application for an initial NO_X Budget permit under § 97.83(a). The unit's documented heat input will be determined in accordance with part 75 of this chapter if the unit was otherwise subject to the requirements of part 75 of this chapter during that 6-month period or

will be based on the best available data reported to the Administrator for the unit if the unit was not otherwise subject to the requirements of part 75 of this chapter during that 6-month period.

Operator means any person who operates, controls, or supervises a NO_X Budget unit, a NO_X Budget source, or a unit for which an application for a NO_X Budget opt-in permit under §97.83 is submitted and not denied or withdrawn and shall include, but not be limited to, any holding company, utility system, or plant manager of such a unit or source.

Opt-in means to be elected to become a NO_X Budget unit under the NO_X Budget Trading Program through a final, effective NO_X Budget opt-in permit under subpart I of this part.

Overdraft account means the NO_X Allowance Tracking System account, established by the Administrator under subpart F of this part, for each NO_X Budget source where there are two or more NO_X Budget units.

Owner means any of the following persons:

(1) Any holder of any portion of the legal or equitable title in a NO_X Budget unit or in a unit for which an application for a NO_X Budget opt-in permit under §97.83 is submitted and not denied or withdrawn; or

(2) Any holder of a leasehold interest in a NO_X Budget unit or in a unit for which an application for a NO_X Budget opt-in permit under §97.83 is submitted and not denied or withdrawn; or

(3) Any purchaser of power from a NO_X Budget unit or from a unit for which an application for a NO_X Budget opt-in permit under §97.83 is submitted and not denied or withdrawn under a life-of-the-unit, firm power contractual arrangement. However, unless expressly provided for in a leasehold agreement, owner shall not include a passive lessor, or a person who has an equitable interest through such lessor, whose rental payments are not based, either directly or indirectly, upon the revenues or income from the NO_X Budget unit or the unit for which an application for a NO_X Budget opt-in permit under §97.83 is submitted and not denied or withdrawn; or

(4) With respect to any general account, any person who has an ownership interest with respect to the NO_X allowances held in the general account and who is subject to the binding agreement for the NO_X authorized account representative to represent that person's ownership interest with respect to NO_X allowances.

Percent monitor data availability means, for purposes of §97.43 (a)(1) and §94.84(b), total unit operating hours for which quality-assured data were recorded under subpart H of this part in a control period, divided by 3,672 hours per control period, and multiplied by 100%.

Permitting authority means the State air pollution control agency, local agency, other State agency, or other agency authorized by the Administrator to issue or revise permits to meet the requirements of the NO_X Budget Trading Program in accordance with subpart C of this part.

Potential electrical output capacity means 33 percent of a unit's maximum design heat input.

Receive or receipt of means, when referring to the permitting authority or the Administrator, to come into possession of a document, information, or correspondence (whether sent in writing or by authorized electronic transmission), as indicated in an official correspondence log, or by a notation made on the document, information, or correspondence, by the permitting authority or the Administrator in the regular course of business.

Recordation, record, or recorded means, with regard to NO_X allowances, the movement of NO_X allowances by the Administrator from one NO_X Allowance Tracking System account to another, for purposes of allocation, transfer, or deduction.

Reference method means any direct test method of sampling and analyzing for an air pollutant as specified in appendix A of part 60 of this chapter.

Serial number means, when referring to NO_X allowances, the unique identification number assigned to each NO_X allowance by the Administrator, under §97.53(c).

Source means any governmental, institutional, commercial, or industrial structure, installation, plant, building,

or facility that emits or has the potential to emit any regulated air pollutant under the Clean Air Act. For purposes of section 502(c) of the Clean Air Act, a ''source,'' including a ''source'' with multiple units, shall be considered a single ''facility.''

State means one of the 48 contiguous States or a portion thereof or the District of Columbia that is specified in § 52.34 of this chapter and in which are located units for which the Administrator makes an effective finding under § 52.34 of this chapter.

Submit or *serve* means to send or transmit a document, information, or correspondence to the person specified in accordance with the applicable regulation:

(1) In person;

(2) By United States Postal Service; or

(3) By other means of dispatch or transmission and delivery. Compliance with any ''submission,'' ''service,'' or ''mailing'' deadline shall be determined by the date of dispatch, transmission, or mailing and not the date of receipt.

Title V operating permit means a permit issued under title V of the Clean Air Act and part 70 or part 71 of this chapter.

Title V operating permit regulations means the regulations that the Administrator has approved or issued as meeting the requirements of title V of the Clean Air Act and part 70 or 71 of this chapter.

Ton or *tonnage* means any ''short ton'' (i.e., 2,000 pounds). For the purpose of determining compliance with the NO_X Budget emissions limitation, total tons for a control period shall be calculated as the sum of all recorded hourly emissions (or the tonnage equivalent of the recorded hourly emissions rates) in accordance with subpart H of this part, with any remaining fraction of a ton equal to or greater than 0.50 ton deemed to equal one ton and any fraction of a ton less than 0.50 ton deemed to equal zero tons.

Unit means a fossil fuel-fired stationary boiler, combustion turbine, or combined cycle system.

Unit operating day means a calendar day in which a unit combusts any fuel.

Unit operating hour or *hour of unit operation* means any hour (or fraction of an hour) during which a unit combusts any fuel.

§ 97.3 Measurements, abbreviations, and acronyms.

Measurements, abbreviations, and acronyms used in this part are defined as follows:

Btu-British thermal unit.
CO_2-carbon dioxide.
hr-hour.
kW-kilowatt electrical.
kWh-kilowatt hour.
lb-pounds.
mmBtu-million Btu.
MWe-megawatt electrical.
NO_X-nitrogen oxides.
O_2-oxygen.
ton-2000 pounds.

§ 97.4 Applicability.

(a) The following units in a State (as defined in § 97.2) shall be NO_X Budget units, and any source that includes one or more such units shall be a NO_X Budget source, subject to the requirements of this part:

(1)(i) For units that commenced operation before January 1, 1997, a unit serving during 1995 or 1996 a generator that had a nameplate capacity greater than 25 MWe and produced electricity for sale under a firm contract to the electric grid.

(ii) For units that commenced operation on or after January 1, 1997 and before January 1, 1999, a unit serving during 1997 or 1998 a generator that had a nameplate capacity greater than 25 MWe and produced electricity for sale under a firm contract to the electric grid.

(iii) For units that commence operation on or after January 1, 1999, a unit serving at any time a generator that has a nameplate capacity greater than 25 MWe and produces electricity for sale.

(2)(i) For units that commenced operation before January 1, 1997, a unit that has a maximum design heat input greater than 250 mmBtu/hr and that did not serve during 1995 or 1996 a generator producing electricity for sale under a firm contract to the electric grid.

(ii) For units that commenced operation on or after January 1, 1997 and before January 1, 1999, a unit that has a maximum design heat input greater

than 250 mmBtu/hr and that did not serve during 1997 or 1998 a generator producing electricity for sale under a firm contract to the electric grid.

(iii) For units that commence operation on or after January 1, 1999, a unit with a maximum design heat input greater than 250 mmBtu/hr that:

(A) At no time serves a generator producing electricity for sale; or

(B) At any time serves a generator producing electricity for sale, if any such generator has a nameplate capacity of 25 MWe or less and has the potential to use no more than 50 percent of the potential electrical output capacity of the unit.

(b)(1) Notwithstanding paragraph (a) of this section, a unit under paragraph (a)(1) or (a)(2) of this section that has a federally enforceable permit that includes a NO_X emission limitation restricting NO_X emissions during a control period to 25 tons or less and that includes the special provisions in paragraph (b)(4) of this section shall be exempt from the requirements of the NO_X Budget Trading Program, except for the provisions of this paragraph (b), §97.2, §97.3, §97.4(a), §97.7, and subparts E, F, and G of this part. The NO_X emission limitation under this paragraph (b)(1) shall restrict NO_X emissions during the control period by limiting unit operating hours. The restriction on unit operating hours shall be calculated by dividing 25 tons by the unit's maximum potential hourly NO_X mass emissions, which shall equal the unit's maximum rated hourly heat input multiplied by the highest default NO_X emission rate otherwise applicable to the unit under §75.19 of this chapter.

(2) The exemption under paragraph (b)(1) of this section shall become effective as follows:

(i) The exemption shall become effective on the date on which the NO_X emission limitation and the special provisions in the permit under paragraph (b)(1) of this section become final; or

(ii) If the NO_X emission limitation and the special provisions in the permit under paragraph (b)(1) of this section become final during a control period and after the first date on which the unit operates during such control period, then the exemption shall become effective on May 1 of such control period, provided that such NO_X emission limitation and the special provisions apply to the unit as of such first date of operation. If such NO_X emission limitation and special provisions do not apply to the unit as of such first date of operation, then the exemption under paragraph (b)(1) of this section shall become effective on October 1 of the year during which such NO_X emission limitation and the special provisions become final.

(3) The permitting authority that issues a federally enforceable permit under paragraph (b)(1) of this section for a unit under paragraph (a)(1) or (a)(2) of this section will provide the Administrator written notice of the issuance of such permit and, upon request, a copy of the permit.

(4) *Special provisions.* (i) A unit exempt under paragraph (b)(1) of this section shall comply with the restriction on unit operating hours described in paragraph (b)(1) of this section during the control period in each year.

(ii) The Administrator will allocate NO_X allowances to the unit under §§97.41(a) through (c) and 97.42(a) through (c). For each control period for which the unit is allocated NO_X allowances under §§97.41(a) through (c) and 97.42(a) through (c):

(A) The owners and operators of the unit must specify a general account, in which the Administrator will record the NO_X allowances; and

(B) After the Administrator records a NO_X allowance allocations under §§97.41(a) through (c) and 97.42(a) through (c), the Administrator will deduct, from the general account under paragraph (b)(4)(ii)(A) of this section, NO_X allowances that are allocated for the same or a prior control period as the NO_X allowances allocated to the unit under §§97.41(a) through (c) and 97.42(a) through (c) and that equal the NO_X emission limitation (in tons of NO_X) on which the unit's exemption under paragraph (b)(1) of this section is based. The NO_X authorized account representative shall ensure that such general account contains the NO_X allowances necessary for completion of such deduction.

(iii) A unit exempt under this paragraph (b) shall report hours of unit operation during the control period in each year to the permitting authority by November 1 of that year.

(iv) For a period of 5 years from the date the records are created, the owners and operators of a unit exempt under paragraph (b)(1) of this section shall retain, at the source that includes the unit, records demonstrating that the conditions of the federally enforceable permit under paragraph (b)(1) of this section were met, including the restriction on unit operating hours. The 5-year period for keeping records may be extended for cause, at any time prior to the end of the period, in writing by the permitting authority or the Administrator. The owners and operators bear the burden of proof that the unit met the restriction on unit operating hours.

(v) The owners and operators and, to the extent applicable, the NO_X authorized account representative of a unit exempt under paragraph (b)(1) of this section shall comply with the requirements of the NO_X Budget Trading Program concerning all periods for which the exemption is not in effect, even if such requirements arise, or must be complied with, after the exemption takes effect.

(vi) On the earlier of the following dates, a unit exempt under paragraph (b)(1) of this section shall lose its exemption:

(A) The date on which the restriction on unit operating hours described in paragraph (b)(1) of this section is removed from the unit's federally enforceable permit or otherwise becomes no longer applicable to any control period starting in 2004; or

(B) The first date on which the unit fails to comply, or with regard to which the owners and operators fail to meet their burden of proving that the unit is complying, with the restriction on unit operating hours described in paragraph (b)(1) of this section during any control period starting in 2004.

(vii) A unit that loses its exemption in accordance with paragraph (b)(4)(vi) of this section shall be subject to the requirements of this part. For the purpose of applying permitting requirements under subpart C of this part, allocating allowances under subpart E of this part, and applying monitoring requirements under subpart H of this part, the unit shall be treated as commencing operation and, if the unit is covered by paragraph (a)(1) of this section, commencing commercial operation on the date the unit loses its exemption.

(viii) A unit that is exempt under paragraph (b)(1) of this section is not eligible to be a NO_X Budget opt-in unit under subpart I of this part.

[65 FR 2727, Jan. 18, 2000, as amended at 67 FR 21529, Apr. 30, 2002]

§ 97.5 Retired unit exemption.

(a) This section applies to any NO_X Budget unit, other than a NO_X Budget opt-in unit, that is permanently retired.

(b)(1) Any NO_X Budget unit, other than a NO_X Budget opt-in unit, that is permanently retired shall be exempt from the NO_X Budget Trading Program, except for the provisions of this section, § 97.2, § 97.3, § 97.4, § 97.7, and subparts E, F, and G of this part.

(2) The exemption under paragraph (b)(1) of this section shall become effective the day on which the unit is permanently retired. Within 30 days of permanent retirement, the NO_X authorized account representative (authorized in accordance with subpart B of this part) shall submit a statement to the permitting authority otherwise responsible for administering any NO_X Budget permit for the unit. The NO_X authorized account representative shall submit a copy of the statement to the Administrator. The statement shall state, in a format prescribed by the permitting authority, that the unit is permanently retired and will comply with the requirements of paragraph (c) of this section.

(3) After receipt of the notice under paragraph (b)(2) of this section, the permitting authority will amend any permit covering the source at which the unit is located to add the provisions and requirements of the exemption under paragraphs (b)(1) and (c) of this section.

(c) *Special provisions.* (1) A unit exempt under this section shall not emit any nitrogen oxides, starting on the date that the exemption takes effect.

(2) The Administrator will allocate NO_X allowances under subpart E of this part to a unit exempt under this section. For each control period for which the unit is allocated one or more NO_X allowances, the owners and operators of the unit shall specify a general account, in which the Administrator will record such NO_X allowances.

(3) For a period of 5 years from the date the records are created, the owners and operators of a unit exempt under this section shall retain at the source that includes the unit, records demonstrating that the unit is permanently retired. The 5-year period for keeping records may be extended for cause, at any time prior to the end of the period, in writing by the permitting authority or the Administrator. The owners and operators bear the burden of proof that the unit is permanently retired.

(4) The owners and operators and, to the extent applicable, the NO_X authorized account representative of a unit exempt under this section shall comply with the requirements of the NO_X Budget Trading Program concerning all periods for which the exemption is not in effect, even if such requirements arise, or must be complied with, after the exemption takes effect.

(5)(i) A unit exempt under this section and located at a source that is required, or but for this exemption would be required, to have a title V operating permit shall not resume operation unless the NO_X authorized account representative of the source submits a complete NO_X Budget permit application under §97.22 for the unit not less than 18 months (or such lesser time provided by the permitting authority) before the later of May 31, 2004 or the date on which the unit resumes operation.

(ii) A unit exempt under this section and located at a source that is required, or but for this exemption would be required, to have a non-title V permit shall not resume operation unless the NO_X authorized account representative of the source submits a complete NO_X Budget permit application under §97.22 for the unit not less than 18 months (or such lesser time provided by the permitting authority) before the later of May 31, 2004 or the date on which the unit is to first resume operation.

(6) On the earlier of the following dates, a unit exempt under paragraph (b) of this section shall lose its exemption:

(i) The date on which the NO_X authorized account representative submits a NO_X Budget permit application under paragraph (c)(5) of this section; or

(ii) The date on which the NO_X authorized account representative is required under paragraph (c)(5) of this section to submit a NO_X Budget permit application.

(7) For the purpose of applying monitoring requirements under subpart H of this part, a unit that loses its exemption under this section shall be treated as a unit that commences operation or commercial operation on the first date on which the unit resumes operation.

(8) A unit that is exempt under this section is not eligible to be a NO_X Budget opt-in unit under subpart I of this part.

[65 FR 2727, Jan. 18, 2000, as amended at 67 FR 21529, Apr. 30, 2002]

§97.6 Standard requirements.

(a) *Permit requirements.* (1) The NO_X authorized account representative of each NO_X Budget source required to have a federally enforceable permit and each NO_X Budget unit required to have a federally enforceable permit at the source shall:

(i) Submit to the permitting authority a complete NO_X Budget permit application under §97.22 in accordance with the deadlines specified in §97.21(b) and (c);

(ii) Submit in a timely manner any supplemental information that the permitting authority determines is necessary in order to review a NO_X Budget permit application and issue or deny a NO_X Budget permit.

(2) The owners and operators of each NO_X Budget source required to have a federally enforceable permit and each NO_X Budget unit required to have a federally enforceable permit at the source shall have a NO_X Budget permit issued by the permitting authority and operate the unit in compliance with such NO_X Budget permit.

(3) The owners and operators of a NO_X Budget source that is not otherwise required to have a federally enforceable permit are not required to submit a NO_X Budget permit application, and to have a NO_X Budget permit, under subpart C of this part for such NO_X Budget source.

(b) *Monitoring requirements.* (1) The owners and operators and, to the extent applicable, the NO_X authorized account representative of each NO_X Budget source and each NO_X Budget unit at the source shall comply with the monitoring requirements of subpart H of this part.

(2) The emissions measurements recorded and reported in accordance with subpart H of this part shall be used to determine compliance by the unit with the NO_X Budget emissions limitation under paragraph (c) of this section.

(c) *Nitrogen oxides requirements.* (1) The owners and operators of each NO_X Budget source and each NO_X Budget unit at the source shall hold NO_X allowances available for compliance deductions under § 97.54(a), (b), (e), or (f) as of the NO_X allowance transfer deadline, in the unit's compliance account and the source's overdraft account in an amount not less than the total NO_X emissions for the control period from the unit, as determined in accordance with subpart H of this part, plus any amount necessary to account for actual heat input under § 97.42(e) for the control period or to account for excess emissions for a prior control period under § 97.54(d) or to account for withdrawal from the NO_X Budget Trading Program, or a change in regulatory status, of a NO_X Budget opt-in unit under § 97.86 or § 97.87.

(2) Each ton of nitrogen oxides emitted in excess of the NO_X Budget emissions limitation shall constitute a separate violation of this part, the Clean Air Act, and applicable State law.

(3) A NO_X Budget unit shall be subject to the requirements under paragraph (c)(1) of this section starting on the later of May 31, 2004 or the date on which the unit commences operation.

(4) NO_X allowances shall be held in, deducted from, or transferred among NO_X Allowance Tracking System accounts in accordance with subparts E, F, G, and I of this part.

(5) A NO_X allowance shall not be deducted, in order to comply with the requirements under paragraph (c)(1) of this section, for a control period in a year prior to the year for which the NO_X allowance was allocated.

(6) A NO_X allowance allocated by the Administrator under the NO_X Budget Trading Program is a limited authorization to emit one ton of nitrogen oxides in accordance with the NO_X Budget Trading Program. No provision of the NO_X Budget Trading Program, the NO_X Budget permit application, the NO_X Budget permit, or an exemption under § 97.4(b) or § 97.5 and no provision of law shall be construed to limit the authority of the United States to terminate or limit such authorization.

(7) A NO_X allowance allocated by the Administrator under the NO_X Budget Trading Program does not constitute a property right.

(8) Upon recordation by the Administrator under subpart F or G of this part, every allocation, transfer, or deduction of a NO_X allowance to or from a NO_X Budget unit's compliance account or the overdraft account of the source where the unit is located is incorporated automatically in any NO_X Budget permit of the NO_X Budget unit.

(d) *Excess emissions requirements.* (1) The owners and operators of a NO_X Budget unit that has excess emissions in any control period shall:

(i) Surrender the NO_X allowances required for deduction under § 97.54(d)(1); and

(ii) Pay any fine, penalty, or assessment or comply with any other remedy imposed under § 97.54(d)(3).

(e) *Recordkeeping and reporting requirements.* (1) Unless otherwise provided, the owners and operators of the NO_X Budget source and each NO_X Budget unit at the source shall keep on site at the source each of the following documents for a period of 5 years from the date the document is created. This period may be extended for cause, at any time prior to the end of 5 years, in writing by the permitting authority or the Administrator.

(i) The account certificate of representation under § 97.13 for the NO_X authorized account representative for the source and each NO_X Budget unit at the source and all documents that

demonstrate the truth of the statements in the account certificate of representation; provided that the certificate and documents shall be retained on site at the source beyond such 5-year period until such documents are superseded because of the submission of a new account certificate of representation under §97.13 changing the NO_X authorized account representative.

(ii) All emissions monitoring information, in accordance with subpart H of this part; provided that to the extent that subpart H of this part provides for a 3-year period for recordkeeping, the 3-year period shall apply.

(iii) Copies of all reports, compliance certifications, and other submissions and all records made or required under the NO_X Budget Trading Program.

(iv) Copies of all documents used to complete a NO_X Budget permit application and any other submission under the NO_X Budget Trading Program or to demonstrate compliance with the requirements of the NO_X Budget Trading Program.

(2) The NO_X authorized account representative of a NO_X Budget source and each NO_X Budget unit at the source shall submit the reports and compliance certifications required under the NO_X Budget Trading Program, including those under subpart D, H, or I of this part.

(f) *Liability*. (1) Any person who knowingly violates any requirement or prohibition of the NO_X Budget Trading Program, a NO_X Budget permit, or an exemption under §97.4(b) or §97.5 shall be subject to enforcement pursuant to applicable State or Federal law.

(2) Any person who knowingly makes a false material statement in any record, submission, or report under the NO_X Budget Trading Program shall be subject to criminal enforcement pursuant to the applicable State or Federal law.

(3) No permit revision shall excuse any violation of the requirements of the NO_X Budget Trading Program that occurs prior to the date that the revision takes effect.

(4) Each NO_X Budget source and each NO_X Budget unit shall meet the requirements of the NO_X Budget Trading Program.

(5) Any provision of the NO_X Budget Trading Program that applies to a NO_X Budget source or the NO_X authorized account representative of a NO_X Budget source shall also apply to the owners and operators of such source and of the NO_X Budget units at the source.

(6) Any provision of the NO_X Budget Trading Program that applies to a NO_X Budget unit or the NO_X authorized account representative of a NO_X budget unit shall also apply to the owners and operators of such unit. Except with regard to the requirements applicable to units with a common stack under subpart H of this part, the owners and operators and the NO_X authorized account representative of one NO_X Budget unit shall not be liable for any violation by any other NO_X Budget unit of which they are not owners or operators or the NO_X authorized account representative and that is located at a source of which they are not owners or operators or the NO_X authorized account representative.

(g) *Effect on other authorities*. No provision of the NO_X Budget Trading Program, a NO_X Budget permit application, a NO_X Budget permit, or an exemption under §97.4(b) or §97.5 shall be construed as exempting or excluding the owners and operators and, to the extent applicable, the NO_X authorized account representative of a NO_X Budget source or NO_X Budget unit from compliance with any other provision of the applicable, approved State implementation plan, a federally enforceable permit, or the Clean Air Act.

[65 FR 2727, Jan. 18, 2000, as amended at 67 FR 21529, Apr. 30, 2002]

§97.7 Computation of time.

(a) Unless otherwise stated, any time period scheduled, under the NO_X Budget Trading Program, to begin on the occurrence of an act or event shall begin on the day the act or event occurs.

(b) Unless otherwise stated, any time period scheduled, under the NO_X Budget Trading Program, to begin before the occurrence of an act or event shall be computed so that the period ends the day before the act or event occurs.

(c) Unless otherwise stated, if the final day of any time period, under the NO_X Budget Trading Program, falls on

a weekend or a State or Federal holiday, the time period shall be extended to the next business day.

Subpart B—NO_X Authorized Account Representative for NO_X Budget Sources

§ 97.10 Authorization and responsibilities of NO_X authorized account representative.

(a) Except as provided under § 97.11, each NO_X Budget source, including all NO_X Budget units at the source, shall have one and only one NO_X authorized account representative, with regard to all matters under the NO_X Budget Trading Program concerning the source or any NO_X Budget unit at the source.

(b) The NO_X authorized account representative of the NO_X Budget source shall be selected by an agreement binding on the owners and operators of the source and all NO_X Budget units at the source.

(c) Upon receipt by the Administrator of a complete account certificate of representation under § 97.13, the NO_X authorized account representative of the source shall represent and, by his or her representations, actions, inactions, or submissions, legally bind each owner and operator of the NO_X Budget source represented and each NO_X Budget unit at the source in all matters pertaining to the NO_X Budget Trading Program, not withstanding any agreement between the NO_X authorized account representative and such owners and operators. The owners and operators shall be bound by any decision or order issued to the NO_X authorized account representative by the permitting authority, the Administrator, or a court regarding the source or unit.

(d) No NO_X Budget permit shall be issued, and no NO_X Allowance Tracking System account shall be established for a NO_X Budget unit at a source, until the Administrator has received a complete account certificate of representation under § 97.13 for a NO_X authorized account representative of the source and the NO_X Budget units at the source.

(e) (1) Each submission under the NO_X Budget Trading Program shall be submitted, signed, and certified by the NO_X authorized account representative for each NO_X Budget source on behalf of which the submission is made. Each such submission shall include the following certification statement by the NO_X authorized account representative: ''I am authorized to make this submission on behalf of the owners and operators of the NO_X Budget sources or NO_X Budget units for which the submission is made. I certify under penalty of law that I have personally examined, and am familiar with, the statements and information submitted in this document and all its attachments. Based on my inquiry of those individuals with primary responsibility for obtaining the information, I certify that the statements and information are to the best of my knowledge and belief true, accurate, and complete. I am aware that there are significant penalties for submitting false statements and information or omitting required statements and information, including the possibility of fine or imprisonment.''

(2) The permitting authority and the Administrator will accept or act on a submission made on behalf of owner or operators of a NO_X Budget source or a NO_X Budget unit only if the submission has been made, signed, and certified in accordance with paragraph (e)(1) of this section.

§ 97.11 Alternate NO_X authorized account representative.

(a) An account certificate of representation may designate one and only one alternate NO_X authorized account representative who may act on behalf of the NO_X authorized account representative. The agreement by which the alternate NO_X authorized account representative is selected shall include a procedure for authorizing the alternate NO_X authorized account representative to act in lieuof the NO_X authorized account representative.

(b) Upon receipt by the Administrator of a complete account certificate of representation under § 97.13, any representation, action, inaction, or submission by the alternate NO_X authorized account representative shall be deemed to be a representation, action, inaction, or submission by the NO_X authorized account representative.

(c) Except in this section and §§97.10(a), 97.12, 97.13, and 97.51, whenever the term ''NO_X authorized account representative'' is used in this part, the term shall be construed to include the alternate NO_X authorized account representative.

§97.12 Changing NO_X authorized account representative and alternate NO_X authorized account representative; changes in owners and operators.

(a) *Changing NO_X authorized account representative.* The NO_X authorized account representative may be changed at any time upon receipt by the Administrator of a superseding complete account certificate of representation under §97.13. Notwithstanding any such change, all representations, actions, inactions, and submissions by the previous NO_X authorized account representative prior to the time and date when the Administrator receives the superseding account certificate of representation shall be binding on the new NO_X authorized account representative and the owners and operators of the NO_X Budget source and the NO_X Budget units at the source.

(b) *Changing alternate NO_X authorized account representative.* The alternate NO_X authorized account representative may be changed at any time upon receipt by the Administrator of a superseding complete account certificate of representation under §97.13. Notwithstanding any such change, all representations, actions, inactions, and submissions by the previous alternate NO_X authorized account representative prior to the time and date when the Administrator receives the superseding account certificate of representation shall be binding on the new alternate NO_X authorized account representative and the owners and operators of the NO_X Budget source and the NO_X Budget units at the source.

(c) *Changes in owners and operators.* (1) In the event a new owner or operator of a NO_X Budget source or a NO_X Budget unit is not included in the list of owners and operators submitted in the account certificate of representation under §97.13, such new owner or operator shall be deemed to be subject to and bound by the account certificate of representation, the representations, actions, inactions, and submissions of the NO_X authorized account representative and any alternate NO_X authorized account representative of the source or unit, and the decisions, orders, actions, and inactions of the permitting authority or the Administrator, as if the new owner or operator were included in such list.

(2) Within 30 days following any change in the owners and operators of a NO_X Budget source or a NO_X Budget unit, including the addition of a new owner or operator, the NO_X authorized account representative or alternate NO_X authorized account representative shall submit a revision to the account certificate of representation under §97.13 amending the list of owners and operators to include the change.

§97.13 Account certificate of representation.

(a) A complete account certificate of representation for a NO_X authorized account representative or an alternate NO_X authorized account representative shall include the following elements in a format prescribed by the Administrator:

(1) Identification of the NO_X Budget source and each NO_X Budget unit at the source for which the account certificate of representation is submitted.

(2) The name, address, e-mail address (if any), telephone number, and facsimile transmission number (if any) of the NO_X authorized account representative and any alternate NO_X authorized account representative.

(3) A list of the owners and operators of the NO_X Budget source and of each NO_X Budget unit at the source.

(4) The following certification statement by the NO_X authorized account representative and any alternate NO_X authorized account representative: ''I certify that I was selected as the NO_X authorized account representative or alternate NO_X authorized account representative, as applicable, by an agreement binding on the owners and operators of the NO_X Budget source and each NO_X Budget unit at the source. I certify that I have all the necessary authority to carry out my duties and responsibilities under the NO_X Budget Trading Program on behalf of the owners and operators of the NO_X Budget

source and of each NO_X Budget unit at the source and that each such owner and operator shall be fully bound by my representations, actions, inactions, or submissions and by any decision or order issued to me by the permitting authority, the Administrator, or a court regarding the source or unit.''

(5) The signature of the NO_X authorized account representative and any alternate NO_X authorized account representative and the dates signed.

(b) Unless otherwise required by the permitting authority or the Administrator, documents of agreement referred to in the account certificate of representation shall not be submitted to the permitting authority or the Administrator. Neither the permitting authority nor the Administrator shall be under any obligation to review or evaluate the sufficiency of such documents, if submitted.

§ 97.14 Objections concerning NO_X authorized account representative.

(a) Once a complete account certificate of representation under § 97.13 has been submitted and received, the permitting authority and the Administrator will rely on the account certificate of representation unless and until a superseding complete account certificate of representation under § 97.13 is received by the Administrator.

(b) Except as provided in § 97.12 (a) or (b), no objection or other communication submitted to the permitting authority or the Administrator concerning the authorization, or any representation, action, inaction, or submission of the NO_X authorized account representative shall affect any representation, action, inaction, or submission of the NO_X authorized account representative or the finality of any decision or order by the permitting authority or the Administrator under the NO_X Budget Trading Program.

(c) Neither the permitting authority nor the Administrator will adjudicate any private legal dispute concerning the authorization or any representation, action, inaction, or submission of any NO_X authorized account representative, including private legal disputes concerning the proceeds of NO_X allowance transfers.

Subpart C—Permits

§ 97.20 General NO_X Budget Trading Program permit requirements.

(a) For each NO_X Budget source required to have a federally enforceable permit, such permit shall include a NO_X Budget permit administered by the permitting authority for the federally enforceable permit.

(1) For NO_X Budget sources required to have a title V operating permit, the NO_X Budget portion of the title V permit shall be administered in accordance with the permitting authority's title V operating permits regulations promulgated under part 70 or 71 of this chapter, except as provided otherwise by this subpart or subpart I of this part.

(2) For NO_X Budget sources required to have a non-title V permit, the NO_X Budget portion of the non-title V permit shall be administered in accordance with the permitting authority's regulations promulgated to administer non-title V permits, except as provided otherwise by this subpart or subpart I of this part.

(b) Each NO_X Budget permit shall contain all applicable NO_X Budget Trading Program requirements and shall be a complete and segregable portion of the permit under paragraph (a) of this section.

§ 97.21 Submission of NO_X Budget permit applications.

(a) *Duty to apply*. The NO_X authorized account representative of any NO_X Budget source required to have a federally enforceable permit shall submit to the permitting authority a complete NO_X Budget permit application under § 97.22 by the applicable deadline in paragraph (b) of this section.

(b)(1) For NO_X Budget sources required to have a title V operating permit:

(i) For any source, with one or more NO_X Budget units under § 97.4(a) that commence operation before January 1, 2001, the NO_X authorized account representative shall submit a complete NO_X Budget permit application under § 97.22 covering such NO_X Budget units to the permitting authority at least 18 months (or such lesser time provided

by the permitting authority) before May 31, 2004.

(ii) For any source, with any NO_X Budget unit under §97.4(a) that commences operation on or after January 1, 2001, the NO_X authorized account representative shall submit a complete NO_X Budget permit application under §97.22 covering such NO_X Budget unit to the permitting authority at least 18 months (or such lesser time provided by the permitting authority) before the later of May 31, 2004 or the date on which the NO_X Budget unit commences operation.

(2) For NO_X Budget sources required to have a non-title V permit:

(i) For any source, with one or more NO_X Budget units under §97.4(a) that commence operation before January 1, 2001, the NO_X authorized account representative shall submit a complete NO_X Budget permit application under §97.22 covering such NO_X Budget units to the permitting authority at least 18 months (or such lesser time provided by the permitting authority) before May 31, 2004.

(ii) For any source, with any NO_X Budget unit under §97.4(a) that commences operation on or after January 1, 2001, the NO_X authorized account representative shall submit a complete NO_X Budget permit application under §97.22 covering such NO_X Budget unit to the permitting authority at least 18 months (or such lesser time provided by the permitting authority) before the later of May 31, 2004 or the date on which the NO_X Budget unit commences operation.

(c) *Duty to reapply*. (1) For a NO_X Budget source required to have a title V operating permit, the NO_X authorized account representative shall submit a complete NO_X Budget permit application under §97.22 for the NO_X Budget source covering the NO_X Budget units at the source in accordance with the permitting authority's title V operating permits regulations addressing operating permit renewal.

(2) For a NO_X Budget source required to have a non-title V permit, the NO_X authorized account representative shall submit a complete NO_X Budget permit application under §97.22 for the NO_X Budget source covering the NO_X Budget units at the source in accordance with the permitting authority's non-title V permits regulations addressing permit renewal.

[65 FR 2727, Jan. 18, 2000, as amended at 67 FR 21529, Apr. 30, 2002]

§97.22 Information requirements for NO_X Budget permit applications.

A complete NO_X Budget permit application shall include the following elements concerning the NO_X Budget source for which the application is submitted, in a format prescribed by the permitting authority:

(a) Identification of the NO_X Budget source, including plant name and the ORIS (Office of Regulatory Information Systems) or facility code assigned to the source by the Energy Information Administration, if applicable;

(b) Identification of each NO_X Budget unit at the NO_X Budget source and whether it is a NO_X Budget unit under §97.4(a) or under subpart I of this part;

(c) The standard requirements under §97.6; and

(d) For each NO_X Budget opt-in unit at the NO_X Budget source, the following certification statements by the NO_X authorized account representative:

(1) ''I certify that each unit for which this permit application is submitted under subpart I of this part is not a NO_X Budget unit under 40 CFR 97.4(a) and is not covered by an exemption under 40 CFR 97.4(b) or 97.5 that is in effect.''

(2) If the application is for an initial NO_X Budget opt-in permit, ''I certify that each unit for which this permit application is submitted under subpart I of 40 CFR part 97 is operating, as that term is defined under 40 CFR 97.2.''

§97.23 NO_X Budget permit contents.

(a) Each NO_X Budget permit will contain, in a format prescribed by the permitting authority, all elements required for a complete NO_X Budget permit application under §97.22.

(b) Each NO_X Budget permit is deemed to incorporate automatically the definitions of terms under §97.2 and, upon recordation by the Administrator under subpart F or G of this part, every allocation, transfer, or deduction of a NO_X allowance to or from the compliance accounts of the NO_X Budget units covered by the permit or

the overdraft account of the NO_X Budget source covered by the permit.

§ 97.24 NO_X Budget permit revisions.

(a) For a NO_X Budget source with a title V operating permit, except as provided in § 97.23(b), the permitting authority will revise the NO_X Budget permit, as necessary, in accordance with the permitting authority's title V operating permits regulations addressing permit revisions.

(b) For a NO_X Budget source with a non-title V permit, except as provided in § 97.23(b), the permitting authority will revise the NO_X Budget permit, as necessary, in accordance with the permitting authority's non-title V permits regulations addressing permit revisions.

Subpart D—Compliance Certification

§ 97.30 Compliance certification report.

(a) *Applicability and deadline.* For each control period in which one or more NO_X Budget units at a source are subject to the NO_X Budget emissions limitation, the NO_X authorized account representative of the source shall submit to the permitting authority and the Administrator by November 30 of that year, a compliance certification report for each source covering all such units.

(b) *Contents of report.* The NO_X authorized account representative shall include in the compliance certification report under paragraph (a) of this section the following elements, in a format prescribed by the Administrator, concerning each unit at the source and subject to the NO_X Budget emissions limitation for the control period covered by the report:

(1) Identification of each NO_X Budget unit;

(2) At the NO_X authorized account representative's option, the serial numbers of the NO_X allowances that are to be deducted from each unit's compliance account under § 97.54 for the control period;

(3) At the NO_X authorized account representative's option, for units sharing a common stack and having NO_X emissions that are not monitored separately or apportioned in accordance with subpart H of this part, the percentage of allowances that is to be deducted from each unit's compliance account under § 97.54(e); and

(4) The compliance certification under paragraph (c) of this section.

(c) *Compliance certification.* In the compliance certification report under paragraph (a) of this section, the NO_X authorized account representative shall certify, based on reasonable inquiry of those persons with primary responsibility for operating the source and the NO_X Budget units at the source in compliance with the NO_X Budget Trading Program, whether each NO_X Budget unit for which the compliance certification is submitted was operated during the calendar year covered by the report in compliance with the requirements of the NO_X Budget Trading Program applicable to the unit, including:

(1) Whether the unit was operated in compliance with the NO_X Budget emissions limitation;

(2) Whether the monitoring plan that governs the unit has been maintained to reflect the actual operation and monitoring of the unit and contains all information necessary to attribute NO_X emissions to the unit, in accordance with subpart H of this part;

(3) Whether all the NO_X emissions from the unit, or a group of units (including the unit) using a common stack, were monitored or accounted for through the missing data procedures and reported in the quarterly monitoring reports, including whether conditional data were reported in the quarterly reports in accordance with subpart H of this part. If conditional data were reported, the owner or operator shall indicate whether the status of all conditional data has been resolved and all necessary quarterly report resubmissions have been made;

(4) Whether the facts that form the basis for certification under subpart H of this part of each monitor at the unit or a group of units (including the unit) using a common stack, or for using an excepted monitoring method or alternative monitoring method approved under subpart H of this part, if any, have changed; and

(5) If a change is required to be reported under paragraph (c)(4) of this section, specify the nature of the change, the reason for the change, when the change occurred, and how the unit's compliance status was determined subsequent to the change, including what method was used to determine emissions when a change mandated the need for monitor recertification.

§ 97.31 Administrator's action on compliance certifications.

(a) The Administrator may review and conduct independent audits concerning any compliance certification or any other submission under the NO_X Budget Trading Program and make appropriate adjustments of the information in the compliance certifications or other submissions.

(b) The Administrator may deduct NO_X allowances from or transfer NO_X allowances to a unit's compliance account or a source's overdraft account based on the information in the compliance certifications or other submissions, as adjusted under paragraph (a) of this section.

Subpart E—NO_X Allowance Allocations

§ 97.40 Trading program budget.

In accordance with §§ 97.41 and 97.42, the Administrator will allocate to the NO_X Budget units under § 97.4(a) in a State, for each control period specified in § 97.41, a total number of NO_X allowances equal to the trading program budget for the State, as set forth in appendix C of this part, less the sum of the NO_X emission limitations (in tons) for each unit exempt under § 97.4(b) that is not allocated any NO_X allowances under § 97.42 (b) or (c) for the control period and whose NO_X emission limitation (in tons of NO_X) is not included in the amount calculated under § 97.42(d)(5)(ii)(B) for the control period.

§ 97.41 Timing requirements for NO_X allowance allocations.

(a) The NO_X allowance allocations, determined in accordance with §§ 97.42(a) through (c), for the control periods in 2004 through 2007 are set forth in appendices A and B of this part.

(b) By April 1, 2005, the Administrator will determine by order the NO_X allowance allocations, in accordance with §§ 97.42 (a) through (c), for the control periods in 2008 through 2012.

(c) By April 1, 2010, by April 1 of 2015, and thereafter by April 1 of the year that is 5 years after the last year for which NO_X allowances allocations are determined, the Administrator will determine by order the NO_X allowance allocations, in accordance with §§ 97.42(a) through (c), for the control periods in the years that are 3, 4, 5, 6, and 7 years after the applicable deadline under this paragraph (c).

(d) By April 1, 2004 and April 1 of each year thereafter, the Administrator will determine by order the NO_X allowance allocations, in accordance with § 97.42(d), for the control period in the year of the applicable deadline under this paragraph (d).

(e) The Administrator will make available to the public each determination of NO_X allowance allocations under paragraph (b), (c), or (d) of this section and will provide an opportunity for submission of objections to the determination. Objections shall be limited to addressing whether the determination is in accordance with § 97.42. Based on any such objections, the Administrator will adjust each determination to the extent necessary to ensure that it is in accordance with § 97.42.

[65 FR 2727, Jan. 18, 2000, as amended at 67 FR 21529, Apr. 30, 2002]

§ 97.42 NO_X allowance allocations.

(a)(1) The heat input (in mmBtu) used for calculating NO_X allowance allocations for each NO_X Budget unit under § 97.4(a) will be:

(i) For a NO_X allowance allocation under § 97.41(a):

(A) For a unit under § 97.4(a)(1), the average of the two highest amounts of the unit's heat input for the control periods in 1995 through 1998; or

(B) For a unit under § 97.4(a)(2), the control period in 1995 or, if the Administrator determines that reasonably reliable data are available for control periods in 1996 through 1998, the average of the two highest amounts of the

unit's heat input for the control periods in 1995 through 1998.

(ii) For a NO_X allowance allocation under § 97.41(b), the unit's average heat input for the control periods in 2002 through 2004.

(iii) For a NO_X allowance allocation under § 97.41(c), the unit's average heat input for the control period in the years that are 4, 5, 6, 7, and 8 years before the first year for which the allocation is being calculated.

(2) The unit's heat input for the control period in each year specified under paragraph (a)(1) of this section will be determined in accordance with part 75 of this chapter. Notwithstanding the first sentence of this paragraph (a)(2):

(i) For a NO_X allowance allocation under § 97.41(a), such heat input will be determined using the best available data reported to the Administrator for the unit if the unit was not otherwise subject to the requirements of part 75 of this chapter for the control period.

(ii) For a NO_X allowance allocation under § 97.41(b) or (c) for a unit exempt under § 97.4(b), such heat input shall be treated as zero if the unit is exempt under § 97.4(b) during the control period.

(b) For each group of control periods specified in § 97.41(a) through (c), the Administrator will allocate to all NO_X Budget units in a given State under § 97.4(a)(1) that commenced operation before May 1, 1997 for allocations under § 97.41(a), May 1, 2003 for allocations under § 97.41(b), and May 1 of the year 5 years before the first year for which the allocation under § 97.41(c) is being calculated, a total number of NO_X allowances equal to 95 percent of the portion of the State's trading program budget under § 97.40 covering such units. The Administrator will allocate in accordance with the following procedures:

(1) The Administrator will allocate NO_X allowances to each NO_X Budget unit under § 97.4(a)(1) for each control period in an amount equaling 0.15 lb/mmBtu multiplied by the heat input determined under paragraph (a) of this section, divided by 2,000 lb/ton, and rounded to the nearest whole number of NO_X allowances as appropriate.

(2) If the initial total number of NO_X allowances allocated to all NO_X Budget units under § 97.4(a)(1) in the State for a control period under paragraph (b)(1) of this section does not equal 95 percent of the portion of the State's trading program budget under § 97.40 covering such units, the Administrator will adjust the total number of NO_X allowances allocated to all such NO_X Budget units for the control period under paragraph (b)(1) of this section so that the total number of NO_X allowances allocated equals 95 percent of such portion of the State's trading program budget. This adjustment will be made by: multiplying each unit's allocation by 95 percent of such portion of the State's trading program budget; dividing by the total number of NO_X allowances allocated under paragraph (b)(1) of this section for the control period; and rounding to the nearest whole number of NO_X allowances as appropriate.

(c) For each group of control periods specified in § 97.41(a) through (c), the Administrator will allocate to all NO_X Budget units in a given State under § 97.4(a)(2) that commenced operation before May 1, 1997 for allocations under § 97.41(a), May 1, 2003 for allocations under § 97.41(b), and May 1 of the year 5 years before the first year for which the allocation under § 97.41(c) is being calculated, a total number of NO_X allowances equal to 95 percent of the portion of the State's trading program budget under § 97.40 covering such units. The Administrator will allocate in accordance with the following procedures:

(1) The Administrator will allocate NO_X allowances to each NO_X Budget unit under § 97.4(a)(2) for each control period in an amount equaling 0.17 lb/mmBtu multiplied by the heat input determined under paragraph (a) of this section, divided by 2,000 lb/ton, and rounded to the nearest whole number of NO_X allowances as appropriate.

(2) If the initial total number of NO_X allowances allocated to all NO_X Budget units under § 97.4(a)(2) in the State for a control period under paragraph (c)(1) of this section does not equal 95 percent of the portion of the State's trading program budget under § 97.40 covering such units, the Administrator will adjust the total number of NO_X allowances allocated to all such NO_X

Budget units for the control period under paragraph (a)(1) of this section so that the total number of NO_X allowances allocated equals 95 percent of the portion of the State's trading program budget under §97.40 covering such units. This adjustment will be made by: multiplying each unit's allocation by 95 percent of the portion of the State's trading program budget under §97.40 covering such units; dividing by the total number of NO_X allowances allocated under paragraph (c)(1) of this section for the control period; and rounding to the nearest whole number of NO_X allowances as appropriate.

(d) For each control period specified in §97.41(d), the Administrator will allocate NO_X allowances to NO_X Budget units in a given State under §97.4(a) (except for units exempt under §97.4(b)) that commence operation, or are projected to commence operation, on or after: May 1, 1997 (for control periods under §97.41(a)); May 1, 2003, (for control periods under §97.41(b)); and May 1 of the year 5 years before the beginning of the group of 5 years that includes the control period (for control periods under §97.41(c)). The Administrator will make the allocations under this paragraph (d) in accordance with the following procedures:

(1) The Administrator will establish one allocation set-aside for each control period. Each allocation set-aside will be allocated NO_X allowances equal to 5 percent of the tons of NO_X emission in the State's trading program budget under §97.40, rounded to the nearest whole number of NO_X allowances as appropriate.

(2) The NO_X authorized account representative of a NO_X Budget unit specified in this paragraph (d) may submit to the Administrator a request, in a format specified by the Administrator, to be allocated NO_X allowances for the control period. The NO_X allowance allocation request must be received by the Administrator on or after the date on which the State permitting authority issues a permit to construct the unit and by January 1 before the control period for which NO_X allowances are requested.

(3) In a NO_X allowance allocation request under paragraph (d)(2) of this section, the NO_X authorized account representative for a NO_X Budget unit under §97.4(a)(1) may request for the control period NO_X allowances in an amount that does not exceed the lesser of:

(i) 0.15 lb/mmBtu multiplied by the unit's maximum design heat input, multiplied by the lesser of 3,672 hours or the number of hours remaining in the control period starting with the day in the control period on which the unit commences operation or is projected to commence operation, divided by 2,000 lb/ton, and rounded to the nearest whole number of NO_X allowances as appropriate; or

(ii) The unit's most stringent State or Federal NO_X emission limitation multiplied by the unit's maximum design heat input, multiplied by the lesser of 3,672 hours or the number of hours remaining in the control period starting with the day in the control period on which the unit commences operation or is projected to commence operation, divided by 2,000 lb/ton, and rounded to the nearest whole number of NO_X allowances as appropriate.

(4) In a NO_X allowance allocation request under paragraph (d)(2) of this section, the NO_X authorized account representative for a NO_X Budget unit under §97.4(a)(2) may request for a control period NO_X allowances in an amount that does not exceed the lesser of:

(i) 0.17 lb/mmBtu multiplied by the unit's maximum design heat input, multiplied by the lesser of 3,672 hours or the number of hours remaining in the control period starting with the day in the control period on which the unit commences operation or is projected to commence operation, divided by 2,000 lb/ton, and rounded to the nearest whole number of NO_X allowances as appropriate; or

(ii) The unit's most stringent State or Federal NO_X emission limitation multiplied by the unit's maximum design heat input, multiplied by the lesser of 3,672 hours or the number of hours remaining in the control period starting with the day in the control period on which the unit commences operation or is projected to commence operation, divided by 2,000 lb/ton, and rounded to the nearest whole number of NO_X allowances as appropriate.

(5) The Administrator will review each NO_X allowance allocation request submitted in accordance with paragraph (d)(2) of this section and will allocate NO_X allowances pursuant to such request as follows:

(i) Upon receipt of the NO_X allowance allocation request, the Administrator will make any necessary adjustments to the request to ensure that the requirements of paragraphs (d) introductory text, (d)(2), (d)(3), and (d)(4) are met.

(ii) The Administrator will determine the following amounts:

(A) The sum of the NO_X allowances requested (as adjusted under paragraph (d)(5)(i) of this section) in all NO_X allowance allocation requests under paragraph (d)(2) of this section for the control period; and

(B) For units exempt under § 97.4(b) in the State that commenced operation, or are projected to commence operation, on or after May 1, 1997 (for control periods under § 97.41(a)); May 1, 2003, (for control periods under § 97.41(b)); and May 1 of the year 5 years before beginning of the group of 5 years that includes the control period (for control periods under § 97.41(c)), the sum of the NO_X emission limitations (in tons of NO_X) on which each unit's exemption under § 97.4(b) is based.

(iii) If the number of NO_X allowances in the allocation set-aside for the control period less the amount under paragraph (d)(5)(ii)(B) of this section is not less than the amount determined under paragraph (d)(5)(ii)(A) of this section, the Administrator will allocate the amount of the NO_X allowances requested (as adjusted under paragraph (d)(5)(i) of this section) to the NO_X Budget unit for which the allocation request was submitted.

(iv) If the number of NO_X allowances in the allocation set-aside for the control period less the amount under paragraph (d)(5)(ii)(B) of this section is less than the amount determined under paragraph (d)(5)(ii)(A) of this section, the Administrator will allocate, to the NO_X Budget unit for which the allocation request was submitted, the amount of NO_X allowances requested (as adjusted under paragraph (d)(5)(i) of this section) multiplied by the number of NO_X allowances in the allocation set-aside for the control period less the amount determined under paragraph (d)(5)(ii)(B) of this section, divided by the amount determined under paragraph (d)(5)(ii)(A) of this section, and rounded to the nearest whole number of NO_X allowances as appropriate.

(e)(1) For a NO_X Budget unit that is allocated NO_X allowances under paragraph (d) of this section for a control period, the Administrator will deduct NO_X allowances under § 97.54(b), (e), or (f) to account for the actual heat input of the unit during the control period. The Administrator will calculate the number of NO_X allowances to be deducted to account for the unit's actual heat input using the following formulas and rounding to the nearest whole number of NO_X allowance as appropriate, provided that the number of NO_X allowances to be deducted shall be zero if the number calculated is less than zero:

NO_X allowances deducted for actual heat input for a unit under § 97.4(a)(1) = Unit's NO_X allowances allocated for control period − (Unit's actual control period heat input×0.15 lb/mmBtu × 2,000 lb/ton); and NO_X allowances deducted for actual heat input for a unit under § 97.4(a)(2) = Unit's NO_X allowances allocated for control period − (Unit's actual control period heat input × 0.17 lb/mmBtu × 2,000 lb/ton)

Where:

''Unit's NO_X allowances allocated for control period'' is the number of NO_X allowances allocated to the unit for the control period under paragraph (d) of this section; and

''Unit's actual control period heat input'' is the heat input (in mmBtu) of the unit during the control period.

(2) The Administrator will transfer any NO_X allowances deducted under paragraph (c)(1) of this section to the allocation set-aside for the control period for which they were allocated.

(f) After making the deductions for compliance under § 97.54(b), (e), or (f) for a control period, the Administrator will determine whether any NO_X allowances remain in the allocation set-aside for the control period. The Administrator will allocate any such NO_X allowances to the NO_X Budget units in the State using the following formula

and rounding to the nearest whole number of NO_X allowances as appropriate:

Unit's share of NO_X allowances remaining in allocation set-aside = Total NO_X allowances remaining in allocation set-aside × (Unit's NO_X allowance allocation ÷ State's trading program budget excluding allocation set-aside)

Where:

''Total NO_X allowances remaining in allocation set-aside'' is the total number of NO_X allowances remaining in the allocation set-aside for the control period;

''Unit's NO_X allowance allocation'' is the number of NO_X allowances allocated under paragraph (b) or (c) of this section to the unit for the control period to which the allocation set-aside applies; and

''State's trading program budget excluding allocation set-aside'' is the State's trading program budget under §97.40 for the control period to which the allocation set-aside applies multiplied by 95 percent, rounded to the nearest whole number of NO_X allowances as appropriate.

(g) If the Administrator determines that NO_X allowances were allocated under paragraph (b), (c), or (d) of this section for a control period and the recipient of the allocation is not actually a NO_X Budget unit under §97.4(a), the Administrator will notify the NO_X authorized account representative and then will act in accordance with the following procedures:

(1)(i) The Administrator will not record such NO_X allowances for the control period in an account under §97.53;

(ii) If the Administrator already recorded such NO_X allowances for the control period in an account under §97.53 and if the Administrator makes such determination before making all deductions pursuant to §97.54 (except deductions pursuant to §97.54(d)(2)) for the control period, then the Administrator will deduct from the account NO_X allowances equal in number to and allocated for the same or a prior control period as the NO_X allowances allocated to such recipient for the control period. The NO_X authorized account representative shall ensure that the account contains the NO_X allowances necessary for completion of such deduction. If account does not contain the necessary NO_X allowances, the Administrator will deduct the required number of NO_X allowances, regardless of the control period for which they were allocated, whenever NO_X allowances are recorded in the account; or

(iii) If the Administrator already recorded such NO_X allowances for the control period in an account under §97.53 and if the Administrator makes such determination after making all deductions pursuant to §97.54 (except deductions pursuant to §97.54(d)(2)) for the control period, then the Administrator will apply paragraph (g)(1)(ii) of this section to any subsequent control period for which NO_X allowances were allocated to such recipient.

(2) The Administrator will transfer the NO_X allowances that are not recorded, or that are deducted, pursuant to paragraph (g)(1) of this section to an allocation set-aside for the State in which such source is located.

[65 FR 2727, Jan. 18, 2000, as amended at 67 FR 21529, Apr. 30, 2002]

§97.43 Compliance Supplement Pool.

(a) For any NO_X Budget unit that reduces its NO_X emission rate in the 2001 through 2003 control period, the owners and operators may request early reduction credits in accordance with the following requirements:

(1) Each NO_X Budget unit for which the owners and operators intend to request, or request, any early reduction credits in accordance with paragraph (a)(4) of this section shall monitor and report NO_X emissions in accordance with subpart H of this part starting in the 2000 control period and for each control period for which such early reduction credits are requested. The unit's percent monitor data availability shall not be less than 90 percent during the 2000 control period, and the unit must be in full compliance with any applicable State or Federal NO_X emission control requirements during 2000 through 2002.

(2) NO_X emission rate and heat input under paragraphs (a)(3) and (4) of this section shall be determined in accordance with subpart H of this part.

(3) Each NO_X Budget unit for which the owners and operators intend to request, or request, any early reduction credits under paragraph (a)(4) of this section shall reduce its NO_X emission

rate, for each control period for which early reduction credits are requested, to less than both 0.25 lb/mmBtu and 80 percent of the unit's NO_X emission rate in the 2000 control period.

(4) The NO_X authorized account representative of a NO_X Budget unit that meets the requirements of paragraphs (a) (1) and (3) of this section may submit to the Administrator a request for early reduction credits for the unit based on NO_X emission rate reductions made by the unit in the control period for 2001 through 2003.

(i) In the early reduction credit request, the NO_X authorized account may request early reduction credits for such control period in an amount equal to the unit's heat input for such control period multiplied by the difference between 0.25 lb/mmBtu and the unit's NO_X emission rate for such control period, divided by 2000 lb/ton, and rounded to the nearest whole number of tons.

(ii) The early reduction credit request must be submitted, in a format specified by the Administrator, by February 1, 2004.

(b) For any NO_X Budget unit that is subject to the Ozone Transport Commission NO_X Budget Program under title I of the Clean Air Act, the owners and operators may request early reduction credits in accordance with the following requirements:

(1) The NO_X authorized account representative of the unit may submit to the Administrator a request for early reduction credits in an amount equal to the amount of banked allowances under the Ozone Transport Commission NO_X Budget Program that were allocated for the control period in 2001 through 2003 and are held by the unit, in accordance with the Ozone Transport Commission NO_X Budget Program, as of the date of submission of the request. During the entire control period in 2001 through 2003 for which the allowances were allocated, the unit must have monitored and reported NO_X emissions in accordance with part 75 (except for subpart H) of this chapter and the Guidance for Implementation of Emission Monitoring Requirements for the NO_X Budget Program (January 28, 1997).

(2) The early reduction credit request under paragraph (b)(1) must be submitted, in a format specified by the Administrator, by February 1, 2004.

(3) The NO_X authorized account representative of the unit shall not submit a request for early reduction credits under paragraph (b)(1) of this section for banked allowances under the Ozone Transport Commission NO_X Budget Program that were allocated for any control period during which the unit made NO_X emission reductions for which he or she submits a request for early reduction credits under paragraph (a) of this section for the unit.

(c) The Administrator will review each early reduction credit request submitted in accordance with paragraph (a) or (b) of this section and will allocate NO_X allowances to NO_X Budget units in a given State and covered by such request as follows:

(1) Upon receipt of each early reduction credit request, the Administrator will make any necessary adjustments to the request to ensure that the amount of the early reduction credits requested meets the requirements of paragraph (a) or (b) of this section.

(2) After February 1, 2004, the Administrator will make available to the public a statement of the total number of early reduction credits requested by NO_X Budget units in the State.

(3) If the State's compliance supplement pool set forth in appendix D of this part has a number of NO_X allowances not less than the amount of early reduction credits in all early reduction credit requests under paragraph (a) or (b) of this section for 2001 through 2003 (as adjusted under paragraph (c)(1) of this section) submitted by February 1, 2004, the Administrator will allocate to each NO_X Budget unit covered by such requests one allowance for each early reduction credit requested (as adjusted under paragraph (c)(1) of this section).

(4) If the State's compliance supplement pool set forth in appendix D of this part has a smaller number of NO_X allowances than the amount of early reduction credits in all early reduction credit requests under paragraph (a) or (b) of this section for 2001 through 2003 (as adjusted under paragraph (c)(1) of this section) submitted by February 1, 2004, the Administrator will allocate NO_X allowances to each NO_X Budget

unit covered by such requests according to the following formula and rounding to the nearest whole number of NO_X allowances as appropriate:

Unit's allocation for early reduction credits = Unit's adjusted early reduction credits × (State's compliance supplement pool ÷ Total adjusted early reduction credits for all units)

Where:

''Unit's allocation for early reduction credits'' is the number of NO_X allowances allocated to the unit for early reduction credits.

''Unit's adjusted early reduction credits'' is the amount of early reduction credits requested for the unit for 2001 and 2002 in early reduction credit requests under paragraph (a) or (b) of this section, as adjusted under paragraph (c)(1) of this section.

''State's compliance supplement pool'' is the number of NO_X allowances in the State's compliance supplement pool set forth in appendix D of this part.

''Total adjusted early reduction credits for all units'' is the amount of early reduction credits requested for all units for 2001 and 2002 in early reduction credit requests under paragraph (a) or (b) of this section, as adjusted under paragraph (c)(1) of this section.

(5) By April 1, 2004, the Administrator will determine by order the allocations under paragraph (c)(3) or (4) of this section. The Administrator will make available to the public each determination of NO_X allowance allocations and will provide an opportunity for submission of objections to the determination. Objections shall be limited to addressing whether the determination is in accordance with paragraph (c)(1), (3), or (4) of this section. Based on any such objections, the Administrator will adjust each determination to the extent necessary to ensure that it is in accordance with paragraph (c)(1), (3), or (4) of this section.

(6) By May 1, 2004, the Administrator will record the allocations under paragraph (c)(3) or (4) of this section.

(7) NO_X allowances recorded under paragraph (c)(6) of this section may be deducted for compliance under §97.54 for the control period in 2004 or 2005. Notwithstanding §97.55(a), the Administrator will deduct as retired any NO_X allowance that is recorded under paragraph (c)(6) of this section and that is not deducted for compliance under §97.54 for the control period in 2003 or 2004.

(8) NO_X allowances recorded under paragraph (c)(6) of this section are treated as banked allowances in 2005 for the purposes of §§97.54(f) and 97.55(b).

[65 FR 2727, Jan. 18, 2000, as amended at 67 FR 21529, Apr. 30, 2002]

Subpart F—NO_X Allowance Tracking System

§97.50 NO_X Allowance Tracking System accounts.

(a) *Nature and function of compliance accounts and overdraft accounts.* Consistent with §97.51(a), the Administrator will establish one compliance account for each NO_X Budget unit and one overdraft account for each source with two or more NO_X Budget units. Allocations of NO_X allowances pursuant to subpart E of this part or §97.88, and deductions or transfers of NO_X allowances pursuant to §97.31, §96.54, §96.56, subpart G of this part, or subpart I of this part will be recorded in compliance accounts or overdraft accounts in accordance with this subpart.

(b) *Nature and function of general accounts.* Consistent with §97.51(b), the Administrator will establish, upon request, a general account for any person. Allocations of NO_X allowances pursuant to §97.4(b)(4)(ii) or §97.5(c)(2) and transfers of allowances pursuant to subpart G of this part will be recorded in general accounts in accordance with this subpart.

§97.51 Establishment of accounts.

(a) *Compliance accounts and overdraft accounts.* Upon receipt of a complete account certificate of representation under §97.13, the Administrator will establish:

(1) A compliance account for each NO_X Budget unit for which the account certificate of representation was submitted; and

(2) An overdraft account for each source for which the account certificate of representation was submitted and that has two or more NO_X Budget units.

(b) *General accounts.*—(1) *Application for general account.* (i) Any person may

apply to open a general account for the purpose of holding and transferring allowances. An application for a general account may designate one and only one NO_X authorized account representative and one and only one alternate NO_X authorized account representative who may act on behalf of the NO_X authorized account representative. The agreement by which the alternate NO_X authorized account representative is selected shall include a procedure for authorizing the alternate NO_X authorized account representative to act in lieu of the NO_X authorized account representative. A complete application for a general account shall be submitted to the Administrator and shall include the following elements in a format prescribed by the Administrator:

(A) Name, mailing address, e-mail address (if any), telephone number, and facsimile transmission number (if any) of the NO_X authorized account representative and any alternate NO_X authorized account representative;

(B) At the option of the NO_X authorized account representative, organization name and type of organization;

(C) A list of all persons subject to a binding agreement for the NO_X authorized account representative and any alternate NO_X authorized account representative to represent their ownership interest with respect to the allowances held in the general account;

(D) The following certification statement by the NO_X authorized account representative and any alternate NO_X authorized account representative: ''I certify that I was selected as the NO_X authorized account representative or the NO_X alternate authorized account representative, as applicable, by an agreement that is binding on all persons who have an ownership interest with respect to allowances held in the general account. I certify that I have all the necessary authority to carry out my duties and responsibilities under the NO_X Budget Trading Program on behalf of such persons and that each such person shall be fully bound by my representations, actions, inactions, or submissions and by any order or decision issued to me by the Administrator or a court regarding the general account.;''

(E) The signature of the NO_X authorized account representative and any alternate NO_X authorized account representative and the dates signed.

(ii) Unless otherwise required by the permitting authority or the Administrator, documents of agreement referred to in the application for a general account shall not be submitted to the permitting authority or the Administrator. Neither the permitting authority nor the Administrator shall be under any obligation to review or evaluate the sufficiency of such documents, if submitted.

(2) *Authorization of NO_X authorized account representative.* Upon receipt by the Administrator of a complete application for a general account under paragraph (b)(1) of this section:

(i) The Administrator will establish a general account for the person or persons for whom the application is submitted.

(ii) The NO_X authorized account representative and any alternate NO_X authorized account representative for the general account shall represent and, by his or her representations, actions, inactions, or submissions, legally bind each person who has an ownership interest with respect to NO_X allowances held in the general account in all matters pertaining to the NO_X Budget Trading Program, not withstanding any agreement between the NO_X authorized account representative or any alternate NO_X authorized account representative and such person. Any such person shall be bound by any order or decision issued to the NO_X authorized account representative or any alternate NO_X authorized account representative by the Administrator or a court regarding the general account.

(iii) Any representation, action, inaction, or submission by any alternate NO_X authorized account representative shall be deemed to be a representation, action, inaction, or submission by the NO_X authorized account representative.

(iv) Each submission concerning the general account shall be submitted, signed, and certified by the NO_X authorized account representative or any alternate NO_X authorized account representative for the persons having an ownership interest with respect to NO_X allowances held in the general account.

Each such submission shall include the following certification statement by the NO_X authorized account representative or any alternate NO_X authorizing account representative: ''I am authorized to make this submission on behalf of the persons having an ownership interest with respect to the NO_X allowances held in the general account. I certify under penalty of law that I have personally examined, and am familiar with, the statements and information submitted in this document and all its attachments. Based on my inquiry of those individuals with primary responsibility for obtaining the information, I certify that the statements and information are to the best of my knowledge and belief true, accurate, and complete. I am aware that there are significant penalties for submitting false statements and information or omitting required statements and information, including the possibility of fine or imprisonment.''

(v) The Administrator will accept or act on a submission concerning the general account only if the submission has been made, signed, and certified in accordance with paragraph (b)(2)(iv) of this section.

(3) *Changing NO_X authorized account representative and alternate NO_X authorized account representative; changes in persons with ownership interest.* (i) The NO_X authorized account representative for a general account may be changed at any time upon receipt by the Administrator of a superseding complete application for a general account under paragraph (b)(1) of this section. Notwithstanding any such change, all representations, actions, inactions, and submissions by the previous NO_X authorized account representative prior to the time and date when the Administrator receives the superseding application for a general account shall be binding on the new NO_X authorized account representative and the persons with an ownership interest with respect to the NO_X allowances in the general account.

(ii) The alternate NO_X authorized account representative for a general account may be changed at any time upon receipt by the Administrator of a superseding complete application for a general account under paragraph (b)(1) of this section. Notwithstanding any such change, all representations, actions, inactions, and submissions by the previous alternate NO_X authorized account representative prior to the time and date when the Administrator receives the superseding application for a general account shall be binding on the new alternate NO_X authorized account representative and the persons with an ownership interest with respect to the NO_X allowances in the general account.

(iii)(A) In the event a new person having an ownership interest with respect to NO_X allowances in the general account is not included in the list of such persons in the account certificate of representation, such new person shall be deemed to be subject to and bound by the account certificate of representation, the representation, actions, inactions, and submissions of the NO_X authorized account representative and any alternate NO_X authorized account representative of the source or unit, and the decisions, orders, actions, and inactions of the Administrator, as if the new person were included in such list.

(B) Within 30 days following any change in the persons having an ownership interest with respect to NO_X allowances in the general account, including the addition of persons, the NO_X authorized account representative or any alternate NO_X authorized account representative shall submit a revision to the application for a general account amending the list of persons having an ownership interest with respect to the NO_X allowances in the general account to include the change.

(4) *Objections concerning NO_X authorized account representative.* (i) Once a complete application for a general account under paragraph (b)(1) of this section has been submitted and received, the Administrator will rely on the application unless and until a superseding complete application for a general account under paragraph (b)(1) of this section is received by the Administrator.

(ii) Except as provided in paragraph (b)(3)(i) or (ii) of this section, no objection or other communication submitted to the Administrator concerning the authorization, or any representation, action, inaction, or submission of the NO_X authorized account representative or any alternative NO_X authorized account representative for a general account shall affect any representation, action, inaction, or submission of the NO_X authorized account representative or any alternative NO_X authorized account representative or the finality of any decision or order by the Administrator under the NO_X Budget Trading Program.

(iii) The Administrator will not adjudicate any private legal dispute concerning the authorization or any representation, action, inaction, or submission of the NO_X authorized account representative or any alternative NO_X authorized account representative for a general account, including private legal disputes concerning the proceeds of NO_X allowance transfers.

(c) *Account identification*. The Administrator will assign a unique identifying number to each account established under paragraph (a) or (b) of this section.

§ 97.52 NO_X Allowance Tracking System responsibilities of NO_X authorized account representative.

(a) Following the establishment of a NO_X Allowance Tracking System account, all submissions to the Administrator pertaining to the account, including, but not limited to, submissions concerning the deduction or transfer of NO_X allowances in the account, shall be made only by the NO_X authorized account representative for the account.

(b) *Authorized account representative identification*. The Administrator will assign a unique identifying number to each NO_X authorized account representative.

§ 97.53 Recordation of NO_X allowance allocations.

(a) The Administrator will record the NO_X allowances for 2004 for a NO_X Budget unit allocated under subpart E of this part in the unit's compliance account, except for NO_X allowances under § 97.4(b)(4)(ii) or § 97.5(c)(2), which will be recorded in the general account specified by the owners and operators of the unit. The Administrator will record NO_X allowances for 2004 for a NO_X Budget opt-in unit in the unit's compliance account as allocated under § 97.88(a).

(b) By May 1, 2003, the Administrator will record the NO_X allowances for 2005 for a NO_X Budget unit allocated under subpart E of this part in the unit's compliance account, except for NO_X allowances under § 97.4(b)(4)(ii) or § 97.5(c)(2), which will be recorded in the general account specified by the owners and operators of the unit. The Administrator will record NO_X allowances for 2005 for a NO_X Budget opt-in unit in the unit's compliance account as allocated under § 97.88(a).

(c) By May 1, 2003, the Administrator will record the NO_X allowances for 2006 for a NO_X Budget unit allocated under subpart E of this part in the unit's compliance account, except for NO_X allowances under § 97.4(b)(4)(ii) or § 97.5(c)(2), which will be recorded in the general account specified by the owners and operators of the unit. The Administrator will record NO_X allowances for 2006 for a NO_X Budget opt-in unit in the unit's compliance account as allocated under § 97.88(a).

(d) By May 1, 2004, the Administrator will record the NO_X allowances for 2007 for a NO_X Budget unit allocated under subpart E of this part in the unit's compliance account, except for NO_X allowances under § 97.4(b)(4)(ii) or § 97.5(c)(2), which will be recorded in the general account specified by the owners and operators of the unit. The Administrator will record NO_X allowances for 2007 for a NO_X Budget opt-in unit in the unit's compliance account as allocated under § 97.88(a).

(e) Each year starting with 2005, after the Administrator has made all deductions from a NO_X Budget unit's compliance account and the overdraft account pursuant to § 97.54 (except deductions pursuant to § 97.54(d)(2)), the Administrator will record:

(1) NO_X allowances, in the compliance account, as allocated to the unit under subpart E of this part for the third year after the year of the control

period for which such deductions were or could have been made;

(2) NO_X allowances, in the general account specified by the owners and operators of the unit, as allocated under §97.4(b)(4)(ii) or §97.5(c)(2) for the third year after the year of the control period for which such deductions are or could have been made; and

(3) NO_X allowances, in the compliance account, as allocated to the unit under §97.88(a).

(f) *Serial numbers for allocated NO_X allowances*. When allocating NO_X allowances to a NO_X Budget unit and recording them in an account, the Administrator will assign each NO_X allowance a unique identification number that will include digits identifying the year for which the NO_X allowance is allocated.

[65 FR 2727, Jan. 18, 2000, as amended at 67 FR 21530, Apr. 30, 2002]

§97.54 Compliance.

(a) NO_X allowance transfer deadline. The NO_X allowances are available to be deducted for compliance with a unit's NO_X Budget emissions limitation for a control period in a given year only if the NO_X allowances:

(1) Were allocated for a control period in a prior year or the same year; and

(2) Are held in the unit's compliance account, or the overdraft account of the source where the unit is located, as of the NO_X allowance transfer deadline for that control period or are transferred into the compliance account or overdraft account by a NO_X allowance transfer correctly submitted for recordation under §97.60 by the NO_X allowance transfer deadline for that control period.

(b) *Deductions for compliance*. (1) Following the recordation, in accordance with §97.61, of NO_X allowance transfers submitted for recordation in the unit's compliance account or the overdraft account of the source where the unit is located by the NO_X allowance transfer deadline for a control period, the Administrator will deduct NO_X allowances available under paragraph (a) of this section to cover the unit's NO_X emissions (as determined in accordance with subpart H of this part), or to account for actual heat input under §97.42(e), for the control period:

(i) From the compliance account; and

(ii) Only if no more NO_X allowances available under paragraph (a) of this section remain in the compliance account, from the overdraft account. In deducting allowances for units at the source from the overdraft account, the Administrator will begin with the unit having the compliance account with the lowest account number and end with the unit having the compliance account with the highest account number (with account numbers sorted beginning with the left-most character and ending with the right-most character and the letter characters assigned values in alphabetical order and less than all numeric characters).

(2) The Administrator will deduct NO_X allowances first under paragraph (b)(1)(i) of this section and then under paragraph (b)(1)(ii) of this section:

(i) Until the number of NO_X allowances deducted for the control period equals the number of tons of NO_X emissions, determined in accordance with subpart H of this part, from the unit for the control period for which compliance is being determined, plus the number of NO_X allowances required for deduction to account for actual heat input under §97.42(e) for the control period; or

(ii) Until no more NO_X allowances available under paragraph (a) of this section remain in the respective account.

(c)(1) *Identification of NO_X allowances by serial number*. The NO_X authorized account representative for each compliance account may identify by serial number the NO_X allowances to be deducted from the unit's compliance account under paragraph (b), (d), (e), or (f) of this section. Such identification shall be made in the compliance certification report submitted in accordance with §97.30.

(2) *First-in, first-out*. The Administrator will deduct NO_X allowances for a control period from the compliance account, in the absence of an identification or in the case of a partial identification of NO_X allowances by serial number under paragraph (c)(1) of this section, or the overdraft account on a first-in, first-out (FIFO) accounting basis in the following order:

(i) Those NO_X allowances that were allocated for the control period to the unit under subpart E or I of this part;

(ii) Those NO_X allowances that were allocated for the control period to any unit and transferred and recorded in the account pursuant to subpart G of this part, in order of their date of recordation;

(iii) Those NO_X allowances that were allocated for a prior control period to the unit under subpart E or I of this part; and

(iv) Those NO_X allowances that were allocated for a prior control period to any unit and transferred and recorded in the account pursuant to subpart G of this part, in order of their date of recordation.

(d) *Deductions for excess emissions.* (1) After making the deductions for compliance under paragraph (b) of this section, the Administrator will deduct from the unit's compliance account or the overdraft account of the source where the unit is located a number of NO_X allowances, allocated for a control period after the control period in which the unit has excess emissions, equal to three times the number of the unit's excess emissions.

(2) If the compliance account or overdraft account does not contain sufficient NO_X allowances, the Administrator will deduct the required number of NO_X allowances, regardless of the control period for which they were allocated, whenever NO_X allowances are recorded in either account.

(3) Any allowance deduction required under paragraph (d) of this section shall not affect the liability of the owners and operators of the NO_X Budget unit for any fine, penalty, or assessment, or their obligation to comply with any other remedy, for the same violation, as ordered under the Clean Air Act or applicable State law. The following guidelines will be followed in assessing fines, penalties or other obligations:

(i) For purposes of determining the number of days of violation, if a NO_X Budget unit has excess emissions for a control period, each day in the control period (153 days) constitutes a day in violation unless the owners and operators of the unit demonstrate that a lesser number of days should be considered.

(ii) Each ton of excess emissions is a separate violation.

(e) *Deductions for units sharing a common stack.* In the case of units sharing a common stack and having emissions that are not separately monitored or apportioned in accordance with subpart H of this part:

(1) The NO_X authorized account representative of the units may identify the percentage of NO_X allowances to be deducted from each such unit's compliance account to cover the unit's share of NO_X emissions from the common stack for a control period. Such identification shall be made in the compliance certification report submitted in accordance with § 97.30.

(2) Notwithstanding paragraph (b)(2)(i) of this section, the Administrator will deduct NO_X allowances for each such unit until the number of NO_X allowances deducted equals the unit's identified percentage under paragraph (e)(1) of this section or, if no percentage is identified, an equal percentage for each unit multiplied by the number of tons of NO_X emissions, as determined in accordance with subpart H of this part, from the common stack for the control period for which compliance is being determined. In addition to the deductions under the first sentence of this paragraph (e)(1), the Administrator will deduct NO_X allowances for each such unit until the number of NO_X allowances deducted equals the number of NO_X allowances required to account for actual heat input under § 97.42(e) for the unit for the control period.

(f) *Deduction of banked allowances.* Each year starting in 2006, after the Administrator has completed the designation of banked NO_X allowances under § 97.55(b) and before May 1 of the year, the Administrator will determine the extent to which banked NO_X allowances otherwise available under paragraph (a) of this section are available for compliance in the control period for the current year, as follows:

(1) The Administrator will determine the total number of banked NO_X allowances held in compliance accounts, overdraft accounts, or general accounts.

(2) If the total number of banked NO_X allowances determined, under paragraph (f)(1) of this section, to be held in compliance accounts, overdraft accounts, or general accounts is less than or equal to 10 percent of the sum of the trading program budgets under §97.40 for all States for the control period, any banked NO_X allowance may be deducted for compliance in accordance with paragraphs (a) through (e) of this section.

(3) If the total number of banked NO_X allowances determined, under paragraph (f)(1) of this section, to be held in compliance accounts, overdraft accounts, or general accounts exceeds 10 percent of the sum of the trading program budgets under §97.40 for all States for the control period, any banked allowance may be deducted for compliance in accordance with paragraphs (a) through (e) of this section, except as follows:

(i) The Administrator will determine the following ratio: 0.10 multiplied by the sum of the trading program budgets under §97.40 for all States for the control period and divided by the total number of banked NO_X allowances determined, under paragraph (f)(1) of this section, to be held in compliance accounts, overdraft accounts, or general accounts.

(ii) The Administrator will multiply the number of banked NO_X allowances in each compliance account or overdraft account by the ratio determined under paragraph (f)(3)(i) of this section. The resulting product is the number of banked NO_X allowances in the account that may be deducted for compliance in accordance with paragraphs (a) through (e) of this section. Any banked NO_X allowances in excess of the resulting product may be deducted for compliance in accordance with paragraphs (a) through (e) of this section, except that, if such NO_X allowances are used to make a deduction under paragraph (b) or (e) of this section, two (rather than one) such NO_X allowances shall authorize up to one ton of NO_X emissions during the control period and must be deducted for each deduction of one NO_X allowance required under paragraph (b) or (e) of this section.

(g) *Recordation of deductions.* The Administrator will record in the appropriate compliance account or overdraft account all deductions from such an account pursuant to paragraph (b), (d), (e), or (f) of this section.

[65 FR 2727, Jan. 18, 2000, as amended at 67 FR 21530, Apr. 30, 2002]

§97.55 Banking.

NO_X allowances may be banked for future use or transfer in a compliance account, an overdraft account, or a general account, as follows:

(a) Any NO_X allowance that is held in a compliance account, an overdraft account, or a general account will remain in such account unless and until the NO_X allowance is deducted or transferred under §97.31, §97.54, §97.56, or subpart G or I of this part.

(b) The Administrator will designate, as a ''banked'' NO_X allowance, any NO_X allowance that remains in a compliance account, an overdraft account, or a general account after the Administrator has made all deductions for a given control period from the compliance account or overdraft account pursuant to §97.54 (except deductions pursuant to §97.54(d)(2)) and that was allocated for that control period or a control period in a prior year.

§97.56 Account error.

The Administrator may, at his or her sole discretion and on his or her own motion, correct any error in any NO_X Allowance Tracking System account. Within 10 business days of making such correction, the Administrator will notify the NO_X authorized account representative for the account.

§97.57 Closing of general accounts.

(a) The NO_X authorized account representative of a general account may instruct the Administrator to close the account by submitting a statement requesting deletion of the account from the NO_X Allowance Tracking System and by correctly submitting for recordation under §97.60 an allowance transfer of all NO_X allowances in the account to one or more other NO_X Allowance Tracking System accounts.

(b) If a general account shows no activity for a period of a year or more and does not contain any NO_X allowances, the Administrator may notify

the NO_X authorized account representative for the account that the account will be closed and deleted from the NO_X Allowance Tracking System following 20 business days after the notice is sent. The account will be closed after the 20-day period unless before the end of the 20-day period the Administrator receives a correctly submitted transfer of NO_X allowances into the account under § 97.60 or a statement submitted by the NO_X authorized account representative demonstrating to the satisfaction of the Administrator good cause as to why the account should not be closed.

Subpart G—NO_X Allowance Transfers

§ 97.60 Submission of NO_X allowance transfers.

The NO_X authorized account representatives seeking recordation of a NO_X allowance transfer shall submit the transfer to the Administrator. To be considered correctly submitted, the NO_X allowance transfer shall include the following elements in a format specified by the Administrator:

(a) The numbers identifying both the transferor and transferee accounts;

(b) A specification by serial number of each NO_X allowance to be transferred; and

(c) The printed name and signature of the NO_X authorized account representative of the transferor account and the date signed.

§ 97.61 EPA recordation.

(a) Within 5 business days of receiving a NO_X allowance transfer, except as provided in paragraph (b) of this section, the Administrator will record a NO_X allowance transfer by moving each NO_X allowance from the transferor account to the transferee account as specified by the request, provided that:

(1) The transfer is correctly submitted under § 97.60; and

(2) The transferor account includes each NO_X allowance identified by serial number in the transfer.

(b) A NO_X allowance transfer that is submitted for recordation following the NO_X allowance transfer deadline and that includes any NO_X allowances allocated for a control period in a prior year or the same year as the NO_X allowance transfer deadline will not be recorded until after the Administrator completes the recordation of NO_X allowance allocations under § 97.53 for the control period in the same year as the NO_X allowance transfer deadline.

(c) Where a NO_X allowance transfer submitted for recordation fails to meet the requirements of paragraph (a) of this section, the Administrator will not record such transfer.

§ 97.62 Notification.

(a) *Notification of recordation.* Within 5 business days of recordation of a NO_X allowance transfer under § 97.61, the Administrator will notify the NO_X authorized account representatives of both the transferor and transferee accounts.

(b) *Notification of non-recordation.* Within 10 business days of receipt of a NO_X allowance transfer that fails to meet the requirements of § 97.61(a), the Administrator will notify the NO_X authorized account representatives of both accounts subject to the transfer of:

(1) A decision not to record the transfer; and

(2) The reasons for such non-recordation.

(c) Nothing in this section shall preclude the submission of a NO_X allowance transfer for recordation following notification of non-recordation.

Subpart H—Monitoring and Reporting

§ 97.70 General requirements.

The owners and operators, and to the extent applicable, the NO_X authorized account representative of a NO_X Budget unit, shall comply with the monitoring, recordkeeping, and reporting requirements as provided in this subpart and in subpart H of part 75 of this chapter. For purposes of complying with such requirements, the definitions in § 97.2 and in § 72.2 of this chapter shall apply, and the terms ''affected unit,'' ''designated representative,'' and ''continuous emission monitoring system'' (or ''CEMS'') in part 75 of this chapter shall be deemed to refer to the terms ''NO_X Budget unit,'' ''NO_X authorized account representative,'' and

''continuous emission monitoring system'' (or ''CEMS'') respectively, as defined in §97.2. The owner or operator of a unit that is not a NO_X Budget unit but that is monitored under §75.72(b)(2)(ii) of this chapter shall comply with the monitoring, recordkeeping, and reporting requirements for a NO_X Budget unit under this part.

(a) *Requirements for installation, certification, and data accounting.* The owner or operator of each NO_X Budget unit shall meet the following requirements. These provisions shall also apply to a unit for which an application for a NO_X Budget opt-in permit is submitted and not denied or withdrawn, as provided in subpart I of this part:

(1) Install all monitoring systems required under this subpart for monitoring NO_X mass emissions. This includes all systems required to monitor NO_X emission rate, NO_X concentration, heat input rate, and stack flow rate, in accordance with §§75.72 and 75.76 of this chapter.

(2) Install all monitoring systems for monitoring heat input rate.

(3) Successfully complete all certification tests required under §97.71 and meet all other requirements of this subpart and part 75 of this chapter applicable to the monitoring systems under paragraphs (a)(1) and (2) of this section.

(4) Record, report, and quality-assure the data from the monitoring systems under paragraphs (a)(1) and (2) of this section.

(b) *Compliance deadlines.* The owner or operator shall meet the certification and other requirements of paragraphs (a)(1) through (a)(3) of this section on or before the following dates. The owner or operator shall record, report and quality-assure the data from the monitoring systems under paragraphs (a)(1) and (a)(2) of this section on and after the following dates.

(1) For the owner or operator of a NO_X Budget unit for which the owner or operator intends to apply for early reduction credits under §97.43, by May 1, 2001. If the owner or operator of a NO_X Budget unit fails to meet this deadline, he or she is not eligible to apply for early reduction credits and is subject to the deadline under paragraph (b)(2) of this section.

(2) For the owner or operator of a NO_X Budget unit under §97.4(a) that commences operation before January 1, 2003 and that is not subject to or does not meet the deadline under paragraph (b)(1) of this section, by May 1, 2003.

(3) For the owner or operator of a NO_X Budget unit under §97.4(a)(1) that commences operation on or after January 1, 2003 and that reports on an annual basis under §97.74(d) by the later of the following dates:

(i) May 1, 2003; or

(ii) 90 days after the date on which the unit commences commercial operation.

(4) For the owner or operator of a NO_X Budget unit under §97.4(a)(1) that commences operation on or after January 1, 2003 and that reports on a control period basis under §97.74(d)(2)(ii), by no later than 90 days after the date on which the unit commences commercial operation, provided that this date is during a control period. If this date does not occur during a control period, the applicable deadline is May 1 immediately following this date.

(5) For the owner or operator of a NO_X Budget unit under §97.4(a)(2) that commences operation on or after January 1, 2003 and that reports on an annual basis under §97.74(d), by the later of the following dates:

(i) May 1, 2003; or

(ii) 180 days after the date on which the unit commences operation.

(6) For the owner or operator of a NO_X Budget unit under §97.4(a)(2) that commences operation on or after January 1, 2003 and that report on a control period basis under §97.74(d)(2)(ii), by 180 days after the date on which the unit commences operation, provided that this date is during a control period. If this date does not occur during a control period, the applicable deadline is May 1 immediately following this date.

(7) For the owner or operator of a NO_X Budget unit that has a new stack or flue for which construction is completed after the applicable deadline under paragraph (b)(1), (b)(2), (b)(3), (b)(4), (b)(5), or (b)(6) of this section or under subpart I of this part and that reports on an annual basis under §97.74(d), by 90 days after the date on

which emissions first exit to the atmosphere through the new stack or flue.

(8) For the owner or operator of a NO_X Budget unit that has a new stack or flue for which construction is completed after the applicable deadline under paragraph (b)(1), (b)(2), (b)(3), (b)(4), (b)(5), or (b)(6) of this section or under subpart I of this part and that reports on a control period basis under § 97.74(d)(2)(ii), by 90 days after the date on which emissions first exit to the atmosphere through the new stack or flue, provided that this date is during a control period. If this date does not occur during the control period, the applicable deadline is May 1 immediately following this date.

(9) For the owner or operator of a unit for which an application for a NO_X Budget opt-in permit is submitted and not denied or withdrawn, by the date specified under subpart I of this part.

(c) *Reporting data prior to initial certification.* The owner or operator of a NO_X Budget unit under paragraph (b)(3), (b)(4), (b)(5), or (b)(6) of this section shall determine, record and report NO_X mass emissions, heat input rate, and any other values required to determine NO_X mass emissions (e.g., NO_X emission rate and heat input rate, or NO_X concentration and stack flow rate) in accordance with § 75.70(g) of this chapter, from the date and hour that the unit starts operating until the date and hour on which the continuous emission monitoring system, excepted monitoring system under appendix D or E of part 75 of this chapter, or excepted monitoring methodology under § 75.19 of this chapter is provisionally certified.

(d) *Prohibitions.* (1) No owner or operator of a NO_X Budget unit shall use any alternative monitoring system, alternative reference method, or any other alternative for the required continuous emission monitoring system without having obtained prior written approval in accordance with § 97.75.

(2) No owner or operator of a NO_X Budget unit shall operate the unit so as to discharge, or allow to be discharged, NO_X emissions to the atmosphere without accounting for all such emissions in accordance with the applicable provisions of this subpart and part 75 of this chapter, except as provided in § 75.74 of this chapter.

(3) No owner or operator of a NO_X Budget unit shall disrupt the continuous emission monitoring system, any portion thereof, or any other approved emission monitoring method, and thereby avoid monitoring and recording NO_X mass emissions discharged into the atmosphere, except for periods of recertification or periods when calibration, quality assurance testing, or maintenance is performed in accordance with the applicable provisions of this subpart and part 75 of this chapter or except as provided in § 75.74 of this chapter.

(4) No owner or operator of a NO_X Budget unit shall retire or permanently discontinue use of the continuous emission monitoring system, any component thereof, or any other approved emission monitoring system under this subpart, except under any one of the following circumstances:

(i) During the period that the unit is covered by an exemption under § 97.4(b) or § 97.5 that is in effect;

(ii) The owner or operator is monitoring emissions from the unit with another certified monitoring system approved, in accordance with the applicable provisions of this subpart and part 75 of this chapter, by the permitting authority for use at that unit that provides emission data for the same pollutant or parameter as the retired or discontinued monitoring system; or

(iii) The NO_X authorized account representative submits notification of the date of certification testing of a replacement monitoring system for the retired or discontinued monitoring system in accordance with § 97.71(b)(2).

[65 FR 2727, Jan. 18, 2000, as amended at 67 FR 21530, Apr. 30, 2002]

§ 97.71 Initial certification and recertification procedures.

(a) The owner or operator of a NO_X Budget unit that is subject to an Acid Rain emissions limitation shall comply with the initial certification and recertification procedures of part 75 of this chapter, except that:

(1) If, prior to January 1, 1998, the Administrator approved a petition under § 75.17(a) or (b) of this chapter for apportioning the NO_X emission rate

measured in a common stack or a petition under §75.66 of this chapter for an alternative to a requirement in §75.17 of this chapter, the NO_X authorized account representative shall resubmit the petition to the Administrator under §97.75(a) to determine if the approval applies under the NO_X Budget Trading Program.

(2) For any additional CEMS required under the common stack provisions in §75.72 of this chapter or for any NO_X concentration CEMS used under the provisions of §75.71(a)(2) of this chapter, the owner or operator shall meet the requirements of paragraph (b) of this section.

(b) The owner or operator of a NO_X Budget unit that is not subject to an Acid Rain emissions limitation shall comply with the following initial certification and recertification procedures. The owner or operator of such a unit that qualifies to use the low mass emissions excepted monitoring methodology under §75.19 of this chapter or that qualifies to use an alternative monitoring system under subpart E of part 75 of this chapter shall comply with the following procedures, as modified by paragraph (c) or (d) of this section. The owner or operator of a NO_X Budget unit that is subject to an Acid Rain emissions limitation and that requires additional CEMS under the common stack provisions in §75.72 of this chapter or uses a NO_X concentration CEMS under §75.71(a)(2) of this chapter shall comply with the following procedures.

(1) *Requirements for initial certification.* The owner or operator shall ensure that each monitoring system required by subpart H of part 75 of this chapter (which includes the automated data acquisition and handling system) successfully completes all of the initial certification testing required under §75.20 of this chapter by the applicable deadline in §97.70(b). In addition, whenever the owner or operator installs a monitoring system in order to meet the requirements of this part in a location where no such monitoring system was previously installed, initial certification in accordance with §75.20 of this chapter is required.

(2) *Requirements for recertification.* Whenever the owner or operator makes a replacement, modification, or change in a certified monitoring system that may significantly affect the ability of the system to accurately measure or record NO_X mass emissions or heat input rate or to meet the requirements of §75.21 of this chapter or appendix B to part 75 of this chapter, the owner or operator shall recertify the monitoring system in accordance with §75.20(b) of this chapter. Furthermore, whenever the owner or operator makes a replacement, modification, or change to the flue gas handling system or the unit's operation that may significantly change the stack flow or concentration profile, the owner or operator shall recertify the continuous emissions monitoring system in accordance with §75.20(b) of this chapter. Examples of changes that require recertification include: replacement of the analyzer, complete replacement of an existing continuous emission monitoring system, or change in location or orientation of the sampling probe or site.

(3) *Certification approval process for initial certification and recertification*—(i) *Notification of certification.* The NO_X authorized account representative shall submit to the Administrator, the appropriate EPA Regional Office and the permitting authority written notice of the dates of certification in accordance with §97.73.

(ii) *Certification application.* The NO_X authorized account representative shall submit to the Administrator, the appropriate EPA Regional Office and the permitting authority a certification application for each monitoring system required under subpart H of part 75 of this chapter. A complete certification application shall include the information specified in subpart H of part 75 of this chapter.

(iii) Except for units using the low mass emission excepted methodology under §75.19 of this chapter, the provisional certification date for a monitor shall be determined in accordance with §75.20(a)(3) of this chapter. A provisionally certified monitor may be used under the NO_X Budget Trading Program for a period not to exceed 120 days after receipt by the Administrator of the complete certification application for the monitoring system or component thereof under paragraph

(b)(3)(ii) of this section. Data measured and recorded by the provisionally certified monitoring system or component thereof, in accordance with the requirements of part 75 of this chapter, will be considered valid quality-assured data (retroactive to the date and time of provisional certification), provided that the Administrator does not invalidate the provisional certification by issuing a notice of disapproval within 120 days of receipt of the complete certification application by the Administrator.

(iv) *Certification application formal approval process.* The Administrator will issue a written notice of approval or disapproval of the certification application to the owner or operator within 120 days of receipt of the complete certification application under paragraph (b)(3)(ii) of this section. In the event the Administrator does not issue such a notice within such 120-day period, each monitoring system that meets the applicable performance requirements of part 75 of this chapter and is included in the certification application will be deemed certified for use under the NO_X Budget Trading Program.

(A) *Approval notice.* If the certification application is complete and shows that each monitoring system meets the applicable performance requirements of part 75 of this chapter, then the Administrator will issue a written notice of approval of the certification application within 120 days of receipt.

(B) *Incomplete application notice.* A certification application will be considered complete when all of the applicable information required to be submitted under paragraph (b)(3)(ii) of this section has been received by the Administrator. If the certification application is not complete, then the Administrator will issue a written notice of incompleteness that sets a reasonable date by which the NO_X authorized account representative must submit the additional information required to complete the certification application. If the NO_X authorized account representative does not comply with the notice of incompleteness by the specified date, then the Administrator may issue a notice of disapproval under paragraph (b)(3)(iv)(C) of this section. The 120-day review period shall not begin prior to receipt of a complete certification application.

(C) *Disapproval notice.* If the certification application shows that any monitoring system or component thereof does not meet the performance requirements of this part, or if the certification application is incomplete and the requirement for disapproval under paragraph (b)(3)(iv)(B) of this section has been met, then the Administrator will issue a written notice of disapproval of the certification application. Upon issuance of such notice of disapproval, the provisional certification is invalidated by the Administrator and the data measured and recorded by each uncertified monitoring system or component thereof shall not be considered valid quality-assured data beginning with the date and hour of provisional certification (as defined under § 75.20(a)(3) of this chapter). The owner or operator shall follow the procedures for loss of certification in paragraph (b)(3)(v) of this section for each monitoring system or component thereof that is disapproved for initial certification.

(D) *Audit decertification.* The Administrator may issue a notice of disapproval of the certification status of a monitor in accordance with § 97.72(b).

(v) *Procedures for loss of certification.* If the Administrator issues a notice of disapproval of a certification application under paragraph (b)(3)(iv)(C) of this section or a notice of disapproval of certification status under paragraph (b)(3)(iv)(D) of this section, then:

(A) The owner or operator shall substitute the following values, for each hour of unit operation during the period of invalid data specified under § 75.20(a)(4)(iii), § 75.20(b)(5), § 75.20(h)(4), or § 75.21(e) and continuing until the date and hour specified under § 75.20(a)(5)(i) of this chapter:

(*1*) For units that the owner or operator intends to monitor or monitors for NO_X emission rate and heat input rate or intends to determine or determines NO_X mass emissions using the low mass emission excepted methodology under § 75.19 of this chapter, the maximum potential NO_X emission rate and the maximum potential hourly heat input of the unit; and

(*2*) For units that the owner or operator intends to monitor or monitors for NO_X mass emissions using a NO_X pollutant concentration monitor and a flow monitor, the maximum potential concentration of NO_X and the maximum potential flow rate of the unit under section 2 of appendix A of part 75 of this chapter.

(B) The NO_X authorized account representative shall submit a notification of certification retest dates and a new certification application in accordance with paragraphs (b)(3)(i) and (ii) of this section.

(C) The owner or operator shall repeat all certification tests or other requirements that were failed by the monitoring system, as indicated in the Administrator's notice of disapproval, no later than 30 unit operating days after the date of issuance of the notice of disapproval.

(c) *Initial certification and recertification procedures for low mass emission units using the excepted methodologies under §75.19 of this chapter*. The owner or operator of a gas-fired or oil-fired unit using the low mass emissions excepted methodology under §75.19 of this chapter and not subject to an Acid Rain emissions limitation shall meet the applicable general operating requirements of §75.10 of this chapter and the applicable requirements of §75.19 of this chapter. The owner or operator of such a unit shall also meet the applicable certification and recertification procedures of paragraph (b) of this section, except that the excepted methodology shall be deemed provisionally certified for use under the NO_X Budget Trading Program as of the following dates:

(i) For a unit that does not have monitoring equipment initially certified or recertified for the NO_X Budget Trading Program as of the date on which the NO_X authorized account representative submits the certification application under §75.19 of this chapter for the unit, starting on the date of such submission until the completion of the period for the Administrator's review.

(ii) For a unit that has monitoring equipment initially certified or recertified for the NO_X Budget Trading Program as of the date on which the NO_X authorized account representative submits the certification application under §75.19 of this chapter for the unit and that reports data on an annual basis under §97.74(d), starting January 1 of the year after the year of such submission until the completion of the period for the Administrator's review.

(iii) For a unit that has monitoring equipment initially certified or recertified for the NO_X Budget Trading Program as of the date on which the NO_X Authorized Account Representative submits the certification application under §75.19 of this chapter for the unit and that reports on a control season basis under §97.74(d), starting May 1 of the control period after the year of such submission until the completion of the period for the Administrator's review.

(d) *Certification/recertification procedures for alternative monitoring systems*. The NO_X authorized account representative of each unit not subject to an Acid Rain emissions limitation for which the owner or operator intends to use an alternative monitoring system approved by the Administrator under subpart E of part 75 of this chapter shall comply with the applicable certification procedures of paragraph (b) of this section before using the system under the NO_X Budget Trading Program. The NO_X authorized account representative shall also comply with the applicable recertification procedures of paragraph (b) of this section. Section 75.20(f) of this chapter shall apply to such alternative monitoring system.

§97.72 Out of control periods.

(a) Whenever any monitoring system fails to meet the quality assurance or data validation requirements of part 75 of this chapter, data shall be substituted using the applicable procedures in subpart D, appendix D, or appendix E of part 75 of this chapter.

(b) *Audit decertification*. Whenever both an audit of a monitoring system and a review of the initial certification or recertification application reveal that any system or component should not have been certified or recertified because it did not meet a particular performance specification or other requirement under §97.71 or the applicable provisions of part 75 of this chapter,

both at the time of the initial certification or recertification application submission and at the time of the audit, the Administrator will issue a notice of disapproval of the certification status of such system or component. For the purposes of this paragraph, an audit shall be either a field audit or an audit of any information submitted to the permitting authority or the Administrator. By issuing the notice of disapproval, the Administrator revokes prospectively the certification status of the system or component. The data measured and recorded by the system or component shall not be considered valid quality-assured data from the date of issuance of the notification of the revoked certification status until the date and time that the owner or operator completes subsequently approved initial certification or recertification tests for the system or component.

§ 97.73 Notifications.

(a) The NO_X authorized account representative for a NO_X Budget unit shall submit written notice to the Administrator, the appropriate EPA Regional Office, and the permitting authority in accordance with § 75.61 of this chapter.

(b) For any unit that does not have an Acid Rain emissions limitation, the permitting authority may waive the requirement to notify the permitting authority in paragraph (a) of this section.

§ 97.74 Recordkeeping and reporting.

(a) *General provisions.* (1) The NO_X authorized account representative shall comply with all recordkeeping and reporting requirements in this section and with the requirements of § 97.10(e)(1).

(2) If the NO_X authorized account representative for a NO_X Budget unit subject to an Acid Rain emission limitation who signed and certified any submission that is made under subpart F or G of part 75 of this chapter and that includes data and information required under this subpart or subpart H of part 75 of this chapter is not the same person as the designated representative or the alternative designated representative for the unit under part 72 of this chapter, then the submission must also be signed by the designated representative or the alternative designated representative.

(b) *Monitoring plans.* (1) The owner or operator of a unit subject to an Acid Rain emissions limitation shall comply with requirements of § 75.62 of this chapter, except that the monitoring plan shall also include all of the information required by subpart H of part 75 of this chapter.

(2) The owner or operator of a unit that is not subject to an Acid Rain emissions limitation shall comply with requirements of § 75.62 of this chapter, except that the monitoring plan is only required to include the information required by subpart H of part 75 of this chapter.

(c) *Certification applications.* The NO_X authorized account representative shall submit an application to the Administrator, the appropriate EPA Regional Office, and the permitting authority within 45 days after completing all initial certification or recertification tests required under § 97.71 including the information required under subpart H of part 75 of this chapter.

(d) *Quarterly reports.* The NO_X authorized account representative shall submit quarterly reports, as follows:

(1) If a unit is subject to an Acid Rain emission limitation or if the owner or operator of the NO_X budget unit chooses to meet the annual reporting requirements of this subpart H, the NO_X authorized account representative shall submit a quarterly report for each calendar quarter beginning with:

(i) For a unit for which the owner or operator intends to apply or applies for the early reduction credits under § 97.43, the calendar quarter that includes the date of initial provisional certification under § 97.71(b)(3)(iii) or § 97.71(c). Data shall be recorded and reported from the date and hour corresponding to the date and hour of provisional certification; or

(ii) For a unit that commences operation on or before May 1, 2003 and that is not subject to paragraph (d)(1)(i) of this section, the earlier of the calender quarter that includes the date of initial provisional certification under § 97.71(b)(3)(iii) or § 97.71(c) or, if the certification tests are not completed by May 1, 2003, the calendar quarter

covering May 1, 2003 through June 30, 2003. Data shall be recorded and reported from the earlier of the date and hour corresponding to the date and hour of provisional certification or the first hour on May 1, 2003; or

(iii) For a unit that commences operation after May 1, 2003, the calendar quarter in which the unit commences operation. Data shall be recorded and reported from the date and hour corresponding to when the unit commences operation.

(2) If a NO_X budget unit is not subject to an Acid Rain emission limitation, then the NO_X authorized account representative shall either:

(i) Meet all of the requirements of part 75 related to monitoring and reporting NO_X mass emissions during the entire year and meet the deadlines specified in paragraph (d)(1) of this section; or

(ii) Submit quarterly reports covering the period May 1 through September 30 of each year and including the data described in §75.74(c)(6) of this chapter. The NO_X authorized account representative shall submit such quarterly reports, beginning with:

(A) For a unit for which the owner or operator intends to apply or applies for early reduction credits under §97.43, the calendar quarter that includes the date of initial provisional certification under §97.71(b)(3)(iii) or §97.71(c). Data shall be recorded and reported from the date and hour corresponding to the date and hour of provisional certification; or

(B) For a unit that commences operation on or before May 1, 2003 and that is not subject to paragraph (d)(2)(i) of this section, the calendar quarter covering May 1, 2003 through June 30, 2003. Data shall be recorded and reported from the earlier of the date and hour corresponding to the date and hour of initial provisional certification under §97.71(b)(3)(iii) or §97.71(c) or the first hour of May 1, 2003; or

(C) For a unit that commences operation after May 1, 2003 and during a control period, the calendar quarter in which the unit commences operation. Data shall be reported from the date and hour corresponding to when the unit commences operation; or

(D) For a unit that commences operation after May 1, 2003 and not during a control period, the calendar quarter covering the first control period after the unit commences operation. Data shall be recorded and reported from the earlier of the date and hour corresponding to the date and hour of initial provisional certification under §97.71(b)(3)(iii) or §97.71(c) or the first hour of May 1 of the first control period after the unit commences operation.

(3) The NO_X authorized account representative shall submit each quarterly report to the Administrator within 30 days following the end of the calendar quarter covered by the report. Quarterly reports shall be submitted in the manner specified in subpart H of part 75 of this chapter and §75.64 of this chapter.

(i) For units subject to an Acid Rain emissions limitation, quarterly reports shall include all of the data and information required in subpart H of part 75 of this chapter for each NO_X Budget unit (or group of units using a common stack) and the data and information required in subpart G of part 75 of this chapter.

(ii) For units not subject to an Acid Rain emissions limitation, quarterly reports are only required to include all of the data and information required in subpart H of part 75 of this chapter for each NO_X Budget unit (or group of units using a common stack).

(4) *Compliance certification*. The NO_X authorized account representative shall submit to the Administrator a compliance certification in support of each quarterly report based on reasonable inquiry of those persons with primary responsibility for ensuring that all of the unit's emissions are correctly and fully monitored. The certification shall state that:

(i) The monitoring data submitted were recorded in accordance with the applicable requirements of this subpart and part 75 of this chapter, including the quality assurance procedures and specifications;

(ii) For a unit with add-on NO_X emission controls and for all hours where data are substituted in accordance with §75.34(a)(1) of this chapter, the

add-on emission controls were operating within the range of parameters listed in the quality assurance/quality control program under appendix B of part 75 of this chapter and the substitute values do not systematically underestimate NO_X emissions; and

(iii) For a unit that is reporting on a control period basis under paragraph (d)(2)(ii) of this section, the NO_X emission rate and NO_X concentration values substituted for missing data under subpart D of part 75 of this chapter are calculated using only values from a control period and do not systematically underestimate NO_X emissions.

[65 FR 2727, Jan. 18, 2000, as amended at 67 FR 21530, Apr. 30, 2002]

§ 97.75 Petitions.

(a) The NO_X authorized account representative of a NO_X Budget unit may submit a petition under § 75.66 of this chapter to the Administrator requesting approval to apply an alternative to any requirement of this subpart.

(b) Application of an alternative to any requirement of this subpart is in accordance with this subpart only to the extent that the petition is approved by the Administrator under § 75.66 of this chapter.

§ 97.76 Additional requirements to provide heat input data.

The owner or operator of a NO_X Budget unit that monitors and reports NO_X mass emissions using a NO_X concentration system and a flow system shall also monitor and report heat input rate at the unit level using the procedures set forth in part 75 of this chapter.

Subpart I—Individual Unit Opt-ins.

§ 97.80 Applicability.

A unit that is in a State (as defined in § 97.2), is not a NO_X Budget unit under § 97.4(a), is not a unit exempt under § 97.4(b), vents all of its emissions to a stack, and is operating, may qualify to be a NO_X Budget opt-in unit under this subpart. A unit that is a NO_X Budget unit under § 97.4(a), is covered by an exemption under § 97.4(b) or § 97.5 that is in effect, or is not operating is not eligible to be a NO_X Budget opt-in unit.

§ 97.81 General.

Except otherwise as provided in this part, a NO_X Budget opt-in unit shall be treated as a NO_X Budget unit for purposes of applying subparts A through H of this part.

§ 97.82 NO_X authorized account representative.

A unit for which an application for a NO_X Budget opt-in permit is submitted, or a NO_X Budget opt-in unit, located at the same source as one or more NO_X Budget units, shall have the same NO_X authorized account representative as such NO_X Budget units.

§ 97.83 Applying for NO_X Budget opt-in permit.

(a) *Applying for initial NO_X Budget opt-in permit.* In order to apply for an initial NO_X Budget opt-in permit, the NO_X authorized account representative of a unit qualified under § 97.80 may submit to the Administrator and the permitting authority at any time, except as provided under § 97.86(g):

(1) A complete NO_X Budget permit application under § 97.22;

(2) A monitoring plan submitted in accordance with subpart H of this part; and

(3) A complete account certificate of representation under § 97.13, if no NO_X authorized account representative has been previously designated for the unit.

(b) *Duty to reapply.* Unless the NO_X Budget opt-in permit is terminated or revised under § 97.86(e) or § 97.87(b)(1)(i), the NO_X authorized account representative of a NO_X Budget opt-in unit shall submit to the Administrator and permitting authority a complete NO_X Budget permit application under § 97.22 to renew the NO_X Budget opt-in permit in accordance with § 97.21(c) and, if applicable, an updated monitoring plan in accordance with subpart H of this part.

§ 97.84 Opt-in process.

The permitting authority will issue or deny an initial NO_X Budget opt-in permit for a unit for which an application for a NO_X Budget opt-in permit

under §97.83 is submitted, in accordance with §97.20 and the following:

(a) *Interim review of monitoring plan.* The Administrator will determine, on an interim basis, the sufficiency of the monitoring plan accompanying the initial application for a NO_X Budget opt-in permit under §97.83. A monitoring plan is sufficient, for purposes of interim review, if the plan appears to contain information demonstrating that the NO_X emissions rate and heat input rate of the unit are monitored and reported in accordance with subpart H of this part. A determination of sufficiency shall not be construed as acceptance or approval of the unit's monitoring plan.

(b) If the Administrator determines that the unit's monitoring plan is sufficient under paragraph (a) of this section and after completion of monitoring system certification under subpart H of this part, the NO_X emissions rate and the heat input of the unit shall be monitored and reported in accordance with subpart H of this part for one full control period during which percent monitor data availability is not less than 90 percent and during which the unit is in full compliance with any applicable State or Federal emissions or emissions-related requirements. Solely for purposes of applying the requirements in the prior sentence, the unit shall be treated as a ''NO_X Budget unit'' prior to issuance of a NO_X Budget opt-in permit covering the unit.

(c) Based on the information monitored and reported under paragraph (b) of this section, the Administrator will calculate the unit's baseline heat input, which will equal the unit's total heat input (in mmBtu) for the control period, and the unit's baseline NO_X emissions rate, which will equal the unit's total NO_X mass emissions (in lb) for the control period divided by the unit's baseline heat input.

(d) *Issuance of draft NO_X Budget opt-in permit for public comment.* The permitting authority will issue a draft NO_X Budget opt-in permit for public comment in accordance with §97.20.

(e) Not withstanding paragraphs (a) through (d) of this section, if at any time before issuance of a draft NO_X Budget opt-in permit for public comment for the unit, the Administrator or the permitting authority determines that the unit does not qualify as a NO_X Budget opt-in unit under §97.80, the permitting authority will issue a draft denial of a NO_X Budget opt-in permit for public comment for the unit in accordance with §97.20.

(f) *Withdrawal of application for NO_X Budget opt-in permit.* A NO_X authorized account representative of a unit may withdraw its application for an initial NO_X Budget opt-in permit under §97.83 at any time prior to the issuance of the initial NO_X Budget opt-in permit. Once the application for a NO_X Budget opt-in permit is withdrawn, a NO_X authorized account representative wanting to reapply must submit a new application for an initial NO_X Budget permit under §97.83.

(g) The unit shall be a NO_X Budget opt-in unit and a NO_X Budget unit starting May 1 of the first control period starting after the issuance of the initial NO_X Budget opt-in permit by the permitting authority.

§97.85 NO_X Budget opt-in permit contents.

(a) Each NO_X Budget opt-in permit will contain all elements required for a complete NO_X Budget opt-in permit application under §97.22.

(b) Each NO_X Budget opt-in permit is deemed to incorporate automatically the definitions of terms under §97.2 and, upon recordation by the Administrator under subpart F or G of this part, every allocation, transfer, or deduction of NO_X allowances to or from the compliance accounts of each NO_X Budget opt-in unit covered by the NO_X Budget opt-in permit or the overdraft account of the NO_X Budget source where the NO_X Budget opt-in unit is located.

§97.86 Withdrawal from NO_X Budget Trading Program.

(a) *Requesting withdrawal.* To withdraw from the NO_X Budget Trading Program, the NO_X authorized account representative of a NO_X Budget opt-in unit shall submit to the Administrator and the permitting authority a request to withdraw effective as of a specified date prior to May 1 or after September 30. The submission shall be made no

later than 90 days prior to the requested effective date of withdrawal.

(b) *Conditions for withdrawal.* Before a NO_X Budget opt-in unit covered by a request under paragraph (a) of this section may withdraw from the NO_X Budget Trading Program and the NO_X Budget opt-in permit may be terminated under paragraph (e) of this section, the following conditions must be met:

(1) For the control period immediately before the withdrawal is to be effective, the NO_X authorized account representative must submit or must have submitted to the Administrator and the permitting authority an annual compliance certification report in accordance with § 97.30.

(2) If the NO_X Budget opt-in unit has excess emissions for the control period immediately before the withdrawal is to be effective, the Administrator will deduct or has deducted from the NO_X Budget opt-in unit's compliance account, or the overdraft account of the NO_X Budget source where the NO_X Budget opt-in unit is located, the full amount required under § 97.54(d) for the control period.

(3) After the requirements for withdrawal under paragraphs (b)(1) and (2) of this section are met, the Administrator will deduct from the NO_X Budget opt-in unit's compliance account, or the overdraft account of the NO_X Budget source where the NO_X Budget opt-in unit is located, NO_X allowances equal in number to and allocated for the same or a prior control period as any NO_X allowances allocated to that source under § 97.88 for any control period for which the withdrawal is to be effective. The Administrator will close the NO_X Budget opt-in unit's compliance account and transfer any remaining allowances to a general account specified by the owners and operators of the NO_X Budget opt-in unit.

(c) A NO_X Budget opt-in unit that withdraws from the NO_X Budget Trading Program shall comply with all requirements under the NO_X Budget Trading Program concerning all years for which such NO_X Budget opt-in unit was a NO_X Budget opt-in unit, even if such requirements arise or must be complied with after the withdrawal takes effect.

(d) *Notification.* (1) After the requirements for withdrawal under paragraphs (a) and (b) of this section are met (including deduction of the full amount of NO_X allowances required), the Administrator will issue a notification to the permitting authority and the NO_X authorized account representative of the NO_X Budget opt-in unit of the acceptance of the withdrawal of the NO_X Budget opt-in unit as of a specified effective date that is after such requirements have been met and that is prior to May 1 or after September 30.

(2) If the requirements for withdrawal under paragraphs (a) and (b) of this section are not met, the Administrator will issue a notification to the permitting authority and the NO_X authorized account representative of the NO_X Budget opt-in unit that the request to withdraw is denied. If the NO_X Budget opt-in unit's request to withdraw is denied, the NO_X Budget opt-in unit shall remain subject to the requirements for a NO_X Budget opt-in unit.

(e) *Permit revision.* After the Administrator issues a notification under paragraph (d)(1) of this section that the requirements for withdrawal have been met, the permitting authority will revise the NO_X Budget permit covering the NO_X Budget opt-in unit to terminate the NO_X Budget opt-in permit as of the effective date specified under paragraph (d)(1) of this section. A NO_X Budget opt-in unit shall continue to be a NO_X Budget opt-in unit until the effective date of the termination.

(f) *Reapplication upon failure to meet conditions of withdrawal.* If the Administrator denies the request to withdraw the NO_X Budget opt-in unit, the NO_X authorized account representative may submit another request to withdraw in accordance with paragraphs (a) and (b) of this section.

(g) *Ability to return to the NO_X Budget Trading Program.* Once a NO_X Budget opt-in unit withdraws from the NO_X Budget Trading Program and its NO_X Budget opt-in permit is terminated under paragraph (e) of this section, the NO_X authorized account representative may not submit another application for a NO_X Budget opt-in permit under § 97.83 for the unit prior to the date that is 4 years after the date on which

the terminated NO_X Budget opt-in permit became effective.

§97.87 Change in regulatory status.

(a) *Notification.* When a NO_X Budget opt-in unit becomes a NO_X Budget unit under §97.4(a), the NO_X authorized account representative shall notify in writing the permitting authority and the Administrator of such change in the NO_X Budget opt-in unit's regulatory status, within 30 days of such change.

(b) *Permitting authority's and Administrator's action.* (1)(i) When the NO_X Budget opt-in unit becomes a NO_X Budget unit under §97.4(a), the permitting authority will revise the NO_X Budget opt-in unit's NO_X Budget opt-in permit to meet the requirements of a NO_X Budget permit under §97.23 as of an effective date that is the date on which such NO_X Budget opt-in unit becomes a NO_X Budget unit under §97.4(a).

(ii)(A) The Administrator will deduct from the compliance account for the NO_X Budget unit under paragraph (b)(1)(i) of this section, or the overdraft account of the NO_X Budget source where the unit is located, NO_X allowances equal in number to and allocated for the same or a prior control period as:

(*1*) Any NO_X allowances allocated to the NO_X Budget unit (as a NO_X Budget opt-in unit) under §97.88 for any control period after the last control period during which the unit's NO_X Budget opt-in permit was effective; and

(*2*) If the effective date of the NO_X Budget permit revision under paragraph (b)(1)(i) of this section is during a control period, the NO_X allowances allocated to the NO_X Budget unit (as a NO_X Budget opt-in unit) under §97.88 for the control period multiplied by the number of days in the control period starting with the effective date of the permit revision under paragraph (b)(1)(i) of this section, divided by the total number of days in the control period, and rounded to the nearest whole number of NO_X allowances as appropriate.

(B) The NO_X authorized account representative shall ensure that the compliance account of the NO_X Budget unit under paragraph (b)(1)(i) of this section, or the overdraft account of the NO_X Budget source where the unit is located, contains the NO_X allowances necessary for completion of the deduction under paragraph (b)(1)(ii)(A) of this section. If the compliance account or overdraft account does not contain the necessary NO_X allowances, the Administrator will deduct the required number of NO_X allowances, regardless of the control period for which they were allocated, whenever NO_X allowances are recorded in either account.

(iii)(A) For every control period during which the NO_X Budget permit revised under paragraph (b)(1)(i) of this section is in effect, the NO_X Budget unit under paragraph (b)(1)(i) of this section will be treated, solely for purposes of NO_X allowance allocations under §97.42, as a unit that commenced operation on the effective date of the NO_X Budget permit revision under paragraph (b)(1)(i) of this section and will be allocated NO_X allowances under §97.42. The unit's deadline under §97.84(b) for meeting monitoring requirements in accordance with subpart H of this part shall not changed by the change in the unit's regulatory status or by the revision of the NO_X Budget permit under paragraph (b)(1)(i) of this section.

(B) Notwithstanding paragraph (b)(1)(iii)(A) of this section, if the effective date of the NO_X Budget permit revision under paragraph (b)(1)(i) of this section is during a control period, the following number of NO_X allowances will be allocated to the NO_X Budget unit under paragraph (b)(1)(i) of this section under §97.42 for the control period: the number of NO_X allowances otherwise allocated to the NO_X Budget unit under §97.42 for the control period multiplied by the number of days in the control period starting with the effective date of the permit revision under paragraph (b)(1)(i) of this section, divided by the total number of days in the control period, and rounded to the nearest whole number of NO_X allowances as appropriate.

(2)(i) When the NO_X authorized account representative of a NO_X Budget opt-in unit does not renew its NO_X Budget opt-in permit under §97.83(b), the Administrator will deduct from the NO_X Budget opt-in unit's compliance

account, or the overdraft account of the NO_X Budget source where the NO_X Budget opt-in unit is located, NO_X allowances equal in number to and allocated for the same or a prior control period as any NO_X allowances allocated to the NO_X Budget opt-in unit under § 97.88 for any control period after the last control period for which the NO_X Budget opt-in permit is effective. The NO_X authorized account representative shall ensure that the NO_X Budget opt-in unit's compliance account or the overdraft account of the NO_X Budget source where the NO_X Budget opt-in unit is located contains the NO_X allowances necessary for completion of such deduction. If the compliance account or overdraft account does not contain the necessary NO_X allowances, the Administrator will deduct the required number of NO_X allowances, regardless of the control period for which they were allocated, whenever NO_X allowances are recorded in either account.

(ii) After the deduction under paragraph (b)(2)(i) of this section is completed, the Administrator will close the NO_X Budget opt-in unit's compliance account. If any NO_X allowances remain in the compliance account after completion of such deduction and any deduction under § 97.54, the Administrator will close the NO_X Budget opt-in unit's compliance account and transfer any remaining allowances to a general account specified by the owners and operators of the NO_X Budget opt-in unit.

§ 97.88 NO_X allowance allocations to opt-in units.

(a) *NO_X allotment allocation.* (1) By April 1 immediately before the first control period for which the NO_X Budget opt-in permit is effective, the Administrator will determine by order the NO_X allowance allocations for the NO_X Budget opt-in unit for the control period in accordance with paragraph (b) of this section.

(2) By no later than April 1, after the first control period for which the NO_X Budget opt-in permit is in effect, and April 1 of each year thereafter, the Administrator will determine by order the NO_X allowance allocations for the NO_X Budget opt-in unit for the next control period, in accordance with paragraph (b) of this section.

(3) The Administrator will make available to the public each determination of NO_X allowance allocations under paragraph (a)(1) or (2) of this section and will provide an opportunity for submission of objections to the determination. Objections shall be limited to addressing whether the determination is in accordance with paragraph (b) of this section. Based on any such objections, the Administrator will adjust each determination to the extent necessary to ensure that it is in accordance with paragraph (b) of this section.

(b) For each control period for which the NO_X Budget opt-in unit has an approved NO_X Budget opt-in permit, the NO_X Budget opt-in unit will be allocated NO_X allowances in accordance with the following procedures:

(1) The heat input (in mmBtu) used for calculating NO_X allowance allocations will be the lesser of:

(i) The unit's baseline heat input determined pursuant to § 97.84(c); or

(ii) The unit's heat input, as determined in accordance with subpart H of this part, for the control period in the year prior to the year of the control period for which the NO_X allocations are being calculated.

(2) The Administrator will allocate NO_X allowances to the unit in an amount equaling the heat input determined under paragraph (b)(1) of this section multiplied by the lesser of the unit's baseline NO_X emissions rate determined under § 97.84(c) or the most stringent State or federal NO_X emissions limitation applicable to the unit during the control period, divided by 2,000 lb/ton, and rounded to the nearest whole number of NO_X allowances as appropriate.

APPENDIX A TO PART 97—FINAL SECTION 126 RULE: EGU ALLOCATIONS, 2004–2007

ST	Plant	Plant_id	Point_id	NO_X allocation for EGUs
DC	BENNING	603	15	80
DC	BENNING	603	16	117
DE	CHRISTIANA SUB	591	11	5

ST	Plant	Plant_id	Point_id	NO_X allocation for EGUs
DE	CHRISTIANA SUB	591	14	5
DE	DELAWARE CITY	52193	B4	141
DE	DELAWARE CITY	52193	ST_1	155
DE	DELAWARE CITY	52193	ST_2	159
DE	DELAWARE CITY	52193	ST_3	158
DE	EDGE MOOR	593	3	234
DE	EDGE MOOR	593	4	401
DE	EDGE MOOR	593	5	602
DE	HAY ROAD	7153	**3	184
DE	HAY ROAD	7153	—1	235
DE	HAY ROAD	7153	—2	207
DE	INDIAN RIVER	594	1	187
DE	INDIAN RIVER	594	2	194
DE	INDIAN RIVER	594	3	369
DE	INDIAN RIVER	594	4	729
DE	MCKEE RUN	599	3	119
DE	VAN SANT STATION	7318	**11	7
IN	ANDERSON	7336	—ACT1	5
IN	ANDERSON	7336	—ACT2	5
IN	CLIFTY CREEK	983	1	558
IN	CLIFTY CREEK	983	2	543
IN	CLIFTY CREEK	983	3	564
IN	CLIFTY CREEK	983	4	525
IN	CLIFTY CREEK	983	5	561
IN	CLIFTY CREEK	983	6	509
IN	CONNERSVILLE	1002	1	1
IN	CONNERSVILLE	1002	2	1
IN	GALLAGHER	1008	1	290
IN	GALLAGHER	1008	2	276
IN	GALLAGHER	1008	3	347
IN	GALLAGHER	1008	4	329
IN	NOBLESVILLE	1007	1	48
IN	NOBLESVILLE	1007	2	45
IN	NOBLESVILLE	1007	3	45
IN	RICHMOND	7335	—RCT1	5
IN	RICHMOND	7335	—RCT2	5
IN	TANNERS CREEK	988	U1	297
IN	TANNERS CREEK	988	U2	235
IN	TANNERS CREEK	988	U3	387
IN	TANNERS CREEK	988	U4	906
IN	WHITEWATER VALLEY	1040	1	74
IN	WHITEWATER VALLEY	1040	2	173
KY	BIG SANDY	1353	BSU1	565
KY	BIG SANDY	1353	BSU2	1,741
KY	CANE RUN	1363	4	397
KY	CANE RUN	1363	5	332
KY	CANE RUN	1363	6	430
KY	COOPER	1384	1	183
KY	COOPER	1384	2	367
KY	DALE	1385	3	161
KY	DALE	1385	4	158
KY	E W BROWN	1355	1	193
KY	E W BROWN	1355	10	37
KY	E W BROWN	1355	2	317
KY	E W BROWN	1355	3	863
KY	E W BROWN	1355	8	34
KY	E W BROWN	1355	9	34
KY	E.W. BROWN	1355	11	21
KY	EAST BEND	6018	2	1,413
KY	GHENT	1356	1	1,232
KY	GHENT	1356	2	1,081
KY	GHENT	1356	3	1,104
KY	GHENT	1356	4	1,132
KY	H L SPURLOCK	6041	1	697
KY	H L SPURLOCK	6041	2	1,589
KY	MILL CREEK	1364	1	528
KY	MILL CREEK	1364	2	600
KY	MILL CREEK	1364	3	941
KY	MILL CREEK	1364	4	1,096
KY	PADDY'S RUN	1366	12	8
KY	PINEVILLE	1360	3	67
KY	TRIMBLE COUNTY	6071	1	1,221
KY	TYRONE	1361	1	3

ST	Plant	Plant_id	Point_id	NO_X allocation for EGUs
KY	TYRONE	1361	2	3
KY	TYRONE	1361	3	3
KY	TYRONE	1361	4	3
KY	TYRONE	1361	5	117
MD	BRANDON SHORES	602	1	1,827
MD	BRANDON SHORES	602	2	1,713
MD	C P CRANE	1552	1	434
MD	C P CRANE	1552	2	463
MD	CHALK POINT	1571	—GT2	1
MD	CHALK POINT	1571	—GT3	36
MD	CHALK POINT	1571	—GT4	39
MD	CHALK POINT	1571	—GT5	55
MD	CHALK POINT	1571	—GT6	60
MD	CHALK POINT	1571	—SGT1	24
MD	CHALK POINT	1571	1	833
MD	CHALK POINT	1571	2	861
MD	CHALK POINT	1571	3	585
MD	CHALK POINT	1571	4	522
MD	DICKERSON	1572	—GT2	36
MD	DICKERSON	1572	—GT3	66
MD	DICKERSON	1572	1	447
MD	DICKERSON	1572	2	441
MD	DICKERSON	1572	3	481
MD	GOULD STREET	1553	3	81
MD	HERBERT A WAGNER	1554	1	134
MD	HERBERT A WAGNER	1554	2	399
MD	HERBERT A WAGNER	1554	3	723
MD	HERBERT A WAGNER	1554	4	301
MD	MORGANTOWN	1573	—GT3	9
MD	MORGANTOWN	1573	—GT4	9
MD	MORGANTOWN	1573	—GT5	9
MD	MORGANTOWN	1573	—GT6	8
MD	MORGANTOWN	1573	1	1,151
MD	MORGANTOWN	1573	2	1,375
MD	PANDA BRANDYWINE	54832	1	95
MD	PANDA BRANDYWINE	54832	2	84
MD	PERRYMAN	1556	**51	56
MD	PERRYMAN	1556	—GT1	8
MD	PERRYMAN	1556	—GT2	9
MD	PERRYMAN	1556	—GT3	6
MD	PERRYMAN	1556	—GT4	10
MD	R P SMITH	1570	11	143
MD	R P SMITH	1570	9	11
MD	RIVERSIDE	1559	—GT6	11
MD	RIVERSIDE	1559	4	40
MD	VIENNA	1564	8	169
MD	WESTPORT	1560	—GT5	28
MI	ADA COGEN LTD	10819	CA_Ltd	23
MI	BELLE RIVER	6034	1	1,589
MI	BELLE RIVER	6034	2	1,672
MI	DAN E KARN	1702	1	552
MI	DAN E KARN	1702	2	530
MI	DAN E KARN	1702	3	288
MI	DAN E KARN	1702	4	310
MI	ECKERT STATION	1831	1	52
MI	ECKERT STATION	1831	2	47
MI	ECKERT STATION	1831	3	65
MI	ECKERT STATION	1831	4	116
MI	ECKERT STATION	1831	5	154
MI	ECKERT STATION	1831	6	131
MI	ENDICOTT GENERATING STATION	4259	1	98
MI	ERICKSON	1832	1	381
MI	GREENWOOD	6035	1	373
MI	HANCOCK	1730	5	3
MI	HANCOCK	1730	6	3
MI	HARBOR BEACH	1731	1	97
MI	J C WEADOCK	1720	7	346
MI	J C WEADOCK	1720	8	342
MI	J R WHITING	1723	1	225
MI	J R WHITING	1723	2	204
MI	J R WHITING	1723	3	249
MI	JAMES DE YOUNG	1830	5	69
MI	MARYSVILLE	1732	10	22

ST	Plant	Plant_id	Point_id	NO_X allocation for EGUs
MI	MARYSVILLE	1732	11	16
MI	MARYSVILLE	1732	12	17
MI	MARYSVILLE	1732	9	17
MI	MIDLAND COGENERATION VENTURE	10745	003	269
MI	MIDLAND COGENERATION VENTURE	10745	004	276
MI	MIDLAND COGENERATION VENTURE	10745	005	271
MI	MIDLAND COGENERATION VENTURE	10745	006	273
MI	MIDLAND COGENERATION VENTURE	10745	007	280
MI	MIDLAND COGENERATION VENTURE	10745	008	277
MI	MIDLAND COGENERATION VENTURE	10745	009	273
MI	MIDLAND COGENERATION VENTURE	10745	010	271
MI	MIDLAND COGENERATION VENTURE	10745	011	274
MI	MIDLAND COGENERATION VENTURE	10745	012	269
MI	MIDLAND COGENERATION VENTURE	10745	013	275
MI	MIDLAND COGENERATION VENTURE	10745	014	269
MI	MISTERSKY	1822	5	33
MI	MISTERSKY	1822	6	155
MI	MISTERSKY	1822	7	98
MI	MONROE	1733	1	1,902
MI	MONROE	1733	2	1,555
MI	MONROE	1733	3	1,574
MI	MONROE	1733	4	1,822
MI	RIVER ROUGE	1740	1	0
MI	RIVER ROUGE	1740	2	627
MI	RIVER ROUGE	1740	3	652
MI	ROUGE POWERHOUSE #1	10272	1	232
MI	ST CLAIR	1743	1	339
MI	ST CLAIR	1743	2	304
MI	ST CLAIR	1743	3	351
MI	ST CLAIR	1743	4	349
MI	ST CLAIR	1743	5	0
MI	ST CLAIR	1743	6	646
MI	ST CLAIR	1743	7	733
MI	TRENTON CHANNEL	1745	16	132
MI	TRENTON CHANNEL	1745	17	124
MI	TRENTON CHANNEL	1745	18	130
MI	TRENTON CHANNEL	1745	19	126
MI	TRENTON CHANNEL	1745	9A	968
MI	WYANDOTTE	1866	5	8
MI	WYANDOTTE	1866	7	81
MI	WYANDOTTE	1866	8	36
NC	ASHEVILLE	2706	1	491
NC	ASHEVILLE	2706	2	479
NC	BELEWS CREEK	8042	1	2,306
NC	BELEWS CREEK	8042	2	2,688
NC	BUCK	2720	5	59
NC	BUCK	2720	6	65
NC	BUCK	2720	7	69
NC	BUCK	2720	8	284
NC	BUCK	2720	9	300
NC	BUTLER WARNER GEN PL	1016	—1	40
NC	BUTLER WARNER GEN PL	1016	—2	40
NC	BUTLER WARNER GEN PL	1016	—3	40
NC	BUTLER WARNER GEN PL	1016	—6	42
NC	BUTLER WARNER GEN PL	1016	—7	40
NC	BUTLER WARNER GEN PL	1016	—8	40
NC	BUTLER WARNER GEN PL	1016	—9	103
NC	CAPE FEAR	2708	5	255
NC	CAPE FEAR	2708	6	361
NC	CLIFFSIDE	2721	1	67
NC	CLIFFSIDE	2721	2	73
NC	CLIFFSIDE	2721	3	95
NC	CLIFFSIDE	2721	4	107
NC	CLIFFSIDE	2721	5	1,180
NC	COGENTRIX–ROCKY MOUNT	50468	ST_unt	303
NC	COGENTRIX ELIZABETHTOWN	10380	ST_OWN	111
NC	COGENTRIX KENANSVILLE	10381	ST_LLE	102
NC	COGENTRIX LUMBERTON	10382	ST_TON	111
NC	COGENTRIX ROXBORO	10379	ST_ORO	166
NC	COGENTRIX SOUTHPORT	10378	ST_ORT	335
NC	DAN RIVER	2723	1	117
NC	DAN RIVER	2723	2	128
NC	DAN RIVER	2723	3	271

ST	Plant	Plant_id	Point_id	NO_X allocation for EGUs
NC	G G ALLEN	2718	1	311
NC	G G ALLEN	2718	2	316
NC	G G ALLEN	2718	3	525
NC	G G ALLEN	2718	4	470
NC	G G ALLEN	2718	5	514
NC	L V SUTTON	2713	1	162
NC	L V SUTTON	2713	2	176
NC	L V SUTTON	2713	3	717
NC	L V SUTTON	2713	CT2B	2
NC	LEE	2709	1	129
NC	LEE	2709	2	142
NC	LEE	2709	3	414
NC	LEE	2709	CT4	1
NC	LINCOLN	7277	1	33
NC	LINCOLN	7277	10	31
NC	LINCOLN	7277	11	33
NC	LINCOLN	7277	12	31
NC	LINCOLN	7277	13	26
NC	LINCOLN	7277	14	26
NC	LINCOLN	7277	15	25
NC	LINCOLN	7277	16	25
NC	LINCOLN	7277	2	33
NC	LINCOLN	7277	3	31
NC	LINCOLN	7277	4	31
NC	LINCOLN	7277	5	29
NC	LINCOLN	7277	6	30
NC	LINCOLN	7277	7	24
NC	LINCOLN	7277	8	25
NC	LINCOLN	7277	9	32
NC	MARSHALL	2727	1	899
NC	MARSHALL	2727	2	940
NC	MARSHALL	2727	3	1,588
NC	MARSHALL	2727	4	1,570
NC	MAYO	6250	1A	893
NC	MAYO	6250	1B	875
NC	PANDA-ROSEMARY	50555	CT_ary	62
NC	PANDA-ROSEMARY	50555	CW_ary	47
NC	RIVERBEND	2732	10	266
NC	RIVERBEND	2732	7	193
NC	RIVERBEND	2732	8	200
NC	RIVERBEND	2732	9	253
NC	ROANOKE VALLEY	50254	1	440
NC	ROANOKE VALLEY	50254	2	140
NC	ROXBORO	2712	1	766
NC	ROXBORO	2712	2	1,426
NC	ROXBORO	2712	3A	792
NC	ROXBORO	2712	3B	785
NC	ROXBORO	2712	4A	778
NC	ROXBORO	2712	4B	733
NC	TOBACCOVILLE	50221	1	53
NC	TOBACCOVILLE	50221	2	53
NC	TOBACCOVILLE	50221	3	53
NC	TOBACCOVILLE	50221	4	53
NC	UNC—CHAPEL HILL	54276	ST_ill	14
NC	W H WEATHERSPOON	2716	1	76
NC	W H WEATHERSPOON	2716	2	86
NC	W H WEATHERSPOON	2716	3	161
NC	W H WEATHERSPOON	2716	CT–1	4
NC	W H WEATHERSPOON	2716	CT–2	3
NC	W H WEATHERSPOON	2716	CT–3	2
NC	W H WEATHERSPOON	2716	CT–4	4
NJ	B L ENGLAND	2378	1	353
NJ	B L ENGLAND	2378	2	417
NJ	B L ENGLAND	2378	3	114
NJ	BAYONNE	50497	1	139
NJ	BAYONNE	50497	2	143
NJ	BAYONNE	50497	3	140
NJ	BERGEN	2398	1101	152
NJ	BERGEN	2398	1201	157
NJ	BERGEN	2398	1301	155
NJ	BERGEN	2398	1401	152
NJ	BURLINGTON	2399	101	30
NJ	BURLINGTON	2399	102	34

ST	Plant	Plant_id	Point_id	NO_X allocation for EGUs
NJ	BURLINGTON	2399	103	39
NJ	BURLINGTON	2399	104	47
NJ	BURLINGTON	2399	11–1	2
NJ	BURLINGTON	2399	11–2	2
NJ	BURLINGTON	2399	11–3	2
NJ	BURLINGTON	2399	11–4	2
NJ	BURLINGTON	2399	7	17
NJ	BURLINGTON	2399	9–1	4
NJ	BURLINGTON	2399	9–2	4
NJ	BURLINGTON	2399	9–3	4
NJ	BURLINGTON	2399	9–4	4
NJ	CAMDEN	10751	1	378
NJ	CARLL'S CORNER STATION	2379	1	2
NJ	CARLL'S CORNER STATION	2379	2	16
NJ	CARNEYS POINT (CCLP) NUG	10566	ST_NUG	527
NJ	CEDAR STATION	2380	1E&W	5
NJ	CUMBERLAND	5083	—GT1	40
NJ	DEEPWATER	2384	1	49
NJ	DEEPWATER	2384	4	5
NJ	DEEPWATER	2384	6	42
NJ	DEEPWATER	2384	8	195
NJ	EDISON	2400	1–1A&B	3
NJ	EDISON	2400	1–2A&B	3
NJ	EDISON	2400	1–3A&B	3
NJ	EDISON	2400	1–4A&B	3
NJ	EDISON	2400	2–1A&B	7
NJ	EDISON	2400	2–2A&B	7
NJ	EDISON	2400	2–3A&B	7
NJ	EDISON	2400	2–4A&B	7
NJ	EDISON	2400	3–1A&B	7
NJ	EDISON	2400	3–2A&B	7
NJ	EDISON	2400	3–3A&B	7
NJ	EDISON	2400	3–4A&B	7
NJ	ESSEX	2401	10–1A&B	10
NJ	ESSEX	2401	10–2A&B	10
NJ	ESSEX	2401	10–3A&B	10
NJ	ESSEX	2401	10–4A&B	10
NJ	ESSEX	2401	11–1A&B	11
NJ	ESSEX	2401	11–2A&B	11
NJ	ESSEX	2401	11–3A&B	11
NJ	ESSEX	2401	11–4A&B	11
NJ	ESSEX	2401	12–1A&B	13
NJ	ESSEX	2401	12–2A&B	13
NJ	ESSEX	2401	12–3A&B	13
NJ	ESSEX	2401	12–4A&B	13
NJ	ESSEX	2401	9	66
NJ	FORKED RIVER	7138	—1	17
NJ	FORKED RIVER	7138	—2	17
NJ	GILBERT	2393	03	47
NJ	GILBERT	2393	04	64
NJ	GILBERT	2393	05	63
NJ	GILBERT	2393	06	61
NJ	GILBERT	2393	07	63
NJ	GILBERT	2393	1	4
NJ	GILBERT	2393	2	4
NJ	GILBERT	2393	CT–9	61
NJ	HUDSON	2403	1	175
NJ	HUDSON	2403	2	884
NJ	HUDSON	2403	3	3
NJ	KEARNY	2404	10	26
NJ	KEARNY	2404	11	34
NJ	KEARNY	2404	12–1	8
NJ	KEARNY	2404	12–2	8
NJ	KEARNY	2404	12–3	8
NJ	KEARNY	2404	12–4	8
NJ	KEARNY	2404	7	35
NJ	KEARNY	2404	8	16
NJ	LINDEN	2406	11	16
NJ	LINDEN	2406	12	11
NJ	LINDEN	2406	13	20
NJ	LINDEN	2406	2	52
NJ	LINDEN	2406	6	2
NJ	LINDEN	2406	7	60

ST	Plant	Plant_id	Point_id	NO_X allocation for EGUs
NJ	LINDEN	2406	8	70
NJ	LINDEN COGEN	50006	100	276
NJ	LINDEN COGEN	50006	200	280
NJ	LINDEN COGEN	50006	300	274
NJ	LINDEN COGEN	50006	400	272
NJ	LINDEN COGEN	50006	500	278
NJ	LOGAN GENERATING PLANT	10043	1	424
NJ	MERCER	2408	1	489
NJ	MERCER	2408	2	558
NJ	MICKELTON	8008	1	28
NJ	MIDDLE ST	2382	3	4
NJ	MILFORD POWER LP	10616	1	44
NJ	MOBIL NUG	n114	CT_NUG	40
NJ	NEWARK BAY COGEN	50385	1	9
NJ	NEWARK BAY COGEN	50385	2	9
NJ	NORTH JERSEY ENERGY ASSOCIATES	10308	1	19
NJ	NORTH JERSEY ENERGY ASSOCIATES	10308	2	19
NJ	O'BRIEN (NEWARK) COGENERATION, INC.	50797	1	8
NJ	O'BRIEN (PARLIN) COGENERATION, INC.	50799	1	8
NJ	O'BRIEN (PARLIN) COGENERATION, INC.	50799	2	8
NJ	PEDRICKTOWN COGEN	10099	1	13
NJ	PRIME ENERGY LP	50852	1	178
NJ	SALEM	2410	3A&B	3
NJ	SAYREVILLE	2390	07	40
NJ	SAYREVILLE	2390	08	51
NJ	SAYREVILLE	2390	C–1	16
NJ	SAYREVILLE	2390	C–2	13
NJ	SAYREVILLE	2390	C–3	11
NJ	SAYREVILLE	2390	C–4	13
NJ	SEWAREN	2411	1	42
NJ	SEWAREN	2411	2	45
NJ	SEWAREN	2411	3	58
NJ	SEWAREN	2411	4	91
NJ	SEWAREN	2411	6	2
NJ	SHERMAN	7288	CT–1	37
NJ	VINELAND VCLP NUG	54807	GT_NUG	40
NJ	WERNER	2385	04	14
NJ	WERNER	2385	C–1	7
NJ	WERNER	2385	C–2	6
NJ	WERNER	2385	C–3	7
NJ	WERNER	2385	C–4	7
NJ	WEST STAT	6776	1	10
NY	59TH STREET	2503	114	41
NY	59TH STREET	2503	115	32
NY	74TH STREET	2504	120	70
NY	74TH STREET	2504	121	80
NY	74TH STREET	2504	122	65
NY	ARTHUR KILL	2490	20	524
NY	ARTHUR KILL	2490	30	380
NY	ASTORIA	8906	30	557
NY	ASTORIA	8906	40	505
NY	ASTORIA	8906	50	561
NY	ASTORIA	8906	GT2–1	9
NY	ASTORIA	8906	GT2–2	9
NY	ASTORIA	8906	GT2–3	9
NY	ASTORIA	8906	GT2–4	9
NY	ASTORIA	8906	GT3–1	9
NY	ASTORIA	8906	GT3–2	9
NY	ASTORIA	8906	GT3–3	9
NY	ASTORIA	8906	GT3–4	9
NY	ASTORIA	8906	GT4–1	9
NY	ASTORIA	8906	GT4–2	9
NY	ASTORIA	8906	GT4–3	9
NY	ASTORIA	8906	GT4–4	9
NY	BOWLINE POINT	2625	1	749
NY	BOWLINE POINT	2625	2	566
NY	BROOKLYN NAVY YARD	54914	1	239
NY	BROOKLYN NAVY YARD	54914	2	220
NY	CHARLES POLETTI	2491	001	883
NY	DANSKAMMER	2480	1	34
NY	DANSKAMMER	2480	2	45
NY	DANSKAMMER	2480	3	229
NY	DANSKAMMER	2480	4	449

ST	Plant	Plant_id	Point_id	NO_X allocation for EGUs
NY	EF BARRETT	2511	10	285
NY	EF BARRETT	2511	20	287
NY	EAST RIVER	2493	50	33
NY	EAST RIVER	2493	60	319
NY	EAST RIVER	2493	70	113
NY	FAR ROCKAWAY	2513	40	138
NY	GLENWOOD	2514	40	151
NY	GLENWOOD	2514	50	124
NY	GLENWOOD	2514	U00020	1
NY	GLENWOOD	2514	U00021	1
NY	HUDSON AVENUE	2496	100	162
NY	LOVETT	2629	3	74
NY	LOVETT	2629	4	304
NY	LOVETT	2629	5	380
NY	NISSEQUOGUE COGEN PARTNERS	4931	1	86
NY	NORTHPORT	2516	1	343
NY	NORTHPORT	2516	2	533
NY	NORTHPORT	2516	3	375
NY	NORTHPORT	2516	4	582
NY	O&R HILLBURN GT	2628	1	2
NY	O&R SHOEMAKER GT	2632	1	10
NY	PORT JEFFERSON	2517	3	270
NY	PORT JEFFERSON	2517	4	253
NY	RAVENSWOOD	2500	10	299
NY	RAVENSWOOD	2500	20	363
NY	RAVENSWOOD	2500	30	1,360
NY	RAVENSWOOD	2500	GT2–1	3
NY	RAVENSWOOD	2500	GT2–2	3
NY	RAVENSWOOD	2500	GT2–3	3
NY	RAVENSWOOD	2500	GT2–4	3
NY	RAVENSWOOD	2500	GT3–1	3
NY	RAVENSWOOD	2500	GT3–2	3
NY	RAVENSWOOD	2500	GT3–3	3
NY	RAVENSWOOD	2500	GT3–4	3
NY	RICHARD M FLYNN	7314	NA1	246
NY	RICHARD M FLYNN	7314	NA2	25
NY	ROSETON	8006	1	479
NY	ROSETON	8006	2	595
NY	TRIGEN–NDEC	52056	4	105
NY	WADING RIVER	7146	1	8
NY	WADING RIVER	7146	2	8
NY	WADING RIVER	7146	3	8
NY	WADING RIVER	7146	UGT013	1
NY	WATERSIDE	2502	61	84
NY	WATERSIDE	2502	62	91
NY	WATERSIDE	2502	80	208
NY	WATERSIDE	2502	90	208
NY	WEST BABYLON	2521	1	2
OH	ASHTABULA	2835	10	75
OH	ASHTABULA	2835	11	80
OH	ASHTABULA	2835	7	333
OH	ASHTABULA	2835	8	70
OH	ASHTABULA	2835	9	66
OH	AVON LAKE	2836	10	139
OH	AVON LAKE	2836	12	1,040
OH	AVON LAKE	2836	9	41
OH	AVON LAKE	2836	CT10	3
OH	BAY SHORE	2878	1	208
OH	BAY SHORE	2878	2	229
OH	BAY SHORE	2878	3	213
OH	BAY SHORE	2878	4	330
OH	CARDINAL	2828	1	1,030
OH	CARDINAL	2828	2	1,083
OH	CARDINAL	2828	3	1,079
OH	CONESVILLE	2840	1	214
OH	CONESVILLE	2840	2	203
OH	CONESVILLE	2840	3	212
OH	CONESVILLE	2840	4	1,119
OH	CONESVILLE	2840	5	731
OH	CONESVILLE	2840	6	736
OH	DICKS CREEK	2831	1	7
OH	EASTLAKE	2837	1	214
OH	EASTLAKE	2837	2	230

ST	Plant	Plant_id	Point_id	NO_X allocation for EGUs
OH	EASTLAKE	2837	3	251
OH	EASTLAKE	2837	4	371
OH	EASTLAKE	2837	5	974
OH	EASTLAKE	2837	6	1
OH	EDGEWATER	2857	13	65
OH	EDGEWATER	2857	A	1
OH	EDGEWATER	2857	B	1
OH	FRANK M TAIT	2847	GT1	23
OH	FRANK M TAIT	2847	GT2	25
OH	GEN J M GAVIN	8102	1	2,744
OH	GEN J M GAVIN	8102	2	2,981
OH	HAMILTON	2917	9	110
OH	J M STUART	2850	1	1,054
OH	J M STUART	2850	2	1,228
OH	J M STUART	2850	3	1,074
OH	J M STUART	2850	4	1,106
OH	KILLEN STATION	6031	2	1,706
OH	KYGER CREEK	2876	1	471
OH	KYGER CREEK	2876	2	471
OH	KYGER CREEK	2876	3	478
OH	KYGER CREEK	2876	4	465
OH	KYGER CREEK	2876	5	455
OH	LAKE SHORE	2838	18	195
OH	MAD RIVER	2860	A	2
OH	MAD RIVER	2860	B	2
OH	MIAMI FORT	2832	5–1	35
OH	MIAMI FORT	2832	5–2	35
OH	MIAMI FORT	2832	6	398
OH	MIAMI FORT	2832	7	1,044
OH	MIAMI FORT	2832	8	1,015
OH	MIAMI FORT	2832	CT2	1
OH	MUSKINGUM RIVER	2872	1	309
OH	MUSKINGUM RIVER	2872	2	316
OH	MUSKINGUM RIVER	2872	3	347
OH	MUSKINGUM RIVER	2872	4	349
OH	MUSKINGUM RIVER	2872	5	1,105
OH	NILES	2861	1	212
OH	NILES	2861	2	160
OH	NILES	2861	A	2
OH	O H HUTCHINGS	2848	H–1	24
OH	O H HUTCHING	2848	H–2	37
OH	O H HUTCHINGS	2848	H–3	64
OH	O H HUTCHINGS	2848	H–4	68
OH	O H HUTCHINGS	2848	H–5	62
OH	O H HUTCHINGS	2848	H–6	69
OH	O H HUTCHINGS	2848	H–7	1
OH	PICWAY	2843	9	141
OH	R E BURGER	2864	1	0
OH	R E BURGER	2864	2	0
OH	R E BURGER	2864	3	0
OH	R E BURGER	2864	4	0
OH	R E BURGER	2864	5	14
OH	R E BURGER	2864	6	13
OH	R E BURGER	2864	7	337
OH	R E BURGER	2864	8	274
OH	RICHARD GORSUCH	7286	1	146
OH	RICHARD GORSUCH	7286	2	138
OH	RICHARD GORSUCH	7286	3	144
OH	RICHARD GORSUCH	7286	4	146
OH	W H SAMMIS	2866	1	402
OH	W H SAMMIS	2866	2	418
OH	W H SAMMIS	2866	3	400
OH	W H SAMMIS	2866	4	415
OH	W H SAMMIS	2866	5	631
OH	W H SAMMIS	2866	6	1,221
OH	W H SAMMIS	2866	7	1,259
OH	W H ZIMMER	6019	1	2,918
OH	WALTER C BECKJORD	2830	1	167
OH	WALTER C BECKJORD	2830	2	198
OH	WALTER C BECKJORD	2830	3	281
OH	WALTER C BECKJORD	2830	4	347
OH	WALTER C BECKJORD	2830	5	481
OH	WALTER C BECKJORD	2830	6	850

ST	Plant	Plant_id	Point_id	NO_X allocation for EGUs
OH	WALTER C BECKJORD	2830	CT1	3
OH	WALTER C BECKJORD	2830	CT2	3
OH	WALTER C BECKJORD	2830	CT3	4
OH	WALTER C BECKJORD	2830	CT4	2
OH	WEST LORAIN	2869	1A	0
OH	WEST LORAIN	2869	1B	0
OH	WOODSDALE	7158	—GT1	30
OH	WOODSDALE	7158	—GT2	30
OH	WOODSDALE	7158	—GT3	39
OH	WOODSDALE	7158	—GT4	37
OH	WOODSDALE	7158	—GT5	40
OH	WOODSDALE	7158	—GT6	39
PA	AES BEAVER VALLEY	10676	032	144
PA	AES BEAVER VALLEY	10676	033	131
PA	AES BEAVER VALLEY	10676	034	133
PA	AES BEAVER VALLEY	10676	035	67
PA	ARMSTRONG	3178	1	363
PA	ARMSTRONG	3178	2	383
PA	BRUCE MANSFIELD	6094	1	1,657
PA	BRUCE MANSFIELD	6094	2	1,672
PA	BRUCE MANSFIELD	6094	3	1,636
PA	BRUNNER ISLAND	3140	1	568
PA	BRUNNER ISLAND	3140	2	718
PA	BRUNNER ISLAND	3140	3	1,539
PA	BRUNOT ISLAND	3096	2A	0
PA	BRUNOT ISLAND	3096	2B	0
PA	BRUNOT ISLAND	3096	3	0
PA	CAMBRIA COGEN	10641	1	155
PA	CAMBRIA COGEN	10641	2	161
PA	CHESWICK	8226	1	1,119
PA	COLVER POWER PROJECT	10143	1	291
PA	CONEMAUGH	3118	1	2,167
PA	CONEMAUGH	3118	2	1,995
PA	CROMBY	3159	1	377
PA	CROMBY	3159	2	201
PA	DELAWARE	3160	71	61
PA	DELAWARE	3160	81	56
PA	EBENSBURG POWER	10603	1	191
PA	EDDYSTONE	3161	1	565
PA	EDDYSTONE	3161	2	636
PA	EDDYSTONE	3161	3	207
PA	EDDYSTONE	3161	4	237
PA	ELRAMA	3098	1	214
PA	ELRAMA	3098	2	209
PA	ELRAMA	3098	3	208
PA	ELRAMA	3098	4	428
PA	FOSTER WHEELER MT. CARMEL	10343	AB_NUG	152
PA	GILBERTON POWER NUG	010113	AB_NUG	273
PA	GPU GENCO WAYNE	3134	1	8
PA	HATFIELD'S FERRY	3179	1	1,155
PA	HATFIELD'S FERRY	3179	2	1,029
PA	HATFIELD'S FERRY	3179	3	1,087
PA	HOLTWOOD	3145	17	246
PA	HOMER CITY	3122	1	1,471
PA	HOMER CITY	3122	2	1,553
PA	HOMER CITY	3122	3	1,437
PA	HUNLOCK PWR STATION	3176	6	131
PA	KEYSTONE	3136	1	2,154
PA	KEYSTONE	3136	2	2,133
PA	KIMBERLY-CLARK	3157	10	211
PA	MARTINS CREEK	3148	1	314
PA	MARTINS CREEK	3148	2	293
PA	MARTINS CREEK	3148	3	543
PA	MARTINS CREEK	3148	4	500
PA	MITCHELL	3181	1	10
PA	MITCHELL	3181	2	6
PA	MITCHELL	3181	3	9
PA	MITCHELL	3181	33	556
PA	MONTOUR	3149	1	1,560
PA	MONTOUR	3149	2	1,673
PA	MOUNTAIN	3111	1	5
PA	MOUNTAIN	3111	2	5
PA	NEW CASTLE	3138	3	190

ST	Plant	Plant_id	Point_id	NO_X allocation for EGUs
PA	NEW CASTLE	3138	4	195
PA	NEW CASTLE	3138	5	245
PA	NORCON POWER PARTNERS LP	54571	1	103
PA	NORCON POWER PARTNERS LP	54571	2	109
PA	NORTHAMPTION GENERATING	50888	1	291
PA	NORTHEASTERN POWER	50039		188
PA	PANTHER CREEK	50776	1	134
PA	PANTHER CREEK	50776	2	130
PA	PECO ENERGY CROYDEN	8012	11	11
PA	PECO ENERGY CROYDEN	8012	12	9
PA	PECO ENERGY CROYDEN	8012	21	5
PA	PECO ENERGY CROYDEN	8012	22	11
PA	PECO ENERGY CROYDEN	8012	31	13
PA	PECO ENERGY CROYDEN	8012	32	6
PA	PECO ENERGY CROYDEN	8012	41	11
PA	PECO ENERGY CROYDEN	8012	42	9
PA	PECO ENERGY RICHMOND	3168	91	10
PA	PECO ENERGY RICHMOND	3168	92	9
PA	PHILLIPS POWER STATION	3099	3	0
PA	PHILLIPS POWER STATION	3099	4	0
PA	PHILLIPS POWER STATION	3099	5	0
PA	PHILLIPS POWER STATION	3099	6	0
PA	PINEY CREEK	54144	1	102
PA	PORTLAND	3113	—5	48
PA	PORTLAND	3113	1	266
PA	PORTLAND	3113	2	412
PA	SCHUYLKILL	3169	1	84
PA	SCHUYLKILL ENERGY RESOURCES	880010	1	289
PA	SCHUYLKILL STATION (TURBI	50607	AB_NUG	701
PA	SCRUBGRASS GENERATING PLANT	50974	1	124
PA	SCRUBGRASS GENERATING PLANT	50974	2	123
PA	SEWARD	3130	12	64
PA	SEWARD	3130	14	72
PA	SEWARD	3130	15	355
PA	SHAWVILLE	3131	1	295
PA	SHAWVILLE	3131	2	294
PA	SHAWVILLE	3131	3	380
PA	SHAWVILLE	3131	4	392
PA	SUNBURY	3152	1A	134
PA	SUNBURY	3152	1B	122
PA	SUNBURY	3152	2A	130
PA	SUNBURY	3152	2B	134
PA	SUNBURY	3152	3	263
PA	SUNBURY	3152	4	302
PA	TITUS	3115	1	161
PA	TITUS	3115	2	152
PA	TITUS	3115	3	151
PA	TOLNA	3116	1	3
PA	TOLNA	3116	2	4
PA	TRIGEN ENERGY SANSOM	880006	1	12
PA	TRIGEN ENERGY SANSOM	880006	2	10
PA	TRIGEN ENERGY SANSOM	880006	3	5
PA	TRIGEN ENERGY SANSOM	880006	4	6
PA	WARREN	3132	1	47
PA	WARREN	3132	2	32
PA	WARREN	3132	3	40
PA	WARREN	3132	4	42
PA	WARREN	3132	CT1	14
PA	WESTWOOD ENERGY PROPERTIE	50611	031	98
PA	WHEELABRATOR FRACKVILLE E	50879	GEN1	161
PA	WILLIAMS GEN—HAZELTON	10870	HRSG	16
PA	WILLIAMS GEN—HAZELTON	10870	TURBN	141
VA	BELLMEADE	7696	1	76
VA	BELLMEADE	7696	2	88
VA	BREMO BLUFF	3796	3	137
VA	BREMO BLUFF	3796	4	386
VA	CHESAPEAKE	3803	1	298
VA	CHESAPEAKE	3803	2	308
VA	CHESAPEAKE	3803	3	370
VA	CHESAPEAKE	3803	4	571
VA	CHESAPEAKE CORP.	10017	ST_rp.	59
VA	CHESTERFIELD	3797	—8	263
VA	CHESTERFIELD	3797	3	232

ST	Plant	Plant_id	Point_id	NO_X allocation for EGUs
VA	CHESTERFIELD	3797	4	389
VA	CHESTERFIELD	3797	5	769
VA	CHESTERFIELD	3797	6	1,348
VA	CHESTERFIELD	3797	7	316
VA	CLINCH RIVER	3775	1	548
VA	CLINCH RIVER	3775	2	520
VA	CLINCH RIVER	3775	3	575
VA	CLOVER	7213	1	1,033
VA	CLOVER	7213	2	1,118
VA	COGENTRIX—HOPEWELL	10377	ST_ell	327
VA	COGENTRIX—PORTSMOUTH	10071	ST_uth	356
VA	COGENTRIX RICHMOND 1	54081	ST_d 1	299
VA	COGENTRIX RICHMOND 2	54081	ST_d 2	209
VA	COMMONWEALTH ATLANTIC LP	52087	GT_LP	35
VA	DARBYTOWN	7212	—1	29
VA	DARBYTOWN	7212	—2	28
VA	DARBYTOWN	7212	—3	30
VA	DARBYTOWN	7212	—4	29
VA	DOSWELL #1	52019	CA_#1	46
VA	DOSWELL #1	52019	CT_#1	94
VA	DOSWELL #2	52019	CA_#2	46
VA	DOSWELL #2	52019	CT_#2	94
VA	GLEN LYN	3776	51	101
VA	GLEN LYN	3776	52	110
VA	GLEN LYN	3776	6	487
VA	GORDONSVILLE 1	54844	CA_e 1	16
VA	GORDONSVILLE 1	54844	CT_e 1	33
VA	GORDONSVILLE 2	54844	CA_Xe 2	17
VA	GORDONSVILLE 2	54844	CT_e 2	34
VA	GRAVEL NECK	7032	—3	21
VA	GRAVEL NECK	7032	—X4	24
VA	GRAVEL NECK	7032	—5	14
VA	GRAVEL NECK	7032	—6	18
VA	HOPEWELL COGEN, INC.	10633	CT_nc.	102 OW≤
VA	HOPEWELL COGEN, INC.	10633	CW_nc.	53
VA	LG&E-WESTMORELAND ALTAVISTA	10773	1	18
VA	LG&E-WESTMORELAND ALTAVISTA	10773	2	18
VA	LG&E-WESTMORELAND HOPEWELL	10771	1	17
VA	LG&E-WESTMORELAND HOPEWELL	10771	2	16
VA	LG&E-WESTMORELAND SOUTHAMPTON	10774	1	23
VA	LG&E-WESTMORELAND SOUTHAMPTON	10774	2	29
VA	MECKLENBURG	52007	ST_urg	234
VA	POSSUM POINT	3804	3	221
VA	POSSUM POINT	3804	4	528
VA	POSSUM POINT	3804	5	322
VA	POTOMAC RIVER	3788	1	203
VA	POTOMAC RIVER	3788	2	139
VA	POTOMAC RIVER	3788	3	232
VA	POTOMAC RIVER	3788	4	223
VA	POTOMAC RIVER	3788	5	222
VA	SEI BIRCHWOOD	12	1	305
VA	TASLEY	3785	10	6
VA	YORKTOWN	3809	1	386
VA	YORKTOWN	3809	2	419
VA	YORKTOWN	3809	3	764
WV	ALBRIGHT	3942	1	76
WV	ALBRIGHT	3942	2	71
WV	ALBRIGHT	3942	3	241
WV	FORT MARTIN	3943	1	887
WV	FORT MARTIN	3943	2	868
WV	GRANT TOWN	10151	ST_own	156
WV	HARRISON	3944	1	1,385
WV	HARRISON	3944	2	1,444
WV	HARRISON	3944	3	1,505
WV	JOHN E AMOS	3935	1	1,254
WV	JOHN E AMOS	3935	2	1,198
WV	JOHN E AMOS	3935	3	1,859
WV	KAMMER	3947	1	399
WV	KAMMER	3947	2	418
WV	KAMMER	3947	3	447
WV	KANAWHA RIVER	3936	1	336
WV	KANAWHA RIVER	3936	2	323
WV	MITCHELL	3948	1	1,288

ST	Plant	Plant_id	Point_id	NO_X allocation for EGUs
WV	MITCHELL	3948	2	1,191
WV	MORGANTOWN ENERGY ASSOCIATES	27	1	80
WV	MORGANTOWN ENERGY ASSOCIATES	27	2	80
WV	MOUNTAINEER (1301)	6264	1	1,952
WV	MT STORM	3954	1	1,048
WV	MT STORM	3954	2	1,127
WV	MT STORM	3954	3	1,236
WV	NORTH BRANCH	7537	1A	51
WV	NORTH BRANCH	7537	1B	53
WV	PHIL SPORN	3938	11	239
WV	PHIL SPORN	3938	21	215
WV	PHIL SPORN	3938	31	239
WV	PHIL SPORN	3938	41	230
WV	PHIL SPORN	3938	51	708
WV	PLEASANTS	6004	1	1,296
WV	PLEASANTS	6004	2	1,165
WV	RIVESVILLE	3945	7	38
WV	RIVESVILLE	3945	8	88
WV	WILLOW ISLAND	3946	1	79
WV	WILLOW ISLAND	3946	2	246

[65 FR 2727, Jan. 18, 2000, as amended at 66 FR 48575, Sept. 21, 2001]

APPENDIX B TO PART 97—FINAL SECTION 126 RULE: NON-EGU ALLOCATIONS, 2004–2007

State	County	Plant	Plant ID	Point ID	NO_X allocation for non-EGUs
DC	Washington	GSA CENTRAL HEATING PLANT	0025	003	0
DC	Washington	GSA CENTRAL HEATING PLANT	0025	004	0
DC	Washington	GSA CENTRAL HEATING PLANT	0025	005	0
DC	Washington	GSA CENTRAL HEATING PLANT	0025	006	0
DC	Washington	GSA WEST HEATING PLANT	0024	003	13
DC	Washington	GSA WEST HEATING PLANT	0024	005	12
DE	Kent	KRAFT FOODS INC	0007	001	0
DE	New Castle	MOTIVA ENTERPRISES (FORMERLY STAR ENTERPRISE, DELAWARE CITY PLANT).	0016	002	102
DE	New Castle	MOTIVA ENTERPRISES (FORMERLY STAR ENTERPRISE, DELAWARE CITY PLANT).	0016	012	118
KY	Boyd	ASHLAND OIL INC	0004	061	23
KY	Lawrence	KENTUCKY POWER CO	0003	004	0
MD	Baltimore	BETHLEHEM STEEL	0147	016	75
MD	Baltimore	BETHLEHEM STEEL	0147	017	75
MD	Baltimore	BETHLEHEM STEEL	0147	018	75
MD	Baltimore	BETHLEHEM STEEL	0147	019	75
MD	Allegany	WESTVACO	0011	001	289
MD	Allegany	WESTVACO	0011	002	373
MI	Wayne	DETROIT EDISON CO	B2810	0003	31
MI	Midland	DOW CHEMICAL USA	A4033	0401	6
MI	Midland	DOW CHEMICAL USA	A4033	0402	0
MI	Wayne	DSC LTD	B3680	0006	30
MI	Genesee	GENERAL MOTORS CORP	A1178	0501	63
MI	Genesee	GENERAL MOTORS CORP	A1178	0502	47
MI	Oakland	GENERAL MOTORS CORP	B4031	0506	22
MI	Genesee	GENERAL MOTORS CORP	A1178	0507	20
MI	Oakland	GENERAL MOTORS CORP	B4032	0510	4
MI	Kalamazoo	GEORGIA PACIFIC CORP	B4209	0005	6
MI	Kalamazoo	JAMES RIVER PAPER CO INC	B1678	0003	90
MI	Wayne	MARATHON OIL COMPANY	A9831	0001	109
MI	Allegan	MENASHA CORP	A0023	0024	71
MI	Allegan	MENASHA CORP	A0023	0025	69
MI	Ingham	MICHIGAN STATE UNIVERSITY	K3249	0053	110
MI	Ingham	MICHIGAN STATE UNIVERSITY	K3249	0054	118
MI	Ingham	MICHIGAN STATE UNIVERSITY	K3249	0055	77
MI	Ingham	MICHIGAN STATE UNIVERSITY	K3249	0056	73
MI	Washtenaw	THE REGENTS OF THE UNIVERSITY OF MICHIGAN.	M0675	0001	40
MI	Washtenaw	THE REGENTS OF THE UNIVERSITY OF MICHIGAN.	M0675	0002	37
MI	Oakland	WILLIAM BEAUMONT HOSPITAL	G5067	0010	0
MI	Oakland	WILLIAM BEAUMONT HOSPITAL	G5067	0011	0
NC	Haywood	BLUE RIDGE PAPER PRODUCTS INC	0159	005	129
NC	Haywood	CHAMPION INT CORP	0159	001	98
NC	Haywood	CHAMPION INT CORP	0159	002	88
NC	Haywood	CHAMPION INT CORP	0159	003	200
NC	Haywood	CHAMPION INT CORP	0159	004	176

State	County	Plant	Plant ID	Point ID	NO_X allocation for non-EGUs
NC	Halifax	CHAMPION INTERNATIONAL CORP. ROANOKE RAP.	0007	001	340
NC	Guilford	CONE MILLS CORP—WHITE OAK PLANT	0863	004	50
NC	Cabarrus	FIELDCREST—CANNON PLT 1 KANNAPOLIS.	0006	001	77
NC	Columbus	INTERNATIONAL PAPER: RIEGELWOOD	0036	003	90
NC	Columbus	INTERNATIONAL PAPER: RIEGELWOOD	0036	004	228
NC	Craven	WEYERHAUSER COMPANY NEW BERN MILL.	0104	005	205
NC	Craven	WEYERHAEUSER COMPANY NEW BERN MILL.	0104	006	72
NC	Martin	WEYERHAEUSER PAPER CO. PLYMOUTH.	0069	001	265
NC	Martin	WEYERHAEUSER COMPANY PLYMOUTH	0069	009	25
NJ	Middlesex	BALL—INCON GLASS PACKAGING	15035	001	46
NJ	Hudson	BEST FOODS CPC INTERNATIONAL I	10003	003	27
NJ	Middlesex	CHEVRON U.S.A., INC	15023	001	17
NJ	Middlesex	CHEVRON U.S.A., INC	15023	043	55
NJ	Gloucester	COASTAL EAGLE POINT OIL COMPAN	55004	001	3
NJ	Gloucester	COASTAL EAGLE POINT OIL COMPAN	55004	038	11
NJ	Gloucester	COASTAL EAGLE POINT OIL COMPAN	55004	039	11
NJ	Gloucester	COASTAL EAGLE POINT OIL COMPAN	55004	040	11
NJ	Gloucester	COASTAL EAGLE POINT OIL COMPAN	55004	064	38
NJ	Gloucester	COASTAL EAGLE POINT OIL COMPAN	55004	123	37
NJ	Middlesex	DEGUSSA CORPORATION-METZ DIVIS	15305	009	15
NJ	Union	EXXON CORPORATION	40003	001	57
NJ	Union	EXXON CORPORATION	40003	007	22
NJ	Union	EXXON CORPORATION	40003	014	98
NJ	Union	EXXON CORPORATION	40003	015	14
NJ	Middlesex	HERCULES INCORPORATED	15017	001	38
NJ	Middlesex	HERCULES INCORPORATED	15017	002	37
NJ	Warren	HOFFMAN LAROCHE INC	85010	034	45
NJ	Mercer	HOMASCTE COMPANY	60018	001	290
NJ	Mercer	HOMASCTE COMPANY	60018	002	312
NJ	Passaic	INTERNATIONAL VEILING CORPORAT	30098	001	22
NJ	Bergen	MALT PRODUCTS CORPORATION	00322	001	27
NJ	Atlantic	MARINA ASSOCIATES	70009	001	330
NJ	Atlantic	MARINA ASSOCIATES	70009	002	329
NJ	Atlantic	MARINA ASSOCIATES	70009	003	990
NJ	Union	MERCK & CO., INC	40009	001	66
NJ	Union	MERCK & CO., INC	40009	002	61
NJ	Union	MERCK & CO., INC	40009	003	56
NJ	Union	MERCK & CO., INC	40009	004	75
NJ	Union	MERCK & CO., INC	40009	005	89
NJ	Union	MERCK & CO., INC	40009	006	103
NJ	Gloucester	MOBIL OIL CORPORATION	55006	001	54
NJ	Gloucester	MOBIL OIL CORPORATION	55006	002	54
NJ	Gloucester	MOBIL OIL CORPORATION	55006	003	54
NJ	Gloucester	MOBIL OIL CORPORATION	55006	004	49
NJ	Gloucester	MOBIL OIL CORPORATION	55006	005	16
NJ	Gloucester	MOBIL OIL CORPORATION	55006	006	105
NJ	Gloucester	MOBIL OIL CORPORATION	55006	027	0

State	County	Plant	Plant ID	Point ID	NO_X allocation for non-EGUs
NJ	Gloucester	MOBIL OIL CORPORATION	55006	270	14
NJ	Monmouth	NESTLE CO., INC., THE	20004	006	13
NJ	Monmouth	NESTLE CO., INC., THE	20004	007	13
NJ	Middlesex	NEW JERSEY STEEL CORPORATION	15076	001	18
NJ	Gloucester	PETROLEUM RECYCLING, INC	55180	020	169
NJ	Atlantic	SCOTT PAPER COMPANY	70011	002	89
NJ	Atlantic	SCOTT PAPER COMPANY	70011	003	75
NJ	Atlantic	SCOTT PAPER COMPANY	70011	004	99
NJ	Mercer	STONY BROOK REGIONAL SEWERAGE	60248	001	55
NJ	Mercer	STONY BROOK REGIONAL SEWERAGE	60248	002	55
NY	Kings	HUDSON AVENUE	2496	B71	19
NY	Kings	HUDSON AVENUE	2496	B72	19
NY	Kings	HUDSON AVENUE	2496	B81	19
NY	Kings	HUDSON AVENUE	2496	B82	19
NY	Queens	RAVENSWOOD–A–HOUSE	CE03	B01	15
NY	Queens	RAVENSWOOD–A–HOUSE	CE03	B02	15
NY	Queens	RAVENSWOOD–A–HOUSE	CE03	B03	21
NY	Queens	RAVENSWOOD–A–HOUSE	CE03	B04	21
OH	Butler	AK STEEL (FORMERLY ARMCO STEEL CO.).	1409010006	P009	66
OH	Butler	AK STEEL (FORMERLY ARMCO STEEL CO.).	1409010006	P010	66
OH	Butler	AK STEEL (FORMERLY ARMCO STEEL CO.).	1409010006	P011	66
OH	Butler	AK STEEL (FORMERLY ARMCO STEEL CO.).	1409010006	P012	66
OH	Stark	ASHLAND PETROLEUM COMPANY	1576000301	B015	18
OH	Lucas	BP OIL COMPANY, TOLEDO REFINERY	0448020007	B004	39
OH	Lucas	BP OIL COMPANY, TOLEDO REFINERY	0448020007	B020	102
OH	Montgomery	CARGILL INCORPORATED	0857041124	B004	133
OH	Montgomery	CARGILL INCORPORATED	0857041124	B006	1
OH	Butler	CHAMPION INTERNATIONAL CORP	1409040212	B010	267
OH	Summit	GOODYEAR TIRE & RUBBER COMPANY	1677010193	B001	101
OH	Summit	GOODYEAR TIRE & RUBBER COMPANY	1677010193	B002	108
OH	Hamilton	HENKEL CORP.—EMERY GROUP	1431070035	B027	209
OH	Cuyahoga	LTV STEEL COMPANY, INC	1318001613	B001	139
OH	Cuyahoga	LTV STEEL COMPANY, INC	1318001613	B002	150
OH	Cuyahoga	LTV STEEL COMPANY, INC	1318001613	B003	159
OH	Cuyahoga	LTV STEEL COMPANY, INC	1318001613	B004	158
OH	Cuyahoga	LTV STEEL COMPANY, INC	1318001613	B007	155
OH	Cuyahoga	LTV STEEL COMPANY, INC	1318001613	B905	14
OH	Ross	MEAD CORPORATION	0671010028	B001	185
OH	Ross	MEAD CORPORATION	0671010028	B002	208
OH	Ross	MEAD CORPORATION	0671010028	B003	251
OH	Scioto	NEW BOSTON COKE CORP	0773010004	B008	20
OH	Scioto	NEW BOSTON COKE CORP	0773010004	B009	15
OH	Hamilton	PROCTER & GAMBLE CO	1431390903	B021	72
OH	Hamilton	PROCTER & GAMBLE CO	1431390903	B022	296
OH	Lorain	REPUBLIC ENGINEERED STEELS, INC. (FORMERLY USS/KOBE STEEL—LORAIN WORKS).	0247080229	B013	159
OH	Lawrence	SOUTH POINT ETHANOL	0744000009	B003	107
OH	Lawrence	SOUTH POINT ETHANOL	0744000009	B004	107
OH	Lawrence	SOUTH POINT ETHANOL	0744000009	B007	107
OH	Lucas	SUN REFINING & MARKETING CO, TOLEDO REF.	0448010246	B044	47

State	County	Plant	Plant ID	Point ID	NO_X allocation for non-EGUs
OH	Lucas	SUN REFINING & MARKETING CO, TOLEDO REF.	0448010246	B046	34
OH	Lucas	SUN REFINING & MARKETING CO, TOLEDO REF.	0448010246	B047	18
OH	Trumbull	W C I STEEL, INC	0278000463	B001	113
OH	Trumbull	W C I STEEL, INC	0278000463	B004	142
PA	Northampton	BETHLEHEM STEEL CORP	0048	041	100
PA	Northampton	BETHLEHEM STEEL CORP	0048	042	66
PA	Northampton	BETHLEHEM STEEL CORP	0048	067	165
PA	Armstrong	BMG ASPHALT CO	0004	101	0
PA	Erie	GENERAL ELECTRIC	0009	032	16
PA	York	GLATFELTER, P. H. CO	0016	031	0
PA	York	GLATFELTER, P. H. CO	0016	034	137
PA	York	GLATFELTER, P. H. CO	0016	035	112
PA	York	GLATFELTER, P. H. CO	0016	036	211
PA	Clinton	INTERNATIONAL PAPER: LOCKHAVEN	0008	033	101
PA	Clinton	INTERNATIONAL PAPER: LOCKHAVEN	0008	034	90
PA	Delaware	KIMBERLY CLARK (FORMERLY SCOTT PAPER CO.).	0016	034	1
PA	Delaware	KIMBERLY CLARK (FORMERLY SCOTT PAPER CO.).	0016	035	345
PA	Allegheny	LTV STEEL COMPANY—PITTSBURGH WORKS.	0022	015	25
PA	Allegheny	LTV STEEL COMPANY—PITTSBURGH WORKS.	0022	017	15
PA	Allegheny	LTV STEEL COMPANY—PITTSBURGH WORKS.	0022	019	29
PA	Allegheny	LTV STEEL COMPANY—PITTSBURGH WORKS.	0022	021	55
PA	Montgomery	MERCK SHARP & DOHME	0028	039	126
PA	Westmoreland	MONESSEN INC	0007	031	0
PA	Bucks	PECO	0055	043	15
PA	Bucks	PECO	0055	045	32
PA	Bucks	PECO	0055	044	77
PA	Wyoming	PROCTER & GAMBLE CO	0009	035	187
PA	Allegheny	SHENANGO IRON & COKE WORKS	0050	006	18
PA	Allegheny	SHENANGO IRON & COKE WORKS	0050	009	15
PA	Delaware	SUN REFINING & MARKETING CO	0025	089	102
PA	Delaware	SUN REFINING & MARKETING CO	0025	090	163
PA	Philadelphia	SUN REFINING AND MARKETING 1 O	1501	020	49
PA	Philadelphia	SUN REFINING AND MARKETING 1 O	1501	021	83
PA	Philadelphia	SUN REFINING AND MARKETING 1 O	1501	022	105
PA	Philadelphia	SUN REFINING AND MARKETING 1 O	1501	023	127
PA	Philadelphia	SUNOCO (FORMERLY ALLIED CHEMICAL CORP).	1551	052	86
PA	Perry	TEXAS EASTERN GAS PIPELINE COMPANY.	0001	031	0
PA	Berks	TEXAS EASTERN GAS PIPELINE COMPANY.	0087	031	98
PA	Delaware	TOSCO REFINING (FORMERLY BP OIL, INC.).	0030	032	71
PA	Delaware	TOSCO REFINING (FORMERLY BP OIL, INC.).	0030	033	80
PA	Philadelphia	U.S. NAVAL BASE	9702	016	0
PA	Philadelphia	U.S. NAVAL BASE	9702	017	1
PA	Philadelphia	U.S. NAVAL BASE	9702	098	0
PA	Philadelphia	U.S. NAVAL BASE	9702	099	0
PA	Elk	WILLAMETTE INDUSTRIES (FORMERLY PENNTECH PAPERS, INC.	0005	040	90
PA	Elk	WILLAMETTE INDUSTRIES (FORMERLY PENNTECH PAPERS, INC.	0005	041	89
PA	Beaver	ZINC CORPORATION OF AMERICA	0032	034	176

State	County	Plant	Plant ID	Point ID	NO_X allocation for non-EGUs
PA	Beaver	ZINC CORPORATION OF AMERICA	0032	035	180
VA	Hopewell	ALLIED-SIGNAL INC	0026	002	499
VA	York	AMOCO OIL CO	0004	001	25
VA	Giles	CELANESE ACETATE LLC (FORMERLY HOECHST CELANESE CORP).	0004	007	148
VA	Giles	CELANESE ACETATE LLC (FORMERLY HOECHST CELANESE CORP).	0004	014	56
VA	Pittsylvania	DAN RIVER INC. (SCHOOLFIELD DIV)	0002	003	49
VA	Bedford	GEORGIA–PACIFIC—BIG ISLAND MILL	0003	002	86
VA	Isle Of Wight	INTERNATIONAL PAPER—FRANKLIN (FORMERLY UNION CAMP CORP/FINE PAPER DIV).	0006	003	272
VA	Hopewell	JAMES RIVER COGENERATION (COGE	0055	001	511
VA	Hopewell	JAMES RIVER COGENERATION (COGE	0055	002	512
VA	King William	ST. LAURENT PAPER PRODUCTS CORP.	0001	003	253
VA	Alleghany	WESTVACO CORP	0003	001	253
VA	Alleghany	WESTVACO CORP	0003	002	130
VA	Alleghany	WESTVACO CORP	0003	003	195
VA	Alleghany	WESTVACO CORP	0003	004	373
VA	Alleghany	WESTVACO CORP	0003	005	170
VA	Alleghany	WESTVACO CORP	0003	011	105
WV	Kanawha	AVENTIS CROPSCIENCE	00007	010	113
WV	Kanawha	AVENTIS CROPSCIENCE	00007	011	102
WV	Kanawha	AVENTIS CROPSCIENCE	00007	012	105
WV	Kanawha	DUPONT—BELLE	00001	612	54
WV	Fayette	ELKEM METALS COMPANY L.P.—ALLOY P PLANT.	00001	006	116
WV	Marshall	PPG INDUSTRIES, INC	00002	001	195
WV	Marshall	PPG INDUSTRIES, INC	00002	003	419
WV	Kanawha	RHONE-POLUENC	00007	070	8
WV	Kanawha	RHONE-POLUENC	00007	071	73
WV	Kanawha	RHONE-POLUENC	00007	080	7
WV	Kanawha	RHONE-POLUENC	00007	081	66
WV	Kanawha	RHONE-POLUENC	00007	090	8
WV	Kanawha	RHONE-POLUENC	00007	091	68
WV	Kanawha	UNION CARBIDE—SOUTH CHARLESTON PLANT.	00003	0B6	66
WV	Kanawha	UNION CARBIDE—SOUTH CHARLESTON PLANT.	0003	0B6	92
WV	Kanawha	UNION CARBIDE—SOUTH CHARLESTON PLANT.	0003	0B7	45
WV	Hancock	WEIRTON STEEL CORPORATION	00001	030	31
WV	Hancock	WEIRTON STEEL CORPORATION	00001	088	30
WV	Hancock	WEIRTON STEEL CORPORATION	00001	089	2
WV	Hancock	WEIRTON STEEL CORPORATION	00001	090	110
WV	Hancock	WEIRTON STEEL CORPORATION	00001	091	253
WV	Hancock	WEIRTON STEEL CORPORATION	00001	092	208
WV	Hancock	WEIRTON STEEL CORPORATION	00001	093	200

[65 FR 2727, Jan. 18, 2000, as amended at 66 FR 48576, Sept. 21, 2001]

APPENDIX C TO PART 97—FINAL SECTION 126 RULE: TRADING BUDGET

ST	F126–EGU	F126–NEGU	Total
DC	207	26	233
DE	4,306	232	4,538
IN	7,088	82	7,170
KY	19,654	53	19,707
MD	14,519	1,013	15,532
MI	25,689	2,166	27,855
NC	31,212	2,329	33,541
NJ	9,716	4,838	14,554
NY	16,081	156	16,237
OH	45,432	4,103	49,535
PA	47,224	3,619	50,843
VA	17,091	4,104	21,195
WV	26,859	2,184	29,043
Total	265,078	24,905	289,983

APPENDIX D TO PART 97—FINAL SECTION 126 RULE: STATE COMPLIANCE SUPPLEMENT POOLS FOR THE SECTION 126 FINAL RULE (TONS)

State	Compliance supplement pool
Delaware	168
District of Columbia	0
Indiana	2,454
Kentucky	7,314
Maryland	3,882
Michigan	9,398
New Jersey	1,550
New York	1,379
North Carolina	10,737
Ohio	22,301
Pennsylvania	15,763
Virginia	5,504
West Virginia	16,709
Total	97,159

PARTS 98–99 [RESERVED]